SYSTRON DONNER
A THORN EMI company

1702

SYSTRON DONNER
Member THORN EMI Group

1702

INSTRUMENT DIVISION

SIGNAL GENERATOR

DOCUMENT NO. 120007-01

Includes revisions from Calibration Addendum 2-89.

OPERATING AND SERVICE MANUAL

2727 Systron Drive • Concord, California 94518 • U.S.A.
Tel: (415) 676-5000 • TWX: 910-481-9479 • Cable: SYSTRON DONNER
FSCM No. 52542

Copyright © 1982 Systron Donner
Printed in U.S.A.

SYSTRON DONNER
INSTRUMENT DIVISION
2727 Systron Drive
Concord, California 94518

WARRANTY POLICY

I Warranty

Systron Donner Instrument Division warrants that at the time of shipment the products manufactured by Systron Donner and sold hereunder will be free from defects in material and workmanship and will conform to the current specifications published by Systron Donner's Instrument Division.

II Warranty

A The warranty period will be one year from the date of shipment. This warranty is extended only to the original buyer.

III Warranty Adjustments

A. If any defect within this warranty appears, Purchaser shall notify Seller immediately.

B Systron Donner agrees to repair or furnish a replacement for, but not install, any product which within the standard warranty shall, upon test and examination by Systron Donner, prove defective within the above warranty period.

C No product will be accepted for return or replacement without prior approval of Systron Donner. Upon such authorization and in accordance with instructions of Systron Donner, the product will be returned to the manufacturing location, shipping charges prepaid by Purchaser.

IV Exclusions from Warranty

A The foregoing warranty is in lieu of and excludes all other expressed or implied warranties of merchantability or fitness or otherwise.

B Systron Donner will not be liable for any special or consequential damages or for loss, damages or expense directly or indirectly arising from the use of the products, or any inability to use them either separately or in combination with any other equipment or material, or from any other cause.

C The warranty does not extend to any product manufactured by Systron Donner which has been subjected to misuse, neglect, accident, improper installation or to use in violation of instructions furnished by Systron Donner.

D The warranty does not extend to or apply to any unit which has been repaired or altered at any place other than Systron Donner; by persons not expressly approved by Systron Donner; not to any unit, the serial number of which has been removed or defaced or Changed.

E This warranty applies to new equipment only and will cover repaired or replacement items only to the extent of the balance remaining of the items original warranty period noted in Paragraph II.

F All freight charges will be paid for by the Purchaser.

June, 1985

SYSTRON DONNER
Member THORN EMI Group

INSTRUMENT
DIVISION

2727 Systron Drive, Concord, CA 94518
Phone (415) 676-5000
TWX 910-481-9479

PROPRIETARY RIGHTS STATEMENT

The design information contained herein is the sole property of Systron Donner. The disclosure of this information does not constitute the release of proprietary rights thereof, but is to be used for informational purposes only. Permission to reproduce this information of the product described herein must be obtained in writing from Systron Donner.

Copyright © 1982 Systron Donner
Printed in U.S.A.

LIST OF EFFECTIVE PAGES

(Revision/Configuration Control Document)

The 1702 Signal Generator Operating and Service Manual is a revision/ configuration controlled document. Original pages are date coded 1702/3/78 (reflecting a March 1978 issue date); pages changed in the future will be indicated according to respective revision date(s).

Insert change pages, destroy superseded pages.

Total number of pages in this publication is 338, consisting of the following:

Page No.	Issue Date	Page No.	Issue Date	
Title		4-57/58 blank	02/83	
Blank		4-59/60 blank	02/83	
Warranty	1985	4-61 - 4-68	07/80	
Blank		4-69/70 blank	02/83	
Proprietary Rights Statement	1982	4-71.	07/80	
Blank		5-1 - 5-3	07/80	2-89
List of Effective Pages - A .	12/88	5-4	03/78	2-89
B Blank		5-5 - 5-6	07/80	2-89
Table of Contents iii - viii.	04/84	5-7 - 5-8	03/78	2-89
1-1 - 1-2	01/82	5-9	08/78	2-89
1-3 - 1-5/6 blank	12/88	5-10 - 5-12	03/78	
2-1 - 2-4	01/82	5-14.	08/78	
3-1 - 3-2	07/80	5-15.	06/79	
3-3	03/78	5-16.	05/80	
3-4 - 3-8	07/80	5-17.	07/80	
3-9	03/78	5-18.	05/80	
3-10.	07/79	5-19 - 5-20	07/80	
3-11.	07/80	5-21 - 5-23	07/80	
3-12.	03/78	5-24.	05/80	
3-13.	07/80	5-25 - 5-26	06/79	
3-14.	03/78	5-37 - 5-38	07/80	
3-15 - 3-16	07/80	5-39 - 5-52	11/81	
4-1 - 4-2	07/80	6-1 - 6-56.	04/84	
4-3/4 blank	02/83	6-57 - 6-58	12/88	
4-5 - 4-7	03/78	6-59 - 6-64	04/84	
4-8	07/80	6-65 - 6-67	12/88	
4-9	03/78	6-68.	04/84	
4-10 - 4-14	07/80	6-69.	12/88	
4-15/16 blank	02/83	6-70 - 6-83	04/84	
4-17 - 4-24	02/83	6-84.	12/88	
4-25/26 blank	02/83	6-85 - 6-104.	04/84	
4-27 - 4-33	07/80	7-1 - 7-2	11/84	
4-34.	02/82	7-3 - 7-27.	02/83	
4-35/36 blank	02/83	7-28 - 7-29	12/88	
4-35a	02/82	7-30 - 7-49	02/83	
4-36 - 4-40	07/80	7-50 - 7-51	12/88	
4-41/42 blank	02/83	7-52 - 7-59	02/83	
4-43 - 4-46	07/80	7-60 - 7-61	12/88	
4-47/48 blank	02/83	7-62 blank		
4-49 - 4-56	07/80	7-63 - 7-77/78 blank. . . .	02/83	

TABLE OF CONTENTS

CHAPTER		PAGE
1 - GENERAL INFORMATION		
1.1	Introduction	1-1
1.2	Description	1-1
1.3	Specifications	1-1
1.4	Options	1-4
CHAPTER 2 - INSTALLATION		
2.1	Introduction	2-1
2.2	Incoming Receiving Inspection	2-1
2.3	Installation Considerations	2-1
2.4	Power Requirements and Initial Turn-On	2-1
2.5	Incoming Confidence Check	2-2
2.6	IEEE Installation and Interface Consideration	2-3
2.7	Preparation for Reshipment	2-4
CHAPTER 3 - OPERATION		
3.1	Introduction	3-1
3.2	Front Panel Controls, Indicators and Connectors	3-1
3.3	Rear Panel Controls and Connectors	3-4
3.4	Basic Operating Procedures	3-6
3.4.1	FM Mode Operating Procedures	3-6
3.4.2	AM Mode Operating Procedures	3-6
3.4.3	CW Mode Operating Procedures	3-6
3.5	IEEE GPIB Operational Procedures	3-7
3.5.1	IEEE Subsets Implemented	3-7
3.5.2	GPIB Characterisitcs	3-7
3.5.3	Address Assignment Procedure	3-8
3.5.4	IEEE Multiline Interface Messages	3-9
3.5.5	GPIB Frequency Selection Data Entry Procedure	3-10
3.5.6	Status Reporting	3-11
3 - OPERATION (Cont'd)		
3.5.7	GPIB Mode Selection Data Entry Procedure	3-11
3.5.8	GPIB Output Level Selection Data Entry Procedure	3-11
3.5.9	GPIB Program Example	3-13
3.5.10	GPIB Instrumentation System Capabilities	3-15
4 - PRINCIPLES OF OPERATION		
4.1	Introduction	4-1
4.2	Functional Description	4-1
4.3	Synthesizer Assembly Functional Description	4-13
4.4	Synthesizer Detailed Circuit Descriptions	4-17
4.4.1	AC Discriminator PCB Assembly A4A1	4-17
4.4.2	10 MHz VCO PCB Assembly A4A2	4-18
4.4.3	Source 2 PCB Assembly A4A5	4-18
4.4.4	Source 3 PCB Assembly A4A6	4-19
4.4.5	Source 4 PCB Assembly A4A11	4-21
4.4.6	Source 5 PCB Assembly A4A13	4-22
4.4.7	Control Logic PCB Assembly A4A9	4-24
4.4.8	Divide-By-N PCB Assembly A4A10	4-27
4.4.9	400 MHz Reference Generator PCB Assembly A4A8	4-29
4.4.10	Phase Detector PCB Assembly A4A12	4-30
4.4.11	Mixer PCB Assembly A4A16	4-31
4.4.12	Amplifier PCB Assembly A4A14	4-31
4.4.13	Time Base Generator PCB Assembly A4A4	4-33
4.4.14	DC Discriminator PCB Assembly A4A3	4-34
4.5	Detailed Circuit Descriptions	4-35a

TABLE OF CONTENTS

CHAPTER — PAGE

1 - GENERAL INFORMATION

4.5.1 Frequency Switch Assembly A3A1 . . . . . 4-35a
4.5.2 Display Assembly A3A2 . 4-35a
4.5.3 Modulation Control Assembly A3A3 4-37
4.5.4 Clock Oscillator PCB Assembly A5 4-38
4.5.5 Frequency Control PCB Assembly A3A4 4-39
4.5.5.1 Input/Output Interface Logic 4-44
4.5.5.2 Handshake Logic 4-46
4.5.5.3 Programming Logic . . . 4-54
4.5.6 Source 2 PCB Assembly A4A5 4-61
4.5.7 Amplitude Control PCB Assembly A3A5 4-63

5 - MAINTENANCE AND CALIBRATION

5.1 Introduction 5-1
5.2 Calibration and Test Equipment 5-1
5.3 Reference Oscillator Calibration Procedure . 5-1
5.4 Internal Adjustment Location 5-3
5.5 Test and Alignment Procedure 5-3
5.6 Option 07 A3A5 Test and Alignment Procedure . . 5-13
5.7 A4 Assemblies Test and Alignment Procedures . 5-15
5.7.1 A4A2 and A4A3, Test and Alignment Procedure . . 5-16
5.7.2 A4A1 Test and Alignment Procedure 5-18
5.7.3 A4A4 Test and Alignment Procedure 5-19
5.7.4 A4A5 Test and Alignment Procedure 5-20
5.7.5 Option 06/07 Source 2 Test and Alignment Procedure 5-22
5.7.6 A4A6 Test and Alignment Procedure 5-24

5 - MAINTENANCE AND CALIBRATION (Cont'd)

5.7.7 A4A8 Test and Alignment Procedure 5-24
5.7.8 A4A9 Test and Alignment Procedure 5-26
5.7.9 A4A10 Test and Alignment Procedure 5-27
5.7.10 A4A11 Test and Alignment Procedure 5-28
5.7.11 A4A13 Test and Alignment Procedure 5-30
5.7.12 A4A12 Test and Alignment Procedure 5-33
5.7.13 A4A14 Test and Alignment Procedure 5-34
5.8 Integrated Circuit Component Data 5-37

6 - PARTS LISTS

6.1 Introduction 6-1
6.2 Part Ordering Information 6-1
6.3 Parts List 6-1
Final Assembly 6-6
Test Assembly 6-7
Bottom Cover Assembly . . 6-9
Front Panel Assembly . . . 6-10
A2 Power Supply Chassis Assembly 6-11
A2A1 Power Supply Regulator Assembly 6-12
A2A3A1 +5 V Regulator PC Assembly 6-13
A2A1A2 -5.2 V Regulator PC Assembly 6-14
A2A2 Rectifier PC Assembly 6-15
A3 Motherboard PC Assembly 6-16
A3A1 Switch PC Assembly . 6-19
A3A2 Display PC Assembly . 6-20
A3A3 Mod Control PC Assembly 6-22
A4 Synthesizer Assembly . 6-26
A4A1 AC Discriminator PC Assembly 6-27

TABLE OF CONTENTS

CHAPTER	PAGE
6 - PARTS LISTS (Cont'd)	
A4A2 10 MHz VCO PC Assembly	6-30
A4A3 DC Discriminator PC Assembly	6-35
A4A4 Time Base PC Assembly	6-39
A4A5 Source 2 PC Assembly	6-41
A4A6 Source 3 PC Assembly	6-44
A4A8 400 MHz Reference PC Assembly	6-48
A4A9 Control Logic PC Assembly	6-52
A4A10 Divide-By-N PC Assembly	6-54
A4A11 Source 4 PC Assembly	6-57
A4A12 Phase Detector PC Assembly	6-61
A4A13 Source 5 PC Assembly	6-65
A4A14 Amplifier PC Assembly	6-70
A4A15 Synthesizer Motherboard Assembly	6-76
A4A16 Mixer PC Assembly	6-78
A4A17 Connector PC Assembly	6-79
A5 Atd Clock Oscillator Assembly	6-80
A5A1 Std Oscillator Control PC Assembly	6-81
A5 Opt 01 High Stability Oscillator Assembly	6-83
A5A1 Opt 01 High Stability Osc Control PC Assembly	6-84
A5 Opt 02 TCXO Oscillator Chassis Assembly	6-86
A5A1 Opt 02 TCXO Oscillator Control PC Assembly	6-87
Option 06 IEEE Frequency Control Assembly	6-89
Option 07 IEEE Frequency and Amplitude Assembly	6-90
A3A4 Frequency Control PC Assembly	6-91
A3A5 Amplitude Control PC Assembly	6-96
A4A5 Opt 06/07 Source 2 PC Assembly	6-102

CHAPTER	PAGE
7 - DRAWINGS	
7.1 Introduction	7-1

LIST OF FIGURES

FIGURE		PAGE
3-1	Model 1702 Front Panel	3-3
3-2	Model 1702 Rear Panel	3-5
3-3	Typical Instrumentation System	3-15
4-1	Functional Block Diagram	4-3
4-2	Signal Generation Process Functional Block Diagram	4-15
4-3	Source 2 Functional Block Diagram	4-19
4-4	Source 3 Functional Block Diagram	4-20
4-5	Source 4 Functional Block Diagram	4-21
4-6	Source 5 Functional Block Diagram	4-23
4-7	Control Logic Assembly Functional Block Diagram	4-25
4-8	Divide-By-N Assembly Functional Block Diagram	4-28
4-9	400 MHz Reference Generator Functional Block Diagram	4-29
4-10	Phase Detector Assembly Functional Block Diagram	4-31
4-11	Amplifier Assembly Functional Block Diagram	4-32
4-12	Time Base Generator Assembly Logic Diagram	4-35
4-13	Digit Select Timing Diagram	4-36
4-14	A3A4 Functional and Interface Block Diagram	4-41
4-15	Interface Logic Diagram	4-47
4-16	Handshake Logic Diagram	4-57
4-17	Programming Logic Diagram	4-59
4-18	Source 2 Option 06/07 Functional Block Diagram	4-62

TABLE OF CONTENTS

LIST OF FIGURES (Cont'd)

FIGURE		PAGE
4-19	Option 07, A3A5 Functional Logic Diagram	4-69
5-1	Reference Oscillator Calibration Periods	5-2
5-2A	Adjustment Location Diagram Top View	5-11
5-2B	Adjustment Location Diagram Bottom View	5-12
5-3	Option 07, A3A5 Test Point and Adjustment Location Diagram	5-13
5-4	A4A2 10 MHz VCO Simplified Block Diagram	5-17
5-5	A4A3 DC Discriminator Simplified Block Diagram	5-17
5-6	A4A1 AC Discriminator Simplified Block Diagram	5-19
5-7	A4A4 Time Base Simplified Block Diagram	5-20
5-8	A4A5 Source 2 Simplified Block Diagram	5-22
5-9	Option 06/07 A4A5 Source 2 Simplified Block Diagram	5-23
5-10	A4A6 Source 3 Simplified Block Diagram	5-24
5-11	A4A8 400 MHz Ref Generator Simplified Block Diagram	5-25
5-12	A4A9 Logic Control Simplified Block Diagram	5-26
5-13	A4A10 Divide-By-N Simplified Block Diagram	5-28
5-14	A4A11 Source 4 Simplified Block Diagram	5-30
5-15	A4A13 Source 5 Simplified Block Diagram	5-32
5-16	A4A12 Phase Detector Simplified Block Diagram	5-35
5-17	A4A14 Amplifier Simplified Block Diagram	5-36
7-1A	Test Assembly	7-3
7-1B	Test Assembly	7-4
7-2	Bottom Cover Assembly	7-5
7-3	A1A1 Front Panel Assembly	7-7
7-4	A2A1 Power Supply Sub-Assembly	7-8
7-5	A2A2 Rectifier PCB Assembly	7-9

LIST OF FIGURES (Cont'd)

FIGURE		PAGE
7-6	A2A3 Power Regulator Plug-In Assembly	7-10
7-7	A2 Power Supply Schematic	7-11
7-8	A3 Motherboard PCB Assembly	7-12
7-9	A3 Motherboard PCB Schematic	7-13
7-10	A3A1 Frequency Switch PCB Assembly	7-14
7-11	A3A1 Frequency Switch PCB Schematic	7-15
7-12	A3A2 Display PCB Assembly	7-16
7-13	A3A2 Display PCB Schematic	7-17
7-14	A3A3 Modulation Control PCB Assembly	7-18
7-15	A3A3 Modulation Control PCB Schematic	7-19
7-16A	A4 Synthesizer Assembly	7-20
7-16B	A4 Synthesizer Assembly	7-21
7-16C	A4 Synthesizer Assembly	7-22
7-17	A4A17 Synthesizer Connection PCB Assembly	7-23
7-18	A4A15 Synthesizer Motherboard PCB Assembly	7-24
7-19	A4A15 Synthesizer Motherboard PCB Schematic	7-25
7-20	A4A1 AC Discriminator PCB Assembly	7-26
7-21	A4A1 AC Discriminator PCB Schematic	7-27
7-22	A4A2 10 MHz VCO PCB Assembly	7-28
7-23	A4A2 10 MHz VCO PCB Schematic	7-29
7-24	A4A3 DC Discriminator PCB Assembly	7-30
7-25	A4A3 DC Discriminator PCB Schematic	7-31
7-26	A4A4 Time Base Divider PCB Assembly	7-32
7-27	A4A4 Time Base Divider PCB Schematic	7-33
7-28	A4A5 Source 2 PCB Assembly	7-34
7-29	A4A5 Source 2 PCB Schematic	7-35
7-30	A4A6 Source 3 PCB Assembly	7-36

TABLE OF CONTENTS

LIST OF FIGURES (Cont'd)

FIGURE		PAGE
7-31	A4A6 Source 3 PCB Schematic	7-37
7-32	A4A8 400 MHz Reference Generator PCB Assembly	7-38
7-33	A4A8 400 MHz Reference Generator PCB Schematic	7-39
7-34	A4A9 Logic PCB Assembly	7-40
7-35	A4A9 Logic PCB Schematic	7-41
7-36	A4A10 Divide-By-N PCB Assembly	7-42
7-37	A4A10 Divide-By-N PCB Schematic	7-43
7-38	A4A11 Source 4 PCB Assembly	7-44
7-39	A4A11 Source 4 PCB Schematic	7-45
7-40	A4A12 Phase Detector PCB Assembly	7-46
7-41	A4A12 Phase Detector PCB Schematic	7-47
7-42	A4A13 Source 5 PCB Assembly	7-48
7-43	A4A13 Source 5 PCB Schematic	7-49
7-44	A4A14 Amplifier PCB Assembly	7-50
7-45	A4A14 Amplifier PCB Schematic	7-51
7-46	A4A16 Mixer PCB Assembly	7-52
7-47	A4A16 Mixer PCB Schematic	7-53
7-48	A5 Std Clock Oscillator PCB Assembly	7-55
7-49	A5A1 Std Oscillator Control PCB Assembly	7-56
7-50	A5A1 Std Oscillator Control PCB Schematic	7-57
7-51	A5 Opt 01, Clock Oscillator Assembly	7-59
7-52	A5A1 Opt 01, Oscillator Control PCB Assembly	7-60
7-53	A5A1 Opt 01, Oscillator Control PCB Schematic	7-61
7-54	A5 Opt 02 Clock Oscillator Assembly	7-63
7-55	A5A1 Opt 02, Oscillator Control PCB Assembly	7-64
7-56	A5A1 Opt 02, Oscillator Control PCB Schematic	7-65
7-57	Option 06 Remote Frequency Control Installation	7-67
7-58	A3A4 Opt 06 Remote Frequency Control PCB Assembly	7-68
7-59A	A3A4 Opt 06 Remote Frequency Control PCB Schematic	7-69
7-59B	A3A4 Opt 06 Remote Frequency Control PCB Schematic	7-70
7-59C	A3A4 Opt 06 Remote Frequency Control PCB Schematic	7-71
7-60	A3A5 Opt 07 Remote Amplitude Control PCB Assembly	7-72
7-61A	A3A5 Opt 07 Remote Amplitude Control PCB Schematic	7-73
7-61B	A3A5 Opt 07 Remote Amplitude Control PCB Schematic	7-75
7-62	A4A5 Opt 06/07 Source 2 PCB Assembly	7-76
7-63	A4A5 Opt 06/07 Source 2 PCB Schematic	7-77

LIST OF TABLES

TABLE		PAGE
1-1	Specifications	1-2
1-2	Standard Options	1-4
2-1	A2A1P1 Plug Configurations	2-2
2-2	GPIB Interface Connector	2-4
3-1	Front Panel Controls, Indicators and Connectors	3-1
3-2	Rear Panel Controls and Connectors	3-4
3-3	IEEE-488 PROG Connector	3-8
3-4	Talk/Listen Assignments vs ASCII Character	3-9
3-5	IEEE STD-488 DIO Code to ASCII Character	3-9
3-6	Frequency Address Characters	3-10
3-7	Mode Selection Format	3-11
3-8	Level Address Characters	3-11

LIST OF TABLES (Cont'd)

TABLE		PAGE
4-1	Model 1702 Assemblies . . .	4-1
4-2	Synthesizer A4 Interface .	4-2
4-3	Frequency Switch PCB Assembly A3A1 Interface	4-5
4-4	Display PCB Assembly A3A1 Interface	4-5
4-5	Modulation Control PCB Assembly A3A3 Interface . .	4-6
4-6	Frequency Control PCB Assembly A3A4 Interface . .	4-7
4-7	Amplitude Control PCB Assembly A3A5 Interface . .	4-8
4-8	A2A1P1 Plug Configuration .	4-12
4-9	Regulator Power Supply Components	4-13
4-10	Logic Assembly Output Control Signals	4-24
4-11	IEEE PROG Connector	4-44
4-12	DI Bits Decoding Truth Table	4-44
4-13	USASCII Format	4-45

LIST OF TABLES (Cont'd)

TABLE		PAGE
4-14	Talk/Listen Address Assignments vs ASCII Character. .	4-46
4-15	Status Report Message Unit Format	4-53
4-16	Programming Control Signal.	4-54
4-17	U26 Decoder Truth Table . .	4-64
4-18	U16 NBCD Adder Truth Table.	4-65
4-19	U17 NBCD Adder Truth Table.	4-65
4-20	U14 NBCD Adder Truth Table.	4-66
4-21	PROM U11 Program Content .	4-67
4-22	PROM U15 Program Content .	4-67
4-23	PROM U24 Program Content .	4-68
4-24	PROM U25 Program Content .	4-68
5-1	Recommended Test Equipment.	5-1
5-2	Integrated Circuit Data Sheets	5-37
6-1	Parts Lists Location . . .	6-2
6-2	Manufacturer's Code-To-Name Index	6-3
7-1	List of Schematic and Component Location Diagrams. .	7-1

CHAPTER 1

GENERAL INFORMATION

1.1 INTRODUCTION

This manual contains information pertinent to installation, operation, testing, adjusting, and servicing the Systron-Donner Model 1702 Signal Generator.

1.2 DESCRIPTION

The Model 1702 is a frequency synthesizer that generates fundamental (non-harmonic) signals from 100 Hz to 999.9999 MHz in discrete 100 Hz steps. Selection of AM and FM modulation of the output is provided either by an internal 1 kHz source or by an external dc to 20 kHz source. The internal and external modulation features may be used simultaneously as well as the AM and FM modes. The internal 1 kHz modulation source is available as a Front Panel BNC output. This feature provides many uses, including modulation drive for a FM transmitter when adjusting frequency deviation. A CW mode is also provided to allow generation of an unmodulated carrier.

The Signal Generator's output is continuously variable from 0.1 μV to 1 Vrms (-127 to +13 dBm) by a Front Panel 20 dB vernier control and six step attenuator. The Signal Generator's output is protected against input/output overloads of over ±10 V peak, with Front Panel reset.

Options 06 and 07 allow IEEE-488 General Purpose Interface Bus (GPIB) control of the frequency selection, mode selection, output level, step attenuator, selection and status reporting for systems integration. Information pertaining to the IEEE STD-488 GPIB as it relates to the Model 1702 is found in various chapters of this manual.

The Signal Generator is normally referenced to an internal 1 MHz oscillator having a stability of 7×10^{-9} parts per day, or the high stability optional internal reference oscillator having a 3×10^{-9} parts per day stability. On the Rear Panel, one BNC connector allows monitoring of the 1 MHz reference, while another BNC (EXT CLOCK IN) provides for inputs of external 1, 2, 5 or 10 MHz sources from a frequency standard.

1.3 SPECIFICATIONS

Instrument specifications for the Model 1702 are listed in Table 1-1. These specifications are the performance standards, or limits against which the instrument may be tested.

TABLE 1-1 SPECIFICATIONS

FREQUENCY CHARACTERISTICS

Range: 100 Hz to 999.9999 MHz

Resolution: 100 Hz steps

Display: 7-digits individually selected

Accuracy: Equal to accuracy of reference time base oscillator

RF OUTPUT (Leveled into 50 ohms)

Range: 0.1 µV to 1 Vrms (-127 to +13 dBm)

Flatness (at 0.1 V, -20 db step and 25°C):[1]

RANGE	TYPICAL	GUARANTEED
100 kHz to 250 MHz	±0.5 dB	±1.0 dB
250 MHz to 550 MHz	±0.7 dB	±1.5 dB
550 MHz to 1 GHz	±1.0 dB	±2.0 dB

Incremental Attenuator Accuracy:[2]

RANGE	STEPS 0 dB	STEPS 20, 40 60, 80 dB	STEPS 100, 120 dB
100 kHz to 550 MHz	Uncalibrated	±1.0 dB	±1.5 dB
550 MHz to 1 GHz	Uncalibrated	±1.5 dB	±2.0 dB

Temperature Variance: ±0.5 dB additional, 0 to 50°C

SPECTRAL PURITY CHARACTERISTICS

Harmonics: ≤-25 dBc

Non-Harmonic (Spurious)
100 kHz to 110 MHz: ≤-40 dBc
110 MHz to 950 MHz: ≤-50 dBc
950 MHz to 1 GHz: ≤-46 dBc

Noise:

Residual fm (.1 to 3 kHz bandwidth): ≤100 kHz to 500 MHz: ≤50 Hz rms
≤500 MHz to 1 GHz ≤100 Hz rms

Residual am (.1 to 3 kHz bandwidth): ≤.1% at +13 dBm

SSB Phase Noise (in 1 Hz bandwidth at 50 kHz offset):
100 kHz to 500 MHz: ≤103 dBc
500 MHz to 1 GHz ≤-97 dBc

Attenuator: 20 dB variable, 20 dB steps over 6 ranges.

Output Impedance: 50 ohms, nominal

Output Connector: Type N

Output Modes: AM, FM and CW

[1]Variance of output as a function of frequency at fixed output setting.
[2]Additional one-time inaccuracy when switching from range-to-range.

TABLE 1-1 SPECIFICATIONS (Cont'd)

AMPLITUDE MODULATION (AM) CHARACTERISTICS[note 4,5,6]

Range: 0 to 90% with output level vernier at +7 dBm and attenuator at -20 dB minimum step attenuation.

Rate: 0 to 10 kHz

Internal Rate: 1 kHz fixed

Pulse Response: ≤40 μs rise and fall

Display Accuracy: ±5 % of reading, ±5 % full scale

Resolution: 0.1%

External Input: 2 V peak for 100%

Connector: BNC

Impedance: 600 ohms

Modes: Internal, external or both simultaneously

Incidental FM at 30% AM, 1 kHz rate: f<500 MHz: 90 Hz
f≥500 MHz: 250Hz

Distortion at 1 kHz rate: a) at 30% modulation f<500 MHz: 1.2%
f≥500 MHz: 2%
b) at 70% modulation ≤3%
c) at 90% modulation ≤6%

FREQUENCY MODULATION (FM) CHARACTERISTICS[note 5,6]

Internal Rate: 1 kHz fixed

Deviation: 0 to 20 kHz peak

Rate: dc to 15 kHz

Pulse Response: ≤40 μs rise and fall

Display Accuracy: ±6% of reading, ±100 Hz

Resolution: 10 Hz

External Input: 2 V peak for 20 kHz peak deviation.

Connector: BNC

Impedance: 600 ohms

Distortion: a) at 20 kHz deviation, 1 kHz rate ≤1.2%
b) at 20 kHz deviation, 15 kHz rate ≤4%
c) at 10 kHz deviation, 15 kHz rate ≤6%

Incidental AM (at 20 kHz deviation, 1 kHz rate): ≤0.1%

Modes: Internal, external or both simultaneously.

Notes:

1. Variance of output as a function of frequency at fixed output setting.
2. Additional one-time inaccuracy when switching from range to range.
3. Levels relative to carrier.
4. Output level vernier at +7 dB setting with 20 dB minimum step attenuation.
5. Distortion of external modulation source should be subtracted from distortion measurement.
6. Measurement bandwidths should be 300 Hz - 3 kHz for 1 kHz rates, and
300 Hz - 120 kHz for 10 and 15 kHz rates.

TABLE 1-1 SPECIFICATIONS (Cont'd)
GENERAL CHARACTERISTICS

Time Base Aging Rate: ±7 parts in 10^9/day. 115/230 Vac rms operation is switch selectable.
External Reference Input: 1, 2, 5 and 10 MHz.

Warm-up: Allow 10 minutes for instrument and for time required to stabilize heated reference oscillator (if used). No warm-up for Option 02.

Internal 1 kHz Output:
a) Level: 0 to 2 V peak into 600 ohms
b) Distortion: ≤1%
c) Connector: BNC

Output Protector:
a) Trip: ≈10V peak ±dc and ac to 1000 MHz.
b) Reset: Pushbutton

RF Leakage: Will not increase IF output test point of a portable pager (0.2 μV sensitivity) by more than 1/2 dB when placed 12" (30.5 cm) in front of unit developing 0.5 μV output into a shielded termination.

Sweep Capability: ±20 kHz from selected frequency in FM mode with -2 to +2 V peak external FM MOD input.

Power: 100 to 125 Vac, 200 to 250 Vac rms, 48 to 420 Hz, 75 W maximum, 8-plug programmable ranges.

Display: Modulation (3-1/2 digit LED): AM in %, FM in kHz with LED annunciators.

Indicators (LED):
a) Lock: frequency
b) Level: RF output
c) Mode: AM, FM, CW
d) Remote: GPIB on line
e) Overload: Reverse Power Overload

Temperature:
a) Storage: -55° to +85°C (-67°F to 185°F)
b) Operating: -12° to +50°C (10°F to 122°F)

Weight: 40 lbs. (18.2 kg) net: 52 lbs (23.6 kg) shipping

Dimensions:
a) Height: 13.3 cm (5.25")
b) Width: 42.6 cm (16.75")
c) Depth: 47 cm (18.5")

1.4 OPTIONS

The options listed in Table 1-2 are the standard options available for the Model 1702 Signal Generator.

TABLE 1-2 STANDARD OPTIONS

OPTION	DESCRIPTION
01	High Stability Oscillator Aging Rate: ±3 x 10^{-9}/day. ±1.1 x 10^{-6}/year. Temperature Stability: -15° to +60°C ±2 x 10^{-10}/°C
02	TCXO Oscillator Aging Rate: ±1 x 10^{-6}/year on an exponential curve. Temperature Stability: -0 to +55°C ±5 x 10^{-7}
03	Relocation of the RF OUT "N" connector from the Front Panel to the Rear Panel and the addition of EXT MOD IN and 1 kHz OUT BNC connectors to the Rear Panel. Option 03, Rear Panel Signal connectors, allows the Model 1702 to be system integrated.
06	IEEE STD-488 GPIB to allow selection of the Model 1702 output frequency and status reporting. Requires the addition of the Rear Panel IEEE STD-488 PROG connector, and the IEEE-488/Frequency Control A3A4 #05784101. EXT MOD IN and 1 kHz OUT BNC connectors added to Rear Panel.
07	IEEE STD-488 GPIB to allow selection of the Model 1702 output frequency, modulation mode, output level and status reporting. Requires the addition of the Rear Panel IEEE STD-488 PROG connector, the IEEE-488/Frequency Control A3A4 #05784101, and Amplitude Control A3A5 #05797101. The standard Step Attenuator U1 is also replaced with a digital controlled Step Attenuator U1.

CHAPTER 2
INSTALLATION

2.1 INTRODUCTION

This chapter provides the information needed to install the Signal Generator. Included is information pertinent to initial inspection, power requirements, line voltage selection, power cables, interconnection, environment, instrument mounting, storage and shipment. The IEEE-488 GPIB (Options 06 and 07) installation and interface information is also provided to allow GPIB System integration.

2.2 INCOMING RECEIVING INSPECTION

Prior to accepting the Signal Generator from the shipper, inspect the condition of the shipping container for an indication of external freight damage. Any sign of such damage must be noted by both the shipper and the receiving customer, and should be reported to the carrier.

Immediately following removal of the Signal Generator from its shipping carton, inspect it for possible physical damage incurred during shipment. Should any damage be noted, notify your Systron-Donner representative -- DO NOT USE THE SIGNAL GENERATOR UNTIL INSTRUCTED TO DO SO BY THE REPRESENTATIVE.

2.3 INSTALLATION CONSIDERATIONS

The Model 1702 does not require forced air cooling and no internal blower is installed. Installation, however, should be such as to allow normal circulation of the flow of air around its external surfaces, especially the Rear Panel mounted heat sink. Access to the Rear Panel controls, connectors and adjustment ports require clearance, and if the Signal Generator is to be mounted, proper clearance for Rear Panel operation and cable routing must be considered.

2.4 POWER REQUIREMENTS AND INITIAL TURN-ON

The Model 1702 operates from 100, 115, 125, 200, 215, 230, 240 or 250 Vac ±10%, 48 to 420 Hz and requires 75 W. A standard three-conductor power cable which, when plugged into an appropriate power receptacle, grounds the chassis to protect operating personnel from certain electrical hazards. Whenever the power cable is mated to a two-conductor outlet, an adapter (properly installed) to provide grounding of the chassis will provide the same protection.

Check the local power source and configure the internal power supply jumper plug for the appropriate line voltage. Refer to Table 2-1 for the jumper plug connection configuration.

NOTE

If the Standard or High Stability Oscillator (Option 01) is installed in the Signal Generator, ensure that the 115/230 V switch located on the A5 Oscillator Chassis PC Assembly is placed in the appropriate position.

After ensuring that the proper fuse is installed in the Rear Panel fuse holder, connect the power cable between the Rear Panel ac power connector and the local power source. Press the Front Panel POWER pushbutton switch and verify that at least one of the LED annunciators illuminates.

NOTE

The Model 1702 is supplied with a 1.5 ampere Slo-Blo fuse (100 to 125 V operation). If 200 to 250 V operation is configured, the 1.5 ampere fuse should be replaced with a .75 ampere Slo-Blo fuse to adequately protect the Signal Generator.

TABLE 2-1 A2A1P1 PLUG CONFIGURATIONS

LINE VOLTAGE	JUMPER CONNECTIONS PINS	PINS	PART NUMBER	COLOR CODE
100	2-8	1-3-7	05767801	Brown
115	2-8	1-4-6	05767802	White
125	2-8	1-5-9	05767803	Red
200	1-7	3-8	05767804	Orange
215	1-7	6-8	05767808	Gray
230	1-4	6-8	05767805	Yellow
240	1-5	6-8	05767807	Violet
250	1-5	8-9	05767806	Green

2.5 INCOMING CONFIDENCE CHECK

Prior to packaging the Signal Generator for shipment, extensive operational, alignment and calibration procedures were performed by our test and QA departments.

To satisfy the electronic integrity of the Signal Generator at your receiving bench, the following incoming confidence check should be performed:

1. Perform the appropriate power application and initial turn-on procedures as outlined in paragraph 2.4.

2. Ensure that the Rear Panel EXT-CLOCK-INT slide switch is in its INT position.

3. Press the POWER pushbutton indicator (PBI) switch.

4. Set the OUTPUT LEVEL control to .5 V (+7 dBm) position and the STEP ATTENUATOR switch to .1 V (-20 dB) position. Connect an Oscilloscope to the RF OUT N connector to allow monitoring of the Signal Generator's output. Use a 50 Ω termination.

5. Press the MODULATION MODE FM PBI switch and verify that the FM-kHz, LOCK and LEVEL annunciators illuminate.

6. Place the MOD SOURCE switch to INT and "dial-up" a frequency that is within the bandwidth of the Oscilloscope on the 7-digit FREQUENCY-MHz switch.

7. Slowly rotate the INTERNAL MODULATION control from its fully CCW position (MIN), and verify that the Display indicates a deviation from 00.0 to at least 19.9. Verify an output signal on the Oscilloscope by selecting a 20 kHz rf output frequency and observing that frequency modulation occurs.

8. Press the MODULATION MODE AM PBI switch and verify that the AM-% LOCK and LEVEL annunciators illuminate.

9. Slowly rotate the INTERNAL MODULATION control from its fully CCW position to its fully CW position (MAX), and verify that the Display indicates a modulation percentage from at least 10 to 90%. Verify an output signal on the Oscilloscope having 1 kHz am that is adjustable from 10 to 90%.

10. Place the MOD SOURCE switch to EXT position. Connect a coax cable from the 1 kHz OUT BNC connector to the EXT MOD BNC connector. Press the MODULATION MODE FM PBI switch. Repeat steps 7 through 9 using the EXTERNAL MODULATION control in place of the INTERNAL MODULATION control.

11. Press the MODULATION MODE CW PBI. Verify an unmodulation continuous wave output on the Oscilloscope.

12. Disconnect the Scope from the RF OUT connector and connect a 1 GHz Frequency Counter to the RF OUT connector (drive the Frequency Counter's time base from the Model 1702's Rear Panel 1 MHz OUT BNC connector). Verify the output frequency for each of the following FREQUENCY-MHz switch settings:

010.0000	222.2222
101.1111	444.4444
110.0000	888.8888
999.9999	

2.6 IEEE STD-488 GPIB (Option 06 and 07) INSTALLATION AND INTERFACE CONSIDERATION

The GPIB permits operation of the Model 1702 Signal Generator from a data bus which conforms to IEEE Standard Digital Interface for Programmable Instruments - IEEE STD-488 1978.

To implement the GPIB, a 24-pin metric dimensioned connector and a 5-digit address selector switch is installed on the Rear Panel of the Signal Generator.

Refer to Chapter 3 of this manual for detailed information of the GPIB interface operation. Table 2-2 provides the pin designations for the Rear Panel GPIB 24-pin connector.

TABLE 2-2 GPIB INTERFACE CONNECTOR

PIN NUMBER	IEEE STD-488 MNEMONIC	PIN NUMBER	IEEE STD-488 MNEMONIC
1	DI01	13	DI05
2	DI02	14	DI06
3	DI03	15	DI07
4	DI04	16	DI08 (Inactive)
5	EOI (Inactive)	17	REN
6	DAV	18	GND (Return)
7	NRFD	19	GND (Return)
8	NDAC	20	GND (Return)
9	IFC	21	GND (Return)
10	SRQ (Inactive)	22	GND (Return)
11	ATN	23	GND (Return)
12	GND (Shield)	24	GND (Logic)

2.7 PREPARATION FOR RESHIPMENT

When the Signal Generator is to be repackaged for shipment, use the original packing materials, package in accordance with MIL-P-116 and MIL-E-17555E specifications or repackage using the following general instructions.

1. Attach a tag to the Signal Generator indicating the model number, serial number, name and address of the owner, and a summary of the service or repairs required.

2. Wrap the Signal Generator in heavy paper or plastic prior to placing it into the shipping container.

3. Select a strong carton or wooden box as a shipping container.

4. Use an adequate layer of shock-absorbing material on all sides of the unit and protect the Front Panel with additional layers of cardboard. Ensure that there is no movement of the assembly within the container.

5. Seal the package with strong tape or metal bands.

6. Mark the shipping container *"FRAGILE - DELICATE INSTRUMENT"* and place handling symbols to ensure proper handling.

7. Be certain that all correspondence refers to full nomenclature (model and serial number).

CHAPTER 3
OPERATION

3.1 INTRODUCTION

This chapter describes the general operation of the Model 1702 Signal Generator. The Front and Rear Panel controls, indicators and connectors are depicted and described as to their function and effect on the Signal Generator's operation. The procedures for IEEE STD-488 GPIB remote operation are also provided.

3.2 FRONT PANEL CONTROLS, INDICATORS AND CONNECTORS

Figure 3-1 depicts the Front Panel of the Model 1702. Table 3-1 describes these controls, indicators and connectors as to their function and operational use.

TABLE 3-1 FRONT PANEL CONTROLS, INDICATORS AND CONNECTORS

INDEX NUMBER	CONTROL, INDICATOR OR CONNECTOR	FUNCTION
1	AM-% annunciator	An LED annunciator that illuminates when the AM mode is selected. Indicates that the 3-1/2 digit display reads % of AM.
2	CW annunciator	An LED annunciator that illuminates when the CW mode is selected.
3	FM-kHz annunciator	An LED annunciator that illuminates when the FM mode is selected. Indicates that the 3-1/2 digit display reads deviation in kHz of the FM.
4	MODULATION 3-1/2 digit display	A 3-1/2 digit LED numeral display that indicates the % of AM or the FM deviation in kHz.
5	LOCK annunciator	An LED annunciator that illuminates when the Synthesizer is phase locked to the selected frequency.
6	REMOTE annunciator	An LED annunciator that illuminates when the Signal Generator is operating under remote control via the IEEE STD-488 GPIB Options 06 and 07.
7	LEVEL annunciator	An LED annunciator that illuminates when the rf output is properly leveled. The LED will extinguish if amplitude over-modulation is present or the RF output protector has tripped.
8	FREQUENCY-MHz selector indicator switch	A 7-digit selector-indicator switch that provides the selection and readout of the Synthesizer frequency from 100 Hz to 999.9999 MHz in 100 Hz steps.

TABLE 3-1 FRONT PANEL CONTROLS, INDICATORS AND CONNECTORS (Cont'd)

INDEX NUMBER	CONTROL, INDICATOR OR CONNECTOR	FUNCTION
9	ATTENUATOR V-dB selector switch	A six step attenuator switch that provides 120 dB of attenuation in six 20 dB steps of the signal at the RF OUT connector.
10	OUTPUT LEVEL control	A potentiometer that provides variable adjustment of the RF output level. The dial is calibrated to provide setting of the output level in volts rms or dBm when used in conjunction with the ATTENUATOR switch.
11	MODULATION INTERNAL control	A potentiometer that controls the internal 1 kHz modulation level. Will adjust the AM from 0% to 90%, and the FM deviation from 0 to 20 kHz.
12	1 kHz OUT connector	A BNC connector that supplies the 1 kHz internal modulation signal as an output. This output is adjustable by the MODULATION INTERNAL control from 0 to 2 V peak into a 50 Ω load.
13	MOD SOURCE INT-BOTH-EXT selector switch	A 3-position slide switch that allows the selection of the modulation source from the internal 1 kHz, the external dc to 15 kHz source or both, simultaneously.
14	MODULATION EXTERNAL control	A potentiometer that controls the external dc to 15 kHz modulation level. Will adjust the AM from 0% to 90%, and the FM deviation from 0 to 20 kHz.
15	EXT MOD connector	A BNC connector that accepts the dc to 20 kHz external modulation signal, will provide 90% AM or 20 kHz FM deviation with a 2 V peak amplitude.
16	POWER pushbutton indicator (PBI) switch	An alternate action PBI switch that allows for the turn-on and turn-off of the Signal Generator's line power. Shows blue when power is on.
17	MODULATION MODE FM pushbutton indicator (PBI) switch	An interlocked action switch that allows the selection of the FM mode of operation. Shows blue when FM mode is enabled.
18	MODULATION MODE CW pushbutton indicator (PBI) switch)	An interlocked action switch that allows the selection of the CW mode of operation. Shows blue when the CW mode is enabled.
19	MODULATION MODE AM pushbutton indicator (PBI) switch	An interlocked action switch that allows the selection of the AM mode of operation. Shows blue when the AM mode is enabled.

TABLE 3-1 FRONT PANEL CONTROLS, INDICATORS AND CONNECTORS (Cont'd)

INDEX NUMBER	CONTROL, INDICATOR OR CONNECTOR	FUNCTION
20	RF OUT connector	A type N connector that supplies a 0.1 µV to 1 Vrms RF output into a 50 Ω load.
21	OVERLOAD RESET pushbutton indicator (PBI) switch	A pushbutton indicator which resets the RF output protector circuit when depressed. Illuminates when the output protector circuits trips.

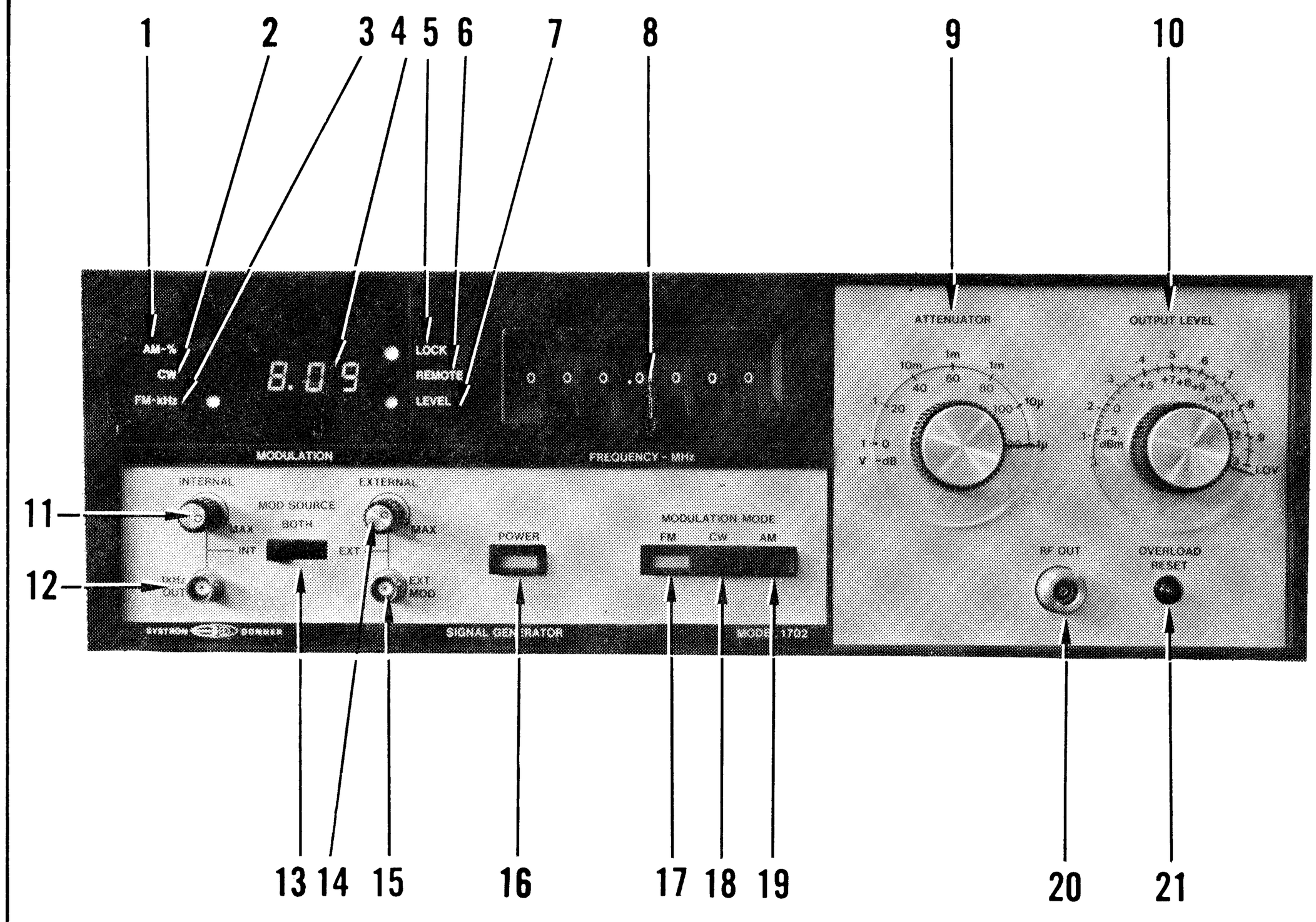

FIGURE 3-1 MODEL 1702 SIGNAL GENERATOR FRONT PANEL

3.3 REAR PANEL CONTROLS AND CONNECTORS

Figure 3-2 describes the functions and operational use of the mounted controls and connectors on the Rear Panel of the Model 1702.

TABLE 3-2 REAR PANEL CONTROLS AND CONNECTORS

INDEX NUMBER	CONTROL OR CONNECTOR	FUNCTION
1	EXT CLOCK INT switch	A two-position slide switch selects internal or external reference oscillator for the Signal Generator's time base.
2	EXT CLOCK IN connector	When the EXT CLOCK INT switch is placed in the EXT position, a BNC connector provides the input for an external frequency standard.
3	EXT CLOCK MHz 10 MHz 5 MHz 2 MHz 1 MHz	A four-position slide switch selects the proper divisor to count down the external clock to 1 MHz.
4	1 MHz OUT connector	A BNC connector provides a 1 MHz output.
5	100 to 250 Vrms, 48 to 65 Hz connector	A three pin receptacle provides for connection of the three conductor ac line
6	100 to 125 V 1.5 A SB 200 to 250 V .75 A SB fuse holder	A fuse holder containing a 1.5 A SB fuse (100 to 125 Vac) or a .75 A SB fuse (200 to 250 Vac).
7	IEEE 488 PROG connector	A 24-pin IEEE STD-488 connector provides GPIB interface for Options 06 and 07 remote control operation.
8	ADDRESS 1 5 0 1 4 0 1 3 0 1 2 0 1 1 0	A 5-digit switch selects the Signal Generator's IEEE STD-488 GPIB address when Options 06 and 07 are configured.
9	EXT MOD IN connector	A BNC connector accepts the dc to 20 kHz external modulation signal and provides 90% am or 20 kHz fm deviation with a 2 V peak amplitude. It is installed in parallel with the Front Panel EXT MOD connector when Option 03 is configured.

TABLE 3-2 REAR PANEL CONTROLS AND CONNECTORS (Cont'd)

INDEX NUMBER	CONTROL OR CONNECTOR	FUNCTION
10	1 kHz OUT connector	A BNC connector that supplies the 1 kHz internal modulation signal as an output. This output is adjustable by the MODULATION INTERNAL control from 0 to 2V peak into a 50Ω load. Is installed in parallel with the Front Panel 1 kHz OUT connector when Option 03 is configured.
11	RF OUT connector	A type N connector that supplies a 0.1 μV to 1 Vrms rf output into a 50 Ω load. Replaces the Front Panel RF OUT connector when Option 03 is configured.

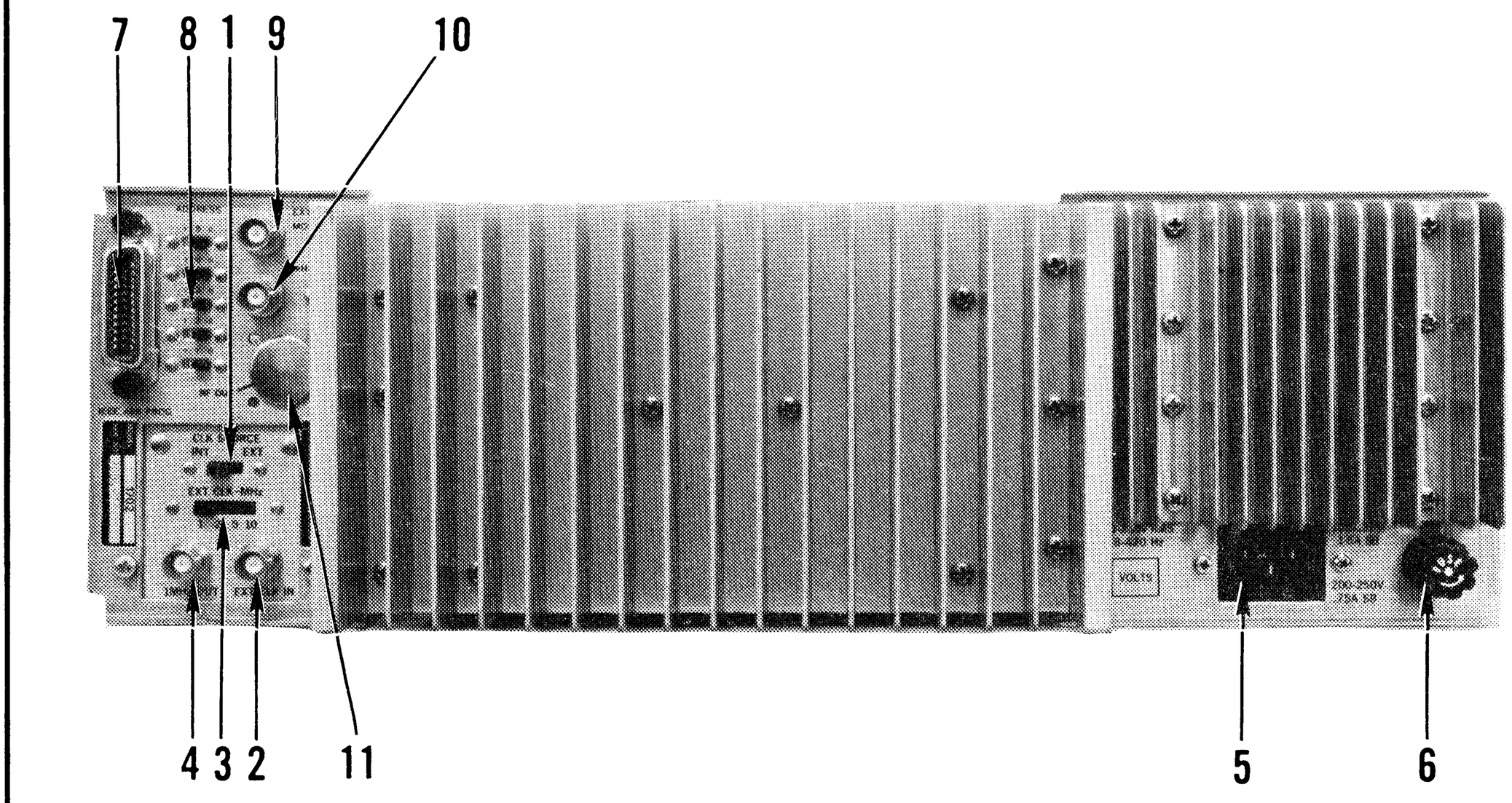

FIGURE 3-2 MODEL 1702 SIGNAL GENERATOR REAR PANEL

3.4 BASIC OPERATING PROCEDURES

The Model 1702 will generate an RF signal from 100 Hz to 999.9999 MHz at an output level of 0.1 µV to 1.0 Vrms (-127 dBm to +13 dBm) modulated either in amplitude and/or frequency or unmodulated (CW).

3.4.1 FM Mode Operating Procedures

To generate an FM signal having the desired frequency, modulation characteristics and output level proceed as follows:

1. Select the desired frequency on the 7-digit FREQUENCY-MHz selector switch. Verify that the LOCK annunciator illuminates.

2. Press the MODULATION MODE FM siwtch and verify the FM-kHz annunciator on the display is illuminated.

3. Select the desired modulation source(s) by use of the MOD SOURCE selector switch, (if external modulation is selected,apply a dc to 20 kHz, 0 to 2 V peak modulation signal to the EXT MOD BNC connector).

4. Adjust the INTERNAL and/or EXTERNAL modulation controls for the desired deviation as indicated on the 3-1/2 digit numerical display.

5. Select the desired output level by use of the ATTENUATOR and OUTPUT LEVEL controls and verify that the LEVEL annunciator on the display is illuminated.

3.4.2 AM Mode Operating Procedure

To generate an AM signal having the desired frequence, modulation characteristics and output level, proceed as follows:

1. Select the desired frequency on the 7-digit FREQUENCY-MHz selector switch. Verify that the LOCK annunciator illuminates.

2. Press the MODULATION MODE AM switch and verify that the AM-% annunciator on the display illuminates.

3. Select the desired modulation source(s) by use of the MOD SOURCE selector switch, (if external modulation is selected, apply a dc to 20 kHz, 0 to 2 V peak modulation signal to the EXT MOD BNC connector).

4. Adjust the INTERNAL and/or EXTERNAL modulation controls for the desired percentage (%) of modulation as indicated on the 3-1/2 digit numerical display.

5. Select the desired output level by use of the ATTENUATOR and OUTPUT LEVEL controls and verify that the LEVEL annunciator on the display is illuminated.

3.4.3 CW Mode Operating Procedure

To generate a CW signal having the desired frequency and output level, proceed as follows:

1. Press the MODULATION MODE CW switch.

2. Select the desired frequency on the 7-digit FREQUENCY-MHz selector switch. Verify that the LOCK annunciator illuminates.

3. Select the desired output level by use of the ATTENUATOR and OUTPUT LEVEL controls and verify that the LEVEL annunciator on the display is illuminated.

3.5 IEEE STD-488 GPIB OPERATIONAL PROCEDURES

The GPIB permits operation of the Signal Generator from a data bus which conforms to IEEE STD-488-1978. The functions controlled by the GPIB are Frequency selection when Option 06 is installed, and Frequency, Output Level, and Modulation Mode selection and Status Reporting when Option 07 is installed.

The Signal Generator may be used On Line or Off Line (Remote or Local). When in the Remote Mode (Signal Generator connected to the interface bus system and command to Remote), the Signal Generator may be programmed as to frequency selection, output level setting and modulation mode selection, by sending device dependent commands during the Signal Generators "Listen" mode of operation. Device dependent commands are received by the Signal Generator at anytime during its operation. The Signal Generator will ignore any device dependent or independent command for which it has not been designed or programmed to respond to. When the Signal Generator is addressed to "Talk", data is then transmitted on its LOCKED, LEVELED and OVERLOAD status in compliance with IEEE STD-488 "Handshake" process to those devices that are addressed to "Listen".

3.5.1 IEEE STD-488 Subsets Implemented

The following is a list of the Subset configuration of the Model 1702 Signal Generator's GPIB:

SH1	Source Handshake, Full
AH1	Acceptor Handshake, Full
T8	Talk, Basic Talker, Unaddressed if MLA
TE0	Extended Talker, None
L4	Listen, Basic Listener, Unaddressed if MTA
LE0	Extended Listener, None
SR0	Service Request, None
RL2	Remote Local, No LLO
PP0	Parallel Poll, None
DC0	Device Clear, None
DT0	Device Trigger, None
C0	Controller, None

3.5.2 GPIB Characteristics

NOTE

For complete details on the electrical, mechanical and timing requirements, refer to IEEE STD-488 1978.

The bus interface lines are assigned IEEE STD-488 mnemonics which are defined as follows:

DI01 through DI08: Data Input/Output lines 1 through 8, transmitted message bytes in bit-parallel, byte-serial format, asynchronously and in a bi-directional manner.

DAV: Data Valid, indicates the availability of data on the DI0 lines.

NRFD: Not Ready for Data, indicates when the device is ready to accept data.

ATN: Attention, indicates how the data on the DIO lines is to be interpreted as control information, and which devices will respond to the data.

IFC: Interface Clear, is used to set the interface system and the devices connected to it into a known quiescent state.

NDAC: Not Data Accepted, indicates when the data received has been accepted.

SRQ:* Service Request is used to request service from a controller.

REN: Remote Enable is used by a controller device (in conjunction with other messages generated in the local logic) to place the Signal Generator in the Remote mode of operation.

EOI:* End or Identify, is used to indicate the end of a data transfer or with the ATN line to execute a polling sequence.

Table 3-3 provides the pin designations for the Rear Panel IEEE-488 PROG connector.

TABLE 3-3 IEEE-488 PROG CONNECTOR

PIN NUMBER	IEEE STD-488 MNEMONIC	PIN NUMBER	IEEE STD-488 MNEMONIC
1	DI01	13	DI05
2	DI02	14	DI06
3	DI03	15	DI07
4	DI04	16	DI08 (Inactive)
5	EOI (Inactive)	17	REN
6	DAV	18	GND (Return)
7	NRFD	19	GND (Return)
8	NDAC	20	GND (Return)
9	IFC	21	GND (Return)
10	SRQ (Inactive)	22	GND (Return)
11	ATN	23	GND (Return)
12	GND (Shield)	24	GND (Logic)

3.5.3 Address Assignment Procedure

The Talk and Listen addresses are selected by the Rear Panel 5-digit ADDRESS switch. The setting of the 5-digit switch determines which Talk address and corresponding Listen address will be assigned to the Signal Generator. Thirty-one Talk/Listen addresses may be assigned. Refer to Table 3-4 for the address to ASCII code format.

NOTE

A 1-1-1-1-1 address must not be assigned to any device interfacing the bus; these addresses are reserved for the unlisten ASCII (?) and the untalk ASCII (—) commands.

*These lines are not used by Model 1702 Signal Generator and are inactive.

TABLE 3-4 TALK/LISTEN ADDRESS ASSIGNMENTS vs. ASCII CHARACTER

ADDRESS SWITCH SETTING BITS					ASCII CHARACTER	
5	4	3	2	1	LISTEN	TALK
0	0	0	0	0	SP	@
0	0	0	0	1	!	A
0	0	0	1	0	"	B
0	0	0	1	1	#	C
0	0	1	0	0	$	D
0	0	1	0	1	%	E
0	0	1	1	0	&	F
0	0	1	1	1	'	G
0	1	0	0	0	(	H
0	1	0	0	1	)	I
0	1	0	1	0	*	J
0	1	0	1	1	+	K
0	1	1	0	0	,	L
0	1	1	0	1	-	M
0	1	1	1	0	.	N
0	1	1	1	1	/	O
1	0	0	0	0	0	P
1	0	0	0	1	1	Q
1	0	0	1	0	2	R
1	0	0	1	1	3	S
1	0	1	0	0	4	T
1	0	1	0	1	5	U
1	0	1	1	0	6	V
1	0	1	1	1	7	W
1	1	0	0	0	8	X
1	1	0	0	1	9	Y
1	1	0	1	0	:	Z
1	1	1	1	1	;	[
1	1	1	0	0	<	/
1	1	1	0	1	=	]
1	1	1	1	0	>	^
*1	1	1	1	1	?	___

*Not to be device assigned refer to note.

3.5.4 IEEE STD-488 Multiline Interface Messages

The IEEE STD-488 messages relate to ASCII code. Table 3-5 provides the IEEE STD-488 DIO 7-bit code to ASCII character relationship.

TABLE 3-5 IEEE STD-488 DIO CODE TO ASCII CHARACTER

IEEE STD-488 DIO BIT							ASCII CHARACTER
7	6	5	4	3	2	1	
0	0	0	1	0	1	0	LF
0	1	0	0	0	0	0	SP
0	1	0	0	0	0	1	!
0	1	0	0	0	1	0	"
0	1	0	0	0	1	1	#
0	1	0	0	1	0	0	$
0	1	0	0	1	0	1	%
0	1	0	0	1	1	0	&
0	1	0	0	1	1	1	'
0	1	0	1	0	0	0	(
0	1	0	1	0	0	1	)
0	1	0	1	0	1	0	*
0	1	0	1	0	1	1	+
0	1	0	1	1	0	0	,
0	1	0	1	1	0	1	-
0	1	0	1	1	1	0	.
0	1	0	1	1	1	1	/
0	1	1	0	0	0	0	0
0	1	1	0	0	0	1	1
0	1	1	0	0	1	0	2
0	1	1	0	0	1	1	3
0	1	1	0	1	0	0	4
0	1	1	0	1	0	1	5
0	1	1	0	1	1	0	6
0	1	1	0	1	1	1	7
0	1	1	1	0	0	0	8
0	1	1	1	0	0	1	9
0	1	1	1	0	1	0	:
0	1	1	1	0	1	1	;
0	1	1	1	1	0	0	<
0	1	1	1	1	0	1	=
0	1	1	1	1	1	0	>
0	1	1	1	1	1	1	?
1	0	0	0	0	0	0	@
1	0	0	0	0	0	1	A
1	0	0	0	0	1	0	B
1	0	0	0	0	1	1	C
1	0	0	0	1	0	0	D
1	0	0	0	1	0	1	E
1	0	0	0	1	1	0	F
1	0	0	0	1	1	1	G
1	0	0	1	0	0	0	H
1	0	0	1	0	0	1	I
1	0	0	1	0	1	0	J
1	0	0	1	0	1	1	K
1	0	0	1	1	0	0	L
1	0	0	1	1	0	1	M
1	0	0	1	1	1	0	N
1	0	0	1	1	1	1	O
1	0	1	0	0	0	0	P
1	0	1	0	0	0	1	Q
1	0	1	0	0	1	0	R
1	0	1	0	0	1	1	S

TABLE 3-5 IEEE STD-488 DIO CODE TO ASCII CHARACTER (Cont'd)

IEEE STD-488 DIO BIT							ASCII CHARACTER
7	6	5	4	3	2	1	
0	1	1	0	0	0	0	4
0	1	1	0	1	0	1	5
0	1	1	0	1	1	0	6
0	1	1	0	1	1	1	7
0	1	1	1	0	0	0	8
0	1	1	1	0	0	1	9
0	1	1	1	0	1	0	:
0	1	1	1	0	1	1	;
0	1	1	1	1	0	0	<
0	1	1	1	1	0	1	=
0	1	1	1	1	1	0	>
0	1	1	1	1	1	1	?

IEEE STD-488 DIO BIT							ASCII CHARACTER
7	6	5	4	3	2	1	
1	0	1	0	1	0	0	T
1	0	1	0	1	0	1	U
1	0	1	0	1	1	0	V
1	0	1	0	1	1	1	W
1	0	1	1	0	0	0	X
1	0	1	1	0	0	1	Y
1	0	1	1	0	1	0	Z
1	0	1	1	0	1	1	[
1	0	1	1	1	0	0	/
1	0	1	1	1	0	1	]
1	0	1	1	1	1	0	^
1	0	1	1	1	1	1	_

3.5.5 GPIB Frequency Selection Data Entry Procedure (Options 06 and 07)

The Model 1702 "Listens" for an ASCII Alphabetic character (A through G) which signifies the frequency digit (address character) followed by an ASCII numerical character which signifies the numerical value (digital character).

TABLE 3-6 FREQUENCY ADDRESS CHARACTERS

ASCII CHARACTER	FREQUENCY DIGIT
A	100 Hz
B	1 kHz
C	10 kHz
D	100 kHz
E	1 MHz
F	10 MHz
G	100 MHz

Following are a number of examples of frequency selection data entries.

Examples:

To change the 1 MHz digit to a numerical 3, enter ASCII Characters E and 3.
To change the 100 MHz (MSD) to a numerical 5, enter ASCII characters G and 5.
To change the 100 Hz (LSD) to a numerical 9, enter ASCII characters A and 9.

If the digit characters are entered which are not preceeded by an address character, the address will decrement for each digit character entered.

Examples:

To program 123.4567 MHz, enter ASCII G1234567.
To program 999.9999 MHz, enter ASCII G9999999.

All spaces, will effect a zero data entry.

Example:

An entry of G0234567 or G 234567 will effect a 23.4567 MHz frequency selection.

The entry of an ASCII letter N allows the Signal Generator to input data information into its register, but the data will not be shifted to the Synthesizer for frequency selection until an ASCII letter O is entered.

The following ASCII characters are ignored by the Signal Generator, and if entered will have no effect on the programming . , ; ! + — .

Example:

An ASCII entry of G1.23;45!67 will provide a frequency selection of 123.4567 MHz.

3.5.6 Status Reporting (Options 06 and 07)

The Signal Generator reports its status when in the "Talk" mode as an ASCII digit followed by a carriage return (CR) and a line feed (LF). The digit is interpreted as an octal number and relates to the following status format.

BIT 1 $\overline{\text{LOCKED}}$
BIT 2 $\overline{\text{LEVELED}}$
BIT 4 OVERLOAD

Examples:

0 signifies normal operation of the Signal Generator.
3 signifies an unlocked and unleveled condition.
6 signifies an overload and unleveled condition.
7 signifies an unlocked, unleveled and overload condition.

3.5.7 GPIB Mode Selection Data Entry Procedure (Option 07)

The Signal Generator "Listens" for ASCII alphabetical character M which signifies a modulation mode selection or a reset of the overload relay, followed by an ASCII numerical character, which signifies the selection function. Refer to Table 3-7 for the mode function selection format.

TABLE 3-7 MODE SELECTION FORMAT

FUNCTION	ASCII
AM	M0
CW	M1
FM	M2
RESET OVERLOAD	M4

NOTE

After entering the RESET OVERLOAD function ASCII M4, the desired Modulation Mode (ASCII M0, M1 or M2) must be re-entered.

3.5.8 GPIB Output Level Selection Data Entry Procedure (Option 07)

The Model 1702 "Listens" for an ASCII Alphabetic character (I through L) which signifies the output level digit (address character) followed by ASCII numerical characters which signifies the numerical value of the output level. Refer to Table 3-8 for the address character format.

TABLE 3-8 LEVEL ADDRESS CHARACTERS

ASCII CHARACTER	OUTPUT LEVEL DIGIT
L	100 dB
K	10 dB
J	1 dB
I	.1 dB

When the numerical characters of 0170 to 1369 are entered, it provides a "vernier" adjustment of the output level in tenths of -dBW (MSD 0 or 1). When the numerical characters of 2140 through 8439 are entered, the MSD provides a -20 dB attenuation

step selection and a vernier adjustment of the numerical value of the three LSD's in -dBW. When a 9 is entered as the MSD numerical digit, the output of the Signal Generator is muted (minimum output). Refer to the following format for the output level data entry scheme.

Following are four examples of output level data entries:

1. -170 dBW enter ASCII L0170 or L217.
2. -270 dBW enter ASCII L0270 or ASCII L2270.
3. -1369 dBW enter ASCII L1369.
4. A minimum (<0.1 μV) output level (mute) enter an ASCII 9 as the MSD numerical digit L9XXX.

3.5.9 GPIB Program Example

The Model 1702 may be program controlled by a number of different controller devices. The typical program example provides the keystrokes entry sequence for programming the Model 1702 using the Systron-Donner 3520 Instrumentation Controller; Hewlett Packard HP9825A and HP9815A Desktop Computers; and the Commodore PET Computer.

In this example, an ASCII 9 listen address and an ASCII Y talk address is assigned to the Model 1702. The assigned address is set by placing the Model 1702's Rear Panel ADDRESS switches to 11001. In the case of the HP9825A, the Desktop Computer is addressed by its Rear Panel address switches (725 address is used in this example for the HP9825A's bus address).

The steps of the example program are written to be keyed into the controller device one step at a time, and the Model 1702 will immediately respond to each of the following steps:

1. Prepare controller for Bus operation.
2. Clear the Bus and command 1702 to remote.
3. Set frequency to 25.654 MHz.
4. Change frequency to 25.600 MHz (2 methods).
5. Set output level to -25.5 dBm (-55.5 dBW). (2 methods).
6. Select AM mode.
7. Check operating status.

The following are Systron-Donner 3520 entry keystrokes:

1. BUS CLR Return
2. BUS REM Return
3. BUS OUT G0256540 Return
4. BUS OUT G0256000 or C000 Return
5. BUS OUT L0555 or L3355 Return
6. BUS OUT MO Return
7. BUS IN A Return Print A Return

Hewlett Packard 9525A Entry Keystrokes

PRESS:

1. (Not Applicable)
2. RESET
3. wrt 725, "G0256540"
   Execute
4. wrt 725, "G0256000" or "C000"
   Execute
5. wrt 725, "L0555" or "L3355"
   Execute
6. wrt 725, "M0"
   Execute
7. red 725, A; dspA

Hewlett Packard 9815A Entry Keystrokes

PRESS:

1. CLEAR
2. Alpha 5 Alpha ?U9 Alpha
3. Alpha 5 Alpha Blank G0256540 Alpha
4. Alpha 5 Alpha Blank G0256000 Alpha or C000 Alpha
5. Alpha 5 Alpha Blank L0555 Alpha or L3355 Alpha
6. Alpha 5 Alpha Blank M0 Alpha
7. 21.25 Alpha 5G ENTER 48—

Commodore PET Entry Keystorkes

1. OPEN 1, 25
2. Not Applicable
3. PRINT #1, "G0256540"
   CR
4. PRINT #1, "G0256000" or "C000"
   CR
5. PRINT #1, "L0555" or "L3355"
   CR
6. PRINT #1, "M0"
   CR
7 1 OPEN 1, 25: INPUT #1,S: PRINT S: END
   CR
   RUN
   CR

3.5.10 GPIB Instrumentation System Capabilities

A typical instrumentation system is shown in Figure 3-3 to illustrate the capability of the GPIB to provide a variety of instrumentation system needs.

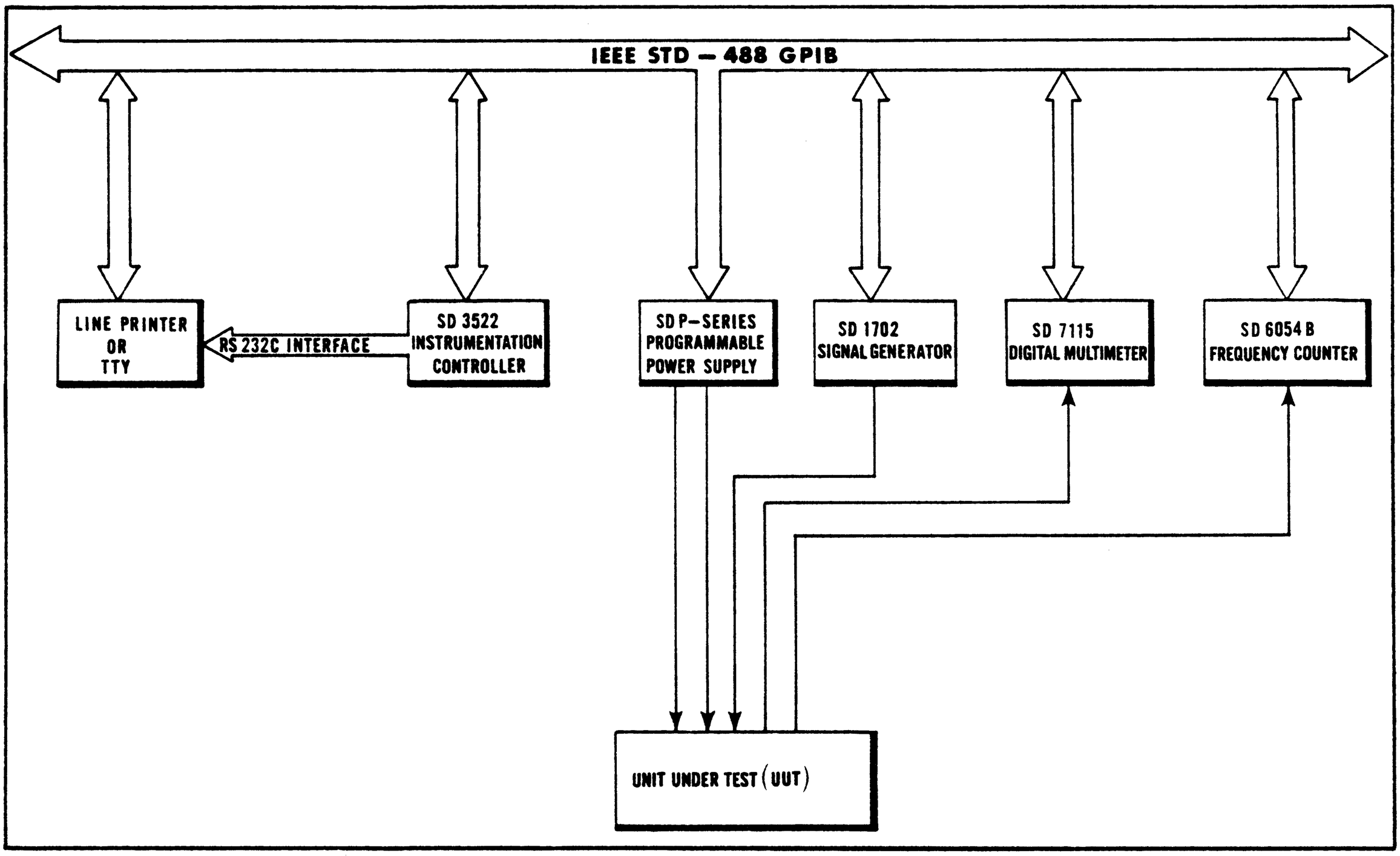

FIGURE 3-3 TYPICAL INSTRUMENTATION SYSTEM

Two examples of possible event sequences to accomplish specific measurement tasks using the GPIB system are provided as follows:

Event Sequence 1 (Basic Data Returned to the Controller).

1. Controller initializes the interface system by issuing the IFC command which causes all devices to set their internal conditions to a predefined state.

2. Controller sends the listen address of the programmable power supply, followed by the program data for that device.

3. Controller sends the unlisten command (UNL) as an ASCII?, then the listen address for the SD 1702 Signal Generator, followed by the program data for it.

4. Controller sends the unlisten command (UNL) as an ASCII?, then the listen address for the next device, followed by the program data for it.

5. Event 4 is then repeated until each device of interest for the test has been addressed and programmed, then the controller issues an unlisten command.

6. Controller sends the listen address of the selected measurement device for example the Model 6054B Frequency Counter), then the program data to initiate a measurement.

7. Controller sends another UNL command, then sends the talk address of the Frequency Counter.

8. Upon completion of it's measurement cycle the Frequency Counter enters it's talk mode and sends the measurement result (basic data) to the controller that is the addressed listener.

9. The controller displays the measurement data on it's CRT or transmits it via the RS232C Interface to the line printer or teletype to generate a "hard copy" of the test results.

Event Sequence 2 (Basic Data Directed to the Line Printer or TTY).

1. Controller initializes the GPIB system by issuing the IFC command which causes all devices to set their internal conditions to a predefined state.

2. Controller sends the listen address of the programmable power supply, followed by the program data for that device.

3. Controller sends the unlisten command (UNL) as an ASCII?, then the listen address for the SD 1702 Signal Generator, followed by the program data for it.

4. Controller sends the unlisten command (UNL) as an ASCII?, then the listen address for the next device, followed by the program data for it.

5. Event 4 is then repeated until each device of interest for the test has been addressed and programmed, then the controller issues an unlisten command.

6. Controller sends the listen address of the selected measurement device (for example the Model 7115 Digital Multimeter), then the program data to initiate a measurement.

7. Controller sends another UNL command, then the listen address of the line printer or the teletype, followed by the talk address of the Digital Multimeter.

8. Upon completion of its' measurement cycle the Digital Multimeter enters it's talk mode and transmits the measurement result (basic data) to the line printer or teletype.

NOTE

If the controller were to address both the line printer or teletype and itself, the resulting basic data would be accepted by both devices, even though the two may have different transfer rates at which the data can be accepted.

CHAPTER 4

PRINCIPLES OF OPERATION

4.1 INTRODUCTION

This chapter describes the principles of operation of the Model 1702 Signal Generator from five perspectives. The overall functional operation at the block diagram level is discussed first, and is referenced to Figure 4-1 Functional Block Diagram. A detailed description of the Synthesizer Assembly A4 is presented next, and is referenced to Figures 4-2 through 4-12 Functional Block Diagrams located in this Chapter and the schematic diagrams that relate to the Synthesizer Assembly are located in Chapter 7. Next the detailed description of the circuitry contained on the Mother PCB A3, and the Clock Oscillator A5 is presented, and is referenced to the schematic diagrams that relate to Assemblies A3,A3A1,A3A2,A3A3,A3A4,A3A5 and A5 which are located in Chapter 7. In Chapter 5, the IC's used in the Signal Generator are listed and described as to their characteristics and are supported by the IC Data Sheets.

4.2 MODEL 1702 FUNCTIONAL DESCRIPTION

The following functional description is referenced to Figure 4-1 Functional Block Diagram. The assemblies that make up the Model 1702 configuration are listed by assembly reference designator, along with their functional names and assembly part number in Table 4-1.

TABLE 4-1 MODEL 1702 ASSEMBLIES

ASSEMBLY REFERENCE	FUNCTIONAL NAME	ASSEMBLY PART NO.
A2A3	Power Regulator Plug-in Assembly	057646
A2A3A1	Power Regulator PCB Assembly (+5,-5,+15)	05753501
A2A3A2	Power Regulator PCB Assembly (-5.2V, -15V,+24V)	05753502
A2A2	Rectifier PCB Assembly	05760601
A3	Motherboard PCB Assembly	05790001
A3A1	Frequency Switch PCB Assembly	05754101
A3A2	Display PCB Assembly	05754401
A3A3	Modulation Control PCB Assembly	05788201
A3A4	Frequency Control PCB Assembly (Opt. 06 & 07)	05784101
A3A5	Amplitude Control PCB Assembly (Opt. 07)	05797101
A4	Synthesizer Assembly	067898
A4A1	AC Discriminator PCB Assembly	05563901
A4A2	10 MHz VCO PCB Assembly	05566201
A4A3	DC Discriminator PCB Assembly	05537401
A4A4	Time Base PCB Assembly	05395401
A4A5	Source 2 PCB Assembly (Std)	05362401
A4A5	Source 2 PCB Assembly (Opt. 06 & 07)	06700501
A4A6	Source 3 PCB Assembly	05373501
A4A7	Extender PCB Assembly	057102
A4A8	400 MHz Reference PCB Assembly	05566801
A4A9	Control Logic PCB Assembly	05567101
A4A10	Divide-By-N PCB Assembly	05567001
A4A11	Source 4 PCB Assembly	05372401
A4A12	Phase Detector PCB Assembly	05538501
A4A13	Source 5 PCB Assembly	05797001
A4A14	Amplifier PCB Assembly	05392901

TABLE 4-1 MODEL 1702 ASSEMBLIES (Cont'd.)

ASSEMBLY REFERENCE	FUNCTIONAL NAME	ASSEMBLY PART NO.
A4A15	Synthesizer Motherboard PCB Assembly	06738001
A4A16	Mixer Assembly	05547001
A4A17	Connector PCB Assembly	05569301
A5	Oscillator Control PCB Assembly (Std.)	05756001
A5	Oscillator Control PCB Assembly (Opt. 01)	05756003
A5	Oscillator Control PCB Assembly (Opt. 02)	05756002
U1	Attenuator Assembly (Std.)	053994
U1	Attenuator Assembly (Opt. 07)	057848 or 075354

The Model 1702 Signal Generator is supplied in a number of configurations depending on options. The following description covers all configurations.

The heart of the Signal Generator is the Synthesizer Assembly A4, which consists of an RFI enclosure containing 18 subassemblies, 13 of them being plug-in circuit boards. The Synthesizer A4 Assembly provides a number of functions that are not used with the Signal Generator, i.e.: IF Outputs; Level Detection (Squelch); AGC and other functions that relate to Receiver functions. Interface to the Synthesizer's internal circuits is provided via coax connector A4J22 1 MHz Time Base Input and A4J21 rf Output, and the Connector PCB Assembly A4A17. Table 4-2 provides the A4 Synthesizer interface information.

TABLE 4-2 SYNTHESIZER A4 INTERFACE

CONNECTOR & PIN NUMBER	SIGNAL NAME	TO/FROM
A4J21	RF OUTPUT	To Attenuator U1
A4J22	TB INPUT	From Clock Oscillator A5 pad (11)
A4XA17-3	FM CAL (Ground)	From A3 pad (14)
A4XA17-4	$\overline{\text{RCVR}}$ (+15V)	From A3 pad (13)
A4XA17-5	+24V	From A3 pad (42)
A4XA17-6	+5V	From A3 pad (48)
A4XA17-7	-5.2V	From A3 pad (50)
A4XA17-8	Ground	From A3 pad (40)
A4XA17-9	+15V	From A3 pad (44)
A4XA17-10	-15V	From A3 pad (46)
A4XA17-11	FREQ. SELECT OCTAL A	To A3 pad (6)
A4XA17-12	FREQ. SELECT OCTAL B	To A3 pad (7)
A4XA17-13	FREQ. SELECT BCD 1	From A3 pad (11)
A4XA17-14	FREQ. SELECT BCD 4	From A3 pad (10)
A4XA17-15	AM MOD	From A3 pad (1)
A4XA17-C	FM ENABLE	From A3 pad (16)

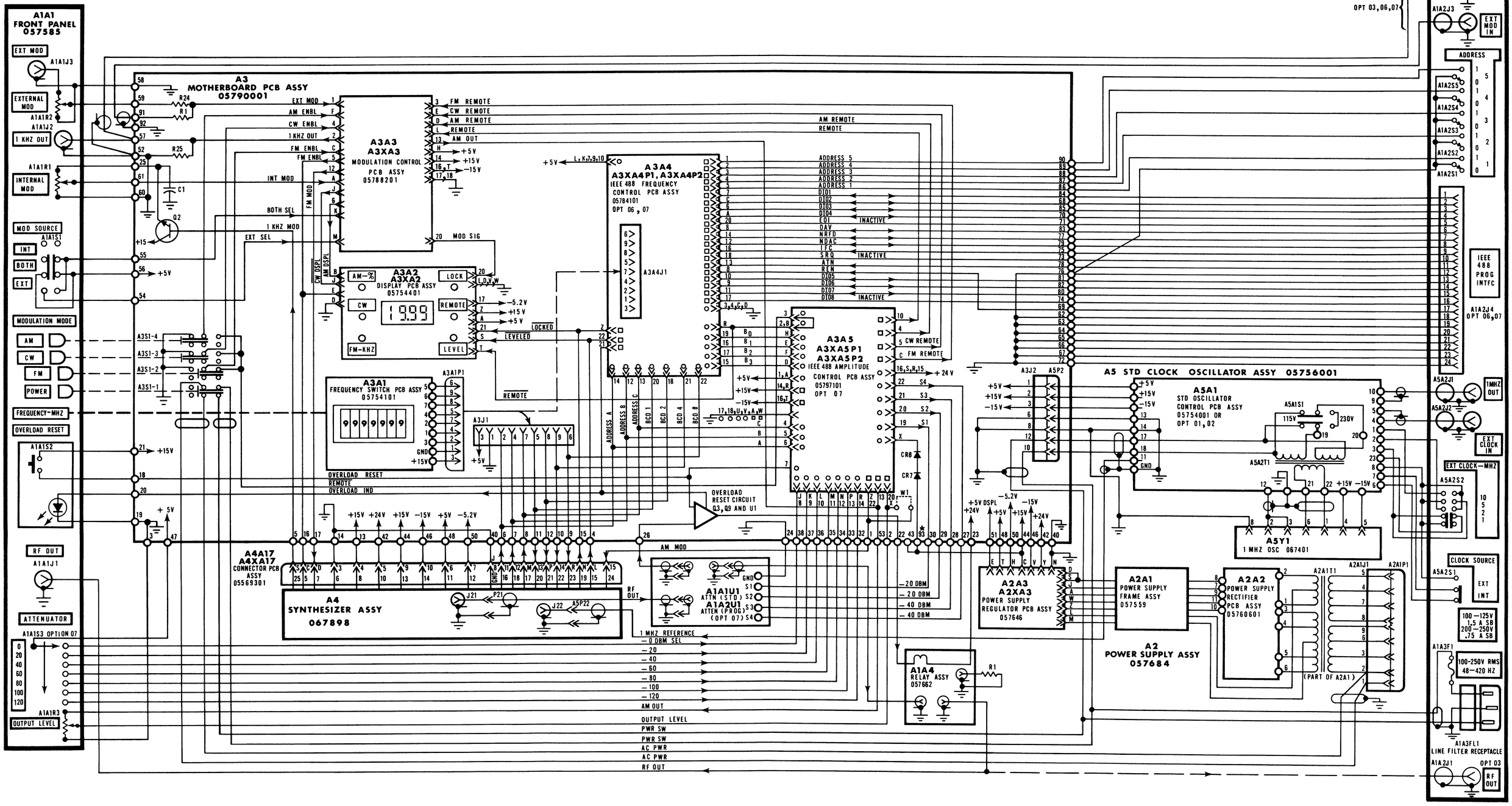

Figure 4-1
Functional Block Diagram

TABLE 4-2 SYNTHESIZER A4 INTERFACE (Cont'd)

CONNECTOR & PIN NUMBER	SIGNAL NAME	TO/FROM
A4XA17-D	FM MOD	From A3 pad (17)
A4XA17-L	$\overline{\text{LEVEL}}$	To A3 pad (4)
A4XA17-M	FREQ. SELECT OCTAL C	To A3 pad (8)
A4XA17-N	$\overline{\text{LOCK}}$	To A3 pad (15)
A4XA17-P	FREQ. SELECT BCD 2	From A3 pad (12)
A4XA17-R	FREQ. SELECT BCD 8	From A3 pad (9)
A4XA17-S	1 kHz OUT	To A3 pad (5)

The Mother PCB A3 contains five PCB Assemblies that provides the subfunctions of the Signal Generators operation. The following Tables 4-3 through 4-7 provide the interface information of the A3A1 through A3A5 PCB Assemblies.

TABLE 4-3 FREQUENCY SWITCH PCB ASSEMBLY A3A1 INTERFACE

A3A1P1 PIN NUMBER	SIGNAL NAME	TO/FROM
1	Ground	To A3J1-1 or A3A4J1-1
2	FREQ. SELECT OCTAL A	From A3J1-2 or A3A4J1-2
3	+5V	From A3J1-3 or A3A4J1-3
4	FREQ. SELECT OCTAL B	From A3J1-4 or A3A4J1-4
5	FREQ. SELECT BCD 1	To A3J1-5 or A3A4J1-5
6	FREQ. SELECT BCD 8	To A3J1-6 or A3A4J1-6
7	FREQ. SELECT OCTAL C	From A3J1-7 or A3A4J1-7
8	FREQ. SELECT BCD 2	To A3J1-8 or A3A4J1-8
9	FREQ. SELECT BCD 4	To A3J1-9 or A3A4J1-9

NOTE: When the Signal Generator is not optioned for 06 and 07 GPIB interface, A3A1P1 is connected to A3J1. When the Signal Generator is optioned for 06 and/or 07 GPIB interface A3A1P1 is connected to A3A4J1.

TABLE 4-4 DISPLAY PCB ASSEMBLY A3A2 INTERFACE

A3A2 EDGE CONNECTOR PIN NUMBER	SIGNAL NAME	TO/FROM
21,Y	$\overline{\text{LOCKED}}$	From A4A17-N
S	$\overline{\text{LEVELED}}$	From A4A17-L
E	FM ENBL	From A3A3-5
J	$\overline{\text{CW DSPL}}$	From A3A3-J
B	AM DSPL	From A3A3-6

TABLE 4-4 DISPLAY PCB ASSEMBLY A3A2 INTERFACE (Cont'd)

A3A2 EDGE CONNECTOR PIN NUMBER	SIGNAL NAME	TO/FROM
T	$\overline{\text{REMOTE}}$	From A3A4-R
20	MOD SIGNAL	From A3A3-20
10,D,L,V,W	Ground	From A3 pad (40)
Z	+15V	From A3 pad (44)
A	+5V	From A3 pad (48)
17	-5.2V	From A3 pad (50)

TABLE 4-5 MODULATION CONTROL PCB ASSEMBLY A3A3 INTERFACE

A3A3 EDGE CONNECTOR PIN NUMBER	SIGNAL NAME	TO/FROM
20	MOD SIGNAL	To A3A2-20
5	FM ENBL	To A3A2-E and A4XA17-C via A3 pad (16)
J	$\overline{\text{CW DSPL}}$	To A3A2-J
6	AM DSPL	To A3A2-B
13	AM OUT	To OUTPUT LEVEL CONTROL R28 and A3A5-13
M	EXT SEL	From MOD SOURCE SWITCH S1 via A3 pad (54)
K	BOTH SEL	From MOD SOURCE SWITCH S1 via A3 pad (55)
12	FM MOD	To A4XA17-D via A3 pad (17)
3	FM REMOTE	From A3A5-C
E	CW REMOTE	From A3A5-5
D	AM REMOTE	From A3A5-4
L	REMOTE	From A3A5-10
C	FM ENBL	From MOD MODE SW A3S1-2
4	CW ENBL	From MOD MODE SW A3S1-3
F	AM ENBL	From MOD MODE SW A3S1-4
2	1 kHz OUT	To 1 kHz OUT connector J2 via A3 pad (57)
1	EXT MOD	From swinger of R2 via A3 pad (59)
A	INT MOD	From swinger of R1 via A3 pad (61)
14	+15V	From A3 pad (44)
H	+5V	From A3 pad (48)
17,18	Ground	From A3 pad (40)
16,T	-15V	From A3 pad (46)

TABLE 4-6 FREQUENCY CONTROL PCB ASSEMBLY A3A4 INTERFACE

A3A4 EDGE CONNECTOR PIN NUMBER	SIGNAL NAME	TO/FROM
[1]	ADDRESS 5	From S5
[2]	ADDRESS 4	From S4
[3]	ADDRESS 3	From S3
[4]	ADDRESS 2	From S2
[5]	ADDRESS 1	From S1
[7]	DIO1	To/From IEEE-488 PROG Connector 1
[C]	DIO2	To/From IEEE-488 PROG Connector 2
[6]	DIO3	To/From IEEE-488 PROG Connector 3
[A]	DIO4	To/From IEEE-488 PROG Connector 4
[10]	DIO5	To/From IEEE-488 PROG Connector 13
[9]	DIO6	To/From IEEE-488 PROG Connector 14
[11]	DIO7	To IEEE-488 PROG Connector 15
[17]	DIO8	To/From IEEE-488 PROG Connector 16
[8]	DAV	To/From IEEE-488 PROG Connector 6
[14]	NRFD	To IEEE-488 PROG Connector 7
[12]	NDAC	To IEEE-488 PROG Connector 8
[B]	REN	From IEEE-488 PROG Connector 17
[20]	EOI	To/From IEEE-488 PROG Connector 5
[18]	SRQ	To/From IEEE-488 PROG Connector 10
[13]	ATN	From IEEE-488 PROG Connector 11
[16]	IFC	From IEEE-488 PROG Connector 9
[21]	OVERLOAD IND	From A3 pad 20
[22]	$\overline{\text{LEVELED}}$	From A4XA17-L
[Z]	$\overline{\text{LOCKED}}$	From A4XA17-N
(20)	FREQ. SELECT BCD 1	To A4XA17-13
(18)	FREQ. SELECT BCD 2	To A4XA17-P
(21)	FREQ. SELECT BCD 4	To A4XA17-14
(22)	FREQ. SELECT BCD 8	To A4XA17-R
(14)	FREQ. SELECT OCTAL A	From A4XA17-11
(12)	FREQ. SELECT OCTAL B	From A4XA17-12
(13)	FREQ. SELECT OCTAL C	From A4XA17-M
(R)	$\overline{\text{REMOTE}}$	To A3A2-T and A3A5-B

TABLE 4-6 FREQUENCY CONTROL PCB ASSEMBLY A3A4 INTERFACE (Cont'd)

A3A4 EDGE CONNECTOR PIN NUMBER	SIGNAL NAME	TO/FROM
(19)	B0	To A3A5 - (H)
(16)	B1	To A3A5 - (E)
(17)	B2	To A3A5 - (F)
(15)	B3	To A3A5 - (D)
(7)	+5V	From A3 pad (48)
(8)	+5V	From A3 pad (48)
(9)	+5V	From A3 pad (48)
(10)	+5V	From A3 pad (48)
(3)	Ground	From A3 pad (40)
(4)	Ground	From A3 pad (40)
A3A4J1 CONNECTOR PIN NUMBER		
1	Ground	From A3A1P1-1
2	FREQ. SELECT OCTAL A	From A3A1P1-2
3	+5V	From A3A1P1-3
4	FREQ. SELECT OCTAL B	From A3A1P1-4
5	FREQ. SELECT BCD 1	From A3A1P1-5
6	FREQ. SELECT BCD 8	From A3A1P1-6
7	FREQ. SELECT OCTAL C	From A3A1P1-7
8	FREQ. SELECT BCD 2	From A3A1P1-8
9	FREQ. SELECT BCD 4	From A3A1P1-9

TABLE 4-7 AMPLITUDE CONTROL PCB ASSEMBLY A3A5 INTERFACE

A3A5 EDGE CONNECTOR PIN NUMBER	SIGNAL NAME	TO/FROM
(3)	$\overline{\text{REMOTE}}$	To MOD MODE SWITCH A3S1
(H)	B0	From A3A4-19
(E)	B1	From A3A4-16
(F)	B2	From A3A4-17
(D)	B3	From A3A4-15
(6)	FREQ. SELECT OCTAL A	From A4XA17-11

TABLE 4-7 AMPLITUDE CONTROL PCB ASSEMBLY A3A5 INTERFACE (Cont'd)

A3A5 EDGE CONNECTOR PIN NUMBER	SIGNAL NAME	TO/FROM
(5)	FREQ. SELECT OCTAL B	From A4XA17-12
(4)	FREQ. SELECT OCTAL C	From A4XA17-M
(7)	OVERLOAD RESET	To A3 pad (18)
(J)	-0 dB ATTEN.	From ATTEN STEP SWITCH S3
(K)	-20 dB	From ATTEN STEP SWITCH S3
(10)	-40 dB	From ATTEN STEP SWITCH S3
(M)	-60 dB	From ATTEN STEP SWITCH S3
(12)	-80 dB	From ATTEN STEP SWITCH S3
(13)	-100 dB	From ATTEN STEP SWITCH S3
(R)	-120 dB ATTEN.	From ATTEN STEP SWITCH S3
(19)	S1 -20 dB	To ATTEN U1 S1
(20)	S2 -20 dB	To ATTEN U1 S2
(21)	S3 -40 dB	To ATTEN U1 S3
(22)	S4 -40 dB	To ATTEN U1 S4
[4]	AM REMOTE	To A3A3-D
[5]	CW REMOTE	To A3A3-E
[C]	FM REMOTE	To A3A3-3
[10]	REMOTE	To A3A3-L
[Z]	AM MOD	To A4XA17-15 via A3 Pad (1) (Option 07)
		To OUTPUT LEVEL CONTROL R3 via A3 pad (53) (Std and Option 06)
[20]	OUTPUT LEVEL	From swinger OUTPUT LEVEL CONTROL R3 via A3 pad (2)
[13]	AM OUT	From A3A3-13
(S)	+24V	From A3 pad (42)
(15)	+24V	From A3 pad (42)
(16)	+24V	From A3 pad (42)
(R)	+24V	From A3 pad (42)
(1)	+5V	From A3 pad (48)
(A)	+5V	From A3 pad (48)
[A]	Ground	From A3 pad (40)

TABLE 4-7 AMPLITUDE CONTROL PCB ASSEMBLY A3A5 INTERFACE (Cont'd)

A3A5 EDGE CONNECTOR PIN NUMBER	SIGNAL NAME	TO/FROM
[W]	Ground	From A3 pad (40)
(17)	Ground	From A3 pad (40)
(18)	Ground	From A3 pad (40)
(U)	Ground	From A3 pad (40)
(V)	Ground	From A3 pad (40)
[14]	+15V	From A3 pad (44)
[R]	+15V	From A3 pad (44)
[16]	-15V	From A3 pad (46)
[T]	-15V	From A3 pad (46)

The Frequency Switch PCB Assembly A3A1 interfaces with the Synthesizer A4 via connector A3J1 when the Signal Generator is in its standard configuration and allows for the local selection of the Synthesizer's frequency. When Options 06 and/or 07 are installed, the Frequency Switch PCB Assembly A3A1 interfaces with the Synthesizer via the Frequency Control PCB Assembly A3A4 to allow local (frequency switch) selection or remote (IEEE STD-488 GPIB) selection of the Synthesizer's frequency.

The frequency selection is by a 1-2-4-8 binary coded decimal (BCD) and an A-B-C Octal number format. The frequency selection is encoded to the proper format by the logic located within the Frequency Switch Assembly A3A1 when local selection is made or by the logic located within the Frequency Control Assembly A3A4 when remote GPIB program selection is made.

The rf output of the Synthesizer at connector A4J21 is a fundamental frequency (non-harmonic) of discrete 100 Hz steps as selected by the Frequency Switch or the remote program. The accuracy (stability) of the rf output is referenced to the Clock Oscillator 1 MHz Time Base input at A4J22. The Synthesizer is normally referenced to the standard 1 MHz reference oscillator having a $\pm 7 \times 10^{-9}$ parts per day, or the optional reference oscillator having a $\pm 3 \times 10^{-9}$ parts per day stability. A Rear Panel BNC connector J2 (EXT CLK IN) allows for the application of a 1 MHz, 2 MHz, 5 MHz or 10 MHz reference from an external frequency standard, when the Rear Panel CLK SOURCE Switch S1 is placed in its EXT position and the EXT CLOCK MHz S2 selector switch is set to its appropriate position. The Rear Panel 1 MHz OUT J1 BNC connector allows for monitoring the 1 MHz clock which is the complement of the +5 V TTL reference clock applied to A4J22.

The Synthesizer supplies an rf output at A4J21 that is adjustable from 0.1 V rms to 1 V rms by the Output Level control R3 when in local operation, or by the GPIB program and logic located within the Amplitude Control Assembly A3A5 when in remote operation. This A4J21 rf output is applied via coax cable to the Attenuator Assembly U1. The Attenuator Assembly is a seven step (-20 dB per step) attenuator which provides 0 to 120 dB attenuation of the rf output. The attenuator is stepped by switch S3 when in local operation and stepped by the GPIB program and logic located within the Amplitude Control Assembly A3A5 when in remote operation.

The Attenuator output is applied to Relay Assy A1A4. The Relay provides overload protection of the output circuit of the Signal Generator. Circuitry located on the Mother PCB A3 provides the output overload detection and the relay trip function. The output rf level is sensed by the signal developed across resistor A3R2. This signal is then detected by diode A3CR1 and capacitors A3C2 and A3C3 to generate an overload sense signal. Transistors A3Q3, A3Q4 and A3Q5 act as full-wave threshold detectors for dc and low frequency ac signals; and also generate an overload sense signal. The overload sense signal is applied to differential amplifier A3U1 pin 2. Potentiometer A3R8 adjusts the overload trip point of the output protector circuit by setting the negative reference level on A3U1 pin 3. A3U1 functions as a Schmitt trigger. The circuit is reset by the OVERLOAD RESET signal generated by either the Front Panel OVERLOAD RESET switch S2 or remote OVERLOAD RESET signal generated by the logic located within the Amplitude Control Assembly A3A5.

This OVERLOAD RESET is a +15 V transition which will unlatch A3U1 via transistor A3Q9. When an overload trip is generated at A3U1 pin 6, the output protector relay A1A4 will de-energize and open up the rf output to the RF OUT connector, terminating the rf output to ground via its internal 56 Ω resistor. Transistor A3Q7 will generate a LEVEL and an OVERLOAD signal as a +15 V on its collector on an overload trip condition. The LEVEL signal is applied to the Display Assembly A3A2 pin S to extinguish its LEVEL LED indicator A3A2DS10 and to the Frequency Control Assembly A3A4 pin 22 to generate a LEVEL status report for the GPIB interface. The OVERLOAD signal is applied to the Front Panel OVERLOAD RESET switch S2 to illuminate its LED and to the Frequency Control Assembly A3A4 pin 21 to generate an OVERLOAD status report for the GPIB interface.

The Front Panel MOD SOURCE switch S1 interfaces with the Modulation Control Assembly A3A3 pins M and K to provide selection of the modulation source. When the MOD SOURCE switch is placed in INT A3A3, pin M and L are both pulled low via internal resistors and effects the selection of the INT MOD IN signal at A3A3 pin A as the modulation source. This INT MOD IN signal is obtained from the Synthesizer at A4A17 pin S as a 1 kHz signal (INT MOD SOURCE) and applied via transistor A3Q2 and the INT MOD Front Panel control R1 to A3A3 pin A. When the MOD SOURCE switch is placed in EXT A3A3 , pin M is set to a logic high and effects the selection of the EXT MOD IN signal at A3A3 pin 1. This EXT MOD IN signal is obtained from the EXT MOD IN Front Panel connector and applied via EXT MOD Front Panel control R2 or the Rear Panel Option 03 EXT MOD IN connector J3 to A3A3 pin 1. When the MOD SOURCE switch is placed in BOTH, A3A3 pin K is set to a logic high and effects the selection of both the EXT MOD IN signal at A3A3 pin 1 and the INT MOD IN signal at A3A3 pin A.

The MODULATION MODE switch A3S1 which is mounted on the Mother PCB A3 and operated via the Front Panel interfaces with the Modulation Control Assembly A3A3 pins C, 4 and F to provide selection of the type of modulation during local operation. When the Signal Generator is in the Local mode of operation (not on the GPIB interface), the $\overline{\text{REMOTE}}$ signal as a logic high from the Amplitude Control Assembly A3A5 pin 3 is applied to the MODULATION MODE switch A3S1 to enable its function. When fm mode is switch selected, a logic high is set on A3A3 pin C which will enable the FM OUT signal at A3A3 pin 12 which is applied to the Synthesizer at A4A17 pin D. An fm flag is also generated as a logic high at A3A3 pin 5 which is applied to the Display Assembly A3A2 pin E to illuminate its fm-kHz LED annunciator A3A2DS5. When A3A5 is not installed (Option 07), A3S1 is always enabled via pull up resistor A3R23. The fm flag is also applied to the Synthesizer at A4A17 pin 16 as an FM ENABLE. When cw mode is switch selected, a logic high is set on A3A3 pin 4 which will enable an unmodulated dc level at A3A3 pin 13 as the AM OUT signal.

A $\overline{cw}$ flag is also generated at A3A3 pin J as a logic low which is applied to the Display Assembly A3A2 pin J to illuminate its cw LED annunciator A3A2DS7 and inhibit the 3-1/2 digit display. When the AM mode is switch selected, a logic high is set on A3A3 pin F which will enable an am signal at A3A3 pin 13. An am flag is also generated at A3A3 pin 6 as a logic high which is applied to the Display Assembly A3A2 pin B to illuminate its am % LED annunciator A3A2DS6. When the Signal Generator is in the remote mode of operation (on the GPIB interface), the MODULATION MODE switch A3S1 is disabled by a logic low $\overline{REMOTE}$ signal from A3A5 pin 3 (if A3A5 Option 07 is installed). The modulation mode selection is provided by the REMOTE FM, CW or AM signal from the A3A5 Amplitude Control Assembly pins 4, 5 or C. The remote modulation select signals provide the same functions as the local modulation selects described above.

A shaped and level adjusted 1 kHz signal at A3A3 pin 2, which is always present regardless of modulation selection, is applied to the Front Panel 1 kHz OUT connector J2 and the Rear Panel Option 03 1 kHz OUT connector J2. The Modulation Control Assembly A3A3 outputs an analog voltage level that relates to the % of am or deviation is kHz of fm, at A3A3 pin 20 as the MOD SIG. The MOD SIG is applied to the Display Assembly A3A2 pin 20 to provide a 3-1/2 digit numerical display of the modulation in either % of am or deviation in kHz of fm.

The Signal Generator's Power Supply consists of the following: a main chassis mounted power transformer T1; a Rectifier PCB Assembly A2A2; a plug-in Power Supply Regulator Assembly A2A3 and an ac line selector plug/connector A2A1P1.

The ac line voltage is supplied to the Signal Generator via the Rear Panel 100 to 250 V rms, 48 to 420 Hz connector FL1. The Signal Generator is protected from ac line overloads by the Rear Panel mounted fuse F1 (1.5 A SB for 100 to 125 V operation and 0.75 A SB for 200 to 250 V operation). The ac line voltage is connected directly to connector A3J2 pins 10 and 12 to supply ac to the oven of the optional high stability oscillator when installed; thus, allowing the Oscillator oven to remain on whenever the Signal Generator is connected to an ac line source. When the optional high stability oscillator is installed, a PC mounted 115 to 230 V switch S1 is provided to allow for the proper ac line voltage setting. The ac line voltage is also routed via the Front Panel POWER on-off pushbutton switch to the ac line connector, pins 1 and 2. Eight different ac line select plugs, plug into this connector to provide for the different line voltage configurations of the power transformer T1 primary connections. Table 4-8 provides the A2A1P1 jumper connection configuration, part number and wire color code as related to line voltage requirement.

TABLE 4-8 A2A1P1 PLUG CONFIGURATIONS

LINE VOLTAGE	JUMPER CONNECTIONS PINS	PINS	PART NUMBER	COLOR CODE
100	2-8	1-3-7	05767801	Brown
115	2-8	1-4-6	05767802	White
125	2-8	1-5-9	05767803	Red
200	1-7	3-8	05767804	Orange
215	1-7	6-8	05767808	Gray
230	1-4	6-8	05767805	Yellow
240	1-5	6-8	05767807	Violet
250	1-5	8-9	05767806	Green

The secondary windings of power transformer T1 interface with A2A2 PS Rectifier Assembly. The rectifier assembly contains ten 3-ampere diodes configured as two full-wave bridge rectifiers and one full-wave center-tapped rectifier. Bridge rectifier CR1 through CR4 provides direct current (positive voltage) to the +5 V DSPL regulator, U2, and the +5 V regulator, U3, through series pass element Q2. The negative return of bridge rectifier CR1 through CR4 provides direct current (negative voltage) from the -5.2V regulator, U6, through series pass element Q4. Bridge rectifier CR5, CR6, CR8, CR9 provides direct current (positive voltage) to the +15 V regulator, U1, and direct current (negative voltage) from the -15 V regulator, U5. Full-wave center-tapped rectifier CR7, CR10 provides direct current (positive voltage) to the +24 V regulator, U4. Five power supply frame-mounted filter capacitors, C1 through C5, are connected from these voltage potentials to the respective T1 center-tapped returns.

Power Regulator A2A3 consists of two subassemblies A2A3A1 and A2A3A2 which contain the regulators for the six regulated dc outputs. Table 4-9 provides a listing of the power supply regulator components that relate to the six power supply outputs.

TABLE 4-9 REGULATOR POWER SUPPLY COMPONENTS

XA3 CONNECTOR PIN NUMBER	OUTPUT VOLTAGE	REGULATOR(s) REF DESIGNATOR & TYPE	FILTER CAP REF DESIGNATOR
T	+5V (V_{cc})	U3 MC7805 Q1 2N6040 Q2 2N4918	C6 and C7
E	+5V (DISPLAY)	U2 MC7805	C10 and C11
C	+15V	U1 MC7815	C8 and C9
Y	+24V	U4 MC7824	C14 and C15
V	-15V	U5 MC7915	C16 and C17
H	-5.2 (V_{ee})	U6 MC7905.2 Q3 2N6043 Q4 2N4921	C12 and C13

4.3 SYNTHESIZER ASSEMBLY FUNCTIONAL DESCRIPTION

The Synthesizer generates a fundamental (non-harmonic) rf output having a frequency of 100 Hz to 999.9999 MHz that is selected in 100 Hz steps by the Frequency switch setting. Figure 4-2 provides a functional block diagram of the Synthesizers signal generation process. The following description is referenced to Figure 4-2, and the Synthesizer Mother PCB Schematic Diagram located in Chapter 7 of this manual.

The Synthesizer Assembly used in the Signal Generator provides a number of functions that are not used, i.e., L.O. Output; IF Outputs; Level Detection (Squelch); AGC and other functions that relate to receiver functions. The following descriptions, paragraphs 4.2 and 4.3, relate to the Synthesizer Assembly in its complete functional configuration.

The Synthesizer contains twelve voltage controlled oscillators (VCO), five phase detectors and three heterodyne mixer circuits that comprise two major and four secondary phase-lock loops. All the reference signals, i.e., 400 MHz, 0.5 MHz and 1 kHz relate and are referenced to the 1 MHz Time Base Oscillator.

Digital phase/frequency lock loop techniques are used, which compare the frequency and the phase of the input (reference) signal to the output of the VCO which is fed back via a divider counter or a mixer to the phase detector. The phase detector receives the reference, along with the VCO feedback from a divider counter

or mixer, and compares these for any phase/frequency difference. The result is a difference signal (dc level) produced by the phase detector that adjusts the frequency of the VCO. If the signals are in phase, a lock will be achieved, after which the VCO will continue to track the reference.

The Frequency Switch Assembly A3A1 or the Frequency Control Assembly A3A4, interfaces with the Time Base Assembly A4A4 allowing the frequency selection input. The Time Base outputs the 10^2 through 10^5 digit strobes and the 1-2-4-8 BCD Frequency code to the Source 2 Assembly A4A5 to program the A4A10 Divide-By-N Counter via latches on the Logic Assembly A4A9.

The Source 2 VCO generates 10.000 to 19.999 MHz frequency that is phase-locked to the 1 kHz REF signal, the actual frequency that the VCO locks on is determined by the ÷N counter N number which is programmed by the Frequency Switch setting. A ÷10 counter divides the VCO frequency to produce a 1.0000 to 1.9999 MHz output which is applied to the Source 3 Assembly A4A6.

Source 3 Assembly A4A6 contains a 11.0000 to 11.9999 MHz VCO. When operating in the cw mode, its output is heterodyned with the 10 MHz REF signal from the 400 MHz Reference Assembly A4A8 by the mixer which produces an if output of 1.000 to 1.999 MHz which is applied to the phase detector via the low pass filter; thus, developing a phase-lock loop. When the fm mode is selected, the 10 MHz REF is removed from the mixer and the FM IN signal is applied. This FM IN signal has a center frequency of 10 MHz and a deviation of up to 20 kHz, which will modulate the Source 3 output frequency.

The Phase Detector Assembly A4A12 compares the phase difference of the Source 3 A4A6 and the Mixer Assembly A4A16 outputs, and generates the High Band and Low Band Frequency Control signals. The High Band and Low Band Frequency Control signals are applied to the Source 5 Assembly to enable its selected VCO to search and lock onto the selected frequency.

The Frequency Tracking signal for the Source 5 VCO's and the Frequency Control signal for the Source 4 VCO's are generated by the ÷N Assembly A4A10. The ÷N decade counter circuit is programmed to divide the count by an N number that relates to the 10^6 through 10^8 BCD frequency code. This code in turn relates to the Frequency selection, and is generated by the Logic Assembly A4A9 via the Time Base 10^6 through 10^8 Hz strobes and the 1-2-4-8 BCD frequency code. The 99 to 494 MHz Source 4 output is divided by a two modulus 10/11 prescaler and then divided by the programmed N counter. The ÷N counters output is compared by the phase detector with the 1 MHz or 0.5 MHz reference signals (the 0.5 MHz REF is selected when the Logic Assembly A4A9 generates the X2 command). The phase detector circuit outputs the Frequency Tracking and Frequency Control signal via its integrating amplifier to the Source 5 and Source 4 Assemblies, respectively.

Source 4 Assembly A4A11 contains four VCO's that are controlled by the Frequency Control signal generated by the Divide-By-N Assembly A4A10. The VCO output gate enabled from the Logic Assembly will select one of the four VCO's. The output at J2A11 is a signal of 99 to 494 MHz in 1MHz steps or 0.5 MHz steps when doubling and is applied to the Divide-By-Ten Assembly to complete the Source 4 phase-lock frequency control loop. The other Source 4 output at J1 is a signal of 99 to 998 MHz in 1 MHz steps, the actual frequency is dependent on which VCO is selected and if X2 mixer is enabled by the X2 command applied to A4A11 pin M. This 99 to 998 MHz signal (which is 11 MHz lower than the three most significant frequency digits) is applied to the Mixer Assembly A4A16 where it is heterodyned with the 110.0000 to 999.9999 MHz Source 5 signal to generate the 11.0000 to 11.9999 MHz if that is applied to the Phase Detector Assembly at A4A12 pin Y.

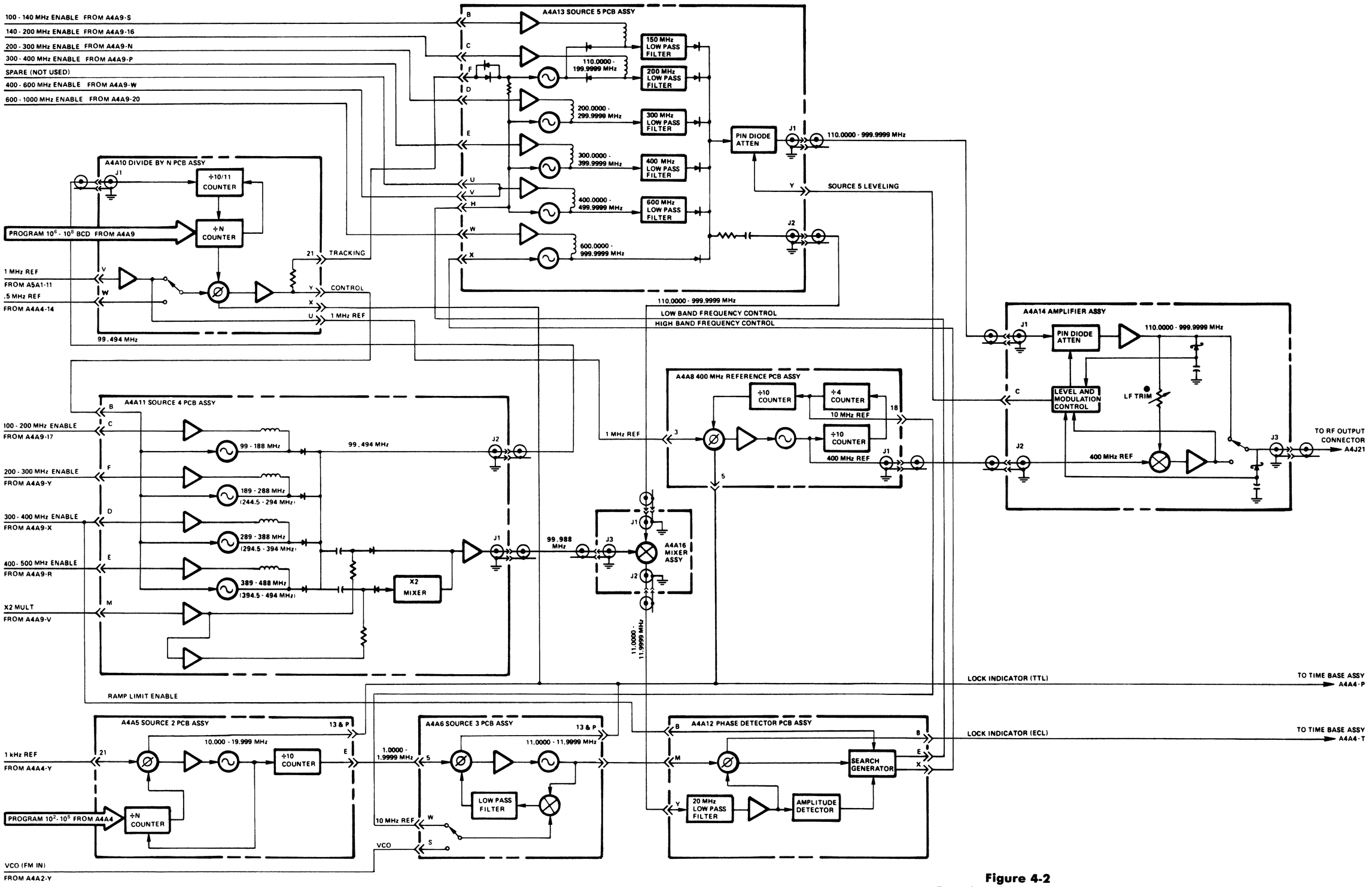

Figure 4-2
Functional Block Diagram
Signal Generation Process

The Source 5 Assembly contains five VCO's that are selected (one of the five) by the gate enable signals from the Logic Assembly. The four lower frequency VCO's (110.0000 to 499.9999 MHz) are tuned by the Low Band Frequency Control signal from the Phase Detectors Search Generator which is applied to A4A13 pin H. The High Band VCO (600.0000 to 999.9999 MHz) is tuned by the High Band Frequency Control which is also generated by the Phase Detector Assembly and applied to A4A13 pin X. The tracking signal from the Divide-By-N Assembly A4A10 is applied to the Source 5 (110.0000 to 199.9999 MHz) VCO via A4A13 pin F to prevent locking onto a VCO harmonic. The selected VCO output is gate enabled and applied to the A4A13J2 output coax connector via the appropriate Low Pass Filter. This 110.0000 to 999.9999 MHz output at A4A13J2 is then applied to the Mixer Assembly A4A16J1. The output biased by the Source 5 leveling signal is applied to A4A13 pin Y. Also, the leveled 110.0000 to 999.9999 MHz output is routed from A4A13J1 to the Amplifier Assembly input coax connector A4A14J1.

The Amplifier Assembly A4A14 contains the Level and Modulation Control Circuits, an input Pin Diode Attenuator Circuit, the Mixer circuit to generate the 100 Hz to 109.9999 MHz output. The Source 5, 110.0000 to 999.9999 MHz output is applied to the PIN Diode Attenuator via connector A4A14J1. When the Synthesizer output is from 100 Hz to 109.9999 MHz, the coax relay is pulled and the output source is from the Mixer circuit via its associated amplifier. This mixer heterodynes the Source 5 output with the 400 MHz reference signal (Assembly A4A8) to generate the 100 Hz to 109.9999 MHz output.

4.4 SYNTHESIZER DETAILED CIRCUIT DESCRIPTIONS

The following subparagraphs provide the detailed theory of operation and circuit analysis at the circuit level. These circuit descriptions are referenced to the schematic diagrams of the individual operational assemblies and plug-in PC Boards located in Chapter 7 of this manual.

4.4.1 AC Discriminator Assembly A4A1

The AC Discriminator Assembly receives the 10 MHz IF input from the 10 MHz VCO Assembly A4A2 which is applied to A4A1 pin W; then ac coupled via C27 to pin 1 of U3. Integrated Circuit U3 is an RCA CA3089E FM IF and Discriminator System that contains a three-stage if amplifier/limiter input, a doubly-balanced quadrature detector, an audio output amplifier and a delayed AGC output. The Discriminator output at U3 pin 6 is applied to differential amplifier U5 at input pin 3 via the bilateral switch U1A. The other input to U5 pin 2 is the reference bias from U3 pin 10 via the GAIN adjustment potentiometer R1. Amplifier U5 outputs the recovered audio at pin 6 to the PCB's pin M, to route it to the DC Discriminator Assembly A4A3. U5's output at pin 6 is also applied to the Operational Amplifier U4 at pin 2 and compared with the reference bias level from the fm detector (13-10) which is applied to U4 pin 3. The Operational Amplifier's time constant is determined by capacitor C24 (1 mFd) and resistor R14 (10 MΩ). The output at U4 pin 6 is applied to varicap CR1 to tune the L-C tank circuit comprised of CR1, C15, C17 and L3; forming an AFC circuit.

The AGC output at U3 pin 15 is applied via transistor driver Q2 to the Level Detector U2 input at pin 3 and to the PCB's output pin H as the AGC OUT signal. The Level Detector U2 will output the $\overline{\text{MUTE}}$ signal when the AGC signal level is greater than the level applied to U2 pin 2 by the Level Set potentiometer R18. Emitter followers Q4 and Q5 provide the drive to output the LEVEL DETECT (SQUELCH) signal. The $\overline{\text{MUTE}}$ signal is also applied to the bilateral switches U1A and U1C as

a control enable, which will select either the FM detector (signal present) or the Operational Amplifier's (squelch) output as the input to U5 pin 3. U4's output is fed back to its input via U5 to maintain the AFC voltage across CR1, when no signal is present.

4.4.2 10 MHz VCO Assembly A4A2

The VCO circuit is comprised of FET Q3 and its associated components, with varicap CR4 being its voltage/frequency tuning control device. The VCO circuit is enabled when the FM ENABLE signal is high at PCB input pin C which will apply a +15 V to the VCO FET Q3 and the VCO IC Amplifier (U3) via the enable circuit comprised of transistors Q1 and Q2. Integrated circuit U2 is a summing amplifier for the three frequency control signals; ERROR IN; FM MOD IN and FM CAL IN. The VCO control signal present at the output of the summing amplifier U2 pin 6 is applied to the varicap CR4 to modulate or offset the VCO OUT 10 MHz signal at PCB pin Y output. Integrated circuit U3 is a high-gain (80 dB) wideband (>20 MHz) amplifier/limiter, its output (U3 pin 4) is coupled via emitter follower Q9 to the VCO output at PCB pin Y which is applied to the Source 3 Assembly A4A6 pin S via a coax cable. The VCO output is also coupled to the IC Amplifier U4 via capacitors C22 and C33.

IF Amplifier U4 output at pin 4 is coupled via capacitor C37 to a buffer emitter follower circuit comprised of transistors Q5, Q7 and Q10 which provides the drive and fanout of the four IF signals to PCB output pins W, R, T and S. The VCO's output is also applied to emitter follower circuit comprised of transistors Q4 and Q6 which provide the drive for the 10 MHz IF to the AC Discriminator Assembly A4A1 via PCB pin 19. The IF IN signal applied to PCB pin U is enabled by the gate consisting of CR12, 13 and 14 when the RCVR ENABLE applied to PCB pin P is set at a logic low. The gate output is coupled by capacitor C23 to the IF Amplifier U4 and the emitter follower circuits Q4 and Q6 to provide the receiver IF as the output when the receiver mode is selected.

4.4.3 Source 2 Assembly A4A5

The Source 2 Assembly generates a 1.0000 to 1.9999 MHz output having 10 Hz discrete steps. Figure 4-3 provides a block diagram of the Source 2 functional operation.

The VCO circuit consists of FET Q1 and its associated circuit components. Varicap CR1 is the voltage/frequency controlling device, which is tuned by the voltage level that is generated by the phase detector integration amplifier U14. The VCO generates a 10.000 to 19.999 MHz signal having 1 kHz discrete steps which is fed to the ÷10 counter circuit (U1 pin 6). The ÷10 counter divides the VCO output frequency by 10 and outputs a 1.0000 to 1.9999 MHz signal in 100 Hz steps at U1 pin 5 as the SOURCE 2 OUTPUT signal which is applied to the PCB output connector pin E.

The VCO output is also applied to the ÷N counter circuits control logic IC (U3 pin 1) and the 10^2 decade programmable counter (U4 pin 6). The ÷N counter circuits divide this VCO output by an integer (N) that is programmed by the 1-2-4-8 BCD and the 10^2 through 10^5 decade strobes (these program control data signals are generated by the Time Base Divider A4A4 and relate to the frequency switch setting).

The ÷N counter outputs to the phase detector V input (U10 pin 3), where it is referenced to the 1 kHz reference signal applied to the R input (U10 pin 1). The phase detector responds only to negative transistions; hence, the phase error is independent of duty cycle or amplitude variations. The phase detector outputs, up (U) and down (D) at U10 pins 13 and 2, respectively, are applied to amplifier U14, and the resulting average level at U14 pin 6 is the phase difference error signal which is applied to the VCO to increase or decrease its frequency. The phase detectors

outputs will have short duration, low amplitude and negative pulse present on its output levels. When phase lock is achieved, the "AND" gate comprised of diodes CR5 and CR6 outputs a TTL logic high at PCB pins 13 and P which is the LOCK INDICATOR signal that is routed to the Time Base PCB Assembly.

When Options 06 and 07 are configured, a Source 2 PCB Assembly, Part No. 06700501, replaces the standard A4A5 Assembly. Refer to paragraph 4.5.6 for its circuit description.

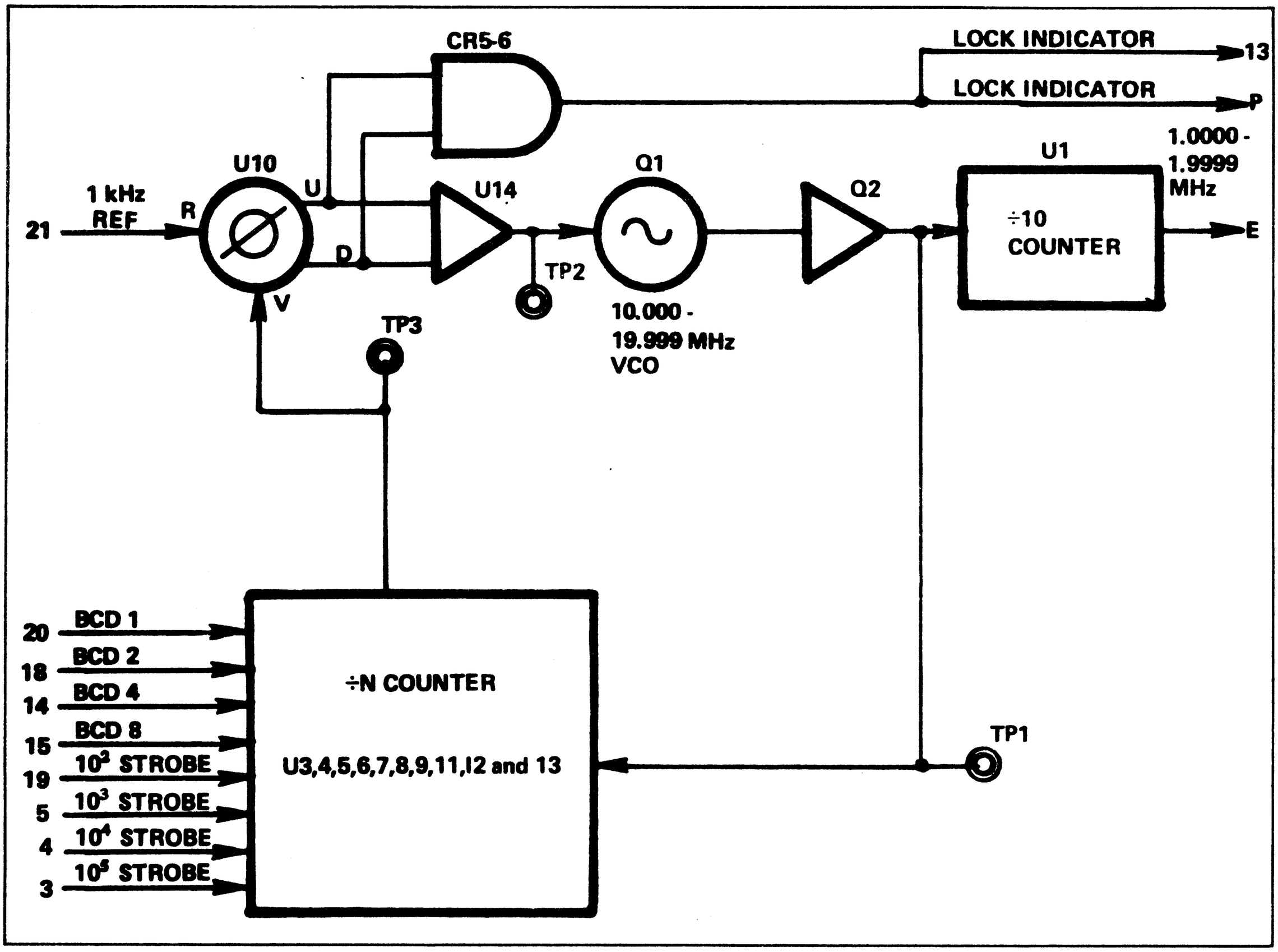

FIGURE 4-3 A4A5 SOURCE 2 FUNCTIONAL BLOCK DIAGRAM

4.4.4 Source 3 PBC Assembly A4A6

The Source 3 Assembly is a VCO which utilizes a mixer in its phase-lock loop to generate an output of 11.0000 to 11.9999 MHz. Its input is the 1.0000 to 1.9999 MHz Source 2 signal which is heterodyned with the 10 MHz REF signal when the CW mode is selected, or the 10 MHz VCO (FM IN) signal when the FM mode signal is selected. The mixers output is the phase-lock reference for the applied Source 2 input. Figure 4-4 provides a block diagram of the Source 3 functional operation.

The 1.0000 to 1.9999 MHz Source 2 signal is applied to the phase detector at its V input (U3 pin 9 via PCB connector pin 5. The reference input to the phase detector (U3 pin 6) is the mixers output (U2 pin 13) which is applied via the

external PCB connection between PCB connector pins B and C. The phase detector outputs, Up and Down signals at U3 pins 12 and 3, respectively, are applied to the integrating amplifier U4 and the resulting average level at U4 pin 6 is the phase difference error signal which is applied to the VCO via the external PCB connection between PCB connector pin R and V. The phase detectors pins 12 and 3 outputs will remain high when the reference and the variable input negative transitions coincide; thus, indicating a phase-lock. When phase-lock is achieved, the AND gate (CR7 and CR6) outputs a TTL logic high via driver U5 to PCB pins P and 13 which is the LOCK INDICATOR signal which is routed to the Time Base PCB Assembly.

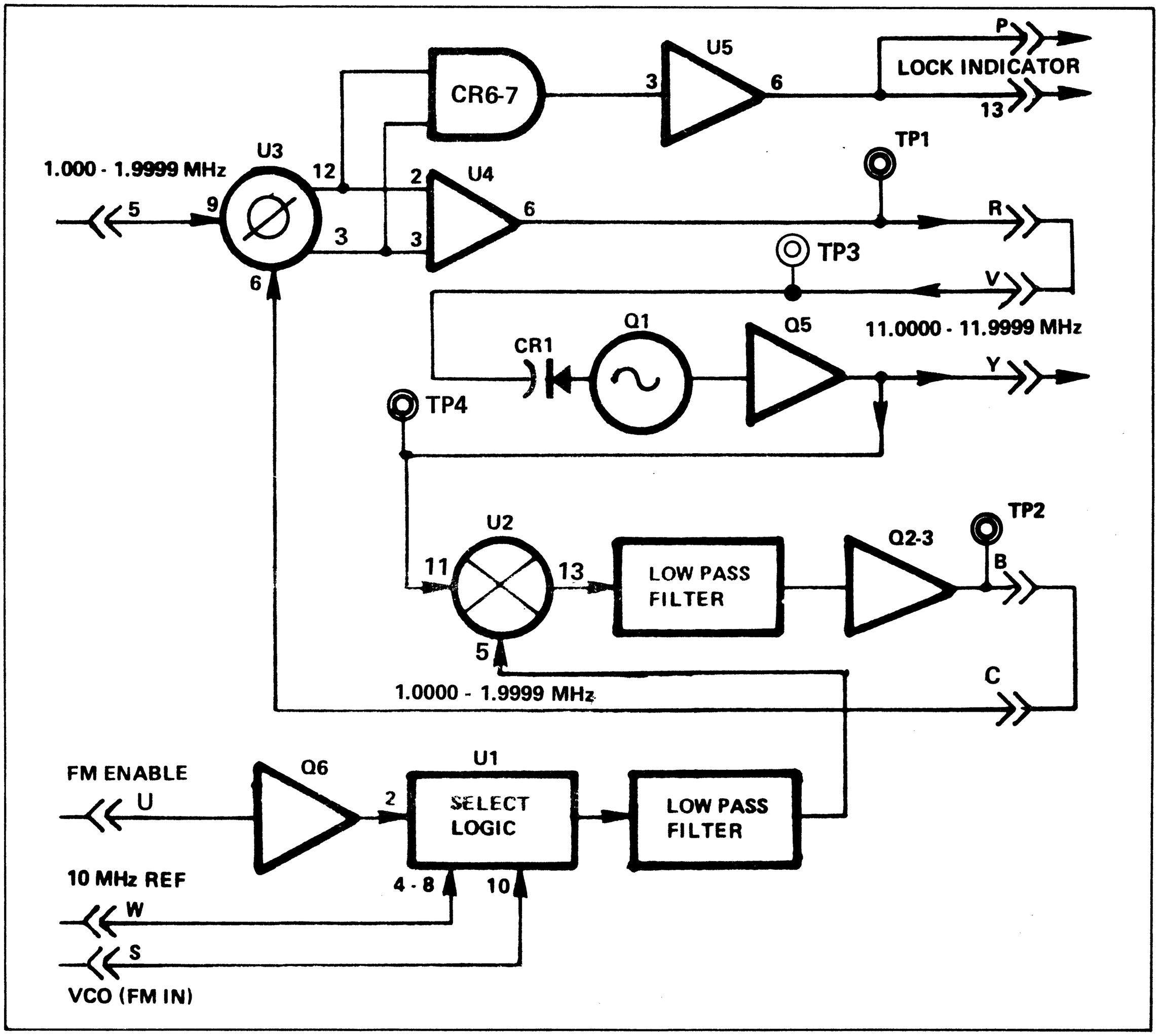

FIGURE 4-4 A4A6 SOURCE 3 FUNCTIONAL BLOCK DIAGRAM

The VCO 11.0000 to 11.9999 MHz output is applied via transistor driver Q5 to the mixer input U2 pin 11 and to the PCB connector pin Y, which is the Source 3 output.

The Mixer U2 heterodynes the VCO output applied to U2 pin 11 with the 10 MHz REF or the VCO (FM IN) signal applied to U2 pin 5. The mixer output at U2 pin 13 is

routed via the low pass filter (L6, L7, C18, C19 and C20), to the transistor driver (Q2 and Q3) and the external connection between PCB connector pins B and C to the phase detector input at U3 pin 6.

Integrated Circuit U1 provides the selection logic. This allows selection of either the 10 MHz REF input at PCB connector pin W or the VCO (FM IN) signal at PCB connector pin S.

When the CW or AM mode is selected by the Front Panel pushbutton switches, the FM ENABLE at PCB connector pin U is set to a logic low; thus, enabling the 10 MHz REF as the input to the mixer via the low pass filter comprised of L4, L5, C13, C14 and C15. When the FM mode is selected by the FM pushbutton switch, the FM ENABLE at PCB connector pin U is set to a logic high and the VCO (FM IN) signal is enabled.

4.4.5 Source 4 Assembly A4A11

Source 4 generates a 99 to 988 MHz signal which is applied to the Mixer PCB Assembly A4A16 via the output coax connector J1, and a 99 to 494 MHz signal at coax connector J2 which is applied to the Divide-By-N PCB Assembly A4A10. The Source 4

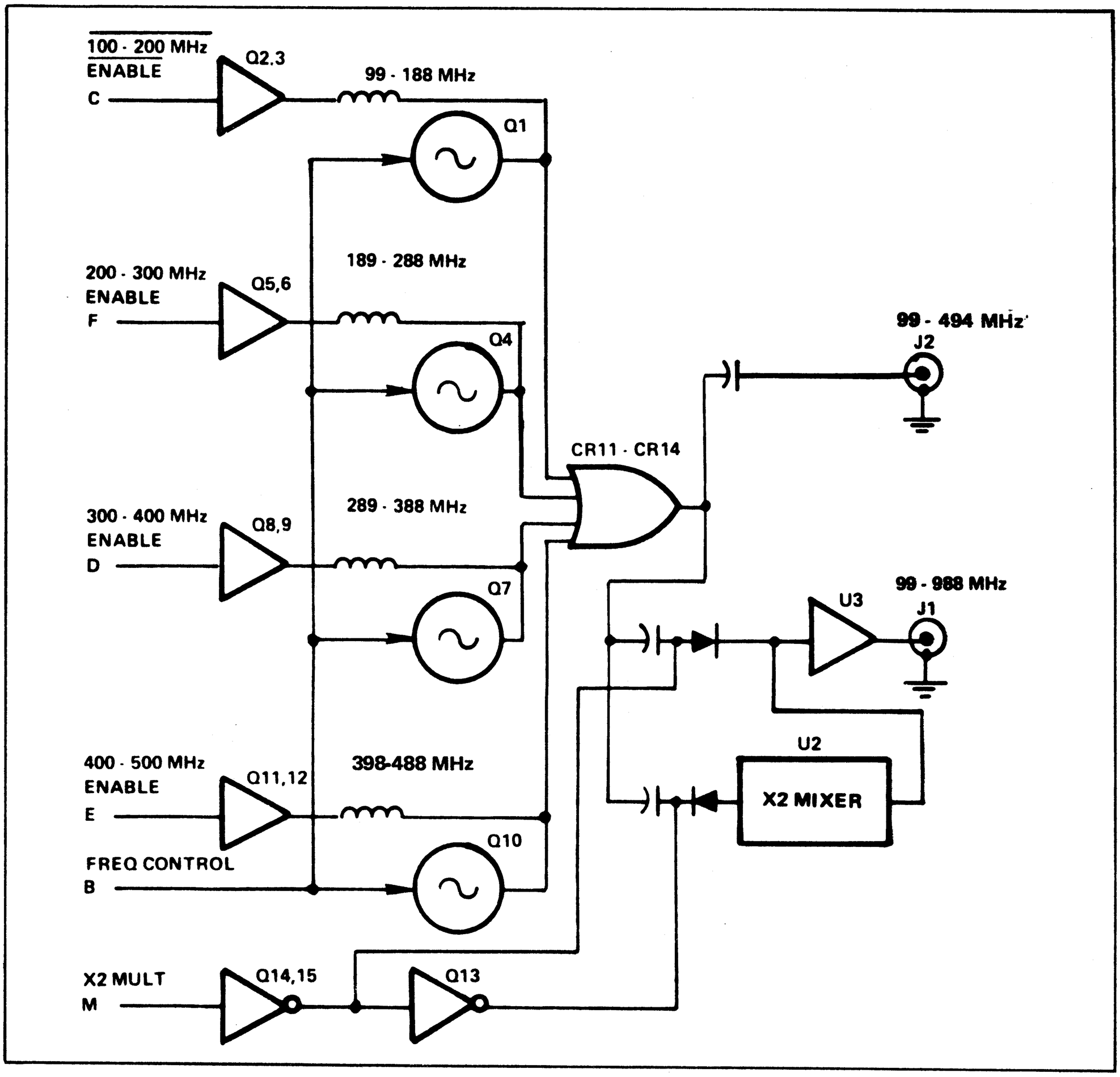

FIGURE 4-5 A4A11 SOURCE 4 FUNCTIONAL BLOCK DIAGRAM

frequency generation is by the four FET VCO's which are selected by the proper enable signal from the Logic PCB Assembly A4A9. The selected VCO is tuned by the FREQUENCY CONTROL signal from the Divide-By-N PCB Assembly A4A10. Figure 4-5 provides a block diagram of the Source 4 functional operation.

The four VCO's are configured by FET's Q1, Q4, Q7 and Q10 and their associate circuit components, and are tuned by the FREQUENCY CONTROL signal applied to PCB connector pin B from the Divide-By-N PCB Assembly A4A10. The proper VCO is enabled when an ENABLE signal is applied to its associated transistor switch circuit, which in turn applies +15 V to the FET's drain. The enabled VCO output is applied to the PIN diode "OR" gate comprised of diodes CR11 through CR14.

The PIN diode "OR" gate supplies two output signals: (1) the 99 to 494 MHz signal at coax connector J2 to the Divide-By-N Assembly A4A10, and (2) PIN diode "OR" gate output is applied via capacitors C12 and C13 to the PIN diode X2 multiplier switch circuit. When the X2 signal from the Logic Assembly A4A9 is set to a logic low at PCB connector pin M, the X2 switch circuit consisting of Q13, Q14 and Q15 will enable PIN diode switch CR16 and disable PIN diode switch CR15, allowing the VCO output to be applied to the output driver U3 via the X2 mixer circuit U2; thus, doubling the VCO output frequency. When the X2 signal at PCB connector pin M is placed at a logic high, PIN diode CR15 is enabled and PIN diode CR16 is disabled; thus, inhibiting the frequency doubler function. Amplifier driver U3 outputs the 99 to 988 MHz Source 4 signal to the Mixer Assembly A4A16 via coax connector J1.

4.4.6 Source 5 Assembly A4A13

The Source 5 Assembly generates a 110.0000 to 999.9999 MHz signal which is supplied to the Amplifier Assembly A4A14 via coax connector J1 and to the Mixer Assembly via coax connector J2. Figure 4-6 provides a block diagram of the Source 5 functional operation.

The Source 5 output signals are generated by one of the five VCO's comprised of Q1 through Q3 and Integrated Circuit U1 and their associated components. The proper VCO is selected by its enable signal from the Logic Assembly A4A9. When the 100 to 140 MHz ENABLE is placed at a logic high at PCB connector pin B, the enable switch circuit Q6 and Q13 will place +15 V on diode CR4, which will enable the VCO Q1 and apply a 110.0000 to 139.9999 MHz signal via the 150 MHz low pass filter to the "OR" gate CR23 input diode. When the 140 to 200 MHz ENABLE is set high at PCB connector pin C, the enable switch circuit Q7 and Q14 will apply +15 V to diode CR5, which will enable the VCO Q1 and apply a 140.0000 to 199.9999 MHz signal via the 200 MHz low pass filter to the 'OR' gate CR22 input diode. When the 200 to 300 MHz ENABLE is set low at PCB connector pin D, the enable switch circuit Q8 and Q15 will apply a +15 V to VCO Q2 allowing the generation of a 200.0000 to 299.9999 MHz signal, which is applied to the 'OR' gate diode CR21 input. The 300.0000 to 399.9999 MHz VCO Q3 is enabled by a logic low applied to the PCB connector pin E via the enable switch circuit comprised of Q9 and Q16, and allows a VCO output to CR18 of the 'OR' gate via the 400 MHz low pass filter. When the 400 to 600 MHz ENABLE is placed at a logic low on PCB connector pin V, the VCO U1A will be enabled via switch circuit Q10 and Q17 and output a 400.0000 to 599.9999 MHz signal to the 'OR' gate input CR19 via the 600 MHz low pass filter R60 and C35. The 600.0000 to 999.9999 MHz VCO U1B is enabled by a logic high at PCB connector pin W via the switch circuit Q11 and Q18, allowing its signal to be outputted via 'OR' gate CR20.

The LOW BAND CONTROL is generated by the Phase Detector A4A12 Assembly and applied to PCB connector pin H. This signal will tune the selected low band VCO Q1 through U1A to the selected frequency. The TRACKING signal applied to pin F by the Divide-

By-N Assembly prevents the Q1 oscillator from locking onto the Source 4's second harmonic when the selected frequency is at the low end of the oscillators range.

The HIGH BAND CONTROL generated by the Phase Detector A4A12 Assembly is applied to PCB connector pin X to tune the high band VCO U1B.

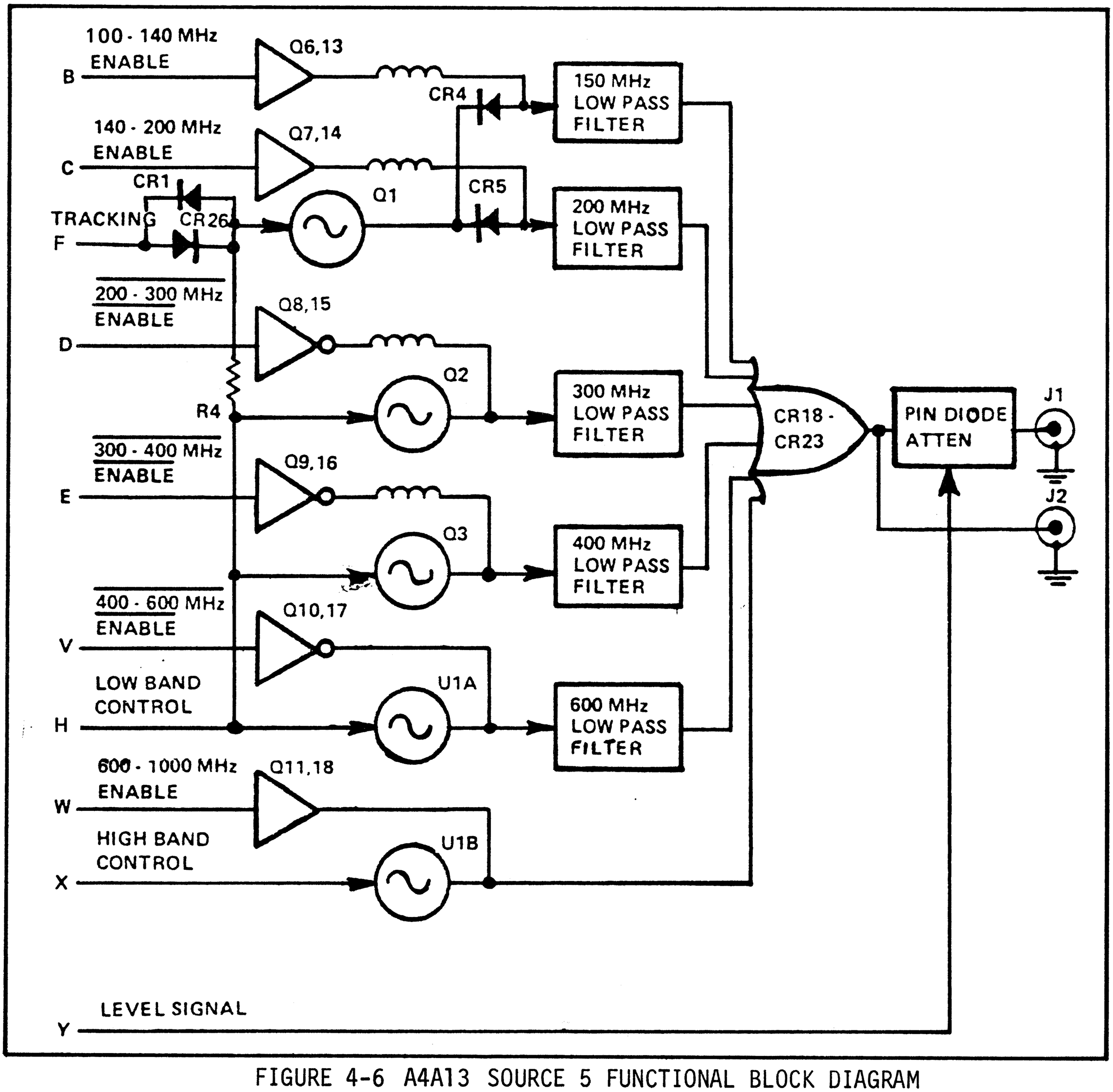

FIGURE 4-6 A4A13 SOURCE 5 FUNCTIONAL BLOCK DIAGRAM

The "OR" gate outputs the 110.0000 to 999.9999 MHz signal to coax connector J2 via capacitor C32. The other output of the "OR" gate coupled by capacitor C28 is applied to the PIN diode variable attenuator circuit which controls the output at coax connector J1. The attenuation is controlled by the LEVEL SIGNAL applied to PCB connector pin Y. This leveled 110.0000 to 999.9999 MHz signal output at J1 is applied to the Amplifier Assembly A4A14.

4.4.7 Control Logic Assembly A4A9

The Control Logic Assembly A4A9 receives the frequency 1-2-4-8 BCD code and the 10^6, 10^7 and 10^8 Strobes from the Time Base Assembly A4A4 which relate to the Front Panel Frequency switch settings. Also applied to the Assembly at pin C is the $\overline{\text{RCVR}}$ (RCVR ENABLE) Signal which will provide a 10 MHz offset of the Synthesizer output when it is used as a Local Oscillator in the Received Mode. Figure 4-7 provides a Function Block Diagram of the Control Logic Assembly operation.

The Logic Assembly outputs a 12-line 10^6 through 10^8 BCD program to the Divide-By-N Assembly A4A10. The VCO ENABLE signals are also generated to the Source 4 and Source 5 Assemblies (A4A11 and A4A13; the Source 4 X2 MULT signal; the 400 MHz REF ENABLE and the LEVELER SWITCH signal to the amplifier Assembly A4A14).

The 1-2-4-8 BCD Frequency code is applied to the three 4-bit TTL latches (U4, U5 and U6). When the 10^6 STROBE is applied to the 10^6 latch (U4), the BCD data present at the inputs is transferred to the $\overline{Q}$ outputs as a true when the strobe goes high. When the strobe goes low, the data (present at the inputs at the time the transition occurred) is retained at the Q output as its complement (true). The 10^7 latch U5 and the 10^8 latch U6 function in a like manner.

Transistors Q1 through Q12 function as TTL to ECL translators and feed the B inputs of the 10^6, 10^7 and 10^9 NBCD (natural binary coded decimal) adders (U1, U2 and U3). These adders are CMOS IC's operated at -5.2 V (V_{SS}) and ground (V_{DD}) to allow their outputs to be ECL compatible with the Divide-By-N Assembly A4A10 logic.

The codes applied to the adders' (U1, U2 and U3) A inputs by hard wiring and the RCVR ENABLE signal correspond to the 9's complement of one when in the RCVR mode and to the 9's complement of 11 when in the $\overline{\text{RCVR}}$ mode. The adding of the 9's complement is equivalent to subtracting in binary arithmetic. Thus, the output BCD ÷N code is programmed to a frequency that is 1 MHz (RCVR) or 11 MHz ($\overline{\text{RCVR}}$) lower than the Frequency switch settings. This frequency offset is required so that the Source 4 difference frequencies will be correct.

The 10^7 4-bit latch (U5) BCD outputs are decoded by logic gates U8A, U8C, U8D and U7A to allow determination of the <140 MHz and >400 MHz frequency selection.

Integrated circuit U13 is a TTL BCD to decimal decoder. Its logic allows full decoding of valid input data that ensures that all the decimal outputs will remain off for any invalid input condition. The BCD 4-bit input is supplied from the Q outputs of the 10^8 Latch U6. The 0 through 9 decimal outputs are applied to the gating logic to allow generation of the VCO enable signals and Synthesizer control functions.

The gating logic generates the enable and control signals by identifying the 10^8 decimal outputs of the U3 decoder. Table 4-9 provides a listing of the Logic Assembly outputs as to function and routings.

TABLE 4-10 LOGIC ASSEMBLY OUTPUT CONTROL SIGNALS

A4A9 ASSEMBLY PIN NUMBER	FUNCTION	TO ASSEMBLY PIN NUMBER
5	10^6 BIT 1	A4A10-E
4	10^6 BIT 2	A4A10-D
3	10^6 BIT 4	A4A10-C
2	10^6 BIT 8	A4A10-B

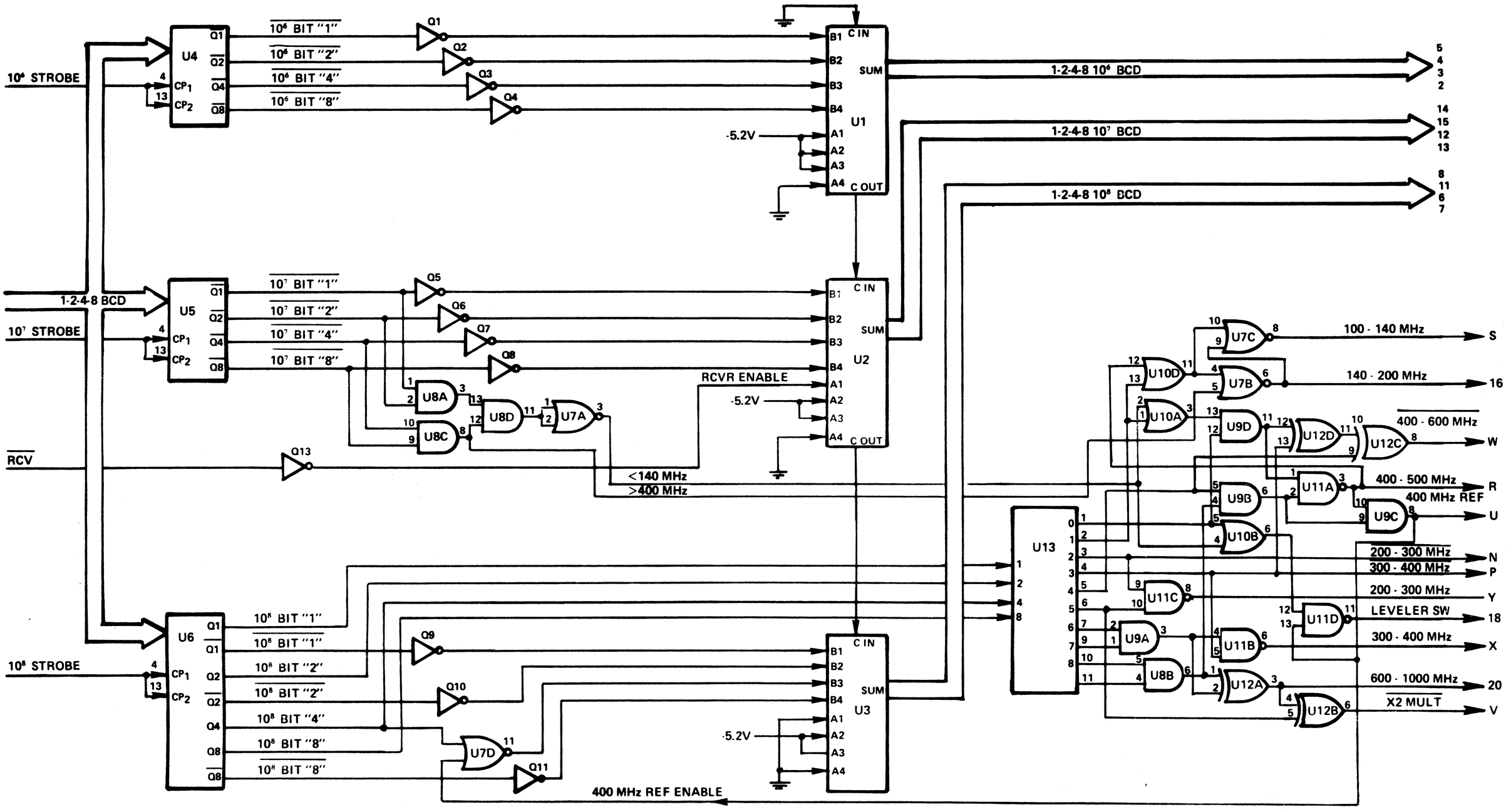

Figure 4-7 A4A9
Control Logic Assembly
Functional Block Diagram

TABLE 4-10 LOGIC ASSEMBLY OUTPUT CONTROL SIGNALS (Cont'd)

A4A9 ASSEMBLY PIN NUMBER	FUNCTION	TO ASSEMBLY PIN NUMBER
14	10^7 BIT 1	A4A10-R
15	10^7 BIT 2	A4A10-S
12	10^7 BIT 4	A4A10-N
13	10^7 BIT 8	A4A10-P
8	10^8 BIT 1	A4A10-J
11	10^8 BIT 2	A4A10-M
6	10^8 BIT 4	A4A10-F
7	10^8 BIT 8	A4A10-H
S	100-140 MHz SOURCE 5 ENABLE	A4A13-B
16	140-200 MHz SOURCE 5 ENABLE	A4A13-C
17	$\overline{\text{100-200 MHz SOURCE 4 ENABLE}}$	A4A11-C
W	400-600 MHz SOURCE 5 ENABLE	A4A13-V
R	400-500 MHz SOURCE 4 ENABLE	A4A11-E
U	400 MHz REF AMPLIFIER ENABLE	A4A8-12
18	LEVELER SWITCH	A4A14-X
N	200-300 MHz SOURCE 5 ENABLE	A4A13-D
P	$\overline{\text{300-400 MHz SOURCE 5 ENABLE}}$	A4A13-E
Y	200-300 MHz SOURCE 4 ENABLE	A4A11-F
X	300-400 MHz SOURCE 4 & PHASE DETECTOR ENABLE	A4A12-B A4A11-D
20	600-1000 MHz SOURCE 5 ENABLE	A4A13-W
V	X2 MULT SOURCE 4 ENABLE	A4A11-M A4A10-T

4.4.8 Divide-By-N Assembly A4A10

The Divide-By-N Assembly, divides the 99 to 494 MHz Source 4 signal by an integer (N) which is programmed by the 10^6 through 10^8 BCD from the Control Logic Assembly A4A9. The three-decade ÷N Counter outputs its count to the Phase Detector (U8) where it is referenced to the 1 MHz reference or the 0.5 MHz reference. The Phase Detector (U8) outputs are then applied to the Integrator (U9) to generate the Frequency Control signal for the Source 4 VCO's and the Frequency Tracking signal for the Source 5 VCO's. Figure 4-8 provides a functional block diagram of the Divide-By-N Assembly operation.

The Divide-By-N Counter utilizes the two-modulus prescaler techniques. Source 4 is prescaled (divided) by Counter U1 (the basic mode of operation of the prescaler being ÷10). The two-modulus prescaler starts in the ÷11 mode. The logic comprised of gates U3 and latch U5 provide the control for the prescaler and its effective "Frequency Extension" of the three decade ÷N Counter (U2, U4 and U6). The Q outputs of the 10^6 N divider U2 is gated by U3-3 and applied to the Prescaler U1 at pin 2 as the ÷11/÷10 dual modulus control (M). The 10^8 ÷N Divider U6 outputs are gated with the Q outputs of U4 at U3 pin 15; thus, generating the ÷N count which is applied to the Phase Detector VAR input (U8 pin 1) via amplifier U10-4.

The Phase Detectors REF input applied to U8 pin 3 is either the 1 MHz TIME BASE via PCB pin V or the 0.5 MHz REF applied at PCB pin W when the X2 MULT signal at PCB pin T is present. A SHAPED 1 MHz OUT is also developed at U7-3 and applied to the Time Base Assembly A4A4 and the 400 MHz Reference Assembly A4A8 via PCB pin U.

The Phase Detector outputs are applied to Integrator Amplifier U9 which outputs the FREQ CONTROL signal to Source 4 Assembly A4A11 at PCB pin Y, and the FREQ TRACKING

signal to the Source 5 Assembly A4A13 at PCB pin 21. When the VAR and REF signals applied to the Phase Detector are "In-phase" the Phase Detectors outputs are set to a logic high with extremely short duration low amplitude negative pulses, and "AND" gate comprised of CR3 and CR4 will output the TTL LOCK signal at PCB pin X.

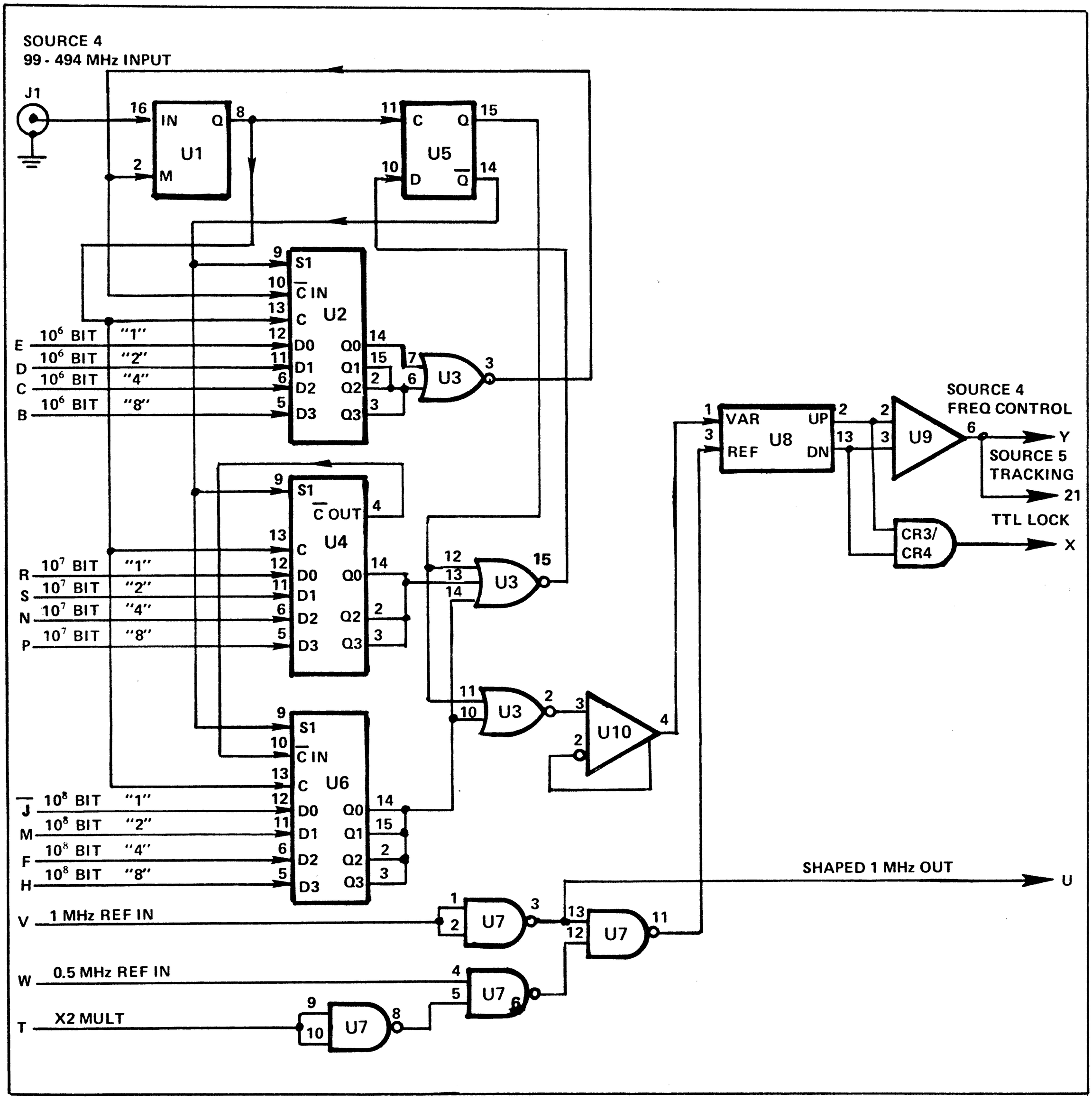

FIGURE 4-8 A4A10 DIVIDE-BY-N ASSEMBLY FUNCTIONAL BLOCK DIAGRAM

4.4.9 400 MHz Reference Generator Assembly A4A8

The 400 MHz Reference Generator Assembly generates the 400 MHz REF signal for the Amplifier Assembly A4A14; the 10 MHz REF signals for the Source 3 Assembly A4A5; and the DC Discriminator Assembly A4A3. A 400 MHz VCO (Q2), a chain of divider counters U1, U2 and U3, and a phase detector U4 provides the basic phase lock loop (PLL) of the 400 MHz Reference Generator. Figure 4-9 provides a functional block diagram of the Assembly.

The 400 MHz VCO is comprised of FET Q2 and its associated R-C-L components. Varicap CR1 provides the tuning element of the VCO and is tuned by a voltage level from the phase detector integration amplifier U5. Its output at Q2 pin 2 is coupled by capacitor C5 to the ÷10 Counter U1, and to the output amplifier Q3 by capacitor C6.

The collector of Q3 outputs the 400 MHz REF signal via a low pass filter circuit (C8, C9, L5 and L6) and a diode switch circuit (CR2 and CR3) to coax connector J1. When the 400 MHz ENABLE signal applied to PCB pin 12 is set high, the diode switch consisting of CR2 and CR3 is enabled via transistors Q4 and Q5 providing an output at connector J1. Transistor Q5 also outputs the AMPL RELAY ENABLE signal to the Amplifier Assembly A4A14 via PCB pin 14.

The output applied to divider chain is divided by 10 by U1 supplying a 40 MHz signal to the ÷4 counter U2. Counter U2 counts down the 40 MHz signal to 10 MHz. The output at U2 pin 7 is applied to the Source 3 Assembly via PCB pin 16 and the DC Discriminator Assembly via PCB pin 18 as the 10 MHz REF output signals. Counter U2 also outputs a 10 MHz at U2 pin 9 to the ÷10 Counter U3 input at pin 14. Counter U3 counts down the 10 MHz to 1 MHz and outputs it at U3 pin 8 to the Phase Detectors VAR input (U4 pin 3).

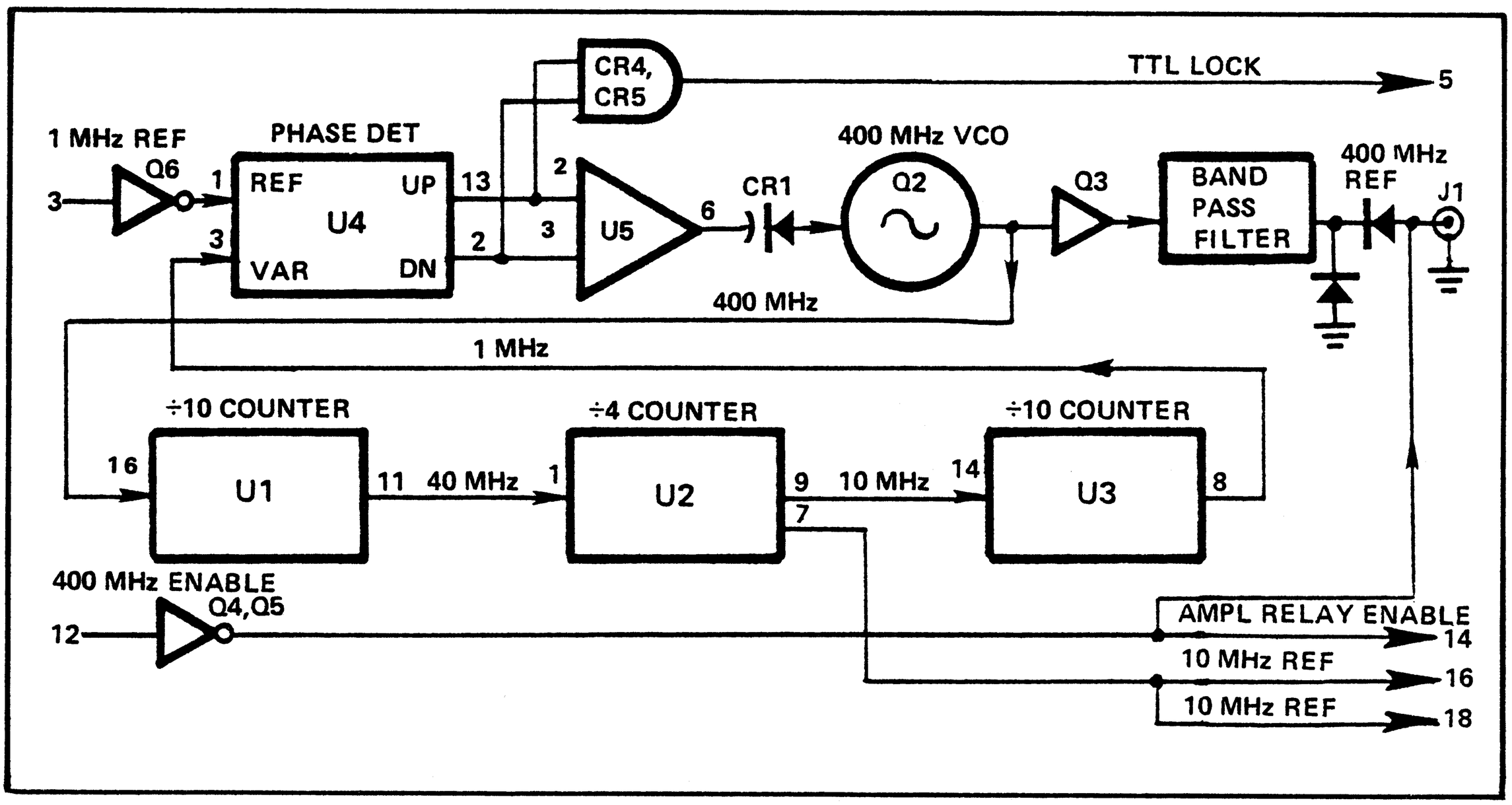

FIGURE 4-9 A4A8 400 MHz REFERENCE GENERATOR FUNCTIONAL BLOCK DIAGRAM

The Phase Detector compares the phase difference of the 1 MHz applied to its REF input (U4 pin 1) with the 1 MHz VAR input, (U4 pin 3) and outputs the UP and DN resultants to Integrating Amplifier U5. Amplifier U5 generates the VCO tuning level at its output pin 6 which is applied to the VCO varicap CR1; thus, providing a closed 400 MHz PLL referenced to the 1 MHz time base signal. When the PLL is phase locked, the outputs at U4 pins 13 and 2 are at a logic high with extremely short duration, low amplitude, negative pulses, which are AND gated by diodes CR4 and CR5 to generate the TTL LOCK signal which is applied to PCB pin 5 as a phase lock indicator output.

4.4.10 Phase Detector Assembly A4A12

The Phase Detector Assembly generates the HIGH BAND FREQUENCY CONTROL and the LOW BAND FREQUENCY CONTROL signals which tune the enabled VCO (one of five) of the Source 5 Assembly. The Source 3 Assembly 11.0000 to 11.9999 MHz output is compared with the Mixer Assembly A4A16 output by the phase detector circuit, and if a large frequency difference is detected, the search generator circuit will output a tuning voltage in the form of a ramp. This ramp signal will drive the selected Source 5 VCO to the correct frequency; thus, producing a phase lock. When phase lock is achieved, the ECL LOCK signal is generated to indicate that the Synthesizer's PLL's are locked and the Source 5 Assembly is outputting the desired frequency to the A4A14 Amplifier Assembly. Figure 4-10 provides a block diagram of Phase Detector functional operation.

The 11.0000 to 11.9999 MHz output of the Mixer A4A16 is applied to PCB pin Y and routed to the R input of the Phase Detector (U4) via the 20 MHz Low Pass Filters (C11, C12, C20, L1 and L2) and Amplifiers U1, U2 and U3. Amplifier U5 provides a pickoff of the Mixer signal for the Amplitude Detector circuit.

The Source 3 11.0000 to 11.9999 MHz output is applied to the V input of U4 via PCB pin M input and Amplifier U3.

If the frequency difference <20 MHz (which may occur when phase lock is lost), the signal at U2 pin 5 will be insufficient to allow the peak detector (CR1 and CR2) to generate a level of >0 Vdc at U5 pin 2. U5 will then saturate in the positive direction allowing CR5 to conduct. The current from diode CR5 will buck and override the output current of U6, allowing the voltage at U7 pin 6 to fall off at a rate determined by resistor R20 and capacitor C27. When the voltage at U7 pin 6 drops to >+1 Vdc, CR7 diode will conduct causing U6 pin 6 to saturate in the negative direction turning on diode CR6. The current through CR6 will rise at a rate determined by resistor R19 and capacitor C27. Potentiometer R21 is adjusted to allow U7 pin 6 to rise to a level of +2 Vdc, and U6 pin 3 to rise to a voltage that is greater than the level on U6 pin 2; causing U6 pin 6 to saturate and reverse bias diode CR6. The ramp generator circuit comprised of U6 and U7 will ensure that phase lock will be eventually attained, even if the voltage at U7 pin 6 initially drives in the wrong direction (as occurs when the Source 5 output frequency is initially lower than the Source 4 output frequency).

When the PLL is locked, diode CR5 (signal applied to pin Y >20 MHz) and diode CR6 will be reverse biased. This allows the Search Generator output U7 pin 6 to be controlled by the Phase Detector U4 via Operational Amplifier U9. When the Mixer and the Source 3 inputs are in phase, the Phase Detector will lock up the loop and an ECL LOCK signal will be generated by AND gate CR3, 4 and applied as an output at PCB pin 8. The RAMP LIMIT ENABLE signal applied to PCB pin B is generated by the Logic Assembly A4A9 to enable the ramp limit function of the Search Generator circuit, when the 300 to 400 MHz Source 4 VCO is enabled; thus, preventing the Source 5 600 to 999.9999 MHz VCO from locking on to the Source 4 harmonics when tuned to the low end of its range.

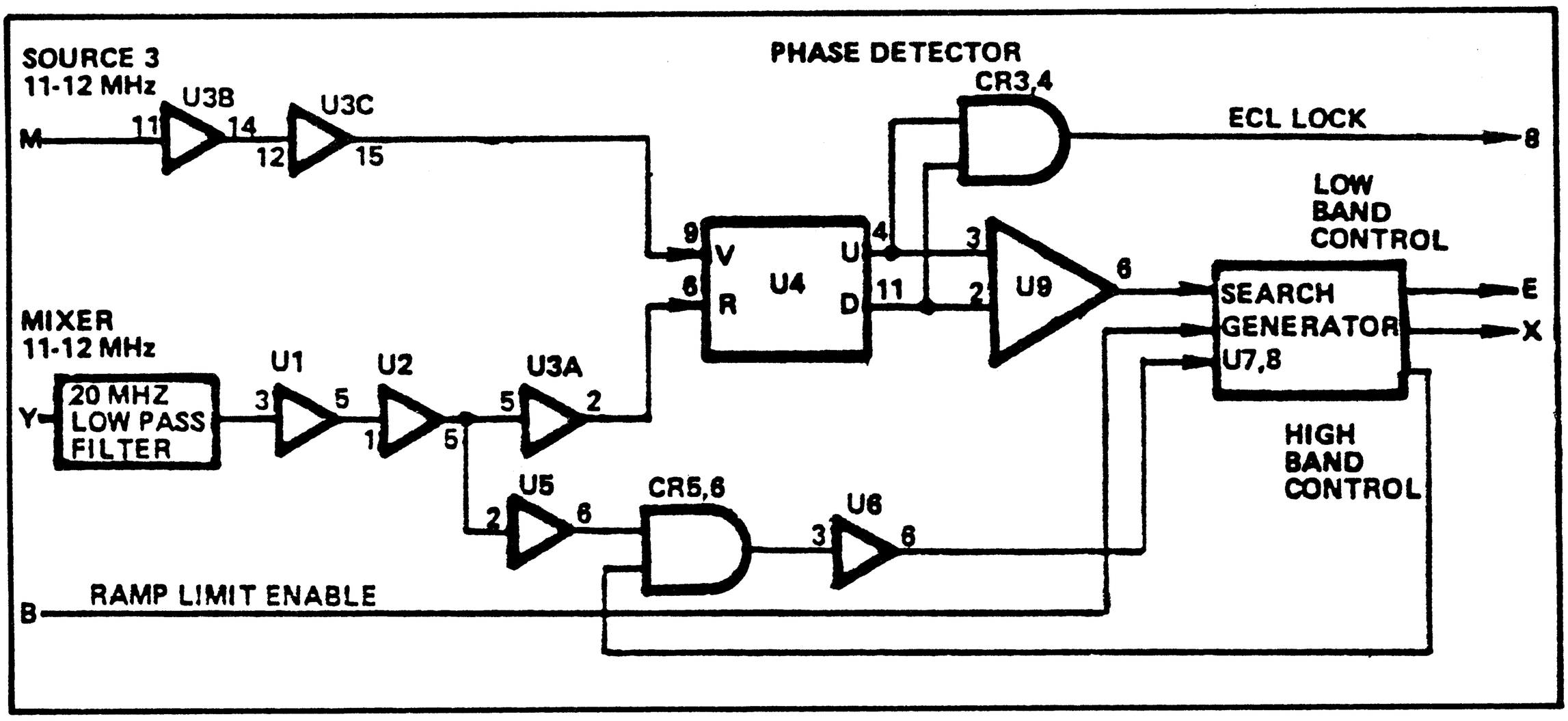

FIGURE 4-10 A4A12 PHASE DETECTOR ASSEMBLY FUNCTIONAL BLOCK DIAGRAM

4.4.11 Mixer Assembly A4A16

The Mixer Assembly heterodynes the Source 4 Assembly A4A11, 99 to 988 MHz output with the Source 5 Assembly A4A13, 110.0000 to 999.9999 MHz output to generate an if output of 11.0000 to 11.9999 MHz which is applied to the Phase Detector Assembly A4A12. The Source 5 input is applied to coax connector J1. It is amplified by the IC wideband rf amplifier U1 and then applied to the IC Mixer U2 at its input pin 1. The Source input is applied to the IC Mixer input pin 8 via coax connector J3. The if output at U2 pins 3 and 4 is connected to coax connector J2 which supplies the 11.0000 to 11.9999 MHz signal to the Phase Detector Assembly A4A12.

4.4.12 Amplifier Assembly A4A14

The Amplifier Assembly provides three functions: the leveling and amplitude modulation of the Synthesizer output, and the heterodyning of the Source 5 output with the 400 MHz Reference Signal. Figure 4-11 provides a functional block diagram of the Amplifier Assembly operation.

The Source 5 110.0000 to 999.9999 MHz output is applied to coax connector J1 and then routed via a PIN Diode Attenuator circuit (CR1, 2 and 3) to the wideband IC Amplifier (U1). Transistor Q1 and associated components constitute a class A amplifier circuit whose bias is regulated by transistor Q2 which outputs to coax relay K1. When the 400 MHz Reference Relay is de-energized, the leveled 110.0000 to 999.9999 MHz Synthesizer output is routed directly to the output coax connector J3. Coax connector J3 is the Synthesizers rf output and is applied to the Output Attenuator Assembly U1 via A4J21.

When the Synthesizer is selected to operate below 110 MHz, the Source 5 output frequency is 400 MHz higher than the frequency selection. The Source 5 signal applied to coax connector J1 is routed via the PIN Diode Attenuator and amplified by U1, Q1 and Q2, and then applied to the Mixer at U4 pin 1 via PIN Diode CR4. PIN diode CR4 is enabled by the RELAY SWITCH SIGNAL applied to PCB pin Y (+15V level) whenever the frequency settings are selected for 110 MHz or less. The +15V RELAY SWITCH SIGNAL

also pulls down Relay K1 which disconnects transistor Q 2 output from coax connector J3 and provides collector current to enable transistor Q10. Transistor Q10's input is the 400 MHz signal from Assembly A4A8 and outputs to the Mixer U4 pin 8. The frequency difference output of the Mixer U4 at pins 3 and 4 is a signal having a frequency of the thumbwheel switch settings, which is applied to a dc coupled amplifier consisting of U5, Q7, Q8 and Q9. Feedback capacitor C27 ensures that U5 responds only to dc and extremely low frequency ac signals. The amplifier's ac gain is stabilized by negative feedback from Q9's collector to the base of Q8 via the network consisting of C30, R42, R43 and R46. Transistor Q9's output is applied to coax connector J3 via the closed coax contact of energized Relay K1. Relay K1's (normally open)auxillary contact supplies collector current to Q9 when the relay is enabled.

The rf output at connector J3 is peak detected by diode CR8. The detected signal is then applied through diode CR10 to U2 pin 3. Operational Amplifier U2 compares the detected output envelope with the signal applied to PCB pin T. This signal (AM MOD) is a negative voltage level set by the Front Panel Level vernier control, which includes the amplitude modulation envelope if AM Modulation has been selected. U2's output (pin 6) controls the PIN Attenuator comprised of diodes CR1, 2 and 3. U2 pin 6 is also connected to the PCB output pin B which will extinguish the Front Panel LEVELED indicator when U2 saturates to indicate that maximum/minimum PIN Attenuation has been reached. U2 pin 6 is also coupled to integrating amplifier U3 input pin 2. The output of U3 at pin 6 is applied to the PIN Attenuator on the Source 5 Assembly A4A13 via PCB pin C as the SOURCE 5 LEVELING SIGNAL.

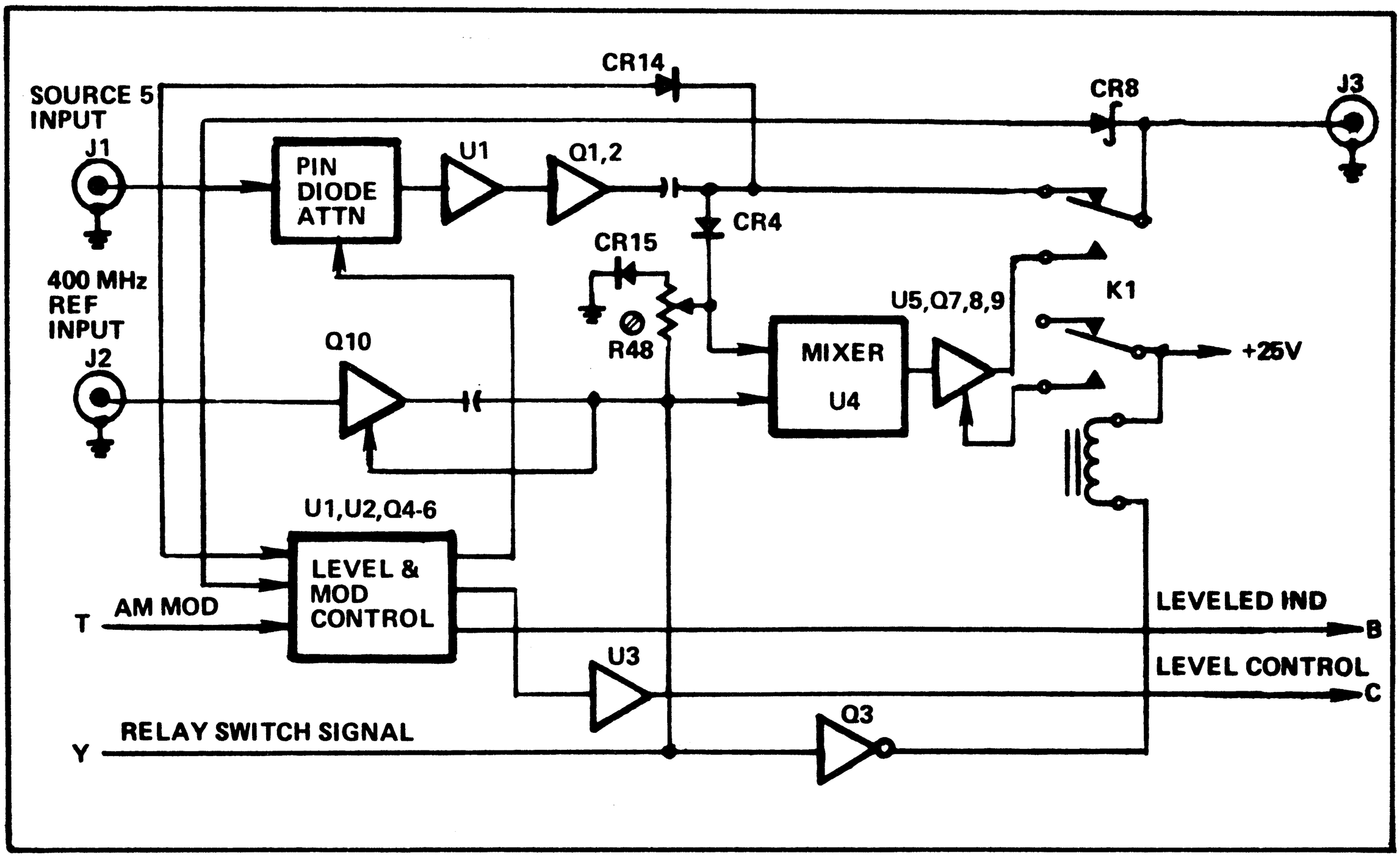

FIGURE 4-11 A4A14 AMPLIFIER ASSEMBLY FUNCTIONAL BLOCK DIAGRAM

The PIN attenuator on the Source 5 PCB Assembly sets the average rf output level, and the PIN attenuator on the Amplifier Assembly is controlled primarily by the amplitude modulation. At output frequencies >10 MHz (where CR8's detector time constant can cause problems), diode CR14 is used to drive the control input to the leveling circuit. CR14 detects the signal at Q1, Q2 output which is 400 MHz higher than the output frequency. Since the amplitude response of U4, U5, Q7, Q8 and Q9 is flat in the 100 Hz to 9.9999 MHz range, effective output leveling is achieved.

4.4.13 Time Base Generator Assembly A4A4

The Time Base Generator A4A4 generates the 1-2-4-8 BCD Frequency Code and the 10^2 through 10^8 strobes. For selection of the Synthesizer's frequency, it's necessary to use either the Frequency Switch A3A1 or the Frequency Control A3A4. These Assemblies (A3A1 and A3A4) interface with the Time Base Generator via the A-B-C Strobes, and provides the BCD code frequency selection. The Time Base Generator also generates the 0.5 MHz, 10 kHz and 1 kHz reference signals for the Synthesizer operation. Figure 4-12 provides a functional logic diagram of the A4A4 operation.

The 1 MHz Reference, from the Reference Oscillator Assembly A5 via the shaper circuit located on Assembly A4A10, is applied to pin 15 and translated to a TTL square wave by transistor Q1; then routed via CMOS buffer/inverter U1-2 to the Time Base Counter input U2 pin 2. The Time Base Counter is configured as a four decade BCD count chain and outputs the following reference signals:

1. 10 kHz, pin 21
2. .5 MHz, pin 14
3. .1 MHz, pin 19
4. .001 MHz, pin Y (STD)
5. .1 MHz, pin Y (Options 06 and 07)
6. 1 kHz, pin 20

The X-L, X-R jumper wire configuration allows for selection of .001 MHz Source 2 reference (X-L) when Options 06 and 07 are not installed; a .1 MHz Source 2 reference (X-R) when Options 06 and 07 are installed.

The three Strobes are applied to either A3A1 or A3A4, for encoding to the selected frequency and are returned as the 1-2-4-8 Code. The frequency code returned at pins 8, 11, M and 12 is buffered by CMOS inverters U4A through U4D and TTL inverters U5A through U5D. They are supplied as outputs at pins X, V, R and S to the Source 2 A4A5 and Control Logic A4A9 Assemblies.

The A, B and C strobes generated by U3B are also applied to the 10^2 through 10^8 strobe generator U6, at its A-B-C inputs. The U6-"D" input is generated by U9-9. Dual one-shot multivibrators U9A and U9B are triggered by the Q4 output of U3A pin 6. U6 is a TTL BCD-to-decimal decoder which outputs the 10^2 through 10^8 strobe signals. These decade strobes are buffered and applied as outputs to the Control Logic A4A9 and the Source 2 A4A5. (Refer to Figure 4-12 for the output pinning callouts.)

The LOCK (TTL) and LOCK (ECL) signals that are applied to pins P and T are AMPLIFIED by Drivers U11 and U12 to output the LOCKED signal at pin N. The LEVELED signal applied to PCB pin 7 from A4A14 is amplified by Driver U10 and outputs as the LEVELED signal at pin 6. When the voltage at pin 7 is less than -7 Vdc, CR6 will conduct, causing U10 pin 6 to saturate in the plus direction, which will extinguish the LEVEL Indicator. When the voltage at pin 7 <+8 Vdc, CR7 conducts and CR8 is reversed biased. This causes U10 to oscillate at a rate determined by C8, R19 and R20 and will, in turn, flash the LEVEL Indicator on and off. When the voltage at pin 7 is between -7 and +8 Vdc, neither CR6/CR7 conducts. U10 pin 6 will saturate in the minus direction; thus, illuminating the LEVEL Indicator.

4.4.14 DC Discriminator Assembly A4A3

The DC DISCRIMINATOR operates in INT/EXT FM and in Receive. It compares the IF input to the reference 10 MHz from the 400 MHz board. U1 is a Decade Counter, its input is 10 kHz from the time base board. The output is a 10 line decade output of which four are used. Outputs 5 and 10 go the sections A and B of the Quad Switch U8. Outputs 2 and 7 are to U2. U2 outputs two 1 kHz signals, 180° out of phase, to U3. This signal alternately turns on each half of U3. U3 is a Dual Differential Amp. When enabled, each half amplifies its input. Pin P is the reference and 19 is the VCO or Receive IF. The alternating outputs then go to U4, a limiting amp. U5 is basically an FM Discriminator. Pin 6 is the Audio Output. Pins 7-10-9-8 are used with U6 to tune the Tank Circuits L6, CR4 and C24, C25. It changes tuning at a 1 kHz rate. During one cycle it is tuned to the reference and the next it is tuned to the variable IF. The output pin 6 is then a 1 kHz pulsed DC, proportional to the frequency difference. U7 is an AC coupled Op. Amp with a gain of 10. R18 is used to calibrate the output gain of U7. The output pulse from U7 is loaded into C34 by output 5 of U1 through section A of U8. The charge time of C34 by output 5 of U1 through section A of U8. The charge time of C34 is fast but the discharge time is slow so that it holds a DC charge equal to the frequency error. When the unit is unmuted U8C has 5 V on pin 5 switching the error voltage to U9. When the unit is muted U8C opens and Q3 puts 5 V on U8D. This causes the input to U9 to go to ground and the output to go 0 V with no audio on the error line.

The recovered audio is gain adjusted in the AC DISCRIMINATOR to be equal to the audio in the DC DISCRIMINATOR at C34. When equal on each side of C34, the audio has no DC average across C34 and does not effect the DC error voltage. The DC error voltage and audio is sent back to the VCO to keep it from drifting from its setting, and to the upper and lower trays to drive the scope plug-in and to the meter driver board.

The audio is decoupled in the meter driver and amplified to drive the speaker.

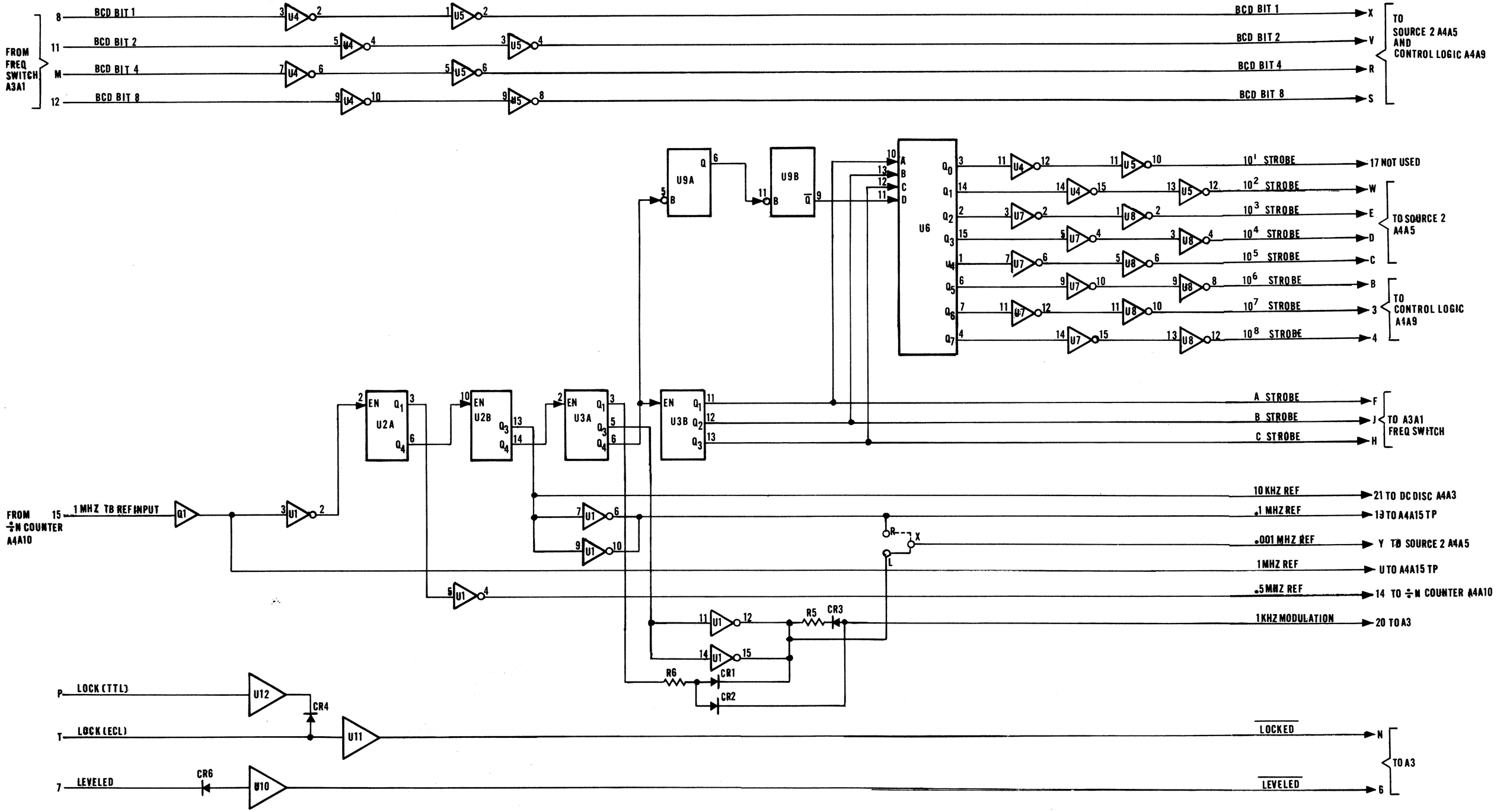

Figure 4-12 A4A4
Time Base Generator
Assembly Logic Diagram

4.5 DETAILED CIRCUIT DESCRIPTIONS FOR A3A1, A3A2, A3A3, A3A4, A3A5 and A5

The following subparagraphs provide the detailed theory of operation and circuit analysis at the component level. These circuit descriptions are referenced to the schematic diagrams of the appropriate assembly located in Chapter 7 of this manual.

4.5.1 Frequency Switch Assembly A3A1

The Frequency Switch receives its A, B and C address signals from the Time Base Generator A4A4 via connector/plug assembly J9/P9 pins 2, 4, and 7, respectively. This three-bit binary input is decoded to an octal (one-of-eight) code by integrated circuit U1. These U1 outputs are the 10^2 through 10^8 Frequency Switch address Enable Signals which are applied to the seven Frequency Switch elements at their common connections (pins Y). Each of the Frequency Switch elements outputs a BCD 1-2-4-8 code which is equal to its 'dialed in' frequency setting. The seven Frequency switch element BCD outputs are combined by the "OR" gates comprised of diodes CR1 through CR28 to generate the 1-2-4-8 BCD frequency code which are returned to the Time Base Generator A4A4 via connector/plug assembly J9/P9 pins 5, 8, 9 and 6, respectively.

4.5.2 Display Assembly A3A2

The Display Assembly plugs into the Mother Assembly A3 via an edge connector and interfaces with the Front Panel window to provide display of the modulation in am percentage or fm deviation in kHz on a four-digit seven-segment LED display.

Three LED annunciators (DS5, DS6 and DS7) interface with the Modulation Control A3A3 to provide indication of the selected modulation mode and unit of measurement of the four-digit display. The REM LED annunciator DS8 illuminates when the Model 1702 is under remote control via an IEEE-488 Interface. Two LED status indicators DS9 and DS10 provide LOCK and LEVEL status of the Synthesizer operation.

The INPUT signal, an analog voltage level that relates to the percentage of am or the deviation in kHz of fm, is applied to A3A2 edge connector pin 20, from pin 3 of A3A2U1, the Vx input of the 24 pin DVM DIP IC.

Integrated circuit U1 is a type MC14433 CMOS 3-1/2 digit A/D converter that functions as a complete digital voltmeter system, less the display circuits. A reference voltage of +2.00 is developed by zener VR1 and the voltage divider network comprised of R1 through R4, which is applied to U1 pin 2 (V_{REF}) input. U1 pin 1 (V_{AG}) is connected to ground to provide a zero volt reference for Vx and (V_{REF}) inputs. U1 pin 24 (V_{DD}) is placed at +5.1 V by zener VR2.

The A/D converter of U1 performs a ratiometric conversion using a modified dual slope integration technique. That is, it compares the input analog at Vx and measures it as a ratio of the reference voltage.

The external components connected to the 24 pin DVM DIP U1 provides for operational parameters of the DVM system. R6 and C5 connected to pins 4, 5 and 6 provide for setup of the A/D conversion factors; the 470 kΩ value of R6 determines the integrator conversion cycle which is ≈250 ms. C4 connected between pins 7 and 8 is an offset correction capacitor which provides the systems auto-to-zero operation to compensate the offset voltages of the internal amplifiers and comparators. R7 connected between pins 10 and 11 determines the frequency of the internal clock oscillator, the 330 kΩ value of R7 results in a clock frequency of ≈66 kHz.

Integrated circuit U1 outputs a digit select as logic high when the respective digit is selected on pins 16 through 19. The MSD on pin 19 (1/2 digit) turns on immediately after the EOC pulse (pin 14) followed by the remaining digits, sequenced from MSD to LSD. An inter-digit blanking time of two-clock periods is provided to ensure that the BCD output data has settled. The multiplex rate is equal to the clock frequency ÷80 or 0.8 kHz. Figure 4-13 provides a timing diagram of the digit select signals relative to the EOC signal.

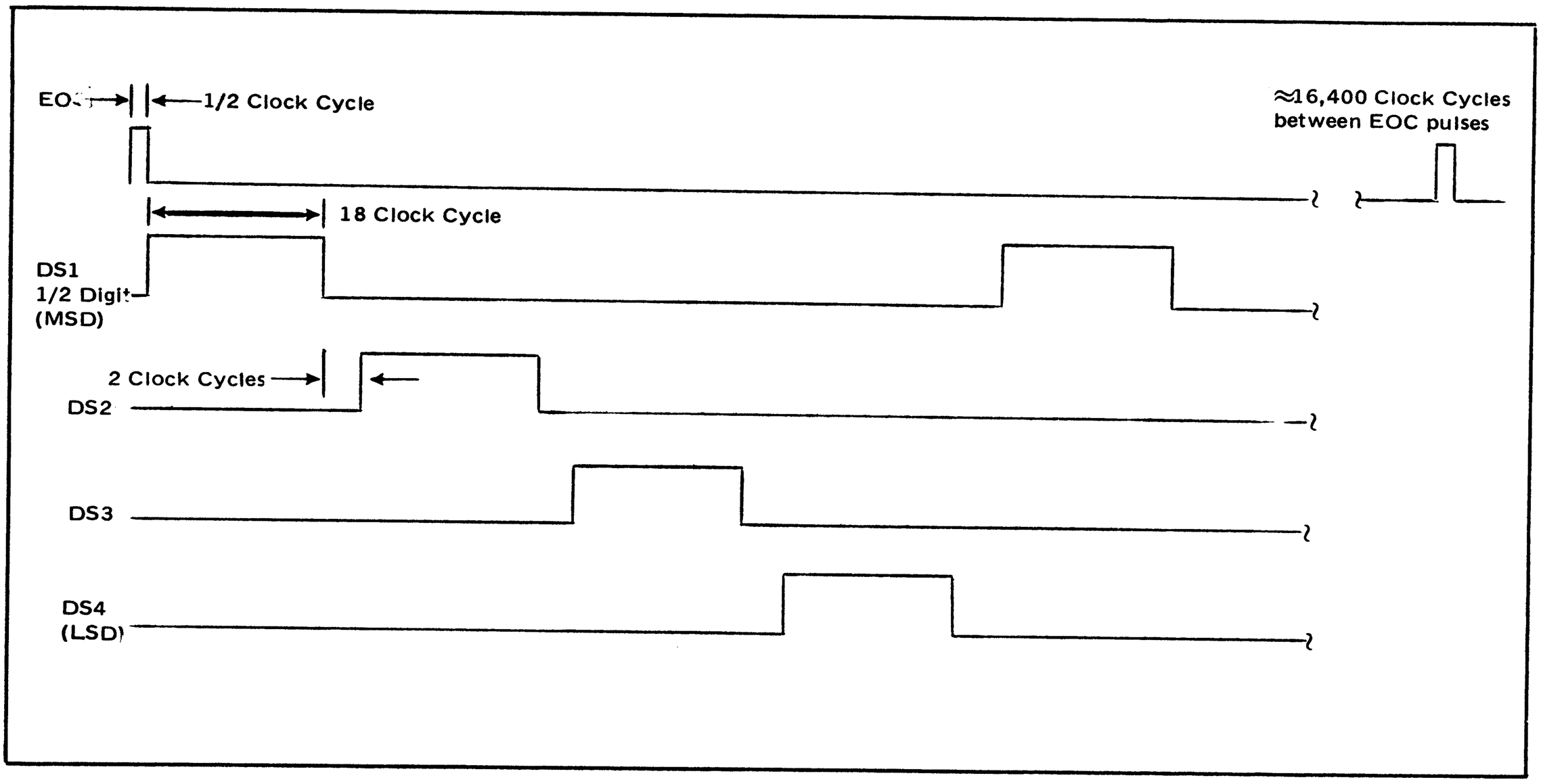

FIGURE 4-13 DIGIT SELECT TIMING DIAGRAM

The data output is BCD format containing 3-1/2 digits and is presented as a 1-2-4-8 logic high on pins 16 through 19. The BCD data is applied to U2 a type SN74LS247N BCD-to-seven segment decoder/driver. U2 receives its 1-2-4-8 data inputs on pins 7, 1, 2 and 6, respectively, and outputs the seven segment drive to the four Seven Segment LED Display elements DS1, DS2, DS3 and DS4. Display element DS1, the 1/2 digit MSD, has its "c" and "b" inputs fed in parallel via R17 and R18 from the "b" output of U2 (pin 12); generating a display of a digital "1".

When the DVM system is overranged, the display will flash on and off at a rate of ≈0.5 seconds. This is done by connecting the EOC (U1 pin 14) and $\overline{OR}$ (U1 pin 15) and counting it down by a factor of two (÷2) by D flip-flop U3 and blanking the display using the $\overline{BI}$ input of the BCD-to-Seven Segment Decoder (U2 pin 4).

When the CW mode is selected, a logic low is set on the $\overline{BI}$ input of U2 to inhibit the Seven Segment drive to the four LED display elements; blanking the display.

4.5.3 Modulation Control Assembly A3A3

The Modulation Control A3A3 provides two major functions: the routing, selection and conditioning of the modulation signals, and the generation of the MOD SIGNAL for the digital display of the modulation characteristics.

The INT MOD signal is a 1 kHz digital clock that is sourced from the Synthesizer at A4 pin 5 and applied to A3A3 pin A via Mother PCB transistor A3A3Q2 and the Front Panel INTERNAL Modulation control R26. The INT MOD signal input is then applied via potentiometer R19 (INT) to the sine wave shaper circuit comprised of U2, Q2 and their associated RC components. The 1 kHz sine wave is coupled by C3 to U2 pin 10 and the source of FET Q7.

The circuit comprising U2, Q4, Q5 and associated RC components provides the drive for the 1 kHz output at A3A3 pin 2 to the Front and Rear Panel 1 kHz OUT BNC connectors to provide a 0 to 2 V peak 1 kHz sine wave into a 50 Ω load.

The EXT MOD signal is sourced from the Front Panel EXT MOD BNC connector J3 via the EXTERNAL Modulation Front Panel control R27 or directly from the Rear Panel EXT MOD BNC connector J7; then applied to A3A3 pin 1 as the EXT MOD IN signal. The EXT MOD IN signal is then applied via potentiometer R15 (EXT) to the source of FET Q6.

The Front Panel MOD SOURCE switch S1 interfaces with the modulation source select logic via A3A3 pins M and K, to allow selection of the modulation source. When INT modulation is selected, U2 pin 6 is pulled down by R13 to a logic low and U2 pin 3 is pulled down to a logic low by R14, which will turn on FET Q7 and turn off FET Q6; thus, selecting the internal 1 kHz as the modulation source. When BOTH is selected, U2 pin 6 is set to logic low and U2 pin 3 is set to a logic high, which will turn on both FET's Q6 and Q7; allowing both external and internal modulation sourcing. When EXT modulation is selected, U2 pin 6 and pin 3 are both set to a logic high, which will turn on FET Q6 and turn off FET Q7 which will select the external modulation source. When the Signal Generator is operating in the remote mode (IEEE STD-488 GPIB), a logic high REMOTE command is set on A3A3 pin L, which will effect an external modulation source selection, that overrides the Front Panel MOD SOURCE switch selection.

The Mother Board mounted MODULATION MODE switch S3 interfaces with the modulation mode select gates U1 through A3A3 pins C, 4 and F. When FM is selected, A3A3 pin C is set to a logic high which will generate an FM command at A3A3 pin 5 by turning off transistor Q3. This FM command at A3A3 pin 5 is pulled up by Mother Board mounted R22 to +5 V and applied to the Display Assembly A3A2 pin F to illuminate the FM-kHz annunciator A3A2DS5 and to the Synthesizer A4 pin 16 as an FM ENABLE signal. When CW is selected, A3A3 pin 4 is set to a logic high which will generate a $\overline{CW}$ command at A3A3 pin J by turning on transistor Q2. This $\overline{CW}$ command at A3A3 pin J is applied to the Display Assembly A3A2 pin J to illuminate the CW annunicator A3A2DS7 and blank the 3-1/2 digit numerical display to indicate an unmodulated (cw) Signal Generator output. When AM is selected, A3A3 pin F is set to a logic high which will turn on FET's Q9 and Q11; thus, enabling the AM function and outputting the AM OUT signal at A3A3 pin 13. An AM command will also be generated as a logic high at A3A3 pin 6, which is applied to the Display Generator is operating in the remote mode (IEEE STD-488 GPIB), a logic low $\overline{REMOTE}$ command from the Amplitude Control Assembly A3A5 pin 3 is applied to selected side of the MODULATION MODE switch S3 to disable the local Front Panel selection of the modulation mode. Remote (Option 07) selection of the modulation mode is by the REMOTE AM, CW or FM signal(s) applied to the Modulation Control Assembly A3A3 pins D, E or 3, respectively.

The Modulation signal selected by the modulation source logic and enabled by FET's Q6 and Q7 is applied across potentiometer R37 the DISPLAY CAL adjustment. The modulation signal is then picked off the swinger of potentiometer R26 and applied to a full-wave peak detector comprised of U5, U6 and Q10 and their associated passive components. The peak detection circuit generates an analog level that relates to the modulation characteristics (percent of modulation when AM is selected and deviation in kHz when FM is selected). The DET NULL adjustment R41 is provided to null out any offset of the level detection circuits input amplifier. The DISP NULL adjustment R55 is provided to zero the DVM display (located on the Display Assembly A3A2) when no modulation is applied; thus, nullifying out any dc level offset of the level detector output. When AM is selected, FET Q11 will turn on; thus configuring the divider network consisting of R51 and potentiometer R52 AM DISPLAY adjustment for am-% modulation. The MOD SIGNAL at A3A3 pin 20 is an analog level that is scaled to provide a DVM reading that relates to % of AM or deviation in kHz of FM.

4.5.4 Clock Oscillator Assembly A5

The Clock Oscillator Assembly A5 allows Rear Panel switch selection of the internal oscillator or an external source of 1 MHz, 2 MHz, 5 MHz or 10 MHz as the 1 MHz time base for the Synthesizer that is appleid to coax connector A4J22.

Three different Clock Oscillator Assemblies may be installed in the Model 1702 Signal Generator. These three different A5 Assemblies allow for the standard 1 MHz oscillator, the Option 01 3 MHz High Stability Oscillator or the Option 02 4 MHz TCXO Oscillator to be used. The following circuit description relates to all three of the A5 assemblies.

When the Rear Panel CLOCK SOURCE switch S4 is placed in its INT position, a +5 V is applied to A5 pin 6 and removed from A5 pin 8, which will inhibit external

clock gate U1-3 and enable the internal clock gate U1-2 (U1 is a Quad 2-Input ECL NOR gate having internal input pull-down resistors). The internal clock is applied from the oscillator as a sine wave and translated to an ECL compatible digital clock by transistor Q2 and its associated circuit components; then applied to U2 programmable counter via gate U1-2. The counter's divider modulus is equal to the programmed inputs on D_0, D_1, D_2 and D_3 +1 (M = N + 1). When the 1 MHz (Standard) oscillator is used, the D_0, D_2 and D_3 inputs are set open and the counter's modulus is one. When the 3 MHz (Option 01) oscillator is used, D_1 input is placed at +5 V via CR10 and the counter is programmed to a modulus of three. When the 4 MHz (Option 02) oscillator is used, D_0 and D_1 inputs are placed at +5 V via CR9 and CR10 and the counter is programmed to a modulus of 4.

When the Rear Panel CLOCK SOURCE switch S4 is placed in its EXT position, a +5 V is applied to A5 pad 8 and removed from A5 pad 6, which will inhibit the internal clock gate U1-2 and enable the external clock gate U1-3. The external clock is applied from the Rear Panel EXT CLK IN BNC connector J6 and translated to an ECL compatible digital clock by transistor Q1 and its associated circuit components; then applied to the counter U2 via gate U1-3.

When the EXT CLOCK MHz switch S5 is placed in its 1 MHz position and the CLOCK SOURCE switch S4 is placed in its EXT position, the D_0, D_1, D_2 and D_3 inputs of counter U2 (pins 12, 11, 6 and 5) are set to open states (OV), and the counter is programmed for a modulus of 1 and will accept a 1 MHz external clock and output a 1 MHz clock at its $\overline{C}$ out output pin 4.

When the EXT CLOCK MHz switch S5 is placed in its 2 MHz position and the CLOCK SOURCE switch S4 is placed in its EXT position, the D_0 input of the counter U2 pin 12 is set at +5 V via CR8. The counter is programmed for a modulus of 2 and will accept a 2 MHz external clock and output a 1 MHz clock at its C out output at pin 4.

When the EXT CLOCK MHz switch S5 is placed in its 10 MHz position and the CLOCK SOURCE switch S4 is placed in its EXT position, the D_0 and D_3 inputs of the counter U2 pins 12 and 5 are set at +5 V via diodes CR5 and CR6. The counter is then programmed for a modulus of 10 and will accept a 10 MHz external clock and output a 1 MHz clock at its $\overline{C}$ out output at pin 4.

The counter C out output U2 pin 4 is applied to the B input pin 5 of the one-shot U3 via gate U1 and Q3. The one-shot Q output (U3 pin 6) is applied to the Rear Panel 1 MHz OUT BNC connector J5 per A5 pad 10, and its complement at U3 pin 1 the Q output is applied to the Synthesizer TB INPUT A4J22 via A5 pad 11. The pulse width of the 1 MHz outputs of U3 is 0.5 µs and is determined by the timing capacitor C5 and resistor R13.

4.5.5 Frequency Control Assembly A3A4 (Options 06 and 07)

With Option 06 included, the Model 1702 can be operated remotely with IEEE STD-488 GPIB as to selection of the output frequency and status reporting. To implement Option 06, a 24-pin connector labeled IEEE-488 PROG and 5-digit ADDRESS switches S6 through S10 are installed on the Rear Panel of the instrument. The Rear Panel connector and address switches interconnect through A3 to the plug-in Frequency Control PCB A3A4. Assembly A3A4, in turn, interfaces with A3A3, A3A5 and A4 Assemblies via A3; and A3A1 per the A3A1P9 captive Cable/Plug. Refer to Figure 4-1 Functional Block Diagram for reference to the above description.

Figures 4-14 through 4-17 and Figure 7-60 (three sheets located in chapter 7) describe the functional logic contained on the A3A4 Assembly. The A3A4 logic circuits are formatted into three subfunctions that will be described separately and are identified as follows:

1. Input/Output Interface Logic
2. Handshake Logic
3. Programming Logic

Functional definitions for a number of device dependent local message mnemonics and commands used in this manual are listed below:

DI1 through DI7 - Data Input bits 1 through 7.

DO1 through DO7 - Data Output bits 1 through 7.

DACO - Data Accepted Out.

DAVI - Data Valid In.

GTL - Go to Local.

CTLC - Control Character.

GTR - Go to Remote.

RFDI - Ready for Data In.

RFDO - Ready for Data Out.

COMP or ADD COMP - Address Compare

TALK - Transmit Data.

MLA - My Listen Address.

MTA - My Talk Address.

PO - Power On.

UNL - Unlisten.

UNT - Untalk.

WAIT - Hold Transmission of Data.

RO - ASCII Row 0.

R10 - ASCII Row 10.

R13 - ASCII Row 13.

R14 - ASCII Row 14.

R15 - ASCII Row 15.

C0 - ASCII Column 0.

C2 - ASCII Column 2.

C3 - ASCII Column 3.

C4 - ASCII Column 4.

C5 - ASCII Column 5.

NOTE

Certain local message mnemonics are conveyed as remote message mnemonics and vice versa. These mnemonics and commands may be either true or false. A false logic state is identified by a "not bar" over its statement. Negative true logic is employed out on the IEEE-488 Interface Bus. However, once signals pass through the bus transceivers, the logic levels revert to standard positive true logic.

The interface and handshake functions implemented are defined by IEEE STD-488 subsets. Following is a listing of the subset configurations of the Model 1702 Signal Generator's GPIB:

SH1	Source Handshake, Full	LE0	Extended Listener, None
AH1	Acceptor Handshake, Full	SR0	Service Request, None
T8	Talk, Basic Talker, Unaddressed if MLA	RL2	Remote Local, No LL0
		PP0	Parallel Poll, None
TE0	Extended Talker, None	DC0	Device Clear, None
L4	Listen, Basic Listener, Unaddressed if MTA	DT0	Device Trigger, None
		C0	Controller, None

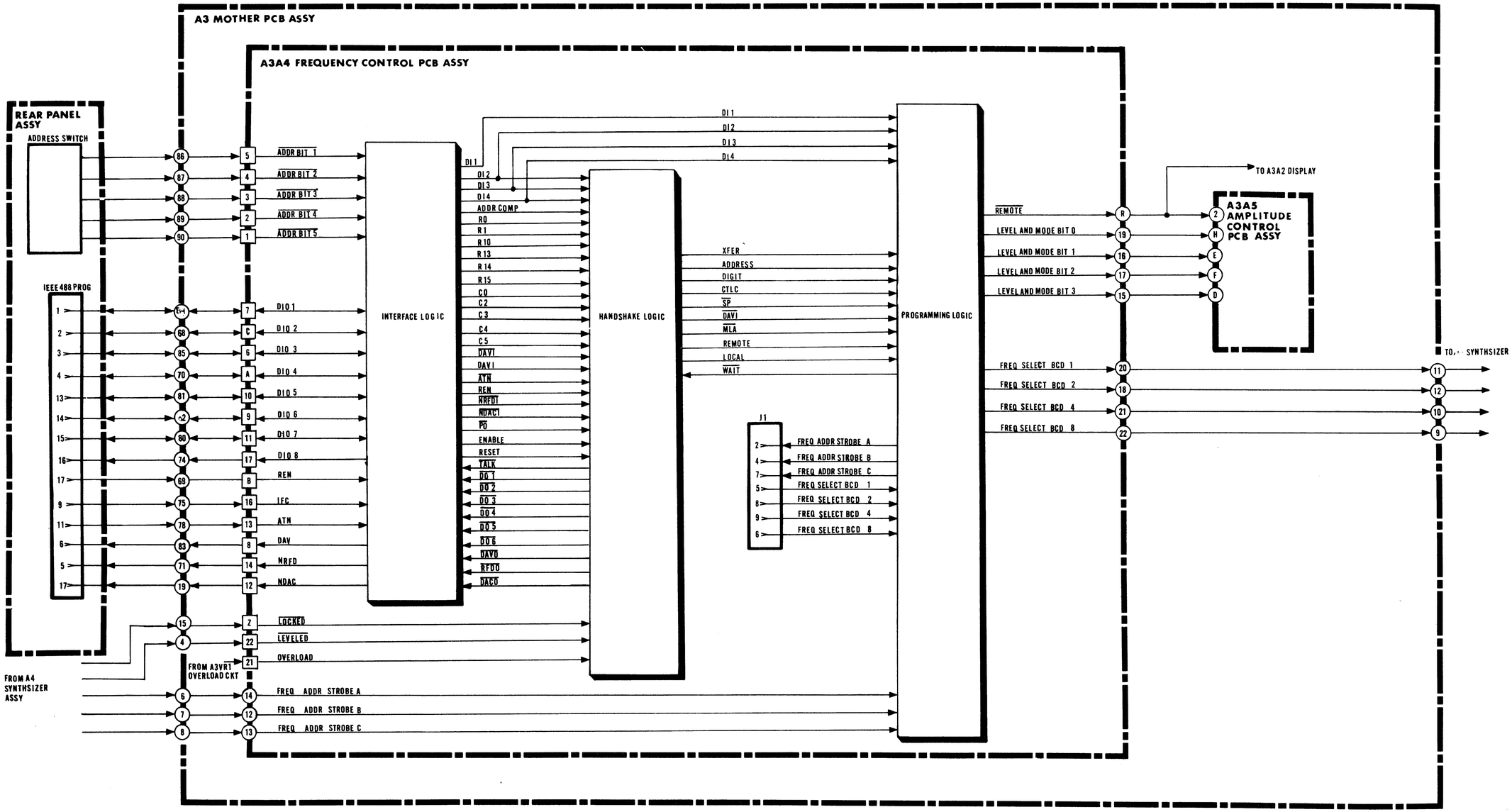

Figure 4-14
Frequency Control
Functional & Interface Block Diagram

The GPIB permits operation of the Signal Generator from a data bus which conforms to IEEE STD-488 1978. The functions provided by the interface when Option 06 is installed are Frequency Selection and Status Reporting. Option 07 may be selected in addition to Option 06, and provides Output Level and Modulation Mode functions.

The Model 1702 may be used On Line/Off Line (Remote/Local). When in the Remote Mode and connected to the interface bus system, it may be programmed as to frequency selection, output level setting and modulation mode selection by sending device dependent commands during the Signal Generator's "Listen" mode of operation. Device dependent commands are received at any time during its operation. The 1702 will ignore any device dependent or independent command for which it has not been designed or programmed to respond to. When all commands have been received and the Signal Generator is addressed to "Talk", data is then transmitted on its LOCKED, LEVELED and OVERLOAD status in compliance with IEEE-488 "Handshake" process to those devices that are addressed to "Listen".

NOTE

For complete details on the electrical, mechanical and timing requirements, refer to IEEE STD-488 1978.

The bus interface lines are assigned IEEE STD-488 mnemonics which are defined as follows:

DI01 through DI08: Data Input/Output lines 1 through 8 transmitted message bytes in bit parallel, byte-serial format, asynchronously and in a bi-directional manner.

DAV: Data Valid is used indicate the condition (availability and validity) of information on the DIO signal lines.

NRFD: Not Ready For Data is used to indicate the condition or readiness of device(s) to accept data.

NDAC: Not Data Accepted is used to indicate the condition of acceptance of data by device(s).

ATN: Attention is used to specify how data on the DIO signal lines are to be interpreted and which devices must respond to the data.

IFC: Interface Clear is used to place the interface system, portions of which are contained in all interconnected devices, in a known quiescent state.

SRQ:* Service Request is used by a device to indicate the need for attention and to request an interruption of the current sequence of events.

REN: Remote Enable is used (in conjunction with other messages) to select between two alternate sources of device programming data.

EIO:* End or Identify is used to indicate the end of a multiple byte transfer sequence or in conjunction with ATN, to execute a polling sequence.

*These lines are not used by Model 1702 and are inactive.

Table 4-11 provides the pin designations for the Rear Panel IEEE-488 PROG connector.

TABLE 4-11 IEEE PROG CONNECTOR

PIN NUMBER	IEEE STD-488 MNEMONIC	PIN NUMBER	IEEE STD-488 MNEMONIC
1	DIO1	13	DIO5
2	DIO2	14	DIO6
3	DIO3	15	DIO7
4	DIO4	16	DIO8 (Inactive)
5	EIO (Inactive)	17	REN
6	DAV	18	GND (Return)
7	NRFD	19	GND (Return)
8	NDAC	20	GND (Return)
9	IFC	21	GND (Return)
10	SRQ (Inactive)	22	GND (Return)
11	ATN	23	GND (Return)
12	GND (Shield)	24	GND (Logic)

4.5.5.1 Input/Output Interface Logic

The following interface circuit analysis is referenced to Figure 4-15. The DIO1 through DIO7, DAV, ATN, IFC, NRFD and NDAC lines interface with GPIB via three Quad Bus Transceivers (U5, U6 and U7). The REN line which is a receive only function is interfaced by inverter U4-4. The DIO8 line,which is a transmit only function and is always negative true, is returned through jumper W2 to logic ground. The EIO and SRQ lines are inactive and terminate into IEEE STD-488 tri-state resistor dividers to provide a +2.6 V terminated level to the interface bus at all times.

The data is received in a bit-parallel, byte-serial format as a 7-bit ASCII code by the bus tranceivers and applied to the three BCD-to-Decimal Decoders (U16, U17 and U18) as the $\overline{DI1}$ through $\overline{DI7}$ bits. The $\overline{DI}$ bits are decoded to ASCII format by the decoders. Table 4-12 provides a truth table of the DI bits to ASCII Row and Column decoding format.

TABLE 4-12 DI BITS DECODING TRUTH TABLE

IEEE STD-488 DI BITS							DECODER BITS	
7	6	5	4	3	2	1		
X	X	X	1	1	1	0	U16-7	R1
X	X	X	1	1	1	1	U16-4	R0
X	X	X	0	0	0	0	U16-9	R15
X	X	X	0	0	0	1	U16-5	R14
X	X	X	0	0	1	0	U17-2	R13
X	X	X	1	1	0	1	U17-6	R10
0	0	0	X	X	X	X	U18-2	C5
1	1	0	X	X	X	X	U18-15	C4
0	0	1	X	X	X	X	U18-1	C3
1	0	1	X	X	X	X	U18-6	C2
1	1	1	X	X	X	X	U18-4	C0

X = Don't Care 1 = +5 V 0 = 0 V C = ASCII Column R = ASCII Row

The relationship between the IEEE STD-488 DIO 7-bit code and ASCII character is provided by Table 4-13 USACII Format.

NOTE

ASCII characters framed by heavy lines are used for programming data, status reporting and GPIB control of the Model 1702 Signal Generator.

TABLE 4-13 USASCII FORMAT

BIT NUMBERS →								0_{0_0}	0_{0_1}	0_{1_0}	0_{1_1}	1_{0_0}	1_{0_1}	1_{1_0}	1_{1_1}
b_7 ↓	b_6 ↓	b_5 ↓	b_4 ↓	b_3 ↓	b_2 ↓	b_1 ↓	COLUMN → / ROW ↓	0	1	2	3	4	5	6	7
			0	0	0	0	0	NUL	DLE	SP	0	@	P		p
			0	0	0	1	1	SOH	DC1	!	1	A	Q	a	q
			0	0	1	0	2	STX	DC2	"	2	B	R	b	r
			0	0	1	1	3	ETX	DC3	#	3	C	S	c	s
			0	1	0	0	4	EOT	DC4	$	4	D	T	d	t
			0	1	0	1	5	ENZ	NAK	%	5	E	U	e	u
			0	1	1	0	6	ACK	SYN	8	6	F	V	f	v
			0	1	1	1	7	BEL	ETB	´	7	G	W	g	w
			1	0	0	0	8	BS	CAN	(	8	H	X	h	x
			1	0	0	1	9	HT	EM	)	9	I	Y	i	y
			1	0	1	0	10	LF	SUB	*	:	J	Z	j	z
			1	0	1	1	11	VT	ESC	+	;	K	[	k	{
			1	1	0	0	12	FF	FS	,	<	L	\	l	|
			1	1	0	1	13	CR	GS	—	=	M	]	m	}
			1	1	1	0	14	SO	RS	•	>	N	^	n	~
			1	1	1	1	15	SI	US	/	?	O	_	o	DEL

SOH = Start of Heading (IEEE STD-488 GTL)
LF = Line Feed
CR = Carriage Return

SP = Space
? = (IEEE STD-488 UNL)
_ = (IEEE STD-488 UTL)

The Rear Panel 5-digit ADDRESS switches interface with the Address 5-bit Comparator (U1), word B parallel inputs (U1 pins 3 through 7). The switch address is compared with the $\overline{DI1}$ through $\overline{DI5}$ bits which is applied as the word A inputs of U1 (pins 9 through 13). When $\overline{DI1}$ through $\overline{DI5}$ bit sequence is received that matches the address switch settings, an ADD COMP signal is generated at U1 pin 14 which signifies that the assigned address (switch setting) has been received via the GPIB. Thirty-one Talk/Listen addresses may be assigned by the ADDRESS switch settings. Refer to Table 4-11 for the address to ASCII code format.

The $\overline{\text{DAVI}}$ is inverted by U4-8 to a DAVI. The ATN is inverted by U4-10 to an ATN. The DAVI and ATN are gated by AND gate U30-10 to generate the ENABLE command, which will gate enable appropriate functions of the "Handshake" logic. The Power On Detector circuit generates a PO command when the Signal Generator is turned on by sensing the +5 Vcc supply. The $\overline{\text{IFC}}$ and $\overline{\text{PO}}$ are then gated by NAND gate U25-11 to generate the RESET command, which provides for resetting of handshake logic functions to deselect the Signal Generator as a talker or listener.

TABLE 4-14 TALK/LISTEN ADDRESS ASSIGNMENTS vs. ASCII CHARACTER

ADDRESS SWITCH SETTING BITS					ASCII CHARACTER	
5	4	3	2	1	LISTEN	TALK
0	0	0	0	0	SP	@
0	0	0	0	1	!	A
0	0	0	1	0	"	B
0	0	0	1	1	#	C
0	0	1	0	0	$	D
0	0	1	0	1	%	E
0	0	1	1	0	&	F
0	0	1	1	1	'	G
0	1	0	0	0	(	H
0	1	0	0	1	)	I
0	1	0	1	0	*	J
0	1	0	1	1	+	K
0	1	1	0	0	,	L
0	1	1	0	1	-	M
0	1	1	1	0	.	N
0	1	1	1	1	/	O

ADDRESS SWITCH SETTING BITS					ASCII CHARACTER	
5	4	3	2	1	LISTEN	TALK
1	0	0	0	0	0	P
1	0	0	0	1	1	Q
1	0	0	1	0	2	R
1	0	0	1	1	3	S
1	0	1	0	0	4	T
1	0	1	0	1	5	U
1	0	1	1	0	6	V
1	0	1	1	1	7	W
1	1	0	0	0	8	X
1	1	0	0	1	9	Y
1	1	0	1	0	:	Z
1	1	1	1	1	;	[
1	1	1	0	0	<	/
1	1	1	0	1	=	]
1	1	1	1	0	>	
*1	1	1	1	1	?	—

NOTE

A 1-1-1-1-1 address must not be assigned to any device interfacing the bus; these addresses are reserved for the unlisten ASCII (?) and the untalk ASCII (_) commands.

The TALK from the handshake logic is applied to the three Quad Bus Transceivers to allow the "interface" logic to transmit the DOI bits and the DAV, NRFD and NDAC management control signals when the Signal Generator is assigned to its talk mode.

4.5.5.2 Handshake Logic

The following Handshake Logic analysis is referenced to Figure 4-16. The Handshake process is controlled by the three transfer control line signals: ATN, IFC and REN, and the three active interface mangement control signals: DAV, NRFD and NDAC. The Handshake process functions in the following manner:

1. The IFC command is issued by the controller device, and will cause the Signal Generator to reset its handshake, terminate any data transmission, unaddress itself and place its DIO lines in the tri-state mode (+2.6 V).

*Not to be device assigned refer to note.

P/O A3 MOTHER PCB ASSY

P/O REAR PANEL ADDRESS

P/O A3A4 FREQUENCY CONTROL PCB ASSY(INTERFACE LOGIC)

ADDRESS BIT 1
ADDRESS BIT 2
ADDRESS BIT 3
ADDRESS BIT 4
ADDRESS BIT 5

PROG

DIO1
DIO2
DIO3
DIO4
DIO5
DIO6
DAV
ATN
DIO8
IFC
DIO7
NRFD
NDAC
REN
EOI
SRQ

U5
U6
U7
U4
U1
U16
U17
U18
U19
U30
U25
Q1

DO1 DI1 DO2 DI2 DO3 DI3 DO4 DI4
DO5 DI5 DO6 DI6 DAVO DAVI ATN
IFC DI7 NRFD NDACI REN TALK

ADDRESS COMPAIR
DI1
DI2
DI3
DI4
ASCII ROW
R1 R0 R15 R14 R13 R10
ASCII COLUMN
C5 C4 C3 C2 C0
DAVI
DAVI
ENABLE
ATN
ATN
PO
NRFDI
RESET
NDACI
REN
TALK
DO1 DO2 DO3 DO4 DO5 DO6 DO7 DO8 SRQO IFCO DACO

+5V

Figure 4-15
Interface Logic Diagram

2. The REN command is issued by the controller device. If the Signal Generator receives its listen address while the REN line is active, it will enter its Remote mode.

3. When the REN goes inactive or a GTL is issued as an ASCII SOH, the Signal Generator will return to its Local mode of operation.

4. The Signal Generator is addressed to Talk or Listen by the controller device issuing its assigned Talk or listen address while the ATN line is set active.

5. If the Signal Generator was addressed to Talk, and the controller issues a Talk address other than the Signal Generator's assigned Talk address, the Signal Generator will automatically deselect itself as a Talker.

6. If the Signal Generator was addressed to Talk, and the controller issues the Signal Generator's Listen address, the Signal Generator will automatically deselect itself as a Talker.

7. If the Signal Generator was addressed to Talk, and the controller issues an UNT (ASCII _) command, the Signal Generator will automatically deselect itself as a Talker.

8. If the Signal Generator was addressed to Listen, and the controller issues its Talk address, the Signal Generator will automatically deselect itself as a Listener, and reassign itself as a Talker.

9. If the Signal Generator was addressed to Listen, and the UNL (ASCII ?) command is issued by the controller, the Signal Generator will deselect itself as a Listener.

The following handshake circuit analysis is referenced to Figure 4-16.

When the Signal Generator is turned on, the PO pulse from the power on detector circuit located within the interface logic will reset the Local/Remote Flip-Flop and place the Signal Generator into its Local mode by setting a logic high at U22 pin 1 and a logic low at U29 pin 3.

The Signal Generator's handshake logic is initialized and placed into its Remote mode by the following sequence:

1. The ENABLE is generated by the interface logic when the DAVI and ATN lines go active and is applied to NAND gate U24-3.

2. When the controller device issues the assigned listen address, an ADDR COMP and a C2 or C3 is generated by the interface logic, which is gated with the ENABLE, to produce the $\overline{\text{MLA}}$ at the output of NAND gate U24-6.

3. The $\overline{\text{MLA}}$ is then applied to the R-S Flip-Flop at U27 pin 8, which generates an MLA as a logic high on U27 pin 10.

4. The MLA is then gated with the REN by NAND gate U29-4, which will trigger the one-shot U23-5.

5. The one-shot, when triggered, generates a $\overline{\text{GTR}}$ pulse at its $\overline{\text{Q}}$ output (U23 pin 7). The $\overline{\text{GTR}}$ pulse is applied to U29 pin 1 which sets the Remote/Local R-S Flip-Flops; thus, generating the REMOTE command as a logic high at U29 pin 3.

The Signal Generator is placed into its Local mode on a GTL (ASCII SOH) entry by the following sequence:

1. The ENABLE is generated by the interface logic when the DAVI and ATN lines go high, and is applied to pins 10 and 11 of NAND gate U22.

2. CØ and R1 are generated to logic highs by the interface logic when the controller device issues an ASCII SOH as the GTL command, and are applied to pins 12 and 9 of NAND gate U22; thus, generating a $\overline{GTL}$ as a logic low on pin 13.

3. The $\overline{GTL}$ is then applied to U22 pin 3 to reset the Remote/Local R-S Flip-Flop to its local state (logic high on U22 pin 1); thus, generating a LOCAL command.

The handshakes' unlisten (UNL) and untalk (UNT) gating logic provides the ability for the Signal Generator to deselect itself as a listener or a talker upon the issuance of an ASCII ? (UNL) or ASCII (UNT) command by the controller device.

When an ASCII ? command is received by the interface logic, R15 and $\overline{C3}$ is generated and applied to pins 13 and 11 of U24, which will generate the $\overline{UNL}$ at its output (U24 pin 10), if the ENABLE is also present on U24 pin 11. The $\overline{UNL}$ at U24 pin 10 is then applied to the MLA R-S Flip-Flop at U21 pin 10 to reset the R-S Flip-Flop, which will place a logic low at U27 pin 10 and a logic high at U21 pin 13; thus, deselecting the listen function.

When an ASCII _ command is received by the interface logic, R15 and C5 is generated and applied to pins 2 and 1 of AND gate U25, respectively, which will generate the UNT at its output (U25 pin 3). The UNT is then applied to pin 2 of NAND gate U27, via OR gate U26-3, and generates the $\overline{UNT}$ at its output (U27 pin 3) if the ENABLE is also present on its pin 1. The $\overline{UNT}$ at U27 pin 3 is then applied to the MTA R-S Flip-Flop at U21 pin 3 to reset the R-S Flip-Flop placing a logic low at pin 11 of U27; thus, deselecting the talk function.

The Signal Generator is selected as listener by the controller device issuing its assigned listen address while the ATN and DAVI lines are active. The Signal Generator is selected as a listener by the following logic sequence:

1. The ENABLE is generated by the interface logic, when the DAVI and ATN lines go active, and is applied to pin 3 of NAND gate U24.

2. When the assigned address DI1 through DI5 bits are received by the interface logic a COMP is generated and applied to pin 2 U24.

3. If the received DI6 and DI7 bits are a Ø and a 1,respectively, C3 or C2 will be decoded and applied to pin 5 U24 via OR gate U26-10.

4. The ENABLE, COMP and the C3 or C2 is NAND gated indicating that the assigned listen address has been issued by the controller device; thus, generating the $\overline{MLA}$ at U24 pin 6.

5. The $\overline{MLA}$ is then applied to the MLA R-S Flip-Flop at pin 8 U27 to set the R-S Flip-Flop, placing a logic low at pin 13 U21 and a logic high at pin 10 U27; thus, selecting the listen function.

The Signal Generator is selected as a talker by the controller device issuing its assigned talk address while the ATN and DAVI lines are active. The Signal Generator is selected as a talker by the following logic sequence:

1. The ENABLE is generated by the interface logic when the DAVI and ATN lines go active, and is applied to pin 1 of NAND gate U24.

2. When the assigned address DI1 through DI5 bits are received by the interface logic, a COMP is generated and applied to pin 2 U24.

3. If the received DI6 and DI7 bits are Ø and 1 respectively, C4 or C5 will be decoded and applied to pin 8 of NAND gate U24 via OR gate U26-4.

4. The ENABLE, COMP and C4 or C5 is NAND gated indicating that the assigned talk address has been issued by the controller device; thus, generating the $\overline{\text{MTA}}$ at U24 pin 9.

5. The $\overline{\text{MTA}}$ is then applied to the MTA R-S Flip-Flop at pin 12 of U27 to set the R-S Flip-Flop, which will place a logic high at pin 11 of U27; thus, selecting the talk function.

Nine control signals are generated by the handshake logic and applied to the programming logic to allow for the control of the programming sequence. These nine control signals are listed by their mnemonics with their functional definitions as follows:

ADDRESS	Indicates when an address character (Alphabetic ASCII) is entered via the GPIB.
DIGIT	Indicates when a digit character (Numerical ASCII) is entered via the GPIB.
CTLC	CTLC (Control Character) indicates when an ASCII N, O, CR or LF is entered as a control function via the GPIB
XFER	Indicates when an ASCII N followed by an ASCII O is entered via the GPIB, and that the digit characters are to be transferred from the program latch register for data entry to the Synthesizer.
$\overline{\text{SP}}$	Indicates when an ASCII SP is entered via the GPIB as a "NOT" function.
$\overline{\text{MLA}}$	Indicates when the assigned listen address is entered via the GPIB and that the Signal Generator has been selected as a listener by the handshake logic, as a "NOT" function.
REMOTE	Enables the programming logic to enter and program GPIB data, and inhibits the appropriate Front Panel control functions.
LOCAL	Enables the appropriate Front Panel control functions, and inhibits the GPIB data entry for the programming functions.
$\overline{\text{DAVI}}$	Indicates the availability of programming data on the GPIB, as a "NOT function.

The ADDRESS control signal is generated at NAND gate U31-10 by the following logic operations:

1. The presence of C4 or C5 will place a logic high at OR gate U28 pin 10, which is then applied to U31 pin 12.

2. The absence of R15 ($\overline{\text{R15}}$)will place a logic high at NOR gate U36 pin 11, which is then applied to U31 pin 13.

3. The STORE strobe generated by AND gate U31-6 as a logic high is applied to U31 pin 11 to enable the ADDRESS signal at its output pin 10.

The DIGIT control signal is generated at AND gate U30-11 by the following logic oeprations:

1. The DI2 and DI3 bits are OR'ed by gate U28-4, and then NAND'ed with the DI4 bit by gate U29-10.

2. The U29-10 output is then gated with C3 by NAND gate U32-4, which generates a digit identifier (ASCII 0 through 9) as a logic low.

3. The RØ and C2 is gated by NAND gate U29-11 to generate the $\overline{SP}$.

4. The $\overline{SP}$ is coupled via jumper W4 to U32 pin 1 where it is NAND gated with the U32-4 output by gate U32-3, which is then applied to the pin 13 input of U30.

5. The STORE strobe generated by AND gate U31-6 as a logic high is applied to U30 pin 12 to enable the DIGIT signal at its output U30 pin 11.

Entry of an Control Character consisting of an ASCII 0, N, CR or LF is detected, and the generation of the XFER and CTLC control signals are performed by the following logic operations.

1. The detection of an ASCII N entry is by the presence of a C4, R14 and the STORE strobe on the inputs of NAND gate U33-9, which generates a $\overline{N}$ indicator at its output.

2. The detection of an ASCII 0 entry is by the presence of R15 and C4 on the inputs of AND gate U30-4 which generates a 0 indicator at its input.

3. The detection of an ASCII CR or LF is by OR gate U28-3 and AND gate U30-3. When CØ is AND'ed with R1Ø or R13, a CR/LF indicator is generated at U30 pin 3.

4. The 0 indicator at U30 pin 4 is OR'ed with the CR/LF indicator from U30 pin 3 by OR gate U28-11.

5. The output of OR gate U28-11 is applied to NAND gate U32 at its input pin pin 13, where it is enabled by the STORE strobe from U31-6 to generate the $\overline{0}$ or $\overline{CR/LF}$ indicator at its output U32-11.

6. The XFER control signal is generated by the R-S Flip-Flop configured by the cross coupled NAND gates U33-6 and U32-10. The R-S Flip-Flop is set by the $\overline{N}$ from NAND gate U33-9 that is applied to U32 input pin 8. Then it is set when the $\overline{0}$ or $\overline{CR/LF}$ indicator from NAND gate U32-11 is applied to its input at U33-4, if the MLA is also present on U33-3. When it its set state the R-S Flip-Flop generates the XFER at its U33-6 output as a logic high.

7. The CTLC signal is generated by NAND gate U33-10 to indicate an ASCII Control Character entry on the GPIB. When $\overline{0}$ or $\overline{CR/LF}$ indicator from U32-11 or $\overline{N}$ indicator from U33-9 is applied with the MLA from U27-10, its output U33-10 will go to a logic high; thus, generating the CTLC.

The handshake logic will generate a status report on the Signal Generators $\overline{LOCKED}$, $\overline{LEVELED}$, and OVERLOAD flags as a 3-byte serial, 6-bit parallel message unit, when it is placed into its Talk mode. The following steps detail the logic sequence for the generation of the status report message.

1. When the Programming Logic sets its $\overline{WAIT}$ flag to a logic high indicating that the programming sequence has been completed, D Type Flip-Flop U11 is triggered on its up clock at U11-11, which will place its $\overline{Q}$ output U11-12 low.

2. The down clock at U11-12 is coupled via C5 to the trigger input of a 555 Timer (U10-2). The Timer U10 is configured as a One-Shot M.V. having a duration of ≈100 ms. Its Q output (U10-3) will down clock ≈100 ms after trigger time, which is then inverted to an up clock by inverter U15-10 and applied to the clock input of the next D Flip-Flop at U11-3.

3. The $\overline{Q}$ output of the D Flip-Flop at U11-2 is applied to pin 1 of U8-3 and enabled by the $\overline{TALK}$ as a logic low being applied to U8-2. The output at gate U8-3 is then gated with the NDACI signal from the Interface Logic by gate U26-11.

4. The output of gate U26-11 is applied to the B Clock input of One-Shot M.V. U23-11, which will trigger on a down clock and generate an up clock ≈10 μs later at its Q output (U23-9). This up clock then triggers D Flip-Flop U12 with its clock input at pin 3, which sets its Q output high at U12-1.

5. With input pin 9 (U9) high and pin 8 high, the (NRFDI) U9-10 is set to clock U12-11.

6. The Q output of D Flip-Flop (U12-13) is looped back to the A Clock input of U23-12, which will trigger on an up clock. The Q output at U12-13 is also inverted by gate U3-11 to generate the DAVO which is applied to the Interface Logic for transmission by the GPIB. The $\overline{Q}$ output (U12-12) is applied to the clock input of counter U2-14.

7. U2 is a Johnson decade counter having internal output code converter logic. Its Q outputs are normally low, and go high only at their appropriate decimal time period. The Q's output changes occur on a clock strobe at pin 14. Before the first clock Q_0 pin 3 is high, on the first clock Q_1 goes high and on the second clock Q_2 goes high. On the third clock Q_3 goes high and resets the counter through gates U3-4 and U3-3; the counter reset (U2-15).

8. The Q_0, Q_1 and Q_2 outputs of the counter are applied to gating logic which generates a 3-byte serial, 6-bit parallel message unit. The first byte provides the status of the $\overline{\text{LOCKED}}$, $\overline{\text{LEVELED}}$ and $\overline{\text{OVERLOAD}}$ flags. The second byte is an ASCII CR (Carriage Return) and the third byte is an ASCII LF (Line Feed). Table 4-15 provides a format of the status message unit.

TABLE 4-15 STATUS REPORT MESSAGE UNIT FORMAT

		DATA BITS					
MESSAGE	BYTE	D01	D02	D03	D04	D05	D06
STATUS	1	X	X	X	1	0	0
ASCII CR	2	1	0	1	1	0	0
ASCII LF	3	1	1	0	1	0	0

Byte 1 (D01, D02 and D03) is interpreted as an octal number and relates to the following status format:

D01 BIT 1 $\overline{\text{LOCKED}}$

D02 Bit 2 $\overline{\text{LEVELED}}$

D03 Bit 4 $\overline{\text{OVERLOAD}}$

Examples:

000 Octal 0 signifies normal operation

011 Octal 3 signifies an unlocked and unleveled condition.

110 Octal 6 signifies an overload and unleveled condition.

111 Octal 7 signifies an unlocked, unleveled and overload condition.

4.5.5.3 Programming Logic

The following Programming Logic analysis is referenced to Figure 4-17. The programming sequence is controlled by nine control signals that are generated by the Handshake Logic. These nine control signals are listed by their mnemonic or signal name, along with their functional definition and programming operation in the following Table.

TABLE 4-16 PROGRAMMING CONTROL SIGNALS

MNEMONIC OR SIGNAL NAME	FUNCTIONAL DEFINITION	PROGRAMMING OPERATION
ADDRESS	Indicates that an address character (Alphabetic ASCII) has been entered via the GPIB.	Enables the DI1 through DI4 bits for programming by data selector U45, and initiates a programming cycle for the address character by counter U43.
CTL (Control Character)	Indicates that an ASCII N,O, or CR LF has been entered as a control function via the GPIB.	Enables an (ASCII G) which is programmed by jumpers W5, W8,W6 and W7 as a data selection by U45. Will indicate a programming cycle for a control function by counter U43.
DIGIT	Indicates that a digit character (numerical ASCII) has been entered via the GPIB.	Initiates a programming cycle for a digit entry by counter U43, and enables the generation of $\overline{\text{WRITE ENABLE 1}}$ by counter U38 for RAM U54.
XFER	Indicates that an ASCII N followed by an ASCII O has been entered via the GPIB.	Initiates a transfer sequence timed by counter U35, generates the $\overline{\text{WAIT}}$ command sent to the Handshake Logic. Enables the generation of $\overline{\text{WRITE ENABLE 2}}$ for RAM's U53 and U55.
$\overline{\text{SP}}$	Indicates that an ASCII SP (Space) has been entered via the GPIB as a "NOT" function.	Gate enables the DI1 through DI4 bits for entry into RAM U54 by gate U51.
$\overline{\text{MLA}}$	Indicates that the assigned "Listen Address" has been entered via the GPIB when the DAV and ATN were active.	Gated with the $\overline{\text{DAVI}}$ and the zero detection of the Synthesizer ADDR (000) to initiate a U50 transfer sequence.
$\overline{\text{DAVI}}$	Indicates the availability of programming data on the GPIB as a "NOT" function.	Gated with the $\overline{\text{MLA}}$ and the zero detection of the Synthesizer ADDR (000) to initiate a U50 transfer sequence.

TABLE 4-16 PROGRAMMING CONTROL SIGNALS (Cont'd)

MNEMONIC OR SIGNAL NAME	FUNCTIONAL DEFINITION	PROGRAMMING OPERATION
REMOTE	Indicates that the assigned "Listen Address" has been entered via the GPIB when the REN was active.	Allows data selector U52 to select the U53 RAM output as the FREQ BCD to the Synthesizer A4. Also generates the REMOTE output at PCB pin R which will inhibit the Front Panel MODULATION MODE switch, switches and illuminate the REMOTE display annunciator.
LOCAL	Indicates that an ASCII SOH (Start of Heading) has been entered via the GPIB.	Allows data selector U52 to select local frequency BCD as the FREQ BCD to the Synthesizer A4.

The timing of the programming and transfer sequence is determined by the 300 kHz free-running M.V. U39, which clocks two Johnson decade counters U38 and U35. Each of the Johnson counters then control the presettable down counters U43 and U50, respectively, which generates the addressing formats for the RAM's U53, U55 and U54.

The 16 x 4 bit RAM U54 stores the DI1 through DI4 bits as they are received via the GPIB. If the XFER signal is true and an address of 0 is present, the data will be transferred from RAM U54 to RAM's U53 and U55. The data is then read out of RAM's U53 and U55 under the control of the ADDR A, B and C lines.

NOTE

The data at the $\overline{Q}$ outputs of RAM U54 is inverted from that of the DI inputs from the GPIB. The data is then inverted back to the original logic state when read out of RAM's U53 and U55.

The DI1 through DI4 bits are stored into RAM U54 by the following sequence. The DI1 thorugh DI4 bits are gate enabled by U51 when the $\overline{SP}$ signal is true. The programmable down counter U43 controls U54 address lines to ensure that each data bit is loaded into the correct RAM location. The down counter U43's program inputs are generated by the 4-bit data selectors U44 and U45. When an address character (alphabetic ASCII) is entered on the GPIB, the ADDRESS line will go high and set pins 9 high and pins 14 low on the data selectors U44 and U45; thus, allowing address data to be programmed into the down counter U43. When a control character is entered on the GPIB, the CTLC line will go high and set U44-9 and U45-14 high and U44-14 and U45-9 low; thus, allowing an ASCII G which is programmed by jumpers W5, W8, W6 and W7 to be entered on the program inputs of the down counter U43. When an ASCII G is programmed into the down counter, repetitive changes of a single parameter may be entered by inputting the data followed by one or more ASCII CR or LF control characters via the GPIB. When neither a control nor address

character is being received via the GPIB, the "hard wired" 13 on the Y inputs of data selector U44 is applied to the down counter's program inputs which is the "wrap around" (count down from zero) count.

U39 is a free running multivibrator which generates ≈300 kHz clock which is applied to the two Johnson counters U35 and U38. Johnson counter U38's decoded 1, 4 and 7 phase output counts are used to control RAM U54's write cycle. U38's phase 9 output is looped back to its $\overline{E}$ input (pin 13) inhibit the counting when phase 9 count is reached. Each time a valid digit, address or control character is received, one-shot multivibrator U34 will generate a 40 µs positive pulse at its Q output (pin 6); thus, resetting Johnson counter U38 and initiating a RAM U54 write cycle. The RAM U54 write cycle is timed by the 1, 4, 7 and 9 phase output counts of U38.

When phase 1 count is generated at U38 pin 2, a $\overline{\text{WRITE ENABLE 1}}$ pulse is gate enabled by NAND gate U40-3 if a digit character is being received and applied to the $\overline{WE}$ input of RAM U54 at its pin 3.

When phase 1 count is generated at U38 pin 10, the following sequence will take place:

1. If a digit character is being received and the address down counter U43 is not at its zero count (U43 pin 7 low which will reset flip-flop U37), U43 will count down one count via AND gate U42-9, so that the next digit will be entered into its correct address location.

2. If the address counter U43 is at its zero count, it then will be programmed and enabled via gate U42-10, as indicated below:

Received Character	U43 Program Value
Address	Address value (DI1 through DI4)
Control	ASCII G (determined by jumpers W5 through W7 configuration)
Digit	Hard wired 13 (determined by the hard wired Y inputs of data selector U44).

When phase 7 count is generated at U38 pin 6 and the address counter is not at its zero count (U37 pin 10 low), flip-flop U37B (zero count flip-flop) will be clocked at its pin 11; thus, setting U43 at zero count.

When phase 9 count is generated at U38 pin 11, an $\overline{\text{ENABLE}}$ is applied to its pin 13 to inhibit further counting; thus, ending the U54 memory cycle.

Johnson counter U35 decoded 3, 5, 7 and 9 phase output counts are used to control the memory transfer cycle which synchronizes RAM U54's data transfer to RAMs U53 and U55. It also determines the proper start time of the transfer cycle and inhibits the GPIB and synthesizer address logic as required to ensure that no data is lost during the transfer operation. Flip-flop U37A is set during the transfer cycle period and is reset at all other times. U37A's outputs control the data selector U49 to allow selection of RAM U54's address input source and the data selector U48 to allow selection of RAMs U33's and U55's address. When the interface is not monitoring the GPIB (DAVI set high or MLA set high) and an unused zero synthesizer address occurs, U37A will be leading edge triggered by gate U46-10.

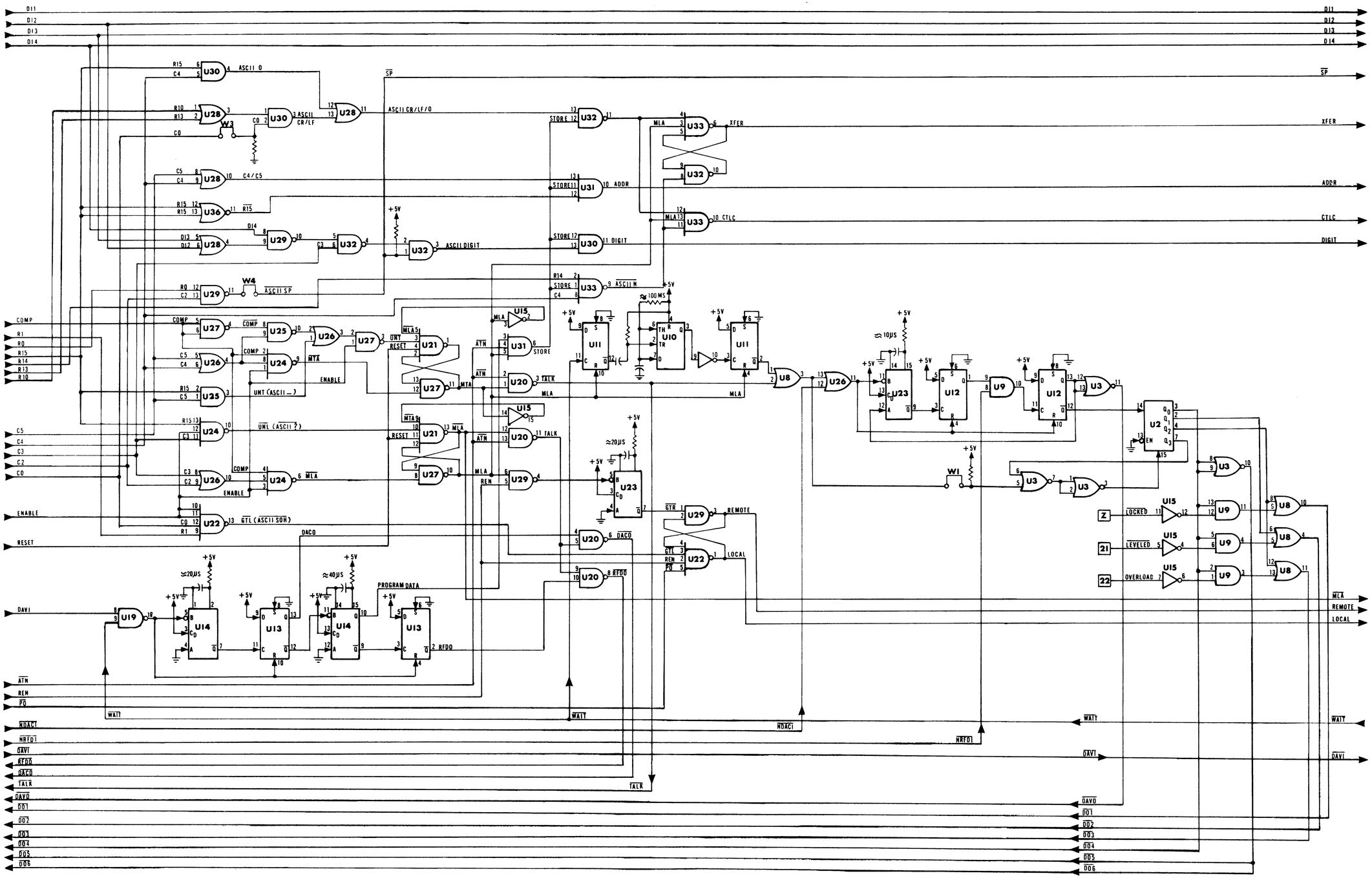

Figure 4-16 A3A4
Handshake Logic Diagram

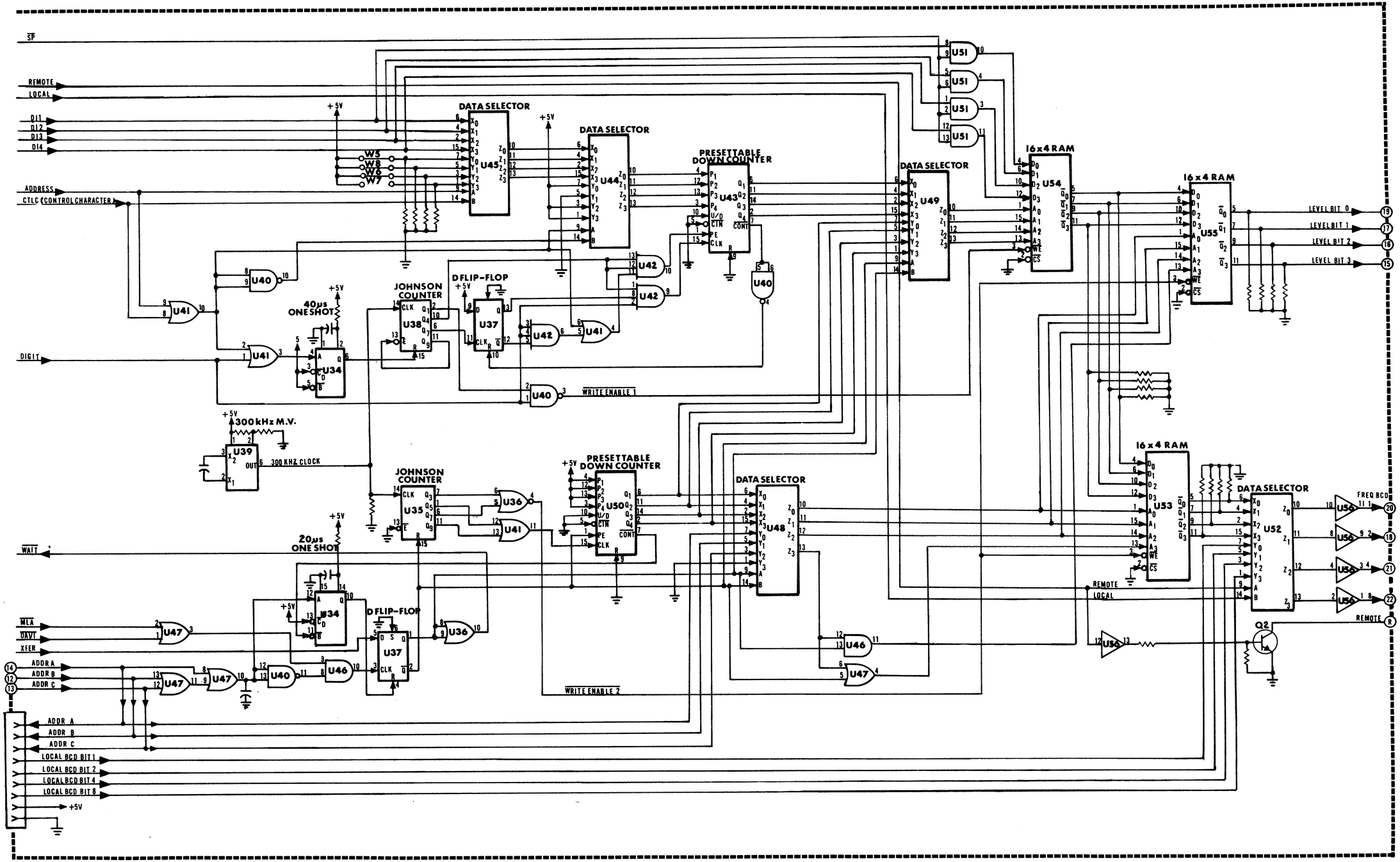

Figure 4-17 A3A4
Programming Logic Diagram

If the interface has enabled XFER, placing U37A pin 5 high, the flip-flop will set; thus, initiating the transfer cycle. The transfer flip-flop's Q output (U37A pin 1) provides a $\overline{\text{WAIT}}$ signal via OR gate U36-10 which will inhibit the GPIB. During the transfer cycle, RAM U54's address from data selectors U49 and U53 along with U54's address from data selector U48 are generated by down counter U50. The presettable down counter U50 is preset to 15 by its hard wired inputs, and its preset enable (pin 1) is connected to the $\overline{Q}$ output of the transfer flip-flop (U37A pin 2). Johnson counter U35's decoded 3, 5, 7 and 9 phase outputs are used to control the memory transfer cycle. Free running multivibrator U39 provides a 300 kHz clock for Johnson counter U35. U35 is held in its reset state by U37A until the start of the memory transfer cycle. One complete U35 counter cycle produces two memory transfer cycles. Phases 3, 7, 5, and 9 are OR'ed by U36-4 and U41-11, respectively. The memory transfer cycle as it relates to the Johnson counter phase outputs is defined as follows:

Phases 3 and 7: A $\overline{\text{WRITE ENABLE 2}}$ pulse is generated at NOR gate U36-4 and applied to the $\overline{\text{WE}}$ pins of RAMs U53 and U55.

Phases 5 and 9: Decrements the address counter U50 one-count.

When a CONT is generated at U50 pin 7, the 20 µs one-shot U34 is triggered at its $\overline{B}$ input (pin 11) to prevent any data at address zero to be transferred. Although all data is transferred to both U53 and U55 RAMs from U54, only frequency selection data is read out of U53, because U47-4 presents a logic high when not in a transfer cycle. The mode and level data is applied to the Amplitude Control Assembly A3A5 directly from the outputs of U55. Data selector U52 selects the frequency data from U53 when remote mode is enabled.

4.5.6 Source 2 Assembly A4A5 (Option 06/07)

When either Option 06 or 07 is configured, the standard Source 2 PCB Assembly part number 05362401 is replaced by Source 2 PCB assembly part number 05700501, which provides for the increased response time of the Synthesizer phase-lock required for frequency selection when the GPIB is implemented.

The Source 2 Assembly generates a 1.0000 to 1.9999 MHz output having 100 Hz discrete steps. Figure 4-18 provides a block diagram of the Source 2 Option 06/07 functional operation.

The heart of the Source 2 is a 100 to 200 MHz VCO which consists of FET Q1 and its associated circuit components. Varicaps CR1 and CR2 are the voltage/frequency controlling devices, which are tuned by the voltage level that is generated by the phase detector U5, integration amplifier U15, and amplified and buffered by U16. This VCO control voltage can be monitored at test point TP1. The VCO generates a 100.000 to 199.999 MHz signal having 10 kHz discrete steps which can be monitored at test point TP2. The VCO outputs to the ECL ÷10 counter U2 and the ÷N counter circuits.

The ÷N counter circuits utilizes the two modulus prescaler technique. The VCO 100 to 199 MHz signal is prescaled (divided) by ECL dual modulus counter U3 (the basic mode of operation of the prescaler being ÷10). The dual modulus prescaler starts in its ÷11 mode. IC U4 is a counter control logic chip, which controls the modulus of the prescaler counter U3, and provides effective "frequency extension" of the four decade programmable ÷N counter chain comprising of U7, U8, U9 and U10. Counter U6 functions as a modulus control counter, its Q outputs (pins 7, 9 and 15) are applied to the programming inputs P_0, P_1 and P_2 of the counter control logic chip U4. The parallel enables (PE's) pin 3 of the ÷N counter chain is connected to the OUT of the control logic IC (U4 pin 9), which allows for the re-programming of the ÷N counter chain for the next count cycle.

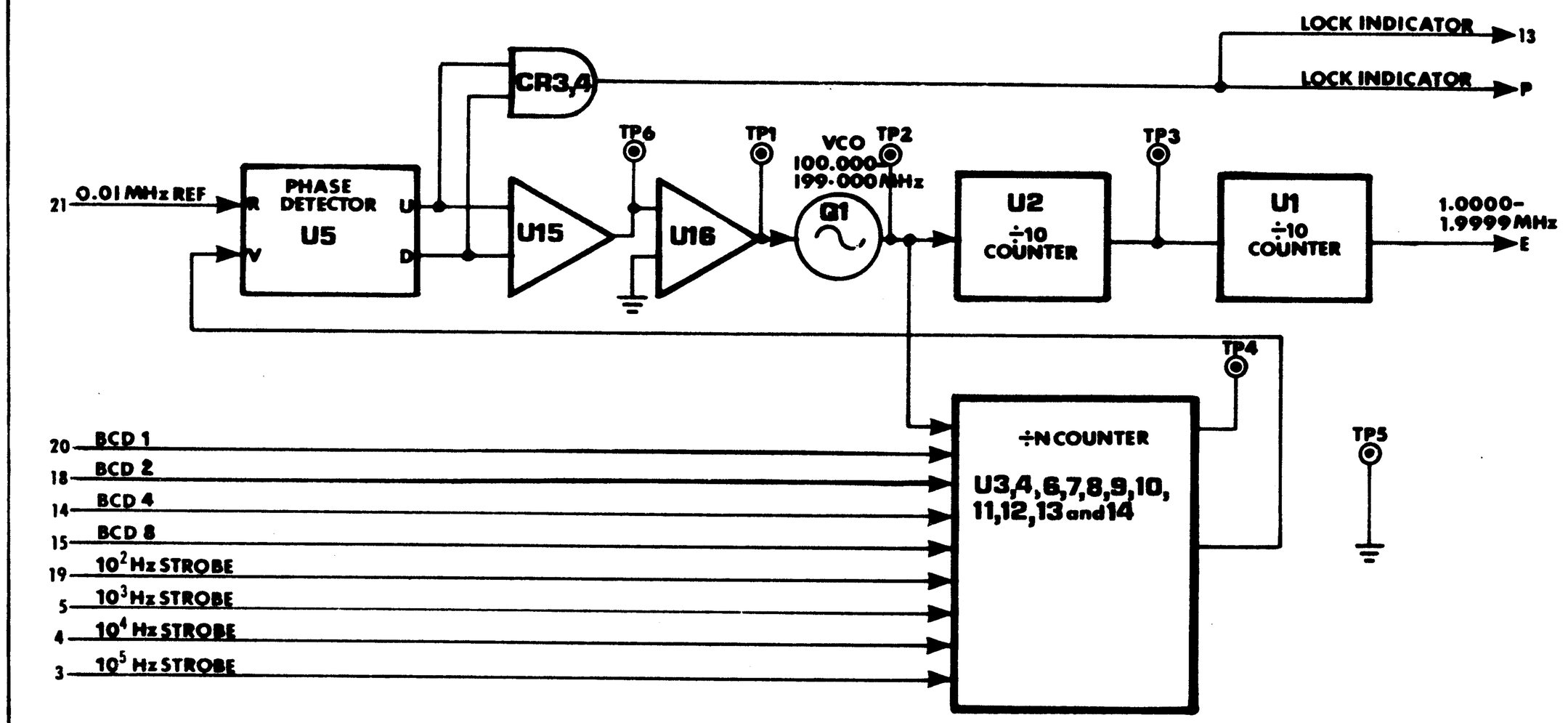

FIGURE 4-18 A4A5 SOURCE 2 OPTION 06/07 FUNCTIONAL BLOCK DIAGRAM

The dual modulus prescaler U3 divides by either 11 or 10. The M_2 input (U3 pin 3) is set low at the beginning of the count cycle and a ÷11 results. The counter control logic U4 monitors the Q outputs of the modulus control counter U6 and will generate an EN at its pin 7 when U6 reaches its terminal (zero) count. This momentary zero state of U6 is detected to generate an EN high at U4 pin 7 which in turn places U3 pin 3 high thus enabling the prescaler for a ÷10 modulus during its next cycle. Test point TP4 allows for the monitoring of the U3 prescaler output.

The ÷N counter circuits divides the VCO signal by an integer (N) that is programmed by the 1-2-4-8 BCD and the 10^2 through 10^5 decade strobes (these program control data signals are generated by the Time Base Divider Assembly A4A4 and relates to the setting of the frequency switch setting). U12, U11, U13 and U14 are TTL 4-bit bistable latches that allow for the programming of the ÷N count chain U6 through U10.

The ÷N counter chain outputs to the phase detector V input (U5 pin 3), where it is referenced to the 0.01 MHz applied to the R input (U5 pin 1). The phase detector responds only to negative transitions, hence the phase error is independent of duty cycle or amplitude variations. The phase detector outputs, up (U) and down (D) at U5 pins 2 and 13, respectively, are applied to integration amplifier U15, and the resulting average level at U15 pin 6 is the phase difference error signal which is applied to the VCO by amplifier U16 to increase/decrease its frequency. The phase detector outputs will have short duration, low amplitude, negative pulses present on its output levels. The phase detector U and D outputs will remain high when the reference input (R) and the variable input (V) negative transistions coinside, thus indicating a phase lock. When phase lock is achieved the "AND" gate comprised of diodes CR3 and CR4 will output a TTL logic high at A4A5 pins 13 and P, which is the LOCK INDICATOR signal and routed to the Time Base Assembly A4A4.

The VCO output is also applied to ECL counter U2 which counts down (÷10) the 100.00 to 199.99 MHz VCO signal to a 10.000 to 19.999 MHz signal. This 10.000 to 19.999 MHz signal is then counted down (÷10) by TTL counter U1 and outputs a 1.0000 to 1.9999 MHz signal having 100 Hz steps as the SOURCE 2 OUTPUT signal to the A4A5 connector at pin E.

4.5.7 Amplitude Control PCB Assembly A3A5 (Option 07)

When Option 07 is configured the Amplitude Control PCB Assembly A3A5 is installed into the Mother PCB Assembly A3 and the Standard Step Attenuator U1 part number #053994 is replaced by Step Attenuator U1 (Option 07) part number #067880. Also Option 06 must be configured to support the Option 07 as to IEEE-488 GPIB function. Refer to Option 07 Full Remote Installation #0672501 Replaceable Part List located in Chapter 6 for detail parts configuration.

The following circuit analysis is referenced to figure 4-19 which depicts the functional logic contained on the A3A5 PCB Assembly.

The 4-bit binary REMOTE LEVEL and MODE DATA from the A3A4 PCB Assembly is applied to the data inputs of the four addressable serial input latches U20 through U23. These four latches are addressed by the 3-bit FREQUENCY ADDR strobes from the Synthesizer Assembly A4.

The three one-shot multivibrators (U19A, U19B and U18B) and AND gate U12-3 provide for the generation of the $\overline{\text{WRITE}}$ command which is applied to pin 4 of the four latches. When the $\overline{\text{WRITE}}$ line is set low, data is entered into a particular bit location that is addressed by the FREQ ADDR A, B and C format. When the $\overline{\text{WRITE}}$ line goes high, the entry of data is inhibited and the Q output of the four latches will remain at their addressed state, until the next address sequence is initiated and the $\overline{\text{WRITE}}$ line goes low. In effect, the latches provide a 4 to 5 multiplexer function.

The Q_4 outputs of latches U20 through U22 readout the "demultiplexed" mode data as MO, Ml, and M2 which is applied to the A, B and C inputs of decoder U26. When the REMOTE is applied to the D input of U26 (pin 11) as a logic low, the decoder will provide a decoded output of the selected mode as AM, FM or CW or the RESET OVERLOAD status flag. Table 4-17 provides a truth table for decoder U26.

TABLE 4-17 U26 DECODER TRUTH TABLE

INPUT				OUTPUT				
A	B	C	D	Q_0	Q_1	Q_2	Q_3	FUNCTION
0	0	0	0	1	0	0	0	AM MODE SELECT
1	0	0	0	0	1	0	0	CW MODE SELECT
0	1	0	0	0	0	1	0	FM MODE SELECT
0	0	1	0	0	0	0	1	RESET OVERLOAD

The AM, CW and FM mode selection outputs are applied to the Modulation Control Assembly A3A3 via A3A5's output pins [4], [5] and [C], respectively, along with the REMOTE at pin [10]. The Q_4 output of decoder U26 is applied to one-shot multivibrator U18A, which will generate an overload reset pulse ≈20 µs in duration at its Q output (pin 6). Transistors Q8 and Q9 translate the reset pulse from a TTL (+5 V) level to a +15 V analog compatible level, which is then applied via A3A5 pin 7 to the overload circuit located on the Mother PCB Assembly A3.

Latches U20 through U23 readout the "demultiplexed" 0.1 dB level data as the I0, I1, I2 and I3 bits at their Q_1 outputs (pin 10), which are applied to the A_0 through A_3 address inputs of PROM U11. The Q_2 output (pin 11) of the U20 through U23 latches readout the "demultiplexed" 1 dB level data as the J0, J1, J2, and J3 bits which are applied to the A inputs of NBCD adder U16. U16 adds the 4-bit A inputs to the hardwired 0100 B inputs and output a NBCD summation at its S outputs Table 4-18 provides a truth table for the U16 NBCD adder.

The S outputs of NBCD adder U16 are then applied to the B inputs of NBCD adder U17 and the U16 C_{OUT} is applied to the C_{IN} of NBCD adder U14. U17 adds the 4-bit B inputs to the hardwired A 1100 inputs, with the C_{IN} hardwired at logic 0, and outputs a NBCD summation at its S outputs. Table 4-19 provides a truth table for the U17 NBCD adder.

TABLE 4-18 U16 NBCD ADDER TRUTH TABLE

INPUT					OUTPUT				
A_1	A_2	A_3	A_4	C_{IN}	S_1	S_2	S_3	S_4	C_{OUT}
0	0	0	0	1	1	1	0	0	0
1	0	0	0	1	0	0	1	0	0
0	1	0	0	1	1	0	1	0	0
1	1	0	0	1	0	1	1	0	0
0	0	1	0	1	1	1	1	0	0
1	0	1	0	1	0	0	0	1	0
0	1	1	0	1	0	0	0	0	1
0	0	0	1	1	1	0	0	0	1
1	0	0	1	1	0	1	0	0	1

TABLE 4-19 U17 NBCD ADDER TRUTH TABLE

INPUT					OUTPUT				
B_1	B_2	B_3	B_4	C_{IN}	S_1	S_2	S_3	S_4	C_{OUT}
0	0	0	0	0	1	1	0	0	0
1	0	0	0	0	0	0	1	0	0
0	1	0	0	0	1	0	1	0	0
1	1	0	0	0	0	1	1	0	0
0	0	1	0	0	1	1	1	0	0
1	0	1	0	0	0	0	0	1	0
0	1	1	0	0	1	0	0	1	0
1	1	1	0	0	0	0	0	0	1
0	0	0	1	0	1	0	0	0	1
1	0	0	1	0	0	1	0	0	1

The S outputs of the NBCD adder U17 are then applied to the A_4 through A_7 address inputs of PROM U11 and U17's C_{OUT} is applied to the A_2 address input of PROM U15.

The U20 through U23 latches readout the demultiplexed 10 dB level data as the K0, K1, K2 and K3 bits at their Q_2 outputs (pin 12) which are applied to the A inputs of NBCD adder U14. U14 adds the 4-bit A input to the hardwired 0001 B input, its C_{IN} is connected to the U16 NBCD adder C_{OUT} which will go high on a carry. Table 4-20 provides a truth table for the U14 NBCD adder.

TABLE 4-20 U14 NBCD ADDER TRUTH TABLE

INPUT					OUTPUT				
A_1	A_2	A_3	A_4	C_{IN}	S_1	S_2	S_3	S_4	C_{OUT}
0	0	0	0	0	0	0	0	1	0
0	0	0	0	1	1	0	0	1	0
1	0	0	0	0	1	0	0	1	0
1	0	0	0	1	0	0	0	0	1
0	1	0	0	0	0	0	0	0	1
0	1	0	0	1	1	0	0	0	1
1	1	0	0	0	1	0	0	0	1
1	1	0	0	1	0	1	0	0	1
0	0	1	0	0	0	1	0	0	1
0	0	1	0	1	1	1	0	0	1
1	0	1	0	0	1	1	0	0	1
1	0	1	0	1	0	0	1	0	1
0	1	1	0	0	0	0	1	0	1
0	1	1	0	1	1	0	1	0	1
1	1	1	0	0	1	0	1	0	1
1	1	1	0	1	0	1	1	0	1
0	0	0	1	0	0	1	1	0	1
0	0	0	1	1	1	1	1	0	1
1	0	0	1	0	1	1	1	0	1
1	0	0	1	1	0	0	0	1	1

The S outputs of the NBCD adder U14 are applied to the address inputs of PROMS's U15, U24 and U25. U14's C_{OUT} is applied to the gating logic comprised of U12-11 and U13-11 which AND gates the L0 bit to generate the L' = 1 function and OR gates the L0 bit to generate the $\overline{L' = 9}$ function.

The U20 through U23 latches readout the "demuxed" 100 dB level data as the L0, L1, L2 and L3 bits at their Q_4 outputs (pins 13), which are applied to the address inputs A_4, A_5, A_6 and A_7 of PROM U24.

The front panel ATTENUATOR switch S6 interfaces with the A3A5 assembly via the Mother PCB A3 to provide local step attenuator selection. The 6-line -20 to -120 dB local step attenuator input is encoded into a 3-line A, B, and C code by the diode gating array consisting of CR10 through CR16. When the REMOTE command at A3A5 pin B goes low indicating local mode operation the 3-bit local step attenuator data is enabled by pull up resistors U6 and applied to the A_5, A_6 and A_7 address inputs of PROM U25.

The four PROMs utilized by the Amplitude Control PCB Assembly are three each MMI 63135s 256 words by 8 bits TTL compatible memories (U11, U24 and U25) and one each MMI 6301 a 256 words by 4-bits TTL compatible memory (U15). The following four tables provides the program content of the PROMs in hexidecimal format.

TABLE 4-21 PROM U11 PROGRAM CONTENT

	00	01	02	03	04	05	06	07	08	09	0A	0B	0C	0D	0E	0F
00	00	06	0C	11	17	1D	22	27	2D	30	00	00	00	00	00	00
01	37	3D	42	47	4C	51	56	5B	5F	64	00	00	00	00	00	00
02	69	6E	72	77	7B	80	84	88	8D	91	00	00	00	00	00	00
03	95	99	9D	A1	A5	A9	AD	B1	B5	B8	00	00	00	00	00	00
04	BC	CO	C4	C7	CB	CE	D2	D5	D9	DC	00	00	00	00	00	00
05	DF	E2	E6	E9	EC	EF	F2	F5	F8	FB	00	00	00	00	00	00
06	00	06	0C	11	17	1D	22	27	2D	32	00	00	00	00	00	00
07	37	3D	42	47	4C	51	56	5B	5F	64	00	00	00	00	00	00
08	69	6E	72	77	7B	80	84	88	8D	91	00	00	00	00	00	00
09	95	99	9D	A1	A5	A9	AD	B1	B5	B8	00	00	00	00	00	00
0A	00	00	00	00	00	00	00	00	00	00	00	00	00	00	00	00
0B	00	00	00	00	00	00	00	00	00	00	00	00	00	00	00	00
0C	00	00	00	00	00	00	00	00	00	00	00	00	00	00	00	00
0D	00	00	00	00	00	00	00	00	00	00	00	00	00	00	00	00
0E	00	00	00	00	00	00	00	00	00	00	00	00	00	00	00	00
0F	00	00	00	00	00	00	00	00	00	00	00	00	00	00	00	00

TABLE 4-22 PROM U15 PROGRAM CONTENT

	00	01	02	03	04	05	06	07	08	09	0A	0B	0C	0D	0E	0F
00	00	00	00	00	08	08	08	08	00	00	00	00	08	08	08	08
01	00	00	00	00	08	08	08	08	00	00	00	00	08	08	08	08
02	08	08	00	00	0A	0A	00	00	0E	0E	00	00	0E	0E	00	00
03	0C	0C	00	00	0E	0E	08	08	0E	0E	00	00	0E	0E	08	08
04	00	00	00	00	00	00	00	00	00	00	00	00	00	00	00	00
05	00	00	00	00	00	00	00	00	00	00	00	00	00	00	00	00
06	00	00	00	00	00	00	00	00	00	00	00	00	00	00	00	00
07	00	00	00	00	00	00	00	00	00	00	00	00	00	00	00	00
08	08	08	08	08	0A	0A	0A	0A	08	08	08	08	0A	0A	0A	0A
09	0C	0C	0C	0C	0E	0E	0E	0E	0C	0C	0C	0C	0E	0E	0E	0E
0A	08	08	00	00	0A	0A	00	00	0E	0E	00	00	0E	0E	00	00
0B	0C	0C	00	00	0E	0E	08	08	0E	0E	00	00	0E	0E	08	08
0C	00	00	00	00	00	00	00	00	00	00	00	00	00	00	00	00
0D	00	00	00	00	00	00	00	00	00	00	00	00	00	00	00	00
0E	00	00	00	00	00	00	00	00	00	00	00	00	00	00	00	00
0F	00	00	00	00	00	00	00	00	00	00	00	00	00	00	00	00

TABLE 4-23 PROM U24 PROGRAM CONTENT

	00	01	02	03	04	05	06	07	08	09	0A	0B	0C	0D	0E	0F
00	40	40	40	40	50	50	50	50	50	50	2F	2F	2F	2F	2F	2F
01	40	40	40	40	50	50	50	50	50	50	2F	2F	2F	2F	2F	2F
02	00	00	00	00	00	00	00	00	00	00	00	00	00	00	00	00
03	01	01	01	01	01	01	01	01	01	01	01	01	01	01	01	01
04	03	03	03	03	03	03	03	03	03	03	03	03	03	03	03	03
05	09	09	09	09	09	09	09	09	09	09	09	09	09	09	09	09
06	0B	0B	0B	0B	0B	0B	0B	0B	0B	0B	0B	0B	0B	0B	0B	0B
07	0D	0D	0D	0D	0D	0D	0D	0D	0D	0D	0D	0D	0D	0D	0D	0D
08	0F	0F	0F	0F	0F	0F	0F	0F	0F	0F	0F	0F	0F	0F	0F	0F
09	2F	2F	2F	2F	2F	2F	2F	2F	2F	2F	2F	2F	2F	2F	2F	2F
0A	2F	2F	2F	2F	2F	2F	2F	2F	2F	2F	2F	2F	2F	2F	2F	2F
0B	2F	2F	2F	2F	2F	2F	2F	2F	2F	2F	2F	2F	2F	2F	2F	2F
0C	2F	2F	2F	2F	2F	2F	2F	2F	2F	2F	2F	2F	2F	2F	2F	2F
0D	2F	2F	2F	2F	2F	2F	2F	2F	2F	2F	2F	2F	2F	2F	2F	2F
0E	2F	2F	2F	2F	2F	2F	2F	2F	2F	2F	2F	2F	2F	2F	2F	2F
0F	2F	2F	2F	2F	2F	2F	2F	2F	2F	2F	2F	2F	2F	2F	2F	2F

TABLE 4-24 PROM U25 PROGRAM CONTENT

	00	01	02	03	04	05	06	07	08	09	0A	0B	0C	0D	0E	0F
00	00	00	00	00	00	00	00	00	00	00	00	00	00	00	00	00
01	00	00	00	00	00	00	00	00	00	00	00	00	00	00	00	00
02	0D	0D	0D	0D	0D	0D	0D	0D	0D	0D	0D	0D	0D	0D	0D	0D
03	0D	0D	0D	0D	0D	0D	0D	0D	0D	0D	0D	0D	0D	0D	0D	0D
04	09	09	09	09	09	09	09	09	09	09	09	09	09	09	09	09
05	09	09	09	09	09	09	09	09	09	09	09	09	09	09	09	09
06	0B	0B	0B	0B	0B	0B	0B	0B	0B	0B	0B	0B	0B	0B	0B	0B
07	0B	0B	0B	0B	0B	0B	0B	0B	0B	0B	0B	0B	0B	0B	0B	0B
08	01	01	01	01	01	01	01	01	01	01	01	01	01	01	01	01
09	01	01	01	01	01	01	01	01	01	01	01	01	01	01	01	01
0A	0F	0F	0F	0F	0F	0F	0F	0F	0F	0F	0F	0F	0F	0F	0F	0F
0B	0F	0F	0F	0F	0F	0F	0F	0F	0F	0F	0F	0F	0F	0F	0F	0F
0C	03	03	03	03	03	03	03	03	03	03	03	03	03	03	03	03
0D	03	03	03	03	03	03	03	03	03	03	03	03	03	03	03	03
0E	00	00	00	00	00	00	00	00	00	00	00	00	00	00	00	00
0F	00	01	03	09	0B	0F	0F	0F	0F	0D	0F	0F	0F	0F	0F	0F

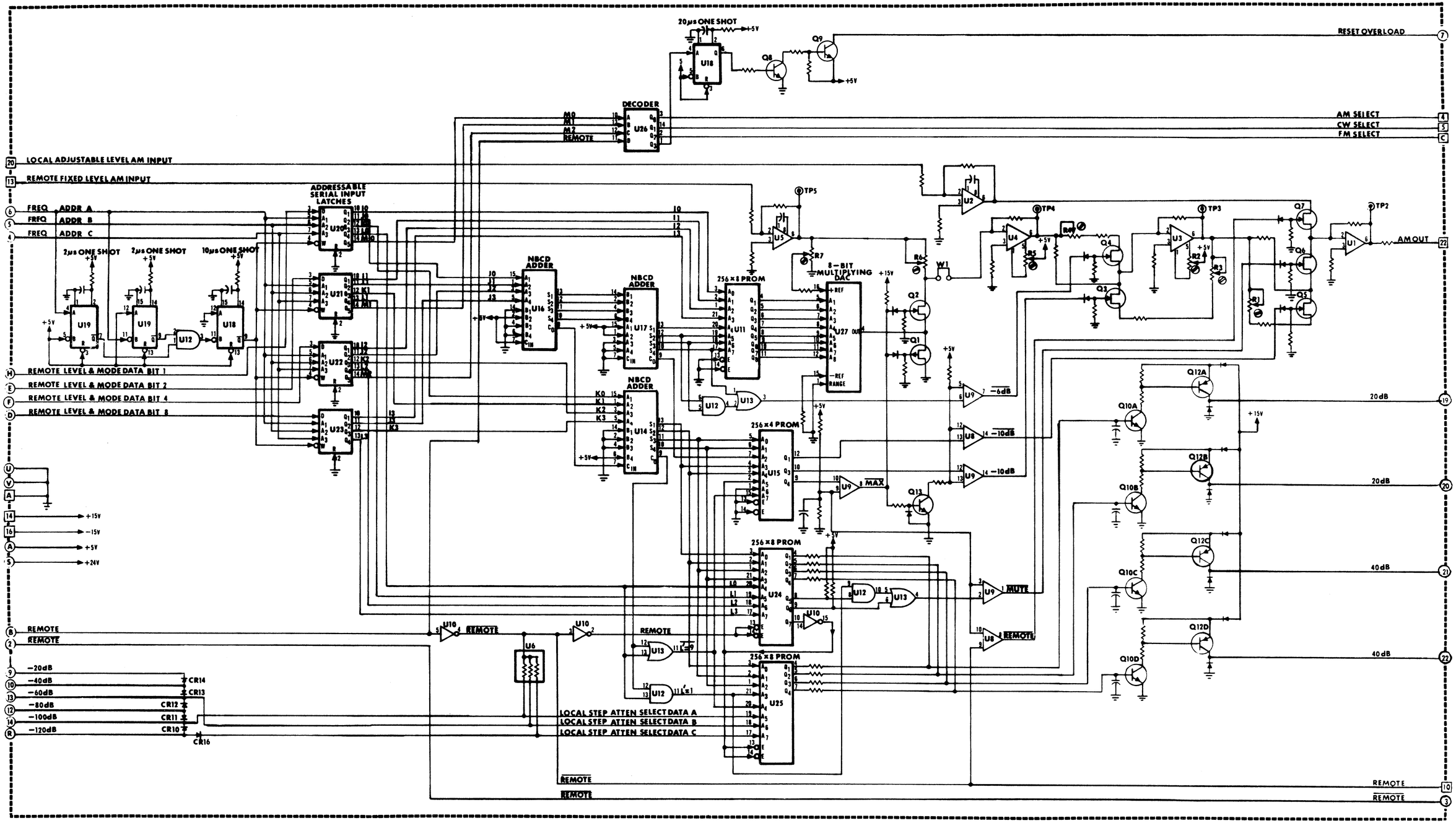

Figure 4-19 A3A5
Amplitude Control PCB Assembly
(Option 07) Functional Logic Diagram

PROM U11 outputs Q_1 through Q_8 consitutes an eight bit digital word that defines the "output veriner level" is .1 dB steps. This eight bit digital word is applied to the A_0 through A_7 input of U27 which is an eight bit multiplying digital-to-analog converter (DAC) The fixed level AM input at A3A5 pin 13 is applied via amplifier U5 and level adjusted by potentiometer R7 to pin 14 of the DAC U27 which is the + reference. The DAC's - reference at U27 pin 15 is referenced to ground (0 volts) via a 1 kΩ resistor. The DAC's output at U27 pin 4 is a linear product of the eight bit digital input word and the fixed level AM input applied to its pin 14.

PROM U15 outputs Q1, Q3 and Q4 are applied to amplifiers U8-14 and U9-8 to generate the -10 dB, the -10 dB and the MAX switch functions, respectively. The -6 dB function is generated by AND/OR gating the NBCD adder U17 S_1, S_3 and S_4 outputs (gates U12-4 and U13-3) which is then applied to amplifier U9-7. Transistor Q13 will turn on when the MAX function is generated and set U8 pin 12, U9 pin 5 and U9 pin 13 to 0 volts thus inhibiting the -6 dB, -10 dB and -10 dB switch functions. The MUTE function at amplifier U9-1 is generated by AND gating the L' = 1 function with the Q_5 output of PROM U24 and the ORing it with the Q_6 PROM U24 output. The REMOTE switch function is provided by amplifier U8-8 and is the inverted REMOTE input applied to A3A5 edge connector, pin (B).

The switch functions are applied to FET switches Q1 through Q7 to allow for the selection of the source (remote or local) and the leveling of the AM OUT signal. When the REMOTE switch function is generated FET switch Q7 is enabled and the LOCAL ADJUSTABLE LEVEL AM INPUT at the PCB edge connector pin (20) is selected via amplified U2 as the AM OUT source. When the MAX switch function is set high FET Q1 is disabled and FET Q2 is enabled the selecting the DAC output at U27 pin 4 as the AM OUT source. When the MAX function goes low FET Q1 is turned on and FET Q2 is turned off and the REMOTE FIXED LEVEL AM INPUT at PCB edge connector pin 13 via amplifier U5 is selected as the AM OUT source. When the MUTE function is set low FET switch Q6 is turned off thus disabling the AM OUT signal which will set the signal generator output to a minimum level (<0.1 μV). When the -10 dB function is set high FET switch Q3 is turned on and resistor R18 and potentiometer R3 are paralled across resistor R19 thus decreasing the gain of amplifier U3. When the -10 dB function is set low FET switch Q5 is turned off and potentiometer R1 and resistor R26 is disconnected from the circuit thus effecting an 10 dB increase of the output level. When the -6 dB function is set low FET switch Q4 is turned off and resistor R17 and potentiometer is disconnected from the circuit thus effecting an 6 dB increase at the output level.

The Q_1, Q_2, Q_3 and Q_4 outputs of PROM's U24 and U25 are dot ORed to generate the step attenuator control signal. PROM U25 is addressed via the front panel ATTENUATOR selector switch thus generating the local step attenuator control signals. PROM U24 is addressed by the GPIB via the L0, L1, L2 and L3 functions thus generating the remote step attenuator signals. Transistors Q10 and Q12 A through D provides the drive to pull the four solenoids of the step attenuator U1.

CHAPTER 5
MAINTENANCE AND CALIBRATION

5.1 INTRODUCTION

This chapter provides information on alignment and calibration procedures, routine maintenance, and troubleshooting techniques.

5.2 CALIBRATION AND TEST EQUIPMENT

Table 5-1 lists the test equipment required for the test and alignment procedures. Alternate equipment with equivalent characteristics may be used when the recommended types are not available.

TABLE 5-1 RECOMMENDED TEST EQUIPMENT

INSTRUMENT TYPE	MODEL	SPECIFICATIONS
Frequency Counter	SD 6053	dc to 3 GHz 7-digits display
Power Meter	SD 4020	1 MHz to 12.4 GHz, -40 to +10 dBm
Service Monitor Main Frame Broadband Mixer Plug-in Deviation Meter Plug-in Audio Synthesizer Plug-in	SD R-1200A SD RTC-6352A SD RTC-4000A SD RTC-6381A	100 Hz to 1 GHz 20 to 990 MHz Ranges: 0-2 kHz; 0-6 kHz, 0-20 kHz 10 Hz to 10 kHz
Spectrum Analyzer	SD 4808	10 kHz to 1.8 GHz
Oscilloscope (with 8A19 and 7B71 plug-in modules)	Tektronix 7704	250 MHz bandwidth main frame with proper sweep and vertical plug-in modules.
Function Generator	SD 405	0 to 11 MHz sinewave. Output 4 V peak-to-peak.
Frequency Standard	HP 105A/B	1 MHz <1 x 10^{-10} short term stability.
Digital Multimeter 3-1/2 digits	SD 7003	ac/dc voltage. Current ±0.1%.
RF Power Amplifier	HP 8447C	30 to 300 MHz +17 dBm output.
Power Supply	SD HH32-1.5	0 to 20 Vdc

5.3 REFERENCE OSCILLATOR CALIBRATION PROCEDURE

The frequency accuracy of the Model 1702 is related to the accuracy of the reference oscillator. The calibration period for the reference oscillator is determined by two factors: 1) the required measurement accuracy, and 2) the reference oscillator's stability and aging rate. Figure 5-1 is a chart that will allow the service technician to determine the required calibration period. To find the required calibration period, lay a straight edge across the chart from the required measurement accuracy to the reference oscillator stability, then read the calibration period off the right hand scale.

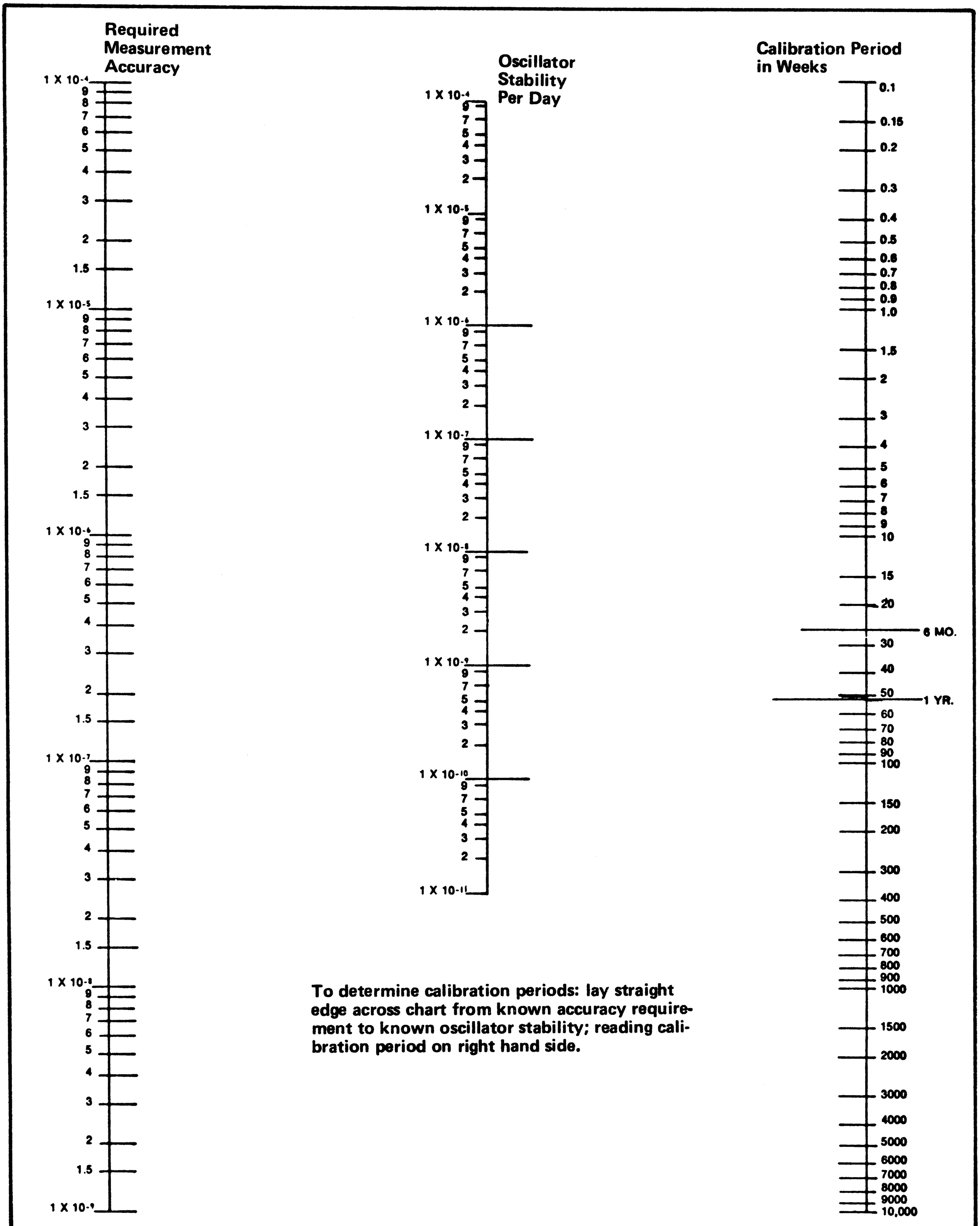

FIGURE 5-1 REFERENCE OSCILLATOR CALIBRATION PERIODS

Three different reference oscillators may be installed in the Signal Generator. These oscillators have different aging rates and temperature stability specifications. Check the type of reference oscillator and determine its specifications.

If the reference oscillator is an oven type, the Signal Generator should be plugged into its power source and allowed to run uninterrupted for at least 72 hours prior to calibration. It is recommended that the Signal Generator be calibrated at an ambient temperature of +20°C (+68°F).

To calibrate the reference oscillator use a 1 MHz Frequency Standard with an accuracy of at least 1 x 10^{-10} short term stability, and an oscilloscope having a sweep rate of 0.01 µs/cm. The following procedures apply:

1. Apply the 1 MHz output of the Frequency Standard to the external trigger connector of the oscilloscope, set the sweep rate to 0.01 µs/cm and select the external trigger mode.

2. Place the Signal Generator's Rear Panel 1 MHz INT/EXT switch in the INT position, and connect the Rear Panel 1 MHz OUT BNC connector to the vertical input of the oscilloscope.

3. Adjust the reference oscillators adjustment(s) for a near stationary waveform on the oscilloscope, then readjust for minimum drift of the waveform.

4. Monitor the oscilloscope noting the rate of drift. The amount of error as referenced to the Frequency Standard can be calculated by the drift rate. A 1 cm/s drift indicates an error of 1 part in 10^{-8} (0.01 PPM).

5.4 INTERNAL ADJUSTMENT LOCATION

All field level adjustments are performed by five adjustment ports on the bottom cover of the Synthesizer Assembly A4; eight potentiometers located on the Modulation Control Assembly A3A3; and one potentiometer located on the Mother Assembly A3. Figure 5-2A and 5-2B depict these adjustments as to location, function and reference designator.

5.5 MODEL 1702 TEST AND ALIGNMENT PROCEDURE

This 29 step Test and Alignment Procedure is followed by a Test and Alignment Data Sheet which supports the procedure in programming the FREQUENCY-MHz Selector Switch recording of measurements and the check off of adjustments and verifications in a step-by-step sequence.

It should be noted that in certain instances the recommended calibration limits are tighter than the unit's guaranteed performance. This is to ensure that the best possible performance is attained after calibration. It is obviously necessary to crosscheck with the guaranteed specifications of Chapter 1 if problems are encountered meeting the tighter calibration specs.

Step 5.5.4 and most other power measurement steps in the procedure that use the spectrum analyzer can better be performed directly on the HP 8902A Measuring Receiver.

For improved accuracy and speed of testing, it is recommended that the HP 8902A Measuring Receiver be used to measure AM depth, at steps 5.5.23 and 24.

NOTE

Allow two hours warm-up before performing this procedure. If the time base reference oscillator is to be calibrated, (Step 2) 72 hours warm-up is required.

1. Connect a Frequency Counter to the Front Panel RF OUT "N" connector with a 50 Ω coax terminator. Set the OUTPUT LEVEL control for a maximum output of 1.0 Vrms (+13 dBm). Set the ATTENUATOR control to its -20 dB position. Depress the MODULATION MODE CW pushbutton switch. Verify that the counter readout is correct for each frequency setting on the FREQUENCY-MHz Selector Switch on the Test Data Sheet.

2. Calibrate the reference oscillator using the procedure in Section 5.3. Rotate the ATTENUATOR control fully counter clockwise to its 0 dB position.

3. Program the FREQUENCY-MHz Selector Switch to 110.0000 MHz. Rotate the OUTPUT LEVEL control fully counter clockwise. Connect a Spectrum Analyzer to the RF OUT "N" connector. Adjust potentiometer A4A14R50 (DET BIAS f≥10 ⌀ R50) via its adjustment port on the bottom cover of the Synthesizer, to a point where the LEVEL LED indicator just extinguishes. The output signal stops decreasing at this point.

4. Program the FREQUENCY-MHz Selector Switch to 010.0000 MHz. Rotate the OUTPUT LEVEL control to its 1.0V position. Place the Spectrum Analyzer in its linear mode, and adjust it to display and measure the level of the 10 MHz signal. Note and record the level on the Test Data Sheet.

5. Program the FREQUENCY-MHz Selector Switch to 009.9000 MHz. Adjust potentiometer A4A14R48 (LEVEL CAL f<10 ⌀ R48) via its adjustment port on the bottom cover of the Synthesizer, to obtain an output level indicated on the Spectrum Analyzer that is exactly the same as was obtained in step 4.

6. Program the FREQUENCY-MHz Selector Switch to 010.0000 MHz. Rotate the OUTPUT LEVEL control to its 0.1V indication. Adjust the Spectrum Analyzer for a linear mode display of the 10 MHz signal. Note and record its level on the Test Data Sheet.

7. Program the FREQUENCY-MHz Selector Switch to 009.9000 MHz. Adjust potentiometer A4A14R49 (DET. BIAS f<10 ⌀ R49) to obtain an output level that is exactly the same as was obtained in step 6. Note that steps 4 to 7 are interactive and may need to be repeated until both limits are achieved.

8. Connect a Power Meter to the RF OUT "N" connector. Set the ATTENUATOR control to its -20 dB position and the OUTPUT LEVEL control to its 1.0V setting. Program the FREQUENCY-MHz Selector Switch to 175.0000 MHz. Adjust potentiometer A3A3R33 (ATTN CAL) located on the Modulation Control PCB Assembly A3A3, for an indication of -7 dBm on the Power Meter.

9. Connect a Spectrum Analyzer via a switchable 20 dB attenuator pad to the RF OUTPUT "N" connector. Adjust the Spectrum Analyzer for a linear display with the 175 MHz signal one division down from the top of the display.

10. Switch out the 20 dB pad. Adjust the OUTPUT LEVEL control to produce the same Spectrum Analyzer display as in step 9. Loosen the set screw on the OUTPUT LEVEL control knob and adjust the position of the knob (without moving its shaft) so that the knob indicates 0.1V on its dial skirt, then tighten the set screw.

11. Repeat steps 8 through 10 to check and calibrate the 1.0V and 0.1V settings of the OUTPUT LEVEL control.

12. Connect a Power Meter to the RF OUT "N" connector. Set the ATTENUATOR to its .1V (-20 dB) position and the OUTPUT LEVEL control to 1V. Note the Power Meter reading for each FREQUENCY-MHz Selector Switch setting from 10.1 MHz to 250.1 MHz in 10 MHz increments. Record the frequencies of the maximum and minimum levels and their respective levels in dBm on the Test Data Sheet.

13. Note the Power Meter reading for each FREQUENCY-MHz Selector Switch setting from 250.1 MHz to 550.1 MHz in 10 MHz increments. Record the frequencies of the maximum and minimum levels and their respective levels in dBm on the Test Data Sheet.

14. Note the Power Meter reading for each FREQUENCY-MHz Selector Switch setting from 550.1 MHz to 999.1 MHz in 10 MHz increments. Record the frequencies of the maximum and minimum levels and their respective levels in dBm on the Test Data Sheet.

15. Rotate the OUTPUT LEVEL control to its 1.0 V (+13 dBm) setting. For the frequencies recorded in steps 12 through 14, measure the output level for each ATTENUATOR step position and enter on the Test Data Sheet.

NOTE

This measurement requires a relatively complex measuring system to achieve required accuracy.

16. Connect a Frequency Counter to the RF OUT "N" connector. Program the FREQUENCY-MHz Selector Switch to 010.0000 MHz. Select the CW MODULATION MODE and the EXT MODULATION SOURCE, and note the reading on the Frequency Counter. Select the FM MODULATION MODE with no input applied to the EXT MOD BNC connector and adjust A4A3R29 (FM ERROR OFFSET) potentiometer for the same reading on the Frequency Counter that was noted when the CW MODULATION MODE was selected. Apply -5.2 V through a 390 Ω resistor to the Front Panel EXT MOD BNC connector. Monitor the error out signal at A4XA17 pin E with a DVM and adjust the Front Panel MODULATION EXT control for a DVM indication of +2.00 Vdc. Adjust potentiometer A4A3R18 (DC GAIN FM REC) for a 20 kHz increase on the Frequency Counter. Recheck the A4A3R29 (FM ERROR OFFSET) adjustment.

17. With an Oscilloscope, monitor Test Point A3A3TP2, and adjust potentiometer A3A3R41 (DET NULL) for a maximum noise indication on the Oscilloscope. Then adjust potentiometer A3A3R55 (DISP NULL) for a 00.00 indication on the Front Panel 3-1/2 digits display.

18. Program the FREQUENCY-MHz Selector Switch to 150.1000 MHz. With EXT MOD SOURCE and FM MODULATION MODE selected, apply 4160 Hz to the EXT MOD input using the SLN-6381A Audio Frequency Synthesizer as the audio frequency source connect the Spectrum Analyzer to the RF OUT "N" connector. Adjust the Analyzer for 2 kHz/cm display. Slowly increase the EXT MOD control from minimum watching for the first carrier null on the Analyzer. Then adjust A3A3R37 (DISPLAY CAL) for a 9.80 kHz indication on the Front Panel display. The specifications include residual FM, which is around 200 Hz.

19. -

20. Recheck the 3-1/2 digits display for the following first null audio frequencies:

1st Null 2080 Hz 04.75 to 5.25 kHz
1st Null 4160 Hz 09.60 to 10.40 kHz

Readjust A3A3R37 and A3A3R41, if necessary, to bring the 3-1/2 digits display into the above tolerances. There should be no need to readjust the potentiometers.

21. With EXT MOD SOURCE and FM MODULATION MODE selected, apply a 1 kHz 4 V peak-to-peak signal from SD-405 Function Generator to the EXT MOD input. Rotate the EXT MOD control fully clockwise. Then adjust potentiometer A3A3R15 (EXT) to a point that will cause the 3-1/2 digits display to flash. Select INT MOD SOURCE, rotate INT MOD control fully clockwise, then adjust potentiometer A3A3R19 (INT) to a point that will cause the 3-1/2 digits display to flash.

22. Select AM MODULATION MODE and EXT MOD SOURCE. Lower the level of the applied 1 kHz signal from the Function Generator to 2 V peak-to-peak, then adjust potentiometer A3A3R52 (AM DISPLAY) for a 50% indication on the 3-1/2 digits display.

23. With the 1 kHz 2 V peak-to-peak signal applied, set the OUTPUT LEVEL control to its .5 V (+7 dBm) position and the step ATTENUATOR switch to its .1 V (-20 dB) position, adjust potentiometer A3A3R30 (AM CAL) for 50% modulation at the RF OUT "N" connector as observed on an Oscilloscope properly terminated at 50 Ω.

24. Select the EXT MODULATION SOURCE. Rotate the EXTERNAL MODULATION control to its mid-range setting. Connect the SLN-6381A Audio Synthesizer to the EXT MOD BNC connector. Verify that the amplitude modulation is produced at 1 Hz to 20 kHz audio modulation frequencies as on the data sheet, noting that AM is only specified up to 10 KHz and performance beyond that is for reference only.

25. Select the CW MODULATION MODE. Set the OUTPUT LEVEL control to its 1.0 V (+13 dBm) position and the step Attenuator to its .1 V (-20 dBm) step. Connect a Spectrum Analyzer to the RF OUT "N" connector. Set up the Spectrum Analyzer for log mode, and for each frequency shown on the Test Data Sheet, verify that all harmonics are ≤-25 dBc.

NOTE

Ensure that the Spectrum Analyzer controls are adjusted to prevent overloading of its input circuits, and causing self generation of harmonics.

26. Verify that nonharmonic spurious responses are within specification for the frequencies shown on the Data Sheet.

27. For each frequency listed on the Test Data Sheet, perform the noise measurements by setting up the Spectrum Analyzer as follows:

Dispersion	20 kHz/DIV
Bandwidth	1 kHz
Video Filter	100 Hz

Adjust the Spectrum Analyzer so that the amplitude of the output signal is displayed at the reference (top) graticule line. Record the amplitude of the Spectrum Analyzer display at a frequency that is offset 50 kHz from the output frequency. Subtract 36 dB from the recorded measurement to provide the 1 Hz BW noise figure.

28. Set the step ATTENUATOR control to its 1 μV (-120 dB) setting and the OUTPUT LEVEL control to its .5 V (+7 dBm) position. Connect an adjustable 0 to 20 Vdc Power Supply to the RF OUT "N" connector. Slowly increase the Power Supply voltage until the OVERLOAD indicator illuminates and the LEVEL indicator extinguishes; thus, indicating that the output protector circuit has tripped. Note and record the trip point voltage on the Test Data Sheet. Reduce the Power Supply voltage to 0 V, depress the OVERLOAD RESET pushbutton switch and verify that the OVERLOAD indicator extinguishes and the LEVEL indicator illuminates. Repeat the above test with the Power Supply polarity reversed. Both the + and - trip points should be between 5 to 17 V in magnitude.

29. Connect a Signal Generator to the input of an RF Power Amplifier. Adjust the Signal Generator to generate a 100 MHz minimum output level signal. Connect the Power Amplifier to the RF OUT "N" connector. Slowly increase the level of the applied 100 MHz signal until the OVERLOAD indicator illuminates and the LEVEL indicator extinguishes, indicating that the output protector circuit has tripped. Without changing the level setting of the applied signal, disconnect the Power Amplifier's output from the RF OUT "N" connector and connect it to an Oscilloscope via a 20 dB 50 Ω attenuator pad. The Oscilloscope indication should be between 0.8 V and 3.5 V peak-to-peak. If not, adjust potentiometer A3R8 (OVERLOAD TRIP POINT) to bring the trip point within 0.8 V and 3.5 V peak-to-peak. Steps 28 to 29 are interactive and may need to be repeated.

MODEL 1702 SIGNAL GENERATOR TEST AND ALIGNMENT DATA SHEET

Serial Number

Date

1.

FREQUENCY SETTING (MHz)	COUNTER READING AGREES (√)
010.0000	
101.1111	
222.2222	
444.4444	
888.8888	

2. Reference Oscillator adjusted per paragraph 5.3 procedure _____ (√)

3. A4A14R50 (DET BIAS≥f 10 ⊘ R50) adjust for minimum output point at 110 MHz. _____ (√)

4. Level at 10 MHz 1.0V _____ (dBm)

5. A4A14R48 (LEVEL CAL<f 10 ⊘ R48) adjusted for level recorded in step 4 at 9.9 MHz. _____ (√)

6. Level at 10 MHz 0.1V. _____ (dBm)

7. A4A14R49 (DET BIAS<f 10 ⊘ R49) adjusted for level recorded in step 6 at 9.9 MHz. _____ (√)

8. A3A3R33 (ATTN CAL) and OUTPUT LEVEL control knob position set to calibrate OUTPUT LEVEL control at 0.1V and 1.0V settings. _____ (√)

11. Repeat steps 8 through 10. _____ (√)

12. Power Meter readings between 10 and 250 MHz.

Maximum output F_1 = _____ MHz

Minimum output F_2 = _____ MHz

Power @F_3 _____ dBm(≤-6)

Power @F_4 _____ dBm(≥-8)

13. Power Meter readings between 250 and 550 MHz

Maximum output F_3 = _____ MHz

Minimum output F_4 = _____ MHz

Power @F_3 _____ dBm(≤-5.5)

Power @F_4 _____ dBm(≥-8.5)

14. Power Meter readings between 550 and 999 MHz

Maximum output F_5 = _____ MHz

Minimum output F_6 = _____ MHz

Power @F_5 _____ dBm(≤-5)

Power @F_6 _____ dBm(≥-9)

15. Output Level at 1.0V (+13 dBm)

10-250 MHz

ATTENUATOR SETTING (dB)	@F_1 = ____ MHz LEVEL (dB)	@F_2 = ____ MHz LEVEL (dB)
-20	_____ (±1)	_____ (±1)
-40	_____ (±2)	_____ (±2)
-60	_____ (±2)	_____ (±2)
-80	_____ (±2)	_____ (±2)
-100	_____ (±2.5)	_____ (±2.5)
-120	_____ (±2.5)	_____ (±2.5)

250-500 MHz

ATTENUATOR SETTING (dB)	@F_3 = ____ MHz LEVEL (dB)	@F_4 = ____ MHz LEVEL (dB)
-20	_____ (±1.5)	_____ (±1.5)
-40	_____ (±2.5)	_____ (±2.5)
-60	_____ (±2.5)	_____ (±2.5)
-80	_____ (±2.5)	_____ (±2.5)
-100	_____ (±3)	_____ (±3)
-120	_____ (±3)	_____ (±3)

550-999 MHz

ATTENUATOR SETTING (dB)	@F_5 = ____ MHz LEVEL (dB)	@F_6 = ____ MHz LEVEL (dB)
-20	_____ (±2)	_____ (±2)
-40	_____ (±3.5)	_____ (±3.5)
-60	_____ (±3.5)	_____ (±3.5)
-80	_____ (±3.5)	_____ (±3.5)
-100	_____ (±4)	_____ (±4)
-120	_____ (±4)	_____ (±4)

16. Frequency CW Mode _____MHz

A4A3R29 (FM ERROR OFFSET) adjusted for same frequency as CW Mode reading. _____(√)

17. A3A3R41 (DET NULL) adjusted for maximum noise at Test Point A3A3TP2. _____(√)

A3A3R55 (DISP NULL) adjusted for a 00.00 3-1/2 digit display indications. _____(√)

18. A3A3R37 (DISPLAY CAL) adjusted for 9.80 kHz on the 3-1/2 digit display at a 4160 Hz carrier null. _____(√)

19. -

20. 3-1/2 digit display indication is within tolerance for first null 2080 Hz and 4160 Hz audio modulation inputs. _____(√)

21. A3A3R15 (EXT) and A3A3R19 (INT) adjusted to allow the 3-1/2 digit display to flash on a 1 kHz 4V peak-to-peak external modulation input. _____(√)

22. A3A3R52 (AM DISPLAY) adjusted for a 50% 3-1/2 digit display indication on a 1 kHz 2V peak-to-peak external modulation input. _____(√)

23. A3A3R30 (AM CAL) adjusted for a 50% modulation output at the RF OUT connector. _____(√)

24. External AM capability

10 Hz _____(√)

100 Hz _____(√)

1 kHz _____(√)

10 kHz _____(√)

20 kHz _____(√)

25. CW 0.1V (-20 dBm)

FREQUENCY SETTING (MHz)	HARMONIC LEVEL (dBc)
27.9	_____(≤-25)
83.2	_____(≤-25)
108.7	_____(≤-25)
156.8	_____(≤-25)
253.6	_____(≤-25)
442.1	_____(≤-25)
607.9	_____(≤-25)
898.2	_____(≤-25)

26. CW 0.1V (-20 dBm)

FREQUENCY SETTING (MHz)	SPURIOUS RESPONSES (dBc)
27.9	_____(≤-40)
83.2	_____(≤-40)
108.7	_____(≤-40)
156.8	_____(≤-50)
253.6	_____(≤-50)
442.1	_____(≤-50)
607.9	_____(≤-50)
898.2	_____(≤-50)

27.

FREQUENCY SETTING (MHz)	NOISE READING (dBc)	-36 dB = 1 Hz BW (dBc)
153.6	_____	_____(≤-103)
458.2	_____	_____(≤-103)
876.3	_____	_____(≤ -97)

28. Output protector circuit dc trip points — Positive _____Vdc(5-17); Negative _____Vdc(5-17)

29. Output Protector circuit RF trip point — _____ Vp-p(.8-3.5)

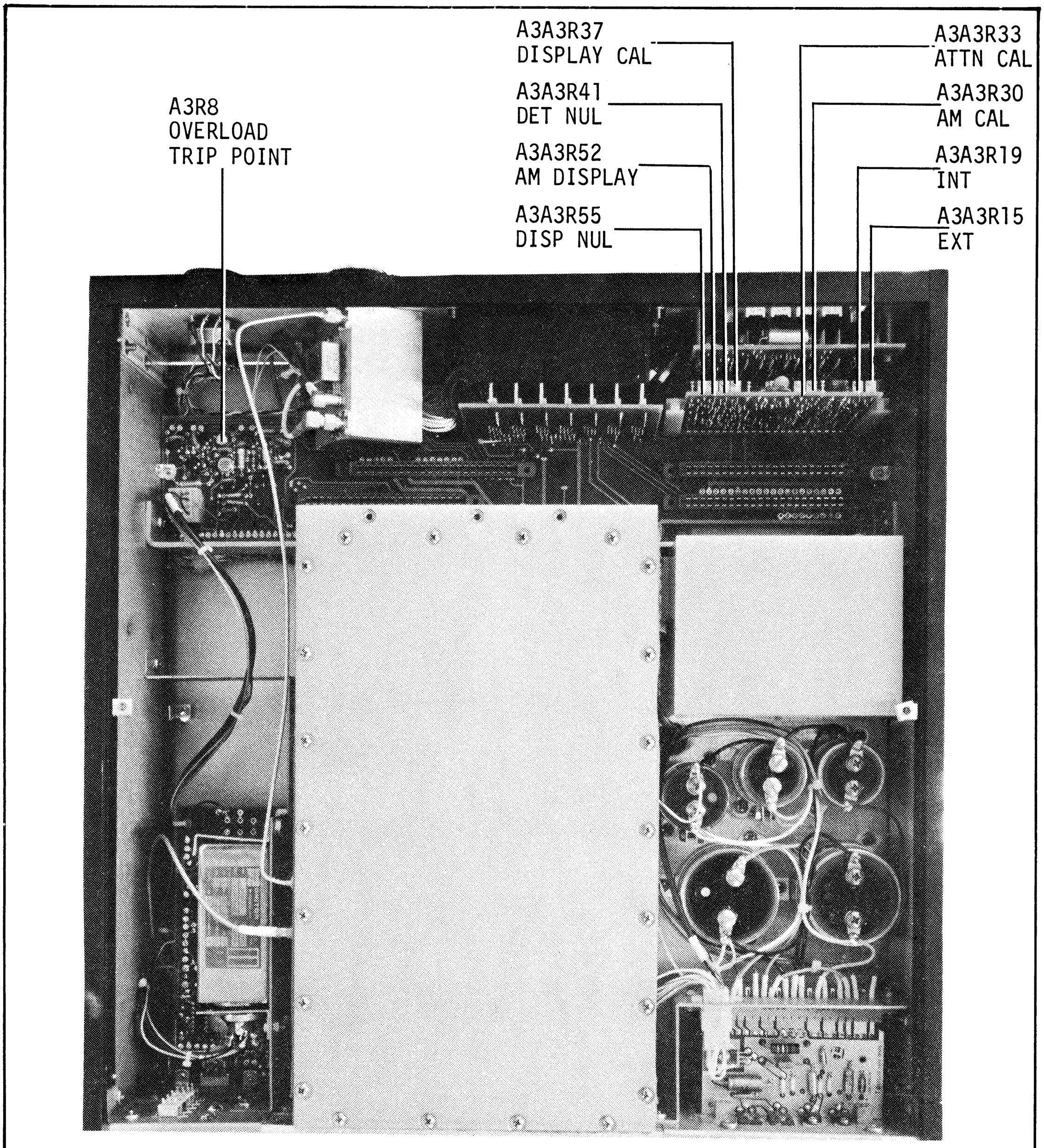

FIGURE 5-2A ADJUSTMENT LOCATION DIAGRAM TOP VIEW

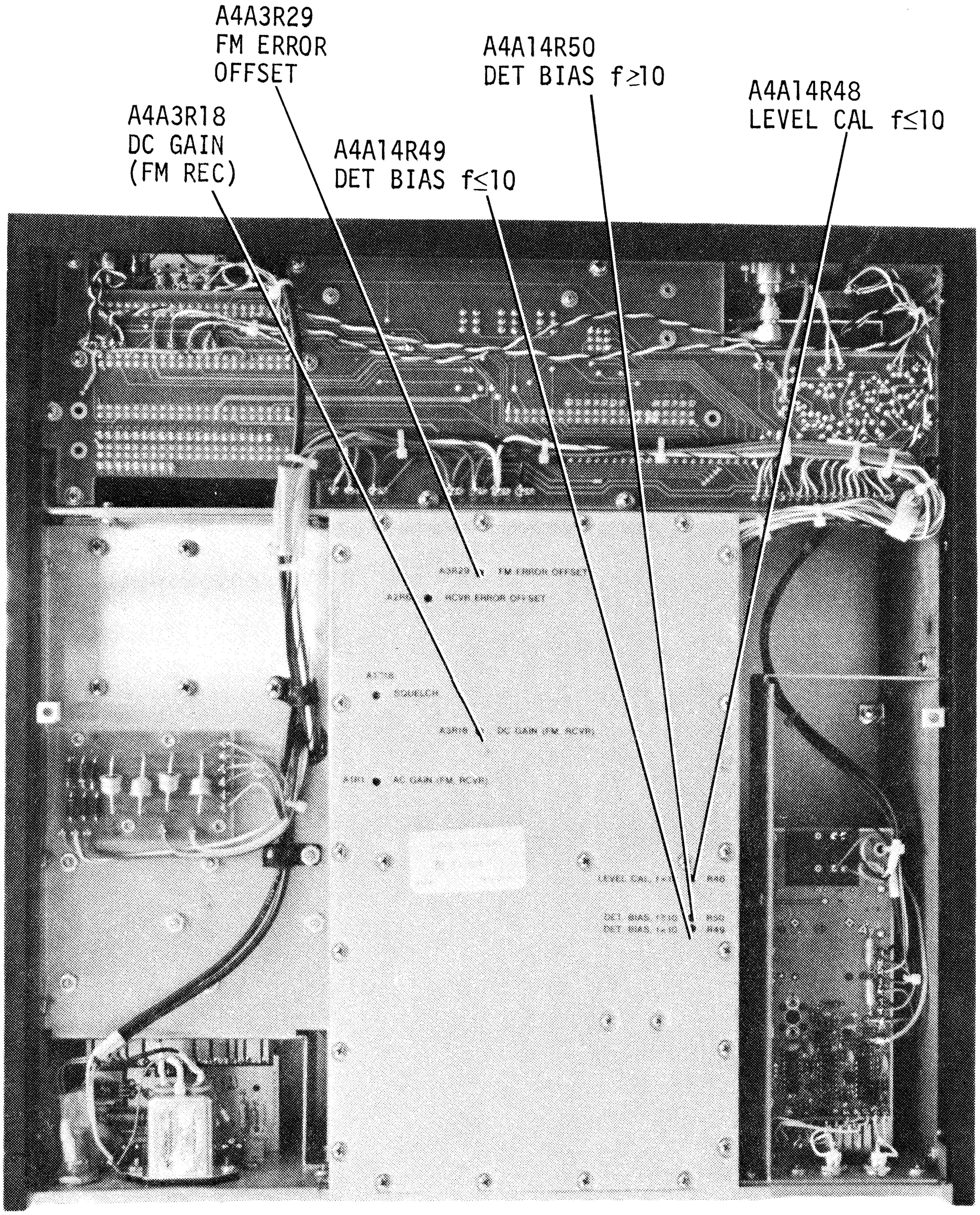

FIGURE 5-2B ADJUSTMENT LOCATION DIAGRAM BOTTOM VIEW

5.6 OPTION 07 AMPLITUDE CONTROL A3A5 TEST AND ALIGNMENT PROCEDURE

The following procedure provides for the alignment, test and verification of the Amplitude Control Assembly A3A5. Figure 5-3 depicts the location of the test points and adjustment potentiometers required to perform the procedure:

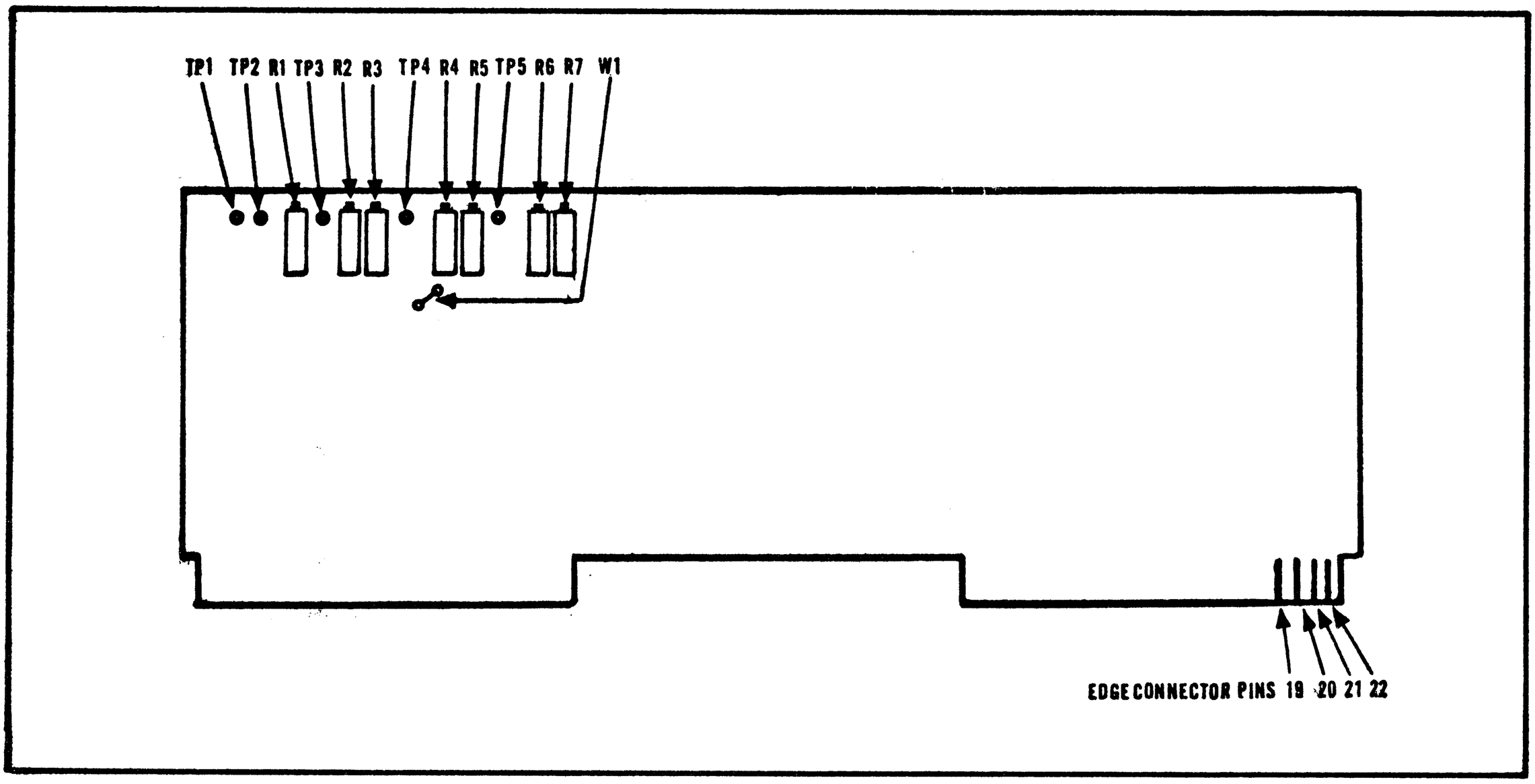

FIGURE 5-3 AMPLITUDE CONTROL TEST POINT AND ADJUSTMENT LOCATION DIAGRAM

NOTE

All voltage measurements are to be made reference to test point A3A5TP1 (analog signal ground).

1. Ensure that the Signal Generator is in its Local mode. Step the Front Panel Attenuator switch from 0 through -120 dB and verify the 4-bit parallel format at the A3A5 edge connector pins as follows:

ATTENUATOR SWITCH STEP (dB)	A3A5 EDGE CONNECTOR PIN (19)	(20)	(21)	(22)
0	0	0	0	0
-20	1	0	0	0
-40	1	1	0	0
-60	1	0	0	1
-80	1	1	0	1
-100	1	0	1	1
-120	1	1	1	1

0 = 0 V
1 = +15 V

2. Place the Signal Generator in to its Remote mode via the GPIB interface. Program the following ASCII data and verify the 4-bit parallel format at the A3A5 edge connector pins:

ASCII GPIB PROGRAM DATA	A3A5 EDGE CONNECTOR PIN (19)	(20)	(21)	(22)
"M1L2ØØØ"	0	0	0	0
"M1L3ØØØ"	1	0	0	0
"M1L4ØØØ"	1	1	0	0
"M1L5ØØØ"	1	0	0	0
"M1L6ØØØ"	1	1	0	1
"M1L7ØØØ"	1	0	1	1
"M1L8ØØØ"	1	1	1	1
"M1L9ØØØ"	1	1	1	1
"M1LØ17Ø"	0	0	0	0
"M1LØ37Ø"	1	0	0	0
"M1LØ57Ø"	1	1	0	0
"M1LØ77Ø"	1	0	0	1
"M1LØ97Ø"	1	1	0	1
"M1L117Ø"	1	0	1	1
"M1L137Ø"	1	1	1	1
"M1L157Ø"	1	1	1	1

0 ≃ 0V
1 ≃ +15V

3. Remove jumper W1 and program ASCII "M1L2ØØØ".

4. Adjust potentiometer R5 for a 0.0000V DVM reading at test point TP4.

5. Adjust potentiometer R2 for a 0.0000V DVM reading at test point TP3.

6. Reinstall jumper W1 that was removed in step 3.

7. Program ASCII "M1L214Ø" and adjust potentiometer R6 for a +3.195V DVM reading at test point TP3.

8. Program ASCII "M1L2199" and adjust potentiometer R7 for a +1.620V DVM reading at test point TP3.

9. Program ASCII "M1L22ØØ" and measure and record the voltage reading at test point TP3.

10. Program ASCII "M1L214Ø" and adjust potentiometer R4 for a DVM reading at test point TP3 that is 2 times the value recorded in step 9.

11. Program ASCII "M1L234Ø" and adjust potentiometer R3 for a DVM reading at test point TP3 that is .63246 times the value recorded in step 9.

12. Program ASCII "M1L224Ø" and measure and record the voltage reading at test point TP2.

13. Program ASCII "M1L214Ø" and adjust potentiometer R1 for a DVM reading at test point TP2 that is 3.1623 times the value recorded in step 12.

14. If the Attenuator Assembly U1, the Modulation Control PCB A3A3 or the Synthesizer Amplifier PCB A4A14 was replaced or any of its components have been replaced, perform steps 3 through 16 of the 5.5 Model 1702 Test and Alignment Procedure located on pages 5-4 and 5-5. Then proceed with steps 16 through 18 of this procedure.

15. With the 1702 in its local mode, set the Front Panel OUTPUT LEVEL to its 1.0V (+13 dBm) setting, then measure and record the voltage at test point TP2.

16. Place the Signal Generator into its Remote Mode via the GPIB interface. Program ASCII "MIL214Ø", and adjust potentiometer R6 for a DVM reading at test point TP2 that is 1.4142 times the value recorded in step 15.

17. Program ASCII "MIL2199", and adjust potentiometer R7 for a DVM reading at test point TP2 that is .7164 times the value recorded in step 15.

18. Program the 1702 for a sweep amplitude from ASCII "L214Ø", to ASCII "L2439", and monitor test point TP2 with an oscilloscope. Verify that the amplitude sweep waveform is monotonic. If not repeat steps 6 through 13 of this procedure and verify.

5.7 SYNTHESIZER A4 PCB ASSEMBLIES TEST AND ALIGNMENT PROCEDURES

The following procedures are provided for the test and alignment of the plug-in PCB's installed in the Synthesizer Assembly A4. Each procedure contains a Test Data Sheet which may be used by the test technician to check off the test steps and enter measurements and indications obtained while performing the procedure. Supporting each procedure is a simplified block diagram of the PCB Assembly to aid in the testing and troubleshooting of the assembly.

NOTE

If any adjustments are made during the performance of these procedures, the Model 1702 Test and Alignment Procedure (paragraph 5.5) must be performed to ensure a properly aligned and operating Model 1702 end item.

The procedures must be performed in sequence and if any adjustment or test verification cannot be achieved, the malfunction causing the faulty indication must be corrected before proceeding to the next step. The procedures are structured to provide fault isolation and with the aid of the schematic diagrams and the detailed circuit description most malfunctions or faults can be easily diagnosed.

Perform as much electrical trouble-shooting as possible to isolate any defective components. The "shot-gun" technique is never as effective as step-by-step trouble-shooting. Shot-gunning will result in good components being damaged on their removal and the possibility of PCB damage.

Some of the circuitry contained on the A4 PCB Assemblies provides functions that are not used by the Model 1702 Signal Generator, i.e.; IF Outputs, Level Detection (Squelch), AGC and other functions that relate to receiver operations. These unused functions are deleted from the following test and alignment procedures, since they do not relate to the Signal Generator's operation and function only with the R-1200A Service Monitor.

5.7.1 10 MHz VCO (A4A2) and DC Discriminator (A4A3), Test and Alignment Procedure

1. Select 010.000 MHz, FM MODULATION MODE and EXT MODULATION SOURCE functions.

2. Monitor test point A4A3TP3 with a DVM and adjust trimmer capacitor A4A3C25 for a reading of 5.5 Vdc on the DVM.

3. Select CW MODULATION MODE and measure test point A4A3TP4 and verify that it is within 0.2 Vdc of the 5.5 Vdc level set in step 2.

4. Connect a Frequency Counter to the front panel RF OUT "N" connector. Select the CW MODULATION MODE and EXT MODULATION SOURCE functions, then note and record the reading on the Frequency Counter on the Test Data Sheet.

5. Select the FM MODULATION MODE and with no input applied to the EXT MOD "BNC" connector adjust potentiometer A4A3R29 (FM ERROR OFFSET) for the same reading on the Frequency Counter that was noted when the CW MODE was selected in step 4.

6. Apply -5.2 Vdc through a 390 Ω resistor to the front panel EXT MOD "BNC" connector. Monitor the error out signal at A4A2 pin E with a DVM and adjust the EXTERNAL control for a -2.00 Vdc DVM reading. Then adjust potentiometer A4A3R18 (DC GAIN) for a 20 kHz increase in frequency as indicated on the Frequency Counter.

7. Monitor test A4A2TP1 with a DVM. Insure that the FM MODULATION MODE and EXT MODULATION SOURCE is selected and that no signal is applied to the EXT MOD "BNC" connector. Then adjust trimmer capacitor A4A2C45 for a 9.5 to 9.9 Vdc DVM reading.

10 MHz VCO (A4A2 AND DC DISCRIMINATOR (A4A3), TEST DATA SHEET

1 and 2. A4A3C25 adjusted for 5.5 Vdc at A4A3TP3 _____(✓)

3. A4A3TP2 is within 0.2 Vdc of the 5.5 Vdc level set in step 2 when CW mode is selected. _____(✓)

4. Output Frequency in the CW mode. _____(✓)

5. A4A3R29 adjusted for same reading as in step 4 when FM mode is selected. _____(✓)

6. EXTERNAL control adjusted for a -2.00 Vdc DVM reading at A4A2 pin E with -5.2 Vdc applied to the EXT "BNC" connector. _____(✓)

   A4A3R18 adjusted for a 20 kHz increase in output frequency. _____(✓)

7. A4A2C45 adjusted for 9.5 to 9.9 Vdc at A4A2TP1 _____(✓)

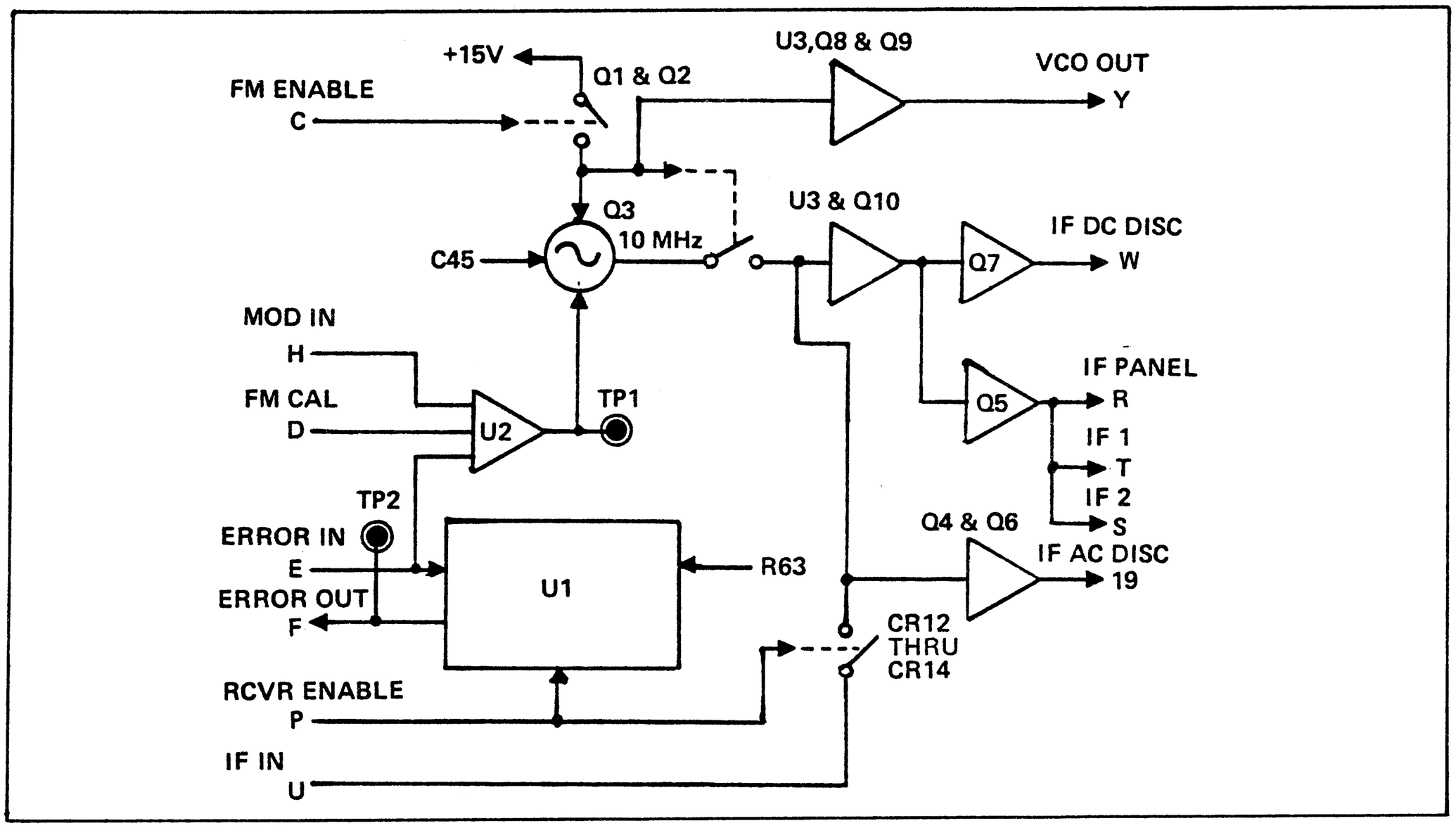

FIGURE 5-4 10 MHz VCO (A4A2) SIMPLIFIED BLOCK DIAGRAM

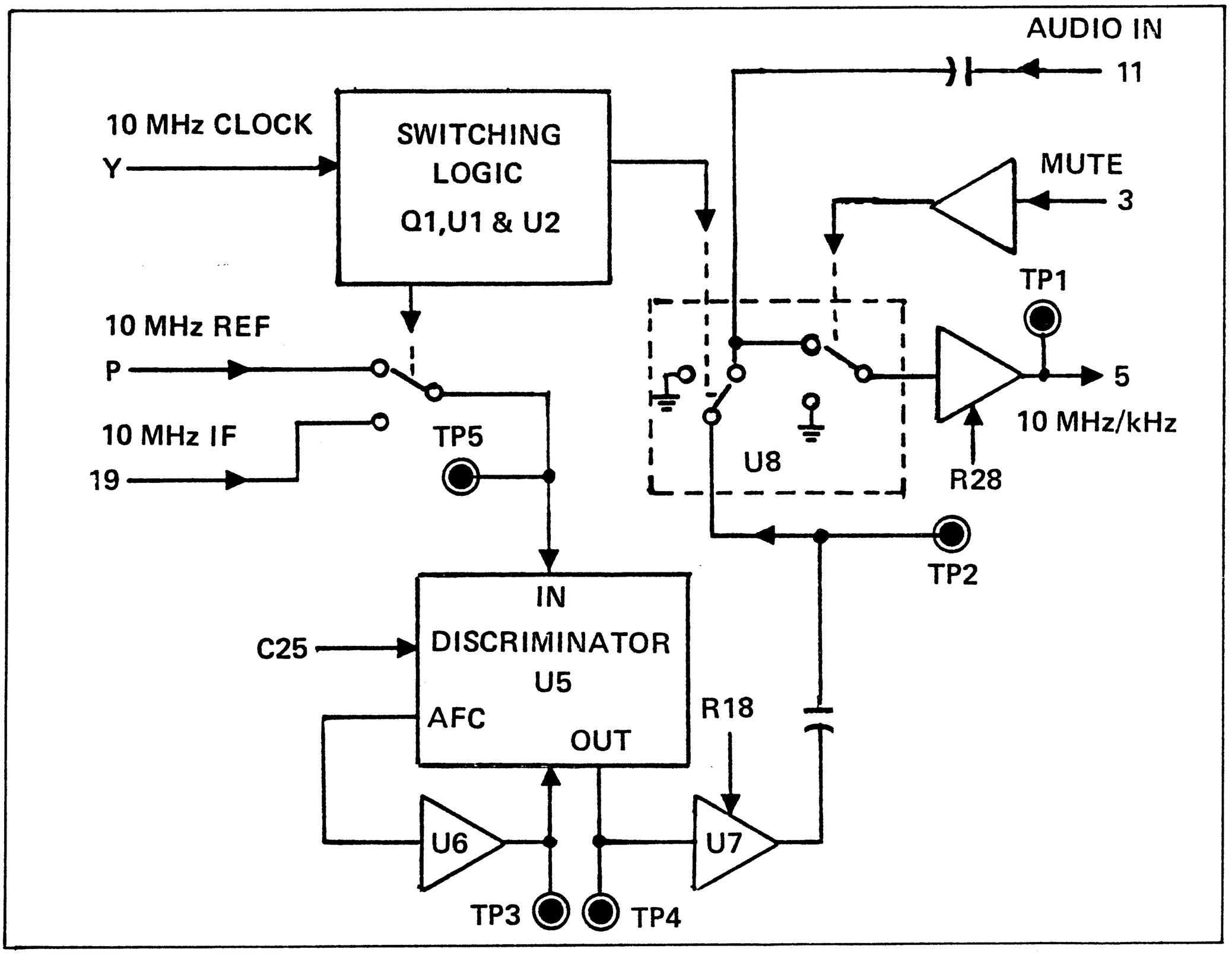

FIGURE 5-5 DC DISCRIMINATOR (A4A3) SIMPLIFIED BLOCK DIAGRAM

5.7.2 AC Discriminator (A4A1) Test and Alignment Procedure

1. Set the front panel controls as follows:

MODULATION MODE	FM
MODULATION SOURCE	EXT
ATTENUATION	-20 dB
OUTPUT LEVEL	1.0V
Frequency Switch	010.0000 - MHz

2. Monitor test point A4A1TP1 with a DVM and adjust trimmer capacitor A4A1C17 for a 5.5 Vdc DVM reading.

3. Reinstall the Synthesizer Assembly top cover. Apply a 999.1 Hz signal from an Audio Synthesizer to the EXT MOD "BNC" connector. Adjust the MODULATION EXTERNAL control for a 19.99 kHz indication on the front panel 3-1/2 digit LED MODULATION display.

4. Connect a Frequency Counter to the front panel RF OUT "N" connector and set the Frequency Counter for a 1 Hz resolution readout.

5. Monitor the Frequency Counter, noting that the count will vary from minimum to maximum in a 10 second period. The difference between the minimum and maximum count is the peak-to-peak beat note.

6. Adjust potentiometer A4A1R1 (Gain) to obtain a minimum peak-to-peak beat note. Record the value of the beat note on the Test Data Sheet, verifying that it is less than 800 Hz.

7. Adjust the MODULATION EXTERNAL control for a 05.00 kHz indication on the 3-1/2 digit LED display. Ascertain the value of the peak-to-peak beat note for 5 kHz deviation and record it on the Test Data Sheet, verifying that it is less than 200 Hz.

AC DISCRIMINATOR (A4A1) TEST DATA SHEET

1. 1702 front panel controls configured for 010.0000 MHz FM EXT MODULATION. _____(✓)
2. A4A1C17 adjust for 5.5 Vdc DVM reading at A4A1TP1. _____(✓)
3. 999.1 Hz applied as the external modulation source and adjusted for 19.99 kHz deviation. _____(✓)

4. and 5. Beat note measurement configuration set up. _____(✓)

6. A4A1R1 adjusted for a minimum beat note at 20 kHz deviation $\leq$ 800 Hz. _____(✓)
7. Minimum beat note at 5 kHz deviation $\leq$ 200 Hz. _____(✓)

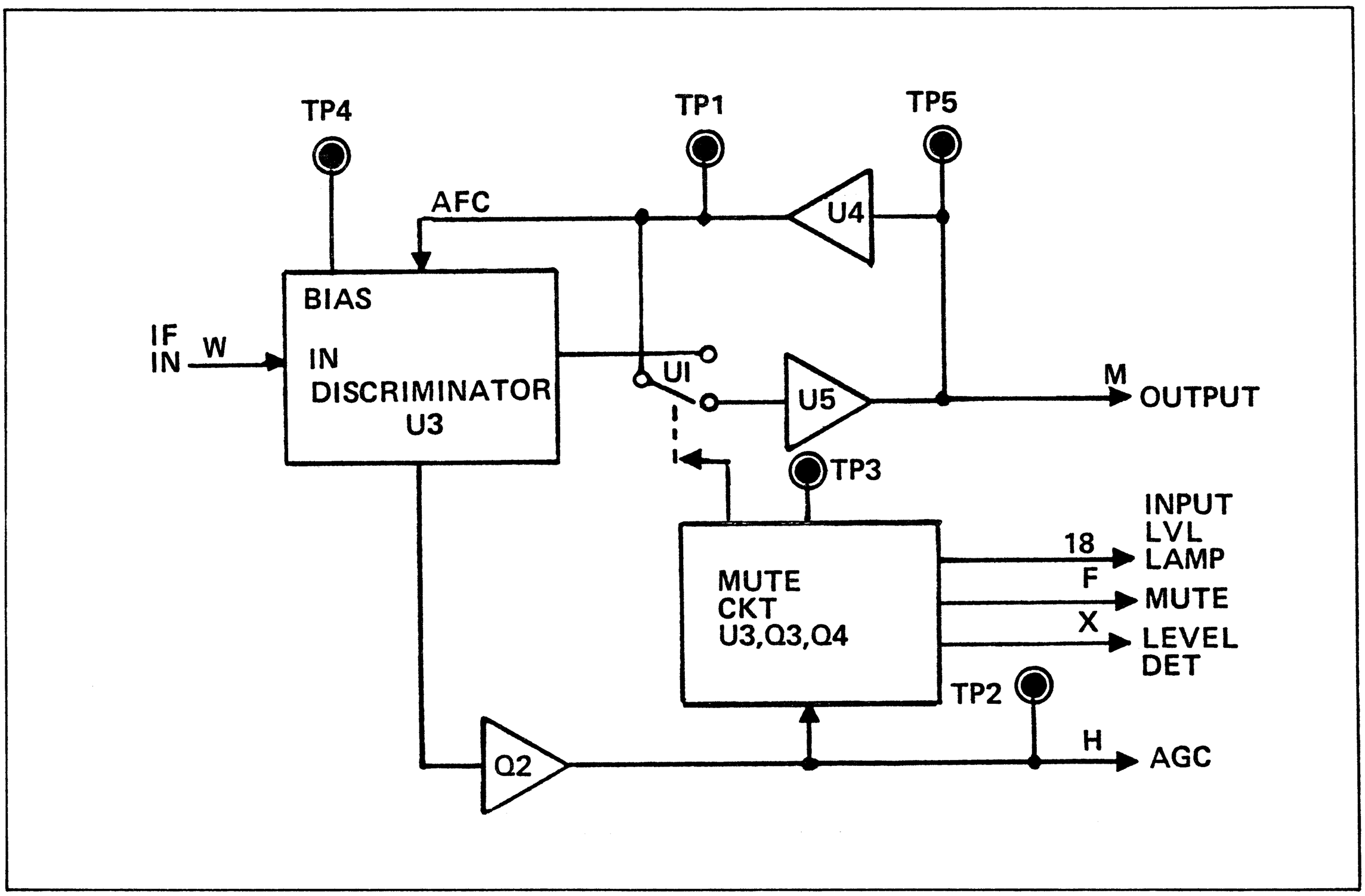

FIGURE 5-6 AC DISCRIMINATOR (A4A1) SIMPLIFIED BLOCK DIAGRAM

5.7.3 Time Base (A4A4) Test and Alignment Procedure

1. Connect a Frequency Counter to the front panel RF OUT "N" connector. Select the CW MODE. Program the FREQUENCY MHz selector switch for each frequency listed on the test data sheet, the switch settings and the Frequency Counter's readout should be identical.

2. Connect the Frequency Counter to the 1 kHz OUT "BNC" connector, select INT MODULATION SOURCE, the FM MODULATION MODE and rotate the INTERNAL MODULATION control to MAX (fully CW). Then verify a 1 kHz reading on the Frequency Counter and a 20.0 kHz-FM indication on the front panel 3-1/2 digits MODULATION display.

3. Momentarily ground A4A4 edge connector pin T, and verify that the LOCK indicator extinguishes and re-illuminates.

4. Momentarily short pins 1 and 7 together on A4A4 edge connector, and verify that the LEVEL indicator flashes and then returns to a steady state illumination.

5. Momentarily short pins 7 and 10 together on A4A4 edge connector, and verify that the LEVEL indicator extinguishes and then re-illuminates.

TIME BASE PCB (A4A4), TEST DATA SHEET

		COUNTER READING CORRECT (✓)
1.	FREQUENCY MHz SWITCH SETTING	
	001.0000	_____
	101.1111	_____
	222.2222	_____
	444.4444	_____
	888.8888	_____
2.	1 kHz counter reading	_____ (✓)
	20.0 kHz-FM display indication	_____ (✓)
3.	LOCK indicator extinguishes and re-illuminates	_____ (✓)
4.	LEVEL indicator flashes	_____ (✓)
5.	LEVEL indicator extinguishes and re-illuminates	_____ (✓)

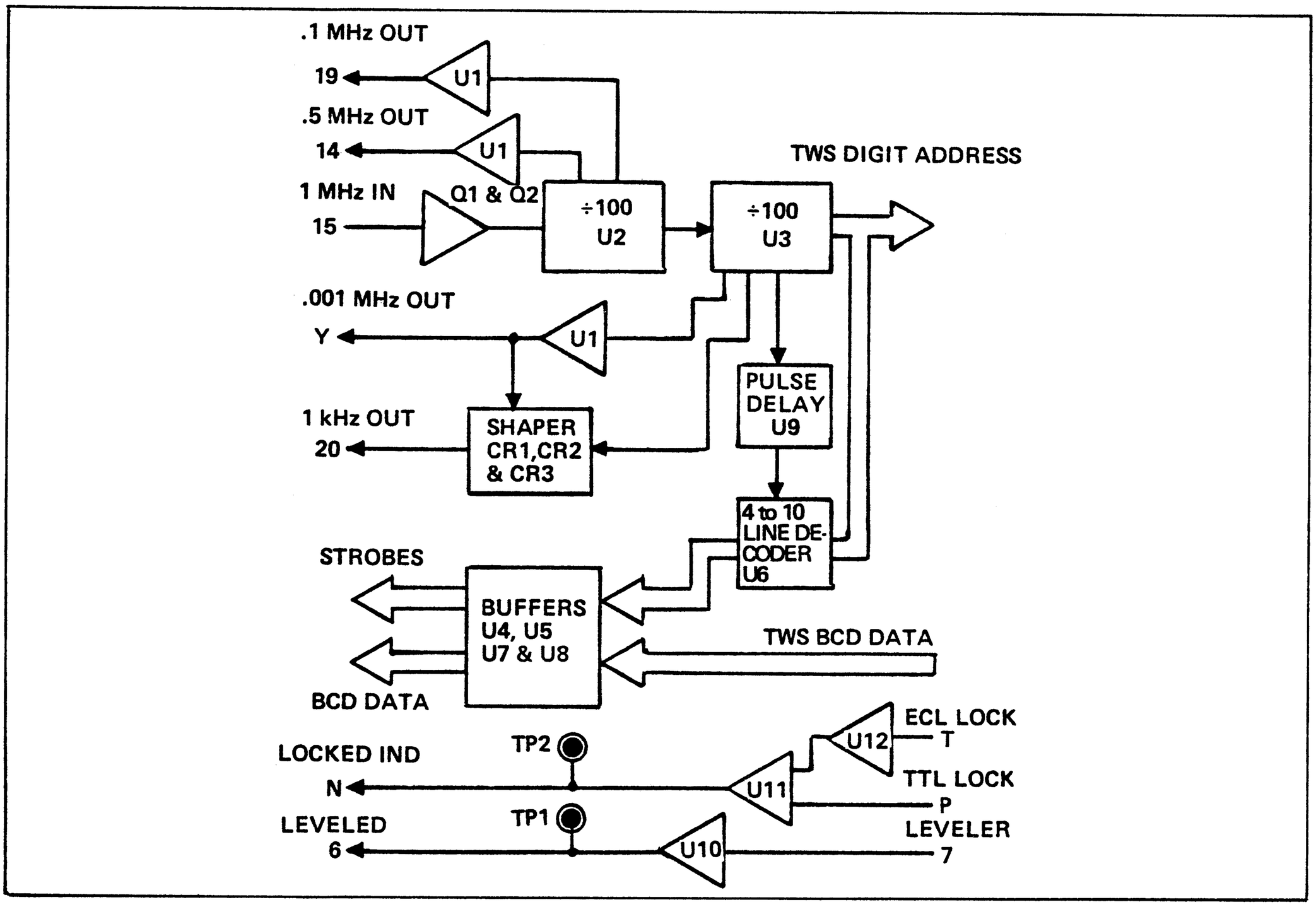

FIGURE 5-7 TIME BASE (A4A4) SIMPLIFIED BLOCK DIAGRAM

5.7.4 Source 2 (A4A5) Part #05362401 Test and Alignment

1. Program the FREQUENCY-MHz switch to 999.9999. Connect a DVM to test point A4A5TP2. Adjust inductor A4A5L1 for a +9.5 Vdc reading on the DVM.

2. Program the FREQUENCY-MHz switch to 000.0000. Verify a DVM reading at test point A4A5TP2 of between +2 Vdc and +4 Vdc.

3. Connect a Frequency Counter to test point A4A5TP1. Verify the Frequency Counter's readout for each FREQUENCY MHz switch setting shown in the table on the test data sheet. Verify that the LOCK indicator illuminates for each setting of the FREQUENCY MHz switch.

NOTE

Any three MSD setting may be used for this test and are indicated as XXX on the table.

4. Momentarily short test point A4A5TP3 to ground and verify that the LOCK indicator extinguishes and re-illuminates.

5. Connect an Oscilloscope to test point A4A5TP2. Adjust potentiometer. A4A5R9 to minimize any 1 kHz components present on the wave form, and verify that they are <-15 dBm.

SOURCE 2 PCB (A4A5) TEST DATA SHEET

1. Adjust A4A5L1 for +9.5 Vdc @ A4A5TP2. _____ (✓)

2. +2 Vdc to +4 Vdc @ A4A5TP2 when FREQUENCY-MHz switch is set to 000.0000

3.

FREQUENCY-MHz SWITCH SETTING	FREQUENCY COUNTER READING (MHz)		LOCK INDICATOR	
XXX.0000	10.0000	(✓)	_____	(✓)
XXX.1111	11.111	(✓)	_____	(✓)
XXX.2222	12.222	(✓)	_____	(✓)
XXX.4444	14.444	(✓)	_____	(✓)
XXX.8888	18.888	(✓)	_____	(✓)
XXX.9999	19.999	(✓)	_____	(✓)

4. LOCK indicator extinguishes when A4A5TP3 is shorted to ground _____ (✓)

5. A4A5R9 adjusted for minimum (<-15 dBm) 1 kHz components at A4A5TP2 _____ (✓)

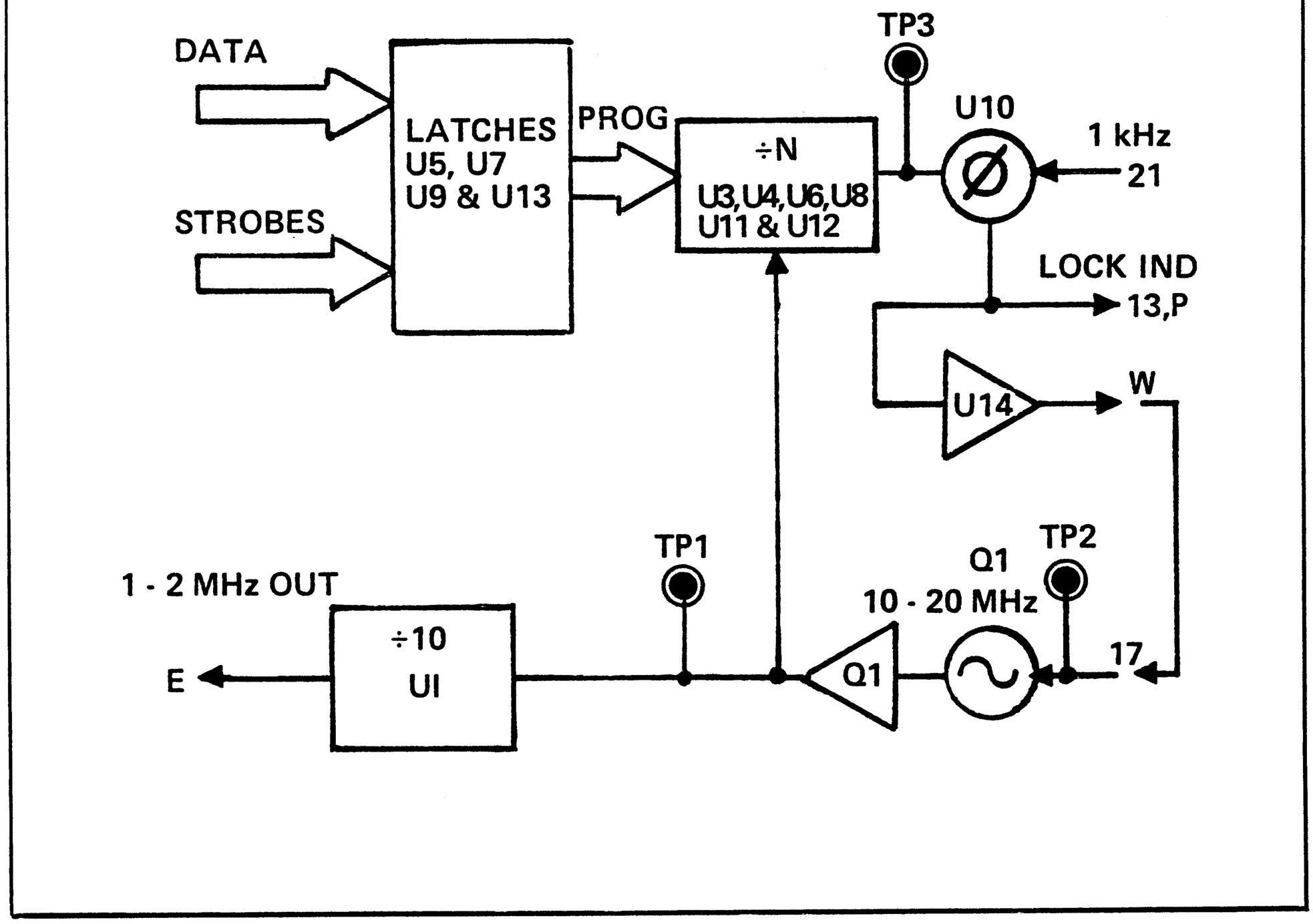

FIGURE 5-8 SOURCE 2 (A4A5) PART #0536240l SIMPLIFIED BLOCK DIAGRAM

5.7.5 Source 2 PCB Option 06 and 07 Part #0570051 (A4A5) Test and Alignment Procedure

1. Program the FREQUENCY-MHz switch to 999.9999. Connect a DVM to test point A4A5TP2. Adjust inductor A4A5L1 for a +9.5 Vdc reading on the DVM.

2. Program the FREQUENCY-MHz switch to 000.0000. Verify a DVM reading at test point A4A5TP1 of between +2 Vdc and +4 Vdc.

3. Connect a Frequency Counter to test point A4A5TP1. Verify the Frequency Counter's readout for each FREQUENCY MHz switch setting shown in the table on the test data sheet. Verify that the LOCK indicator illuminates for each setting of the FREQUENCY MHz switch.

NOTE

Any three MSD setting may be used for this test and are indicated as XXX on the table.

4. Momentarily short test point A4A5TP3 to ground and verify that the LOCK indicator extinguishes and re-illuminates.

5. Connect an Oscilloscope to test point A4A5TP2. Adjust potentiometer A4A5R9 to minimize any 10 kHz components present on the wave form, and verify that they are <-15 dBm.

SOURCE 2 PCB (A4A5) TEST DATA SHEET

1. Adjust A4A5L1 for +9.5 Vdc @ A4A5TP2. _____(✓)

2. +2 Vdc to +4 Vdc @ A4A5TP2 when FREQUENCY-MHz switch is set to 000.0000

3.

FREQUENCY-MHz SWITCH SETTING	FREQUENCY COUNTER READING (MHz)	LOCK INDICATOR ILLUMINATES
XXX.0000	100.000 _____(✓)	_____(✓)
XXX.1111	111.111 _____(✓)	_____(✓)
XXX.2222	122.222 _____(✓)	_____(✓)
XXX.4444	144.444 _____(✓)	_____(✓)
XXX.8888	188.888 _____(✓)	_____(✓)
XXX.9999	199.999 _____(✓)	_____(✓)

4. LOCK indicator extinguishes when A4A5TP3 is shorted to ground _____(✓)

5. A4A5R9 adjusted for minimum 10 kHz (<-15 dBm) components a A4A5TP2 _____(✓)

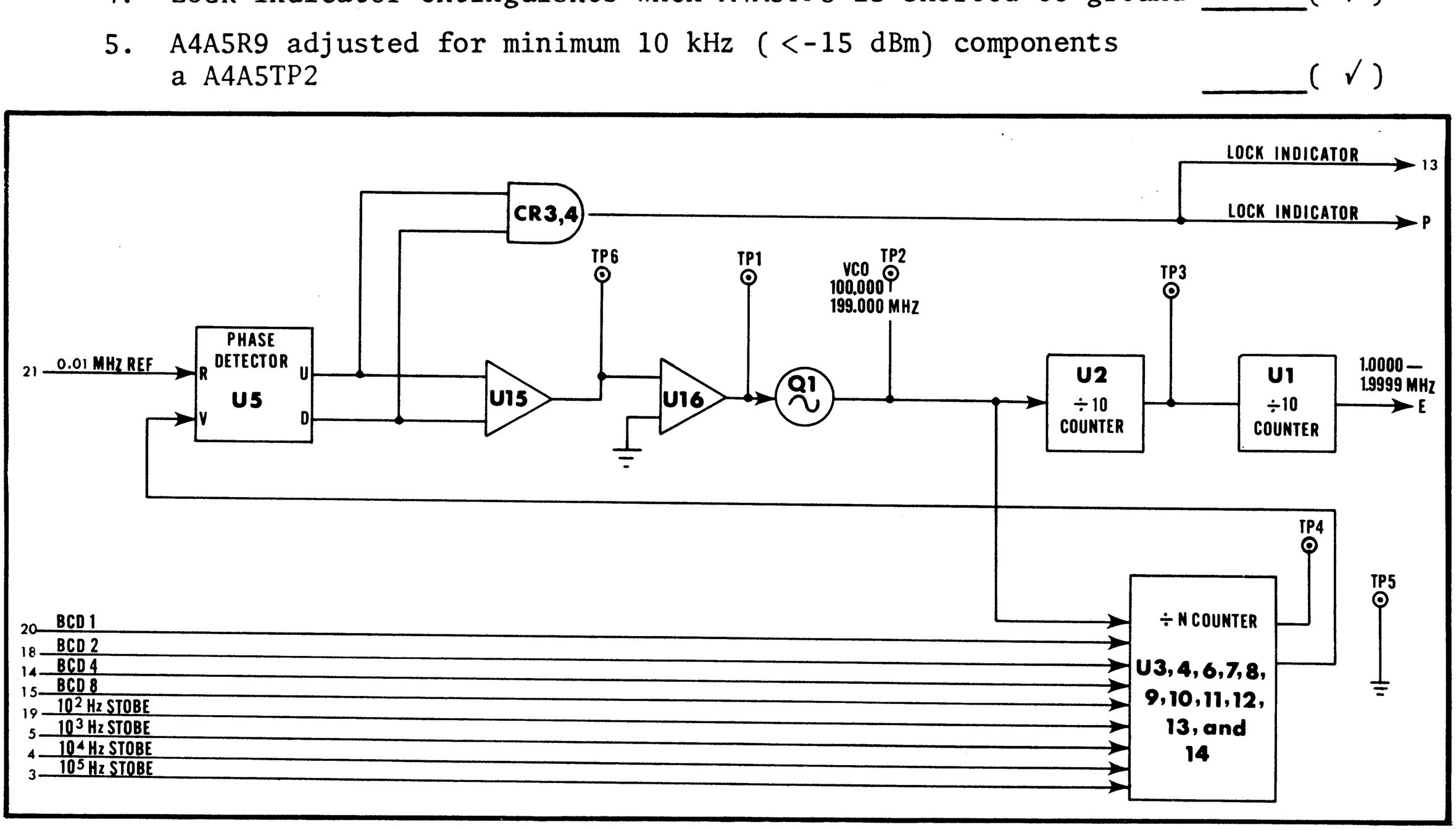

FIGURE 5-9 SOURCE 2 (A4A5) PART #0570051 SIMPLIFIED BLOCK DIAGRAM

5.7.6 Source 3 PCB (A4A6) Test and Alignment Procedure

1. Program the FREQUENCY-MHz switch to 000.0000. Connect a DVM to test point A4A6TP3. Adjust inductor A4A6L2 for a DVM of +5.5 Vdc.

2. Connect a Frequency Counter to test point A4A6TP4 and verify a reading of 11.000 MHz.

3. Momentarily short test point A4A6TP2 to ground, and verify that the LOCK indicator extinguishes and re-illuminates.

4. Select INT MODULATION SOURCE and FM MODULATION MODE. Rotate the INTERNAL MODULATION control to MAX (fully CW). Then verify that the LOCK indicator remains illuminated.

SOURCE 3 PCB (A4A6) TEST DATA SHEET

1.	A4A6L2 adjusted for 5 Vdc at A4A6TP3.	_____(✓)
2.	A4A6TP4 indicates a frequency of 11.000 MHz.	_____(✓)
3.	LOCK indicator extinguishes and re-illuminates when test point A4A6TP2 is shorted to ground.	_____(✓)
4.	FM performance normal (LOCK indicator remain illuminated).	_____(✓)

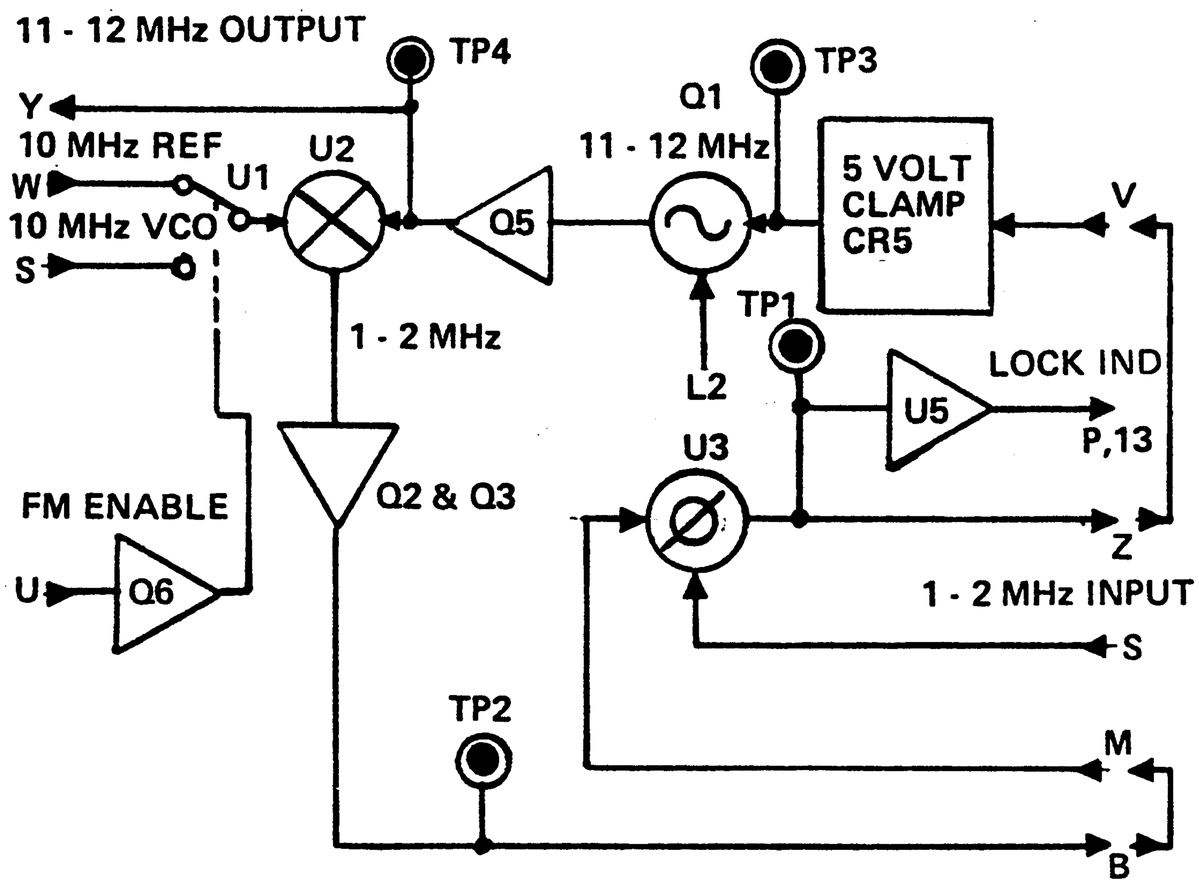

FIGURE 5-10 SOURCE 3 (A4A6) SIMPLIFIED BLOCK DIAGRAM

5.7.7 400 MHz Reference Generator PCB (A4A8) Test and Alignment Procedure

1. Observe the voltage level on test point A4A8TP2 with an Oscilloscope. Verify that is between +5 Vdc and +12 Vdc with no ac component present.

2. Measure the frequency of the wave form on A4A8TP1 with a Frequency Counter and verify that it is 1.0000 MHz ±1 count.

3. Connect a Spectrum Analyzer to coax connector A4A8J1. Program the Thumbwheel switches to 100.0000 MHz. Verify that the level of the 400 MHz signal is 0 dBm.

4. Connect an Oscilloscope (ac coupled) to test point A4A8TP2. Adjust trimmer capacitor A4A8C21 to minimize any 1 MHz component present on the wave form.

5. Program the FREQUENCY-MHz switch to 200.0000 MHz. Connect a Spectrum Analyzer to coax connector A4A8J1 and verify that the 400 MHz signal is at least -50 dB down from the level measured in step 3.

6. Connect an Oscilloscope to A4A8 PCB edge connector pin 16. Verify a square wave of 0.3 V ±0.1 V p-p in amplitude.

7. Connect an Oscilloscope to A4A8 PCB edge connector pin 18. Verify a square wave of 30 mV ±10 mV p-p in amplitude.

8. Momentarily short test point A4A8TP1 to ground. Verify that the LOCK indicator extinguishes and re-illuminates.

400 MHz REFERENCE GENERATOR PCB (A4A8) TEST DATA SHEET

1.	A4A8TP2 voltage.	____ Vdc (+5 - +15 Vdc)
2.	A4A8TP1 frequency 1.000 MHz.	____ (✓)
3.	A4A8J1 400 MHz level.	____ dBm (≥0 dBm)
4.	A4A8TP2 1 MHz component minimized.	____ ( )
5.	400 MHz Attenuation.	____ (≥-50 dB)
6.	A4A8 pin 16 wave form.	____ V p-p (.2 - .4V)
7.	A4A8 pin 18 wave form.	____ mV p-p (20-40 mV)
8.	LOCK indicator extinguishes and re-illuminates	____ (✓)

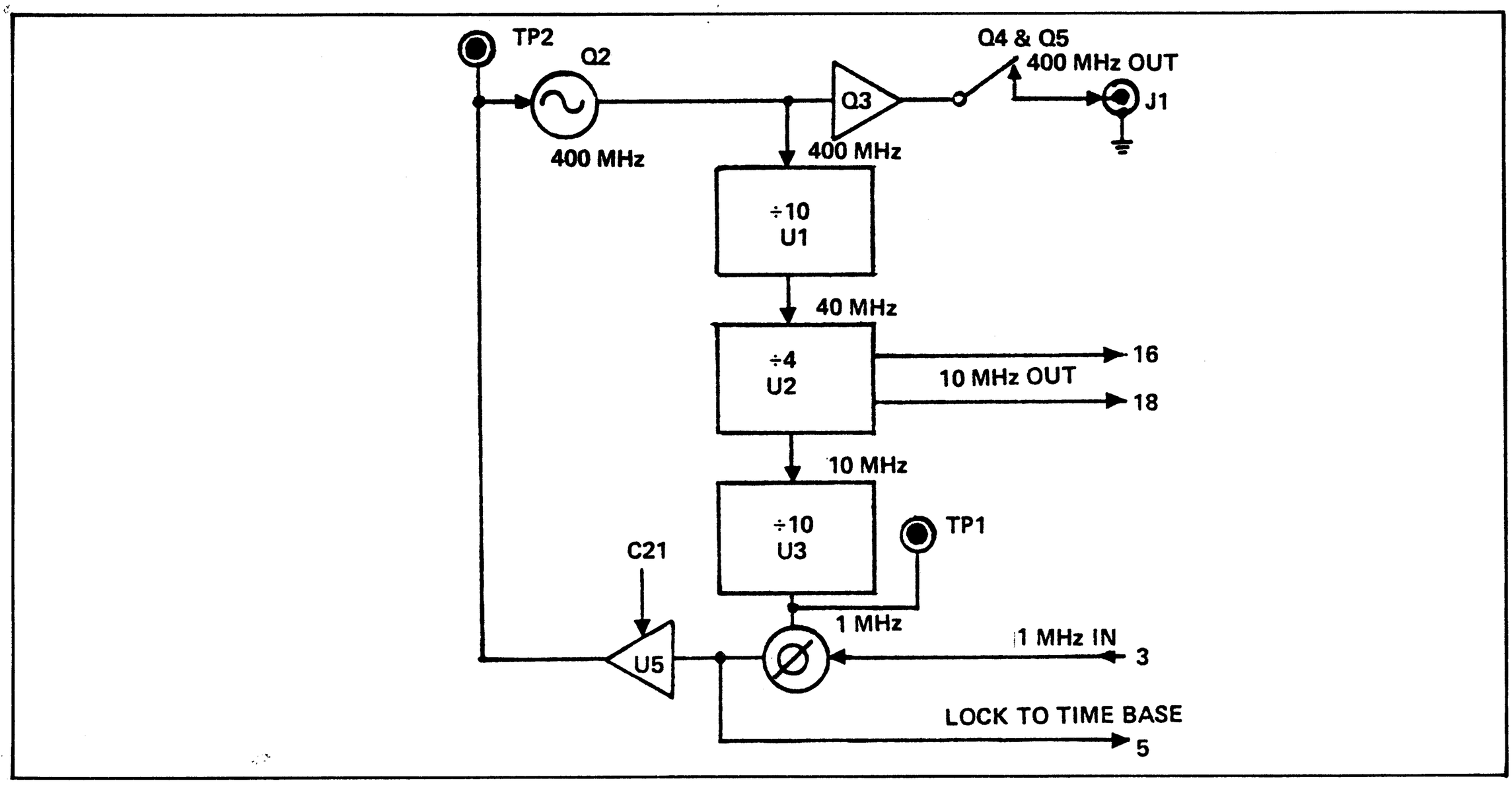

FIGURE 5-11 400 MHz REFERENCE GENERATOR PCB (A4A8) SIMPLIFIED BLOCK DIAGRAM

5.7.8 Logic Control PCB (A4A9) Test and Alignment Procedure

1. Connect a Frequency Counter to the RF OUT front panel "N" connector with a 50Ω termination.

2. Select the CW MODULATION MODE and verify the frequency measured by the counter for each frequency setting of the FREQUENCY-MHz switch as shown on the Test Data Sheet.

LOGIC CONTROL PCB (A4A9) TEST DATA SHEET

FREQUENCY-MHz SWITCH SETTING	FREQUENCY COUNTER READING IN MHz	
011.0000	011.0000	_____(✓)
100.0000	100.0000	_____(✓)
111.0000	111.0000	_____(✓)
140.0000	140.0000	_____(✓)
199.0000	199.0000	_____(✓)
222.0000	222.0000	_____(✓)
333.0000	333.0000	_____(✓)
444.0000	444.0000	_____(✓)
555.0000	555.0000	_____(✓)
666.0000	666.0000	_____(✓)
777.0000	777.0000	_____(✓)
888.0000	888.0000	_____(✓)
999.0000	999.0000	_____(✓)

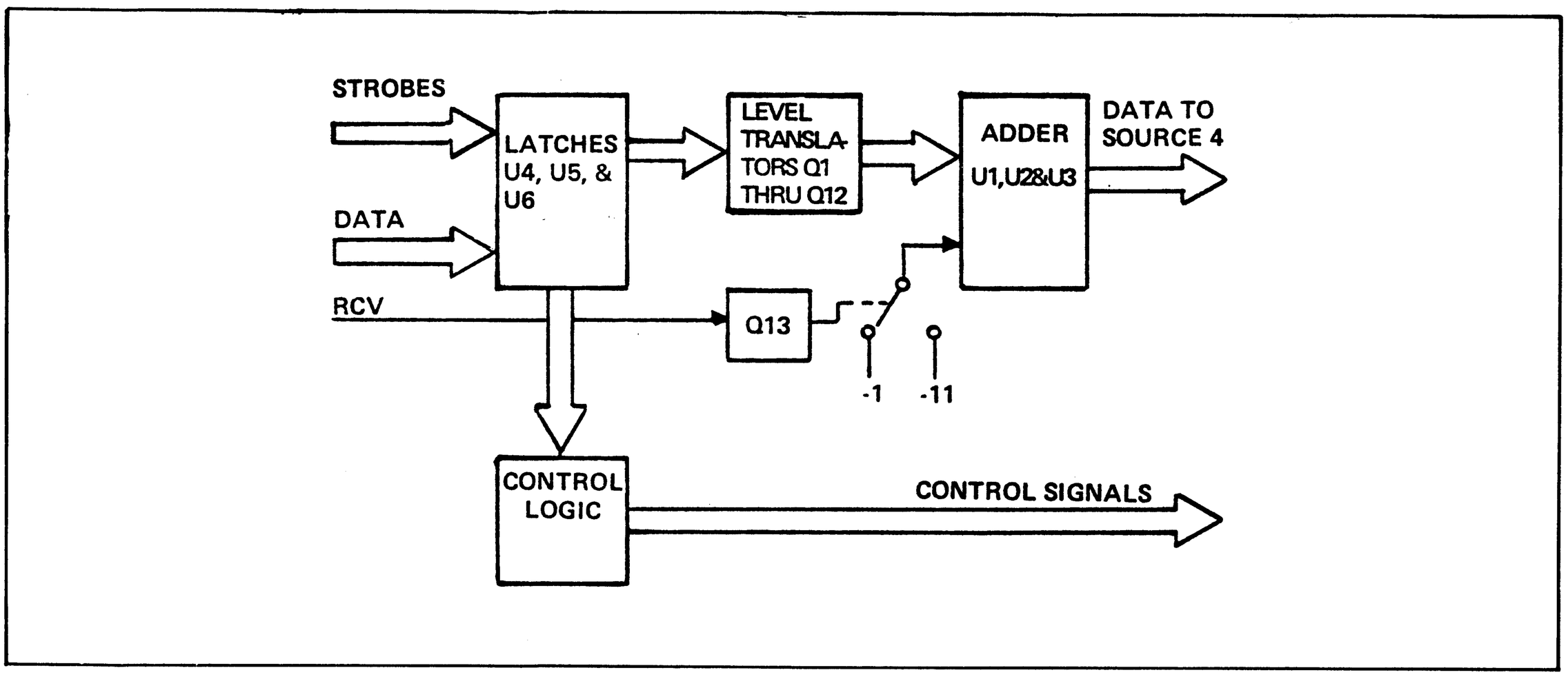

FIGURE 5-12 LOGIC CONTROL PCB (A4A9) SIMPLIFIED BLOCK DIAGRAM

5.7.9 Divide By N PCB (A4A10) Test and Alignment Procedure

1. Select the CW MODULATION MODE. Program the FREQUENCY-MHz switch to 200.0000. Connect a Frequency Counter to test point A4A10TP3. Verify that the Frequency Counter reads 1.0000 MHz.

2. Measure the voltages at PCB A4A10 edge connector pins Y and 21 with a DVM, and verify a level between +1.5 Vdc and +3.0 Vdc.

3. Program the FREQUENCY-MHz switch for 600.0000 MHz. Verify the frequency of the signal at test point A4A10TP3 with a counter for 500 kHz.

4. Program the FREQUENCY-MHz switch for 299.0000 MHz. Measure the voltages at PCB A4A10 edge connector pins Y and 21 with a DVM and verify a level between +8 Vdc and +12 Vdc.

5. Connect a Frequency Counter to test point A4A10TP2. Measure the frequency for each setting of the FREQUENCY-MHz switch shown in the table on the Test Data Sheet, and verify that the LOCK indicator illuminates after each setting.

6. Momentarily short A4A10TP3 to ground. Verify that the LOCK indicator extinguishes and re-illuminates.

7. Connect a Spectrum Analyzer to the SMA A4J21 (RF OUT) connector. Program the FREQUENCY-MHz switch for 600.0000 MHz. Adjust the Spectrum Analyzer to display any 1 MHz and 0.5 MHz sidebands that may be present on the 600 MHz signal. Adjust trimmer capacitor A4A10C5 to minimize the sideband and verify that they are less than -55 dBc.

DIVIDE BY N PCB (A4A10) TEST DATA SHEET

1. Counter indicates 1 MHz at A4A10TP3 _____(✓)
2. Voltage readings A4A10 pin Y _____ V (+1.5 to 3 Vdc)
   A4A10 pin 21 _____ V (+1.5 to 3 Vdc)
3. 500 kHz at A4A10TP3 _____(✓)
4. Voltages readings A4A10 pin Y _____ V (+8 to +12 Vdc)
   A4A10 pin 21 _____ V (+8 to +12 Vdc)
5.

FREQUENCY-MHz SWITCH SETTINGS	FREQUENCY READING AT A4A10TP2 (MHz)	(✓)
122.0000	1.000	_____
211.0000	1.000	_____
433.0000	1.000	_____
855.0000	0.500	_____
999.0000	0.500	_____

LOCK indicator illuminates after each FREQUENCY-MHz switch setting _____(✓)

6. LOCK indicator extinguishes and re-illuminates _____ (✓)

7. 1 MHz sidebands @ 600 MHz _____ dBc (-55 dBc)

   0.5 MHz sideband @ 600 MHz _____ dBc (-55 dBc)

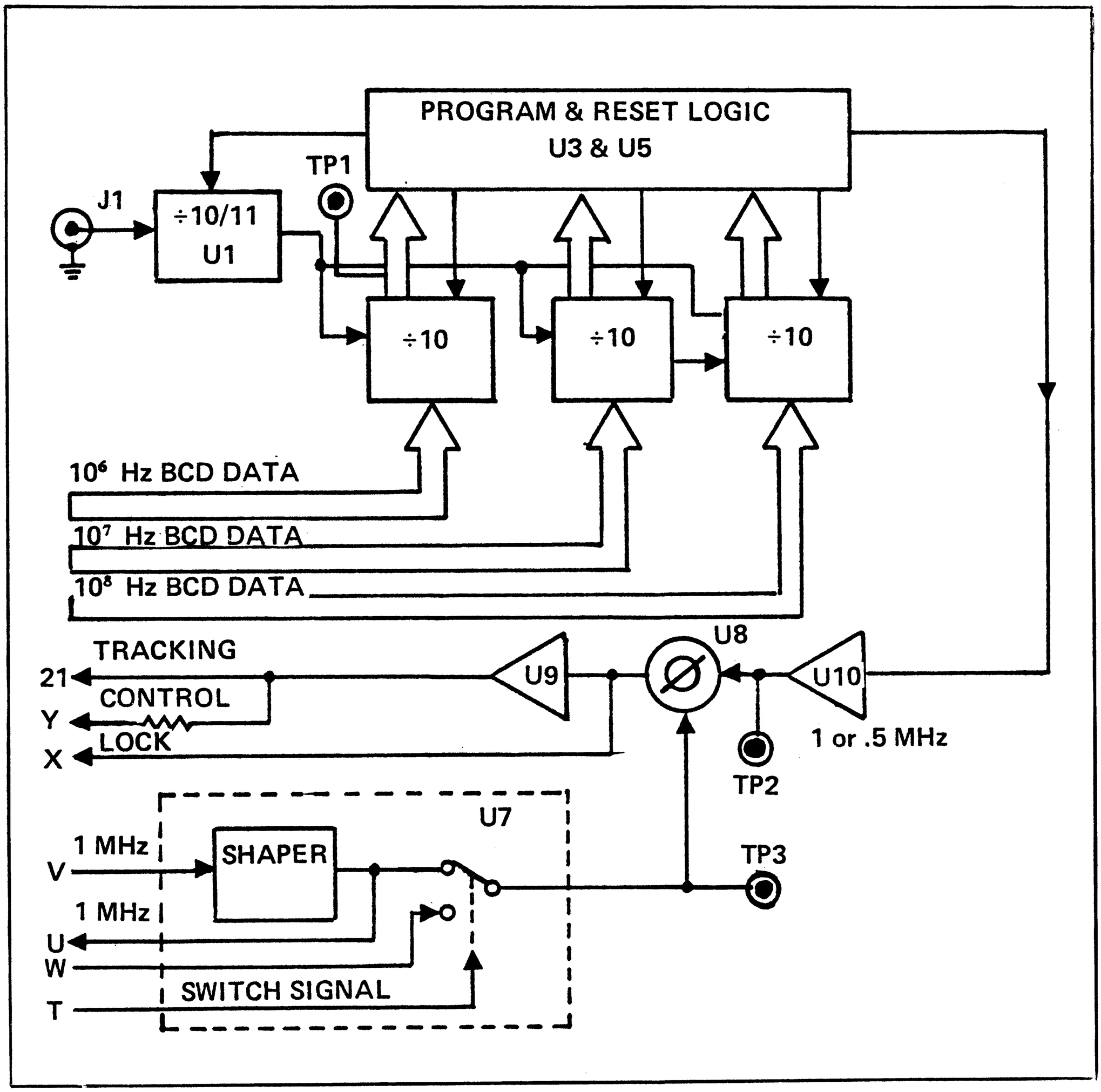

FIGURE 5-13 DIVIDE BY N PCB (A4A10) SIMPLIFIED BLOCK DIAGRAM

5.7.10 Source 4 PCB (A4A11) Test and Alignment Procedure

1. Select the CW MODULATION MODE. Connect an Oscilloscope to test point A4A11TP1. Program the FREQUENCY-MHz switch to 110.0000. Adjust the turns spacing of inductors A4A11L3 and A4A11L4 for an Oscilloscope indication of +1.5 to +2.5 Vdc.

2. Program the FREQUENCY-MHz switch to 200.0000. Adjust the turns spacing of inductors A4A11L7 and A4A11L8 for an Oscilloscope indication of +1.5 to +2.5 Vdc at test point A4A11TP1.

3. Program the FREQUENCY-MHz switch to 300.0000. Adjust the turns spacing of inductor A4A11L11 for an Oscilloscope indication of +1.5 to +3.0 Vdc at test point A4A11TP1.

4. Program the FREQUENCY-MHz switch to 400.0000. Adjust the turns spacing of inductor A4A11L15 for an Oscilloscope indication of +1.5 to +3 Vdc at test point A4A11TP1.

5. Connect a Spectrum Analyzer to coax connector A4A11J1. Program the FREQUENCY-MHz switch for all frequencies from 110.0000 MHz to 990.0000 MHz in 10 MHz increments. Verify an output level of at least +3 dBm for each frequency setting. For frequencies of 500.0000 MHz and above, a component at half the output frequency will be present. This sub-harmonic should have a level of 3 dB below the level of the desired output frequency.

NOTE

The voltage levels observed at test point A4A11TP1 in steps 1 through 8 should have no ac components present. When adjusting the inductor turn spacings, maintain as even a spacing as possible.

SOURCE 4 PCB (A4A11) TEST DATA SHEET

STEP	FREQUENCY (MHz)	ADJUSTMENT (Turn Spacing)	A4A11TP1 (Vdc)	
1	110.0000	A4A11L3 and L4	_____	
2	200.0000	A4A11L7 and L8	_____	
3	300.0000	A4A11L11	_____	
4	400.0000	A4A11L15	_____	
Note: No ac components present on test point A4A11TP1.			_____	(✓)
5. Output level ≥ +3 dBm at all frequencies from 110.0000 to 990.0000 MHz.			_____	(✓)
Sub-Harmonics at 500 MHz and above -3 dBc.			_____	(✓)

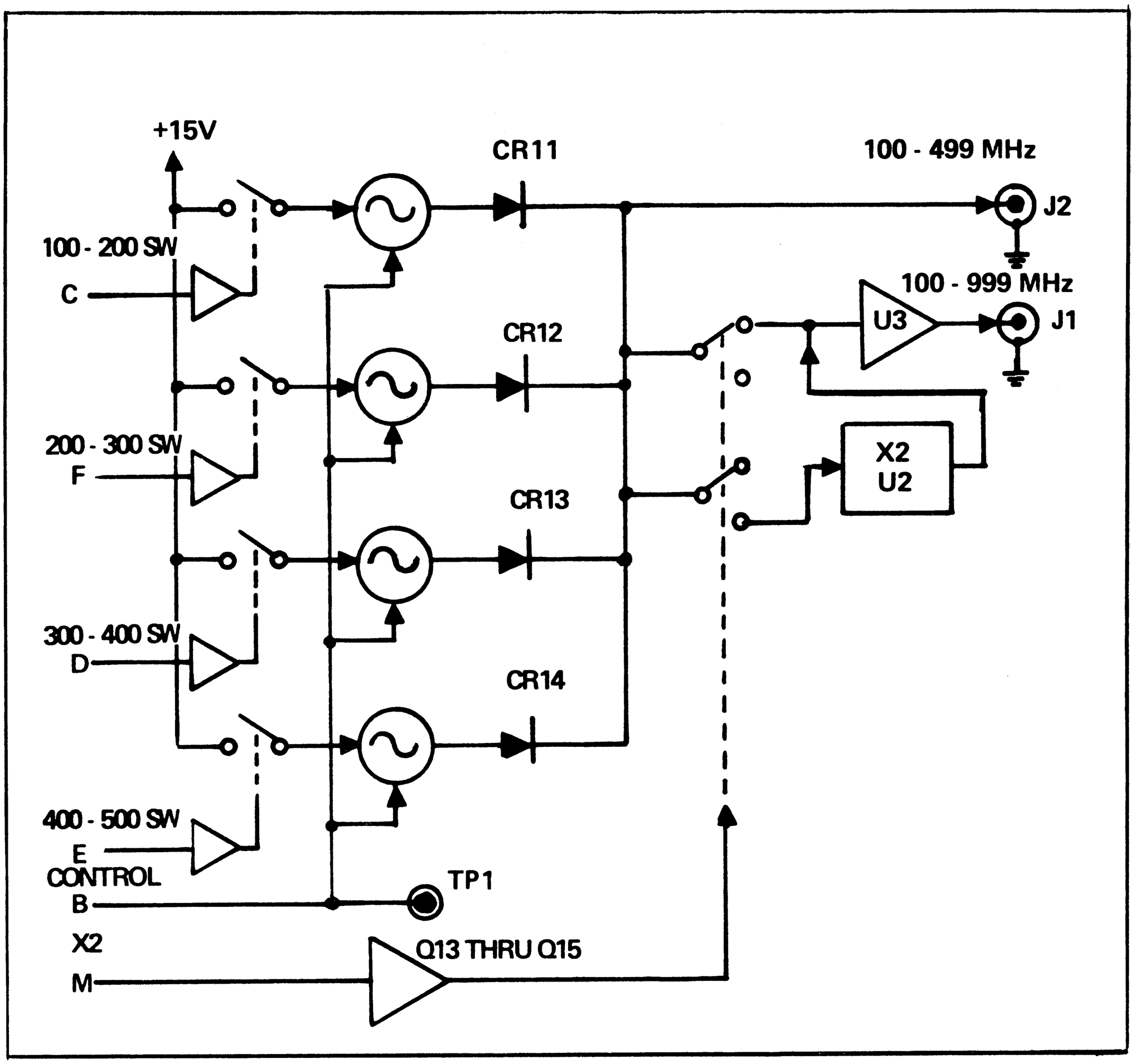

FIGURE 5-14 SOURCE 4 PCB (A4A11) SIMPLIFIED BLOCK DIAGRAM

5.7.11 Source 5 PCB (A4A13) Test and Alignment Procedure

1. Connect an Oscilloscope to test point A4A12TP4 (located on the Phase Detector PCB). Select CW MODULATION MODE and program the FREQUENCY-MHz switch for 110.0000. Adjust the turn spacing of inductors A4A13L1 and A4A13L2 for an Oscilloscope indication of +1.5 to +2.0 Vdc at test point A4A12TP4.

2. Program the FREQUENCY-MHz switch for 200.0000. Adjust the turn spacing of inductors A4A13L3 and A4A13L4 for an Oscilloscope indication of +1.5 to +2.0 Vdc at test point A4A12TP4.

3. Program the FREQUENCY-MHz switch for 300.0000. Adjust the turn spacing of inductor A4A13L5 for an Oscilloscope indication of +1.5 to +2.0 Vdc at test point A4A12TP4.

NOTE

The following two steps relate only to the older Source 5 PCB that does not utilize a hybrid oscillator circuit.

4. Program the FREQUENCY-MHz switch for 400.0000. Adjust the turn spacing of inductor A4A13L6 for an Oscilloscope indication of +2.0 to +4.0 Vdc at test point A4A12TP4.

5. Program the FREQUENCY-MHz switch for 600.0000. Connect an Oscilloscope to test point A4A12TP3 (located on Phase Detector PCB A4A12). Adjust the length of the inductor strap of A4A13L7 if necessary, so that the Oscilloscope indicates a +1.5 to +2.5 Vdc level on test point A4A12TP3.

6. Connect a Spectrum Analyzer to coax connector A4A13J2. Program the FREQUENCY-MHz switch from 110.0000 to 990.0000 in 10 MHz increments. Verify that the output level (at A4A13J2) is flat to within ±6 dB, and that all harmonics are ≤-25 dBc.

7. Connect a DVM to test point A4A12TP4. Program the FREQUENCY-MHz switch from 199.0000 to 399.0000 in 100 MHz increments and verify that the DVM reading is <18 Vdc.

8. Connect the DVM to test point A4A12TP3. Program the FREQUENCY-MHz switch to 999.0000 and verify that the DVM reading is <20 Vdc.

NOTES

1. *Oscilloscope voltage level observed in steps 1 through 10 should have no ac components present.*
2. *When adjusting the turn spacing of the Oscillator inductors, maintain as even a spacing as possible.*
3. *Ensure that the Spectrum Analyzer's front-end is not overloaded, thus self generating its own harmonics.*

SOURCE 5 PCB (A4A13) TEST DATA SHEET

STEP	FREQUENCY (MHz)	ADJUSTMENT (Turn Spacing)	VOLTAGE (Vdc)
1	110.0000	A4A13L1 and L2	_____ (1.5-2.0)
2	200.0000	A4A13L3 and L4	_____ (1.5-2.0)
3	300.0000	A4A13L5	_____ (1.5-2.0)
4	400.0000	A4A13L6	_____ (2.0-4.0)
5	600.0000	A4A13L7	_____ (1.5-2.5)

Note: No ac component present on voltage levels steps 1 through 5. _____ (✓)

6. Output at A4A13J2 ±6 dB, Harmonics ≤ 25 dBc. _____(✓)

7. A4A12TP4 < 18 Vdc. _____(✓)

8. A4A12TP3 < 20 Vdc. _____(✓)

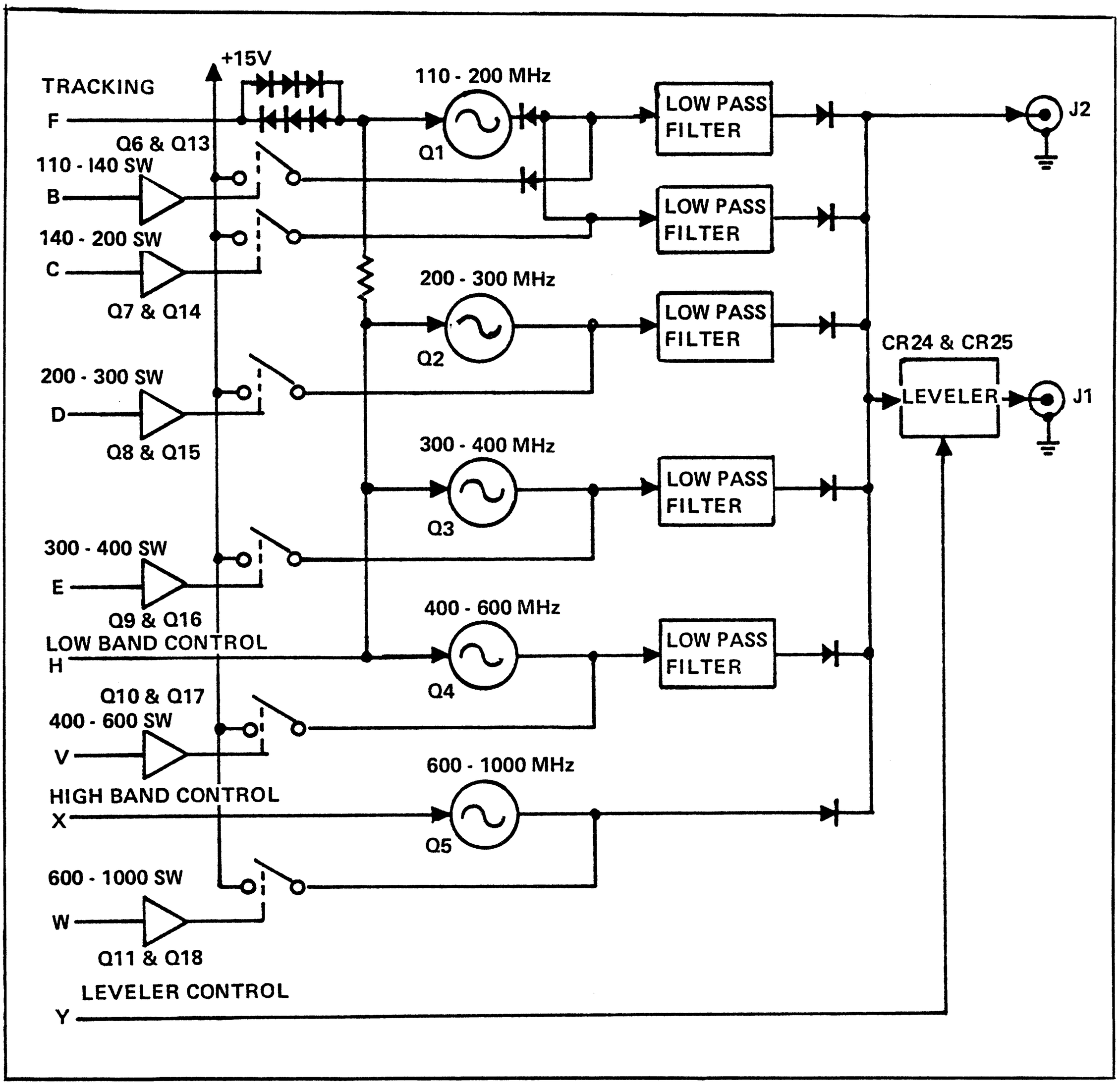

FIGURE 5-15 SOURCE 5 (A4A13) SIMPLIFIED BLOCK DIAGRAM

5.7.12 Phase Detector PCB (A4A12) Test and Alignment Procedure

1. Connect an Oscilloscope to test point A4A12TP4, with the Oscilloscope ac coupled and set at 5V/cm. Then remove Source 4 PCB A4A11 from the Synthesizer and adjust potentiometer A4A12R21 (LOW LEVEL RAMP) for a 20V peak-to-peak ramp.

2. Reinstall the Source 4 PCB A4A11 into the Synthesizer. Connect the Oscilloscope to test point A4A12TP3, with the Oscilloscope dc coupled and set at 1V/cm. Program the FREQUENCY-MHz switch for 850.0000, and note the dc reference voltage on the Oscilloscope.

3. Program the FREQUENCY-MHz switch for 750.0000. Remove the Source 4 PCB A4A11 from the Synthesizer, and adjust potentiometer A4A12R38 (HIGH LEVEL RAMP) for a ramp amplitude that is 0.5V less than the voltage noted in step 2. Re-install the Source 4 PCB A4A11 into the Synthesizer.

PHASE DETECTOR PCB (A4A12) TEST DATA SHEET

1. A4A12R21 adjusted for a 20V p-p ramp. _____(✓)
2. Reference voltage at A4A12TP3. _____
3. A4A12R38 adjusted for a ramp amplitude of 0.5V less than step 2. _____(✓)

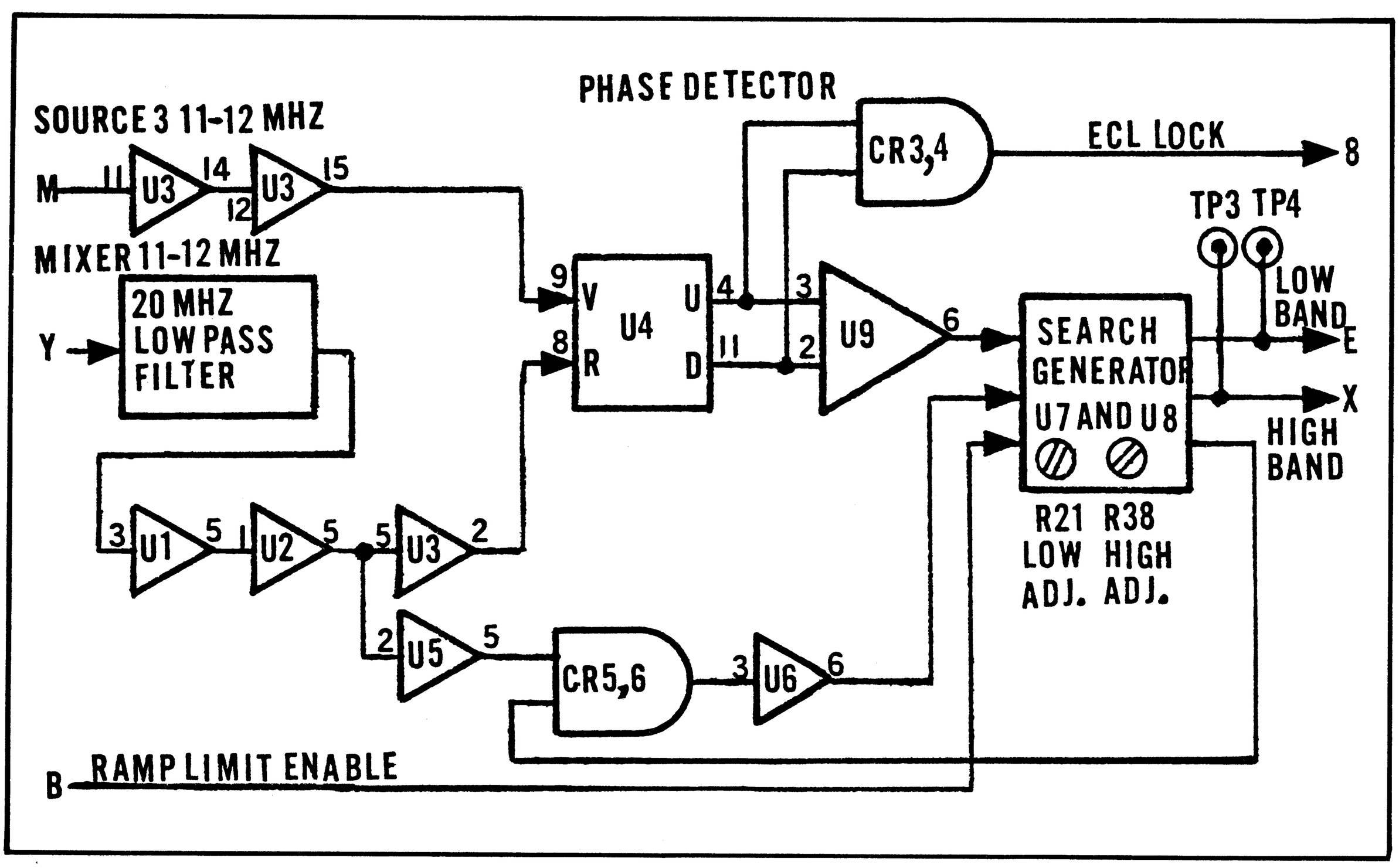

FIGURE 5-16 PHASE DETECTOR (A4A12) SIMPLIFIED BLOCK DIAGRAM

5.7.13 Amplifier PCB (A4A14) Test and Alignment Procedure

1. Connect an Oscilloscope with a 50Ω termination to the SMA Synthesizer connector A4J21 (RF OUTPUT). Program the FREQUENCY-MHz switch to 110.0000. Rotate the front panel OUTPUT LEVEL control to its minimum setting. Adjust potentiometer A4A14R50 to a setting that is one turn beyond the point that the LEVEL indicator just extinguishes.

2. Program the FREQUENCY-MHz switch to 010.0000. Set the OUTPUT LEVEL control to its 1.0V setting. Note and record the peak-to-peak voltage level displayed on the Oscilloscope on the Test Data Sheet.

3. Program the FREQUENCY-MHz switch to 009.0000. Adjust potentiometer A4A14R48 for the same level as noted and recorded in step 2.

4. Program the FREQUENCY-MHz switch to 010.0000. Set the OUTPUT LEVEL control to its .1V setting. Note and record the peak-to-peak voltage level displayed on the Oscilloscope on the Test Data Sheet.

5. Program the FREQUENCY-MHz switch to 009.9000 MHz. Adjust potentiometer A4A14R49 for the same level as noted and recorded in step 4.

6. Select the INT MOD SOURCE, AM MODULATION MODE and set the INTERNAL control to its mid position to achieve a 50% AM 3-1/2 digit display indication. Position the OUTPUT LEVEL control to its .5V setting. Verify that the output at A4J21 is a 50% AM low distortion RF signal.

7. Program the FREQUENCY-MHz switch to 010.0000. Verify that the output at A4J21 is a 50% AM low distortion RF signal.

8. Program the FREQUENCY-MHz switch to 110.0000. Verify that the output at A4J21 is a 50% AM low distortion RF signal.

9. Program the FREQUENCY-MHz switch to 410.0000. Rotate the OUTPUT LEVEL and the INTERNAL controls fully CW. Verify that the LEVEL LED indicator flashes.

10. Select the CW MODULATION MODE and set the OUTPUT LEVEL control to its 1.0V position. Connect a Spectrum Analyzer to the SMA Synthesizer connector A4J21 (RF OUTPUT). For each frequency listed on the Test Data Sheet measure the output level and harmonic content, to verify that the output level is +13 dBm ±5 dB and that the harmonics are -25 dBc.

NOTES

1. *Ensure that the Spectrum Analyzer's front-end is not overloaded, thus causing self generation of harmonics.*
2. *The Synthesizers top cover must be installed with several screws in the area of the Amplifier PCB A4A14 when performing step 10.*
3. *The Amplifier PCB A4A14 may oscillate when the top cover of the Synthesizer is removed when performing steps 1 through 5 due to inadequate shielding. By placing one's*

NOTE (Cont'd)

hand across to top of the Synthesizer so that it makes contact with the gold fingers at the top edge of the A4A14 PCB Assembly will inhibit any oscillation.

AMPLIFIER PCB (A4A14) TEST DATA SHEET

1. A4A14R50 adjusted to extinguish LEVEL LED indicator at 110 MHz OV. _____(✓)
2. p-p Voltage A4J21 _____
3. A4A14R48 adjusted at 9.9 MHz, 0.1V _____(✓)
4. p-p voltage at A4J21 _____
5. A4A14R49 adjusted at 9.9 MHz, 1.0V _____(✓)
6. 50% AM normal at 9.9 MHz _____(✓)
7. 50% AM normal at 10 MHz _____(✓)
8. 50% AM normal at 110 MHz _____(✓)

10.

FREQUENCY (MHz)	OUTPUT LEVEL (+13 dBm ±5 dB)	HARMONICS (-25 dBc)
009.9000		
011.0000		
109.0000		
110.0000		
210.0000		
310.0000		
410.0000		
510.0000		
710.0000		
990.0000		

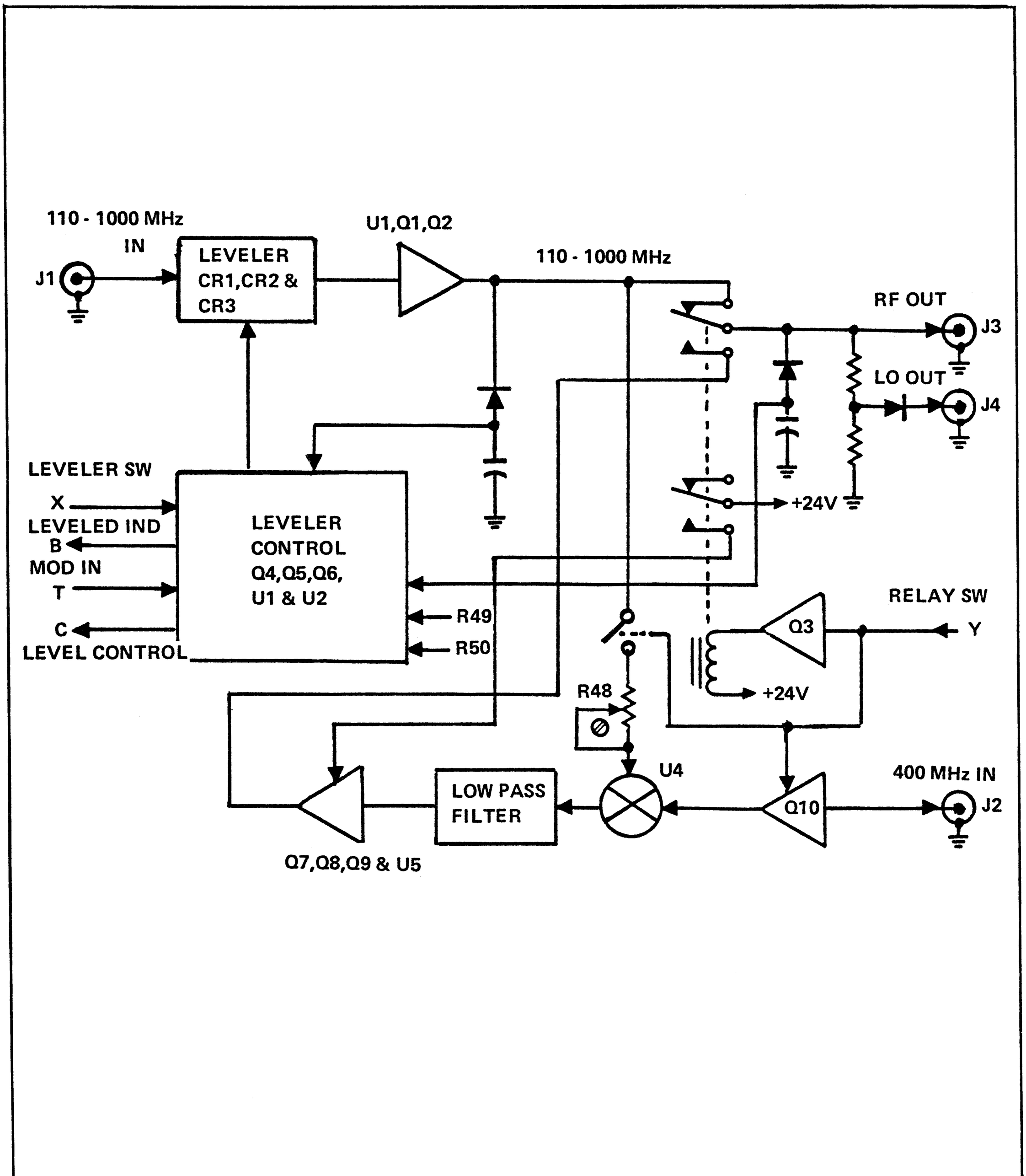

FIGURE 5-17 AMPLIFIER (A4A14) SIMPLIFIED BLOCK DIAGRAM

5.8 INTEGRATED CIRCUITS COMPONENT DATA

The following integrated circuit data sheets are provided to give the service technician pinning information, schematic equivalents and detailed characteristics that are unique to the IC device. Table 5-2 lists the IC's in alphanumeric manufacturer's part number order.

TABLE 5-2 INTEGRATED CIRCUIT DATA SHEETS

COMPONENT NUMBER	TITLE	S-D PART NUMBER	PAGE
ATF-417	1 GHz RF Amplifier	103012	5-38
MC1590G	Wideband Amplifier	025788	5-39
MC1662L	ECL Quad 2-Input NOR Gate	025778	5-40
MC1812P	DTL Quad 2-Input Exclusive OR Gate	025736	5-41
MC3002P	TTL Quad 2-Input OR Gate	025739	5-42
MC3021	TTL Quad Exclusive OR Gate	025789	5-42
MC3446P	TTL IEEE STD-488 Trans-Receiver	117021	5-43
MC4016	Programmable Modulo-N Counter	045237	5-44
MC4018	Programmable Modulo-N Counter	103167	5-44
MC4024	Dual Voltage-Controlled Multivibrator	045206	5-45
MC4044	Phase-Frequency Detector	045238	5-46
MC12040	ECL Phase-Frequency Detector	045277	5-47
SAM-1	600 MHz Mixer	102911	5-48
SAM-2	1 GHz Mixer	102815	5-49
SN72311	Differential Comparator with Strobe	103943	5-50
11C90	ECL Divide-By-10/11 Counter	103416	5-51

1 GHz RF AMPLIFIER

ATF-417 **S-D P/N 103012**

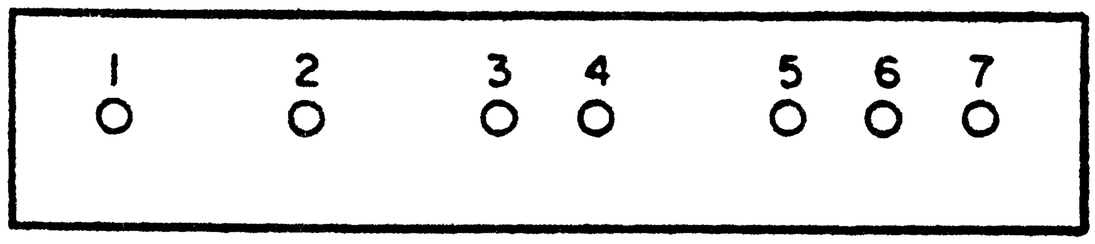

PIN NO. 1 - INPUT
PINS NO. 2,3,5,6 - GROUND
PIN NO. 4 - +24 V
PIN NO. 7 - OUTPUT

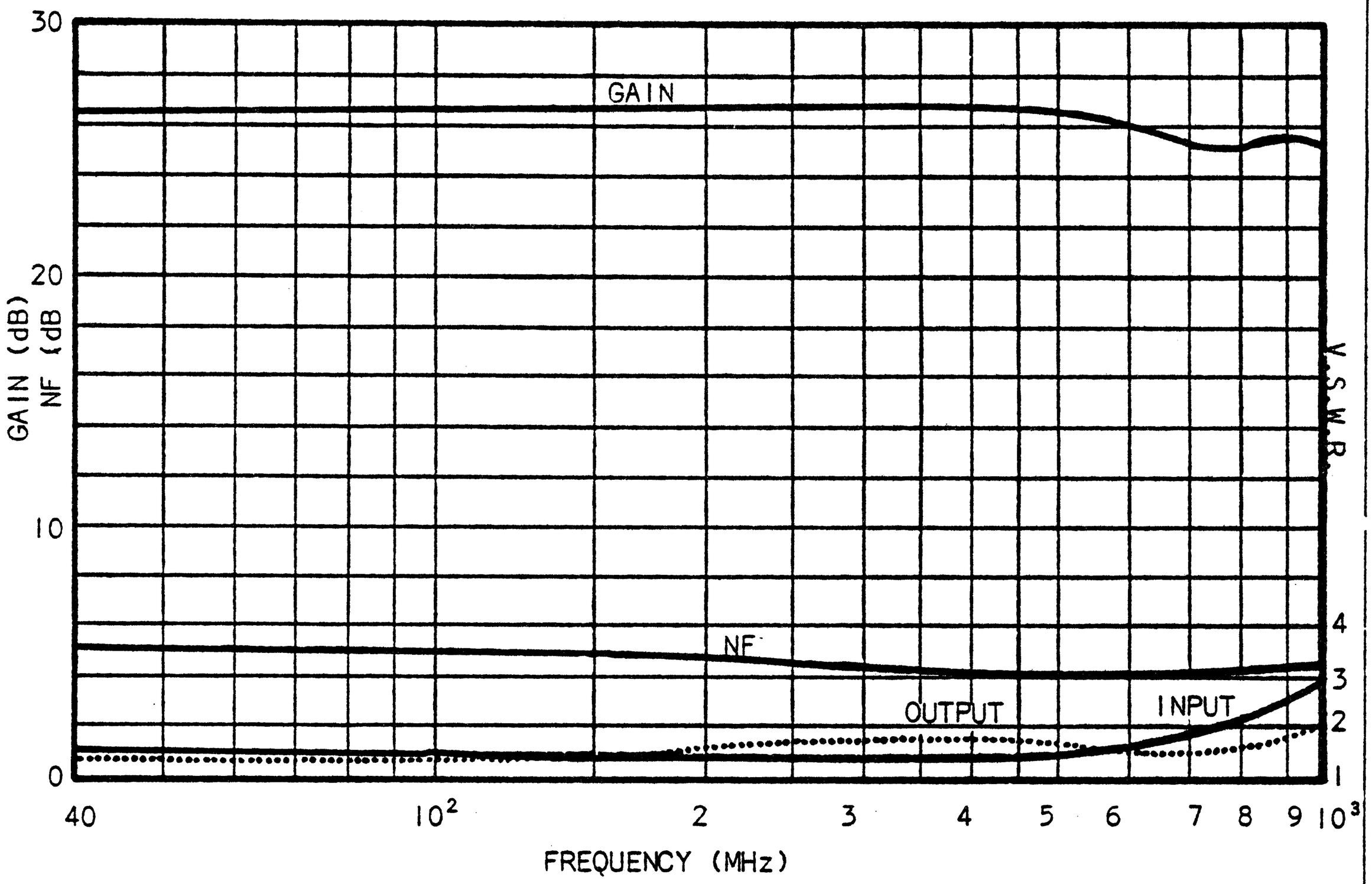

MC1590G S-D P/N 025788

RF/IF/AUDIO AMPLIFIER

an integrated circuit featuring wide-range AGC for use in RF/IF amplifiers and audio amplifiers over the temperature range, -55 to +125°C. See Motorola Application Note AN-513 for design details.

METAL PACKAGE
CASE 601

PIN CONNECTION

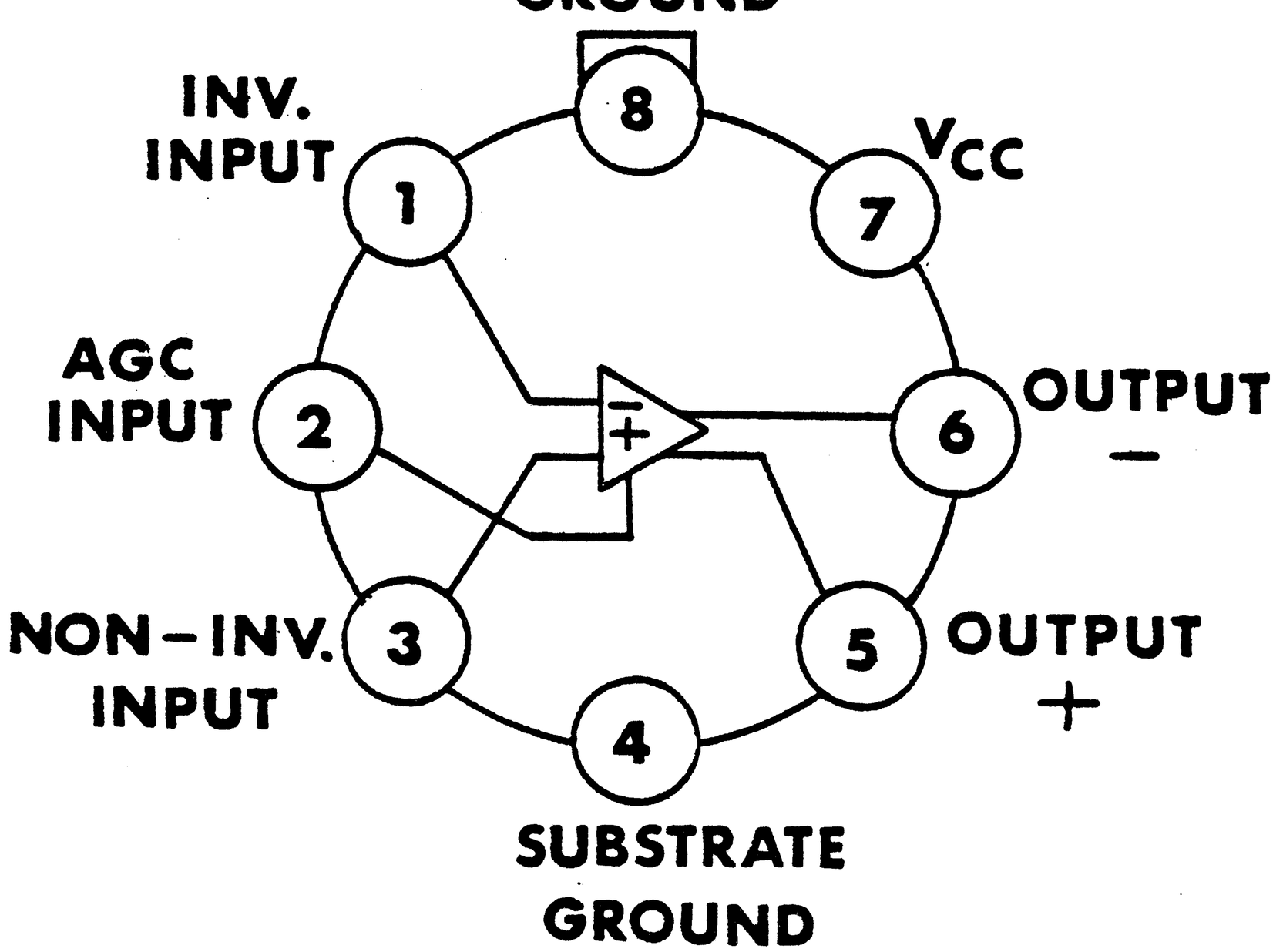

ECL QUAD 2-INPUT NOR GATE

MC1662L

S-D P/N 025778

POSITIVE LOGIC

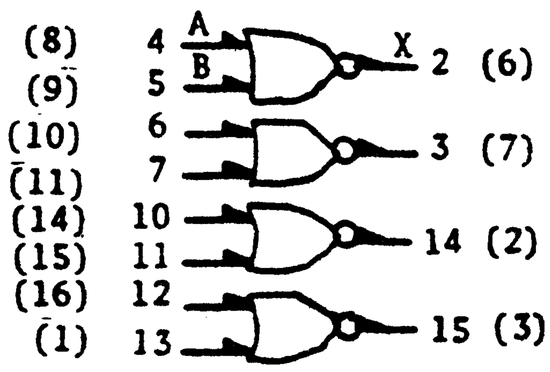

$X = \overline{A + B}$

NEGATIVE LOGIC

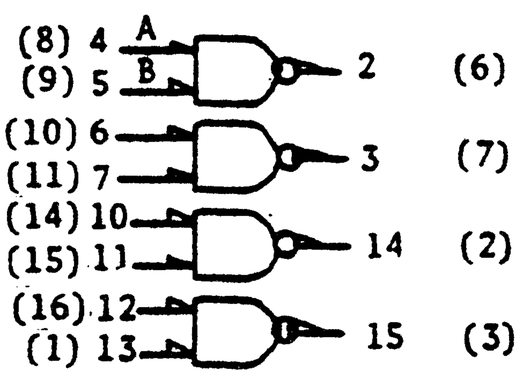

$X = \overline{A \cdot B}$

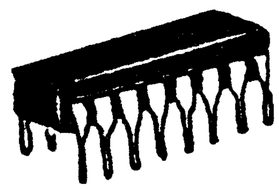

L Suffix
Ceramic Package
Case 620

Number at end of terminals denotes pin number of L package (Case 620).
Number in parenthesis denotes pin number for F package (Case 650).

Four 2-input NOR or NAND gating functions in a single package. An internal bias reference voltage insures that the threshold point remains in the center of the transition region over the temperature range (-30 to +85°C).

Input pulldown resistors eliminate the need to tie unused inputs to V_{EE}

CIRCUIT SCHEMATIC

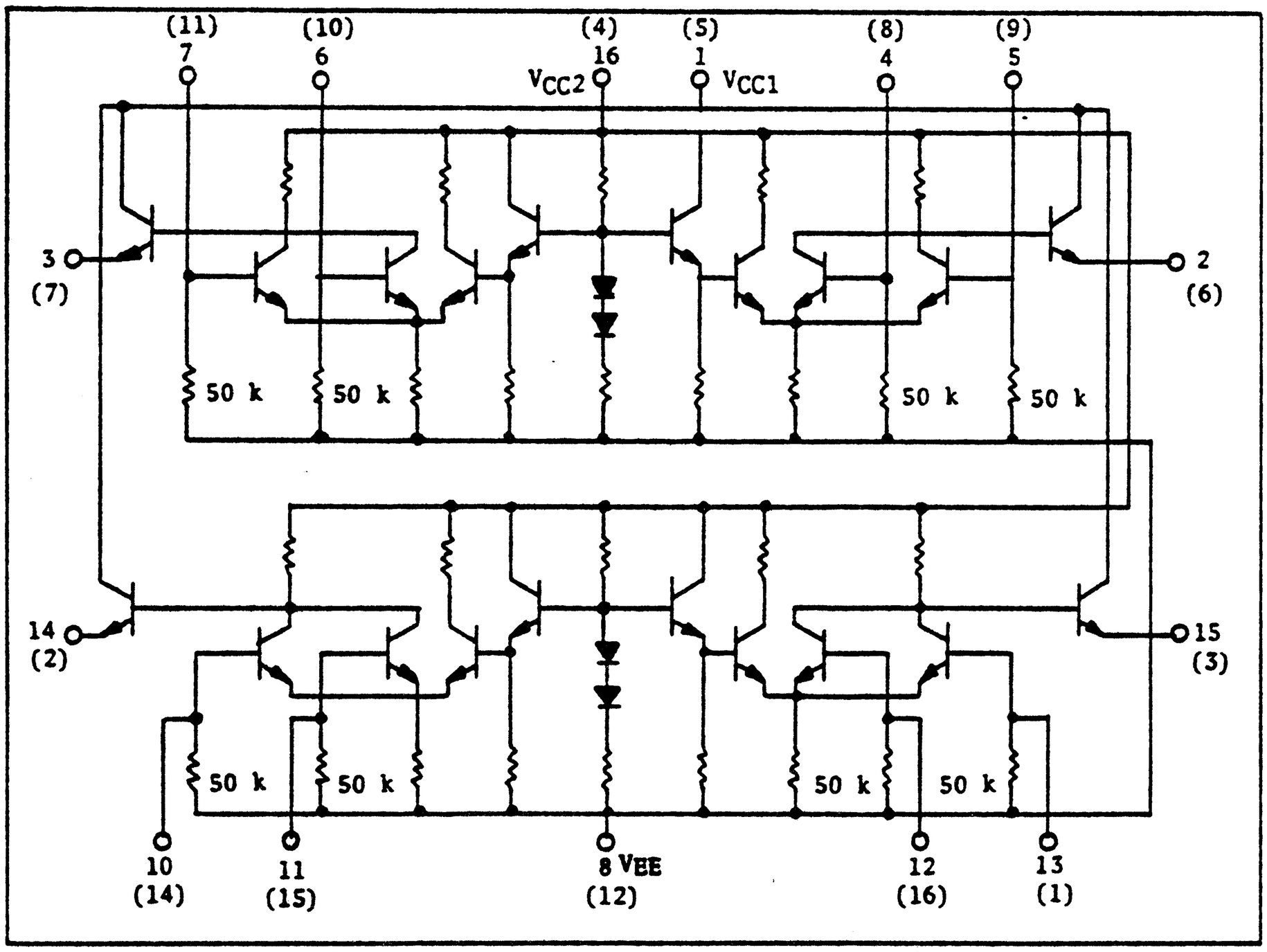

1702-11-81

MC1812P
MC1912F

S-D P/N 025736

QUAD 2-INPUT EXCLUSIVE "OR" GATE

MC1912F • MC1812F,P

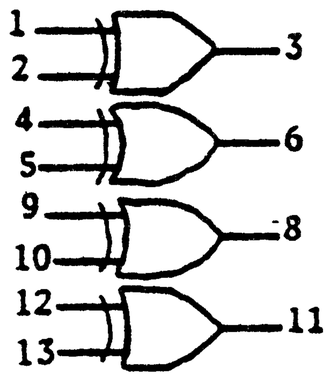

Positive Logic: $3 = 1 \cdot \overline{2} + \overline{1} \cdot 2$

This device consists of four 2-input gates, each performing the logical EXCLUSIVE OR function. Added logic flexibility provided by this device helps to optimize system designs.

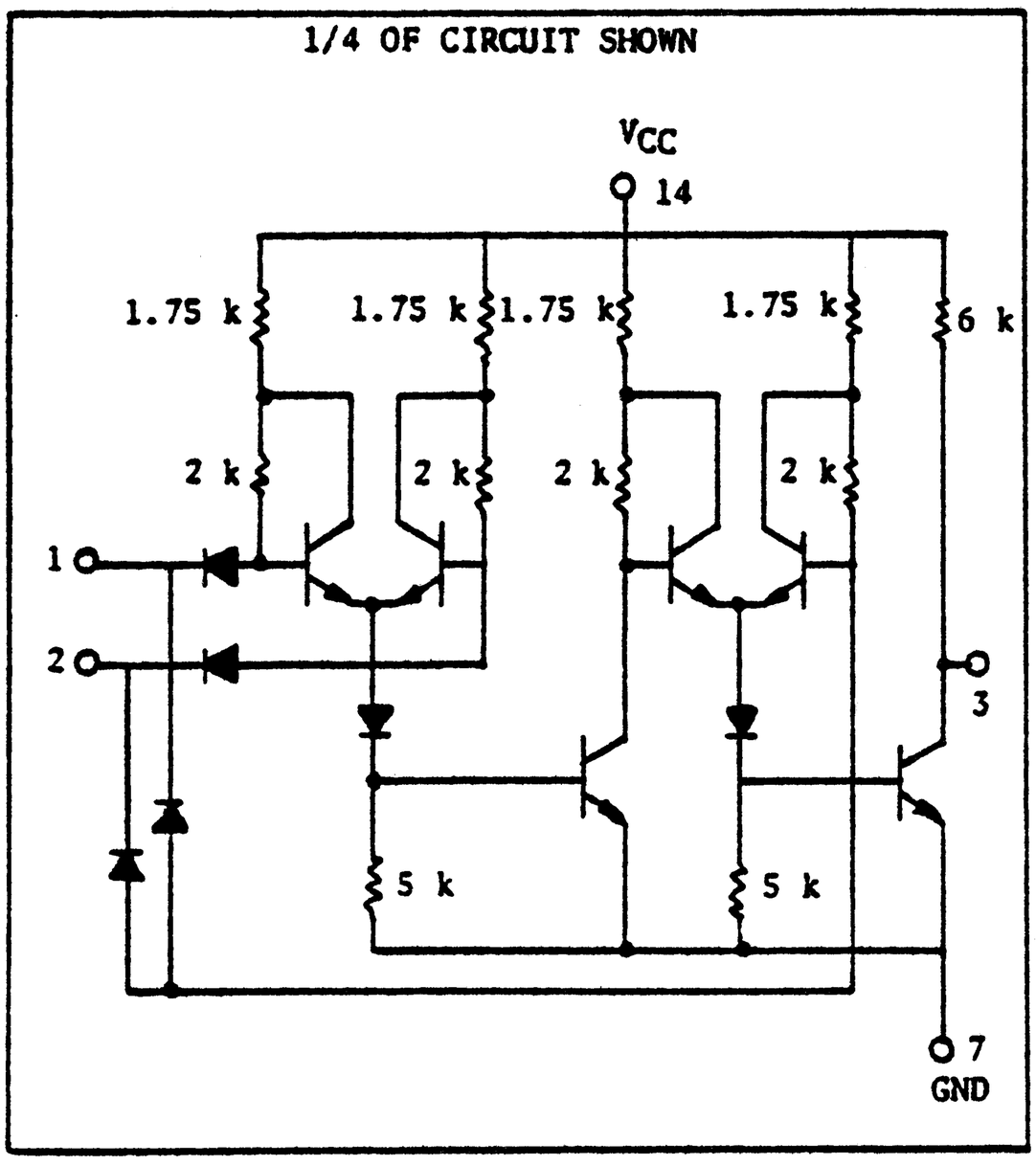

LOGIC DIAGRAM
1/4 OF DEVICE SHOWN

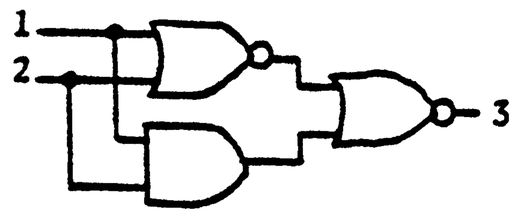

TTL QUAD 2-INPUT OR GATE

MC3002P

S-D P/N 025739

P SUFFIX
PLASTIC PACKAGE
CASE 646

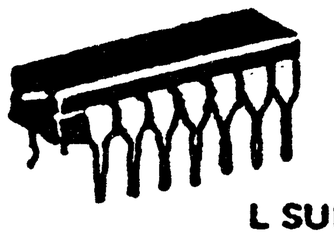

L SUFFIX
CERAMIC PACKAGE
CASE 632

F SUFFIX
CERAMIC PACKAGE
CASE 607

Quad 2-Input NOR Gate

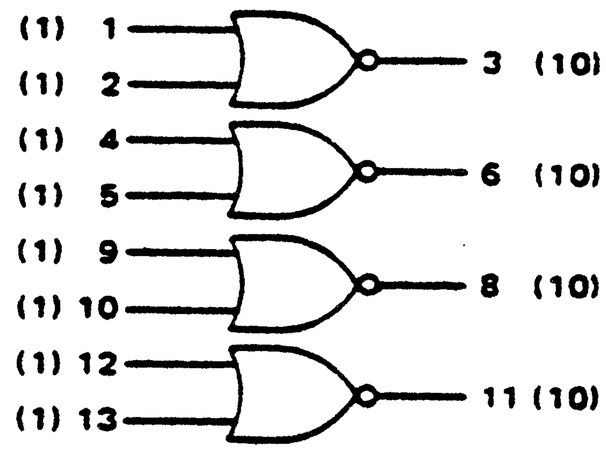

$3 = \overline{1+2}$

t_{pd} = 6.0 ns typ
P_D = 122 mW typ/pkg

TTL QUAD EXCLUSIVE OR GATE

MC3021

S-D P/N 025789

Quad 2-Input
Exclusive OR Gate

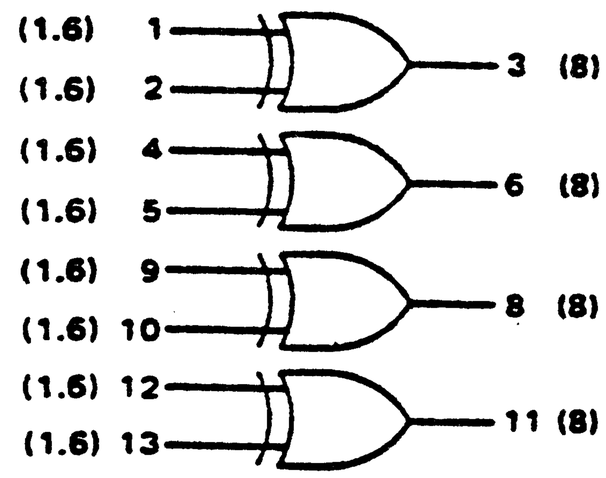

$3 = 1 \cdot \bar{2} + \bar{1} \cdot 2$

t_{pd} = 14 ns typ
P_D = 100 mW typ/pkg

TTL IEEE STD-488 TRANSRECEIVER

MC3446P

S-D P/N 117021

QUAD GENERAL PURPOSE INTERFACE BUS (GPIB) TRANSCEIVER

The MC3446 is a quad bus transceiver intended for usage in instruments and programmable calculators equipped for interconnection into complete measurement systems. This transceiver allows the bidirectional flow of digital data and commands between the various instruments. The transceiver provides four open-collector drivers and four receivers featuring hysteresis:

- Tailored to meet the IEEE STD-488 1975 (Digital Interface for Programmable Instrumentation) and the proposed IEC Standard on Instrument Interface
- MOS Compatible with High Impedance Inputs
- Low Power - Average Power Supply Current = 12 mA
- Termination Resistors Provided

P SUFFIX
PLASTIC PACKAGE
Case 648

TYPICAL MEASUREMENT SYSTEM APPLICATION

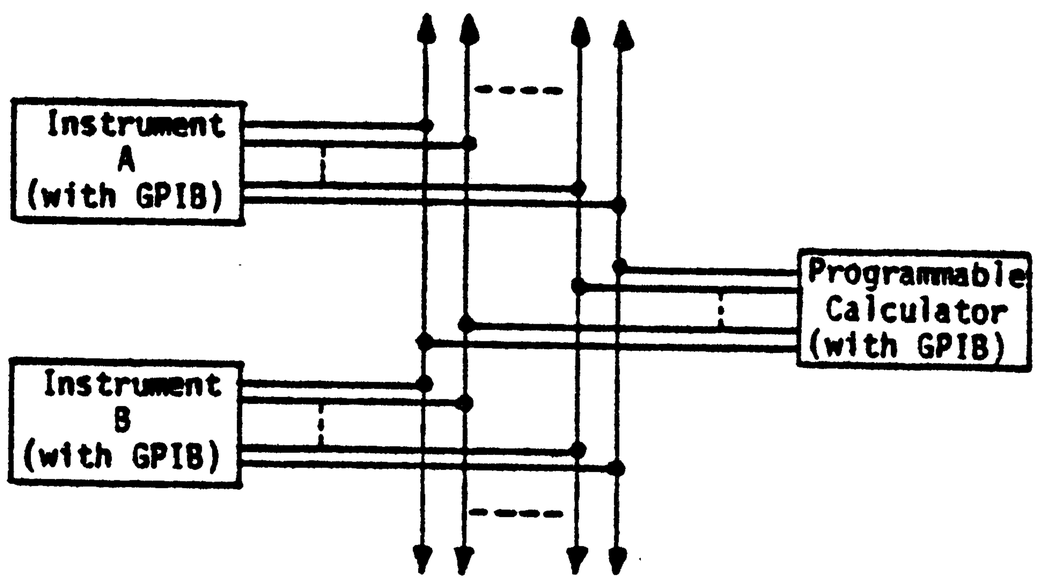

PIN CONNECTIONS

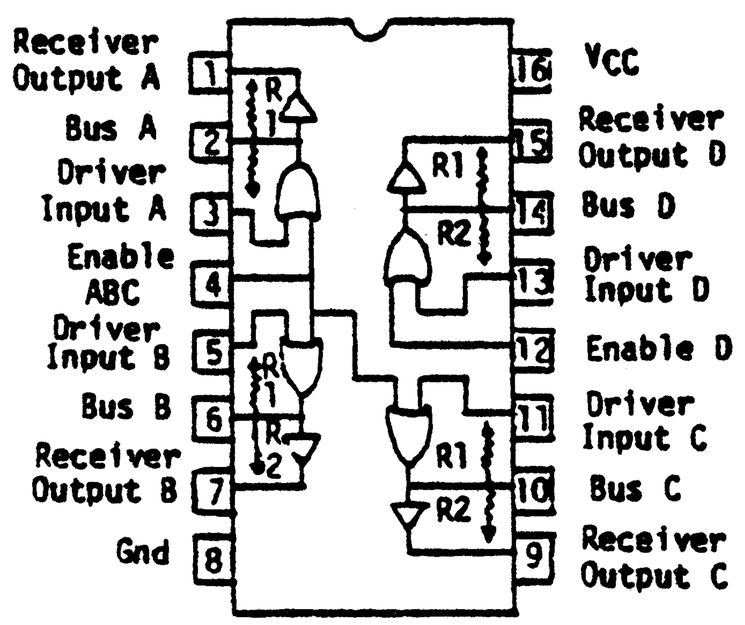

R1 = 2.4 k

R2 = 5.0 k

MC4016
MC4018

S-D P/N 045237
S-D P/N 103167

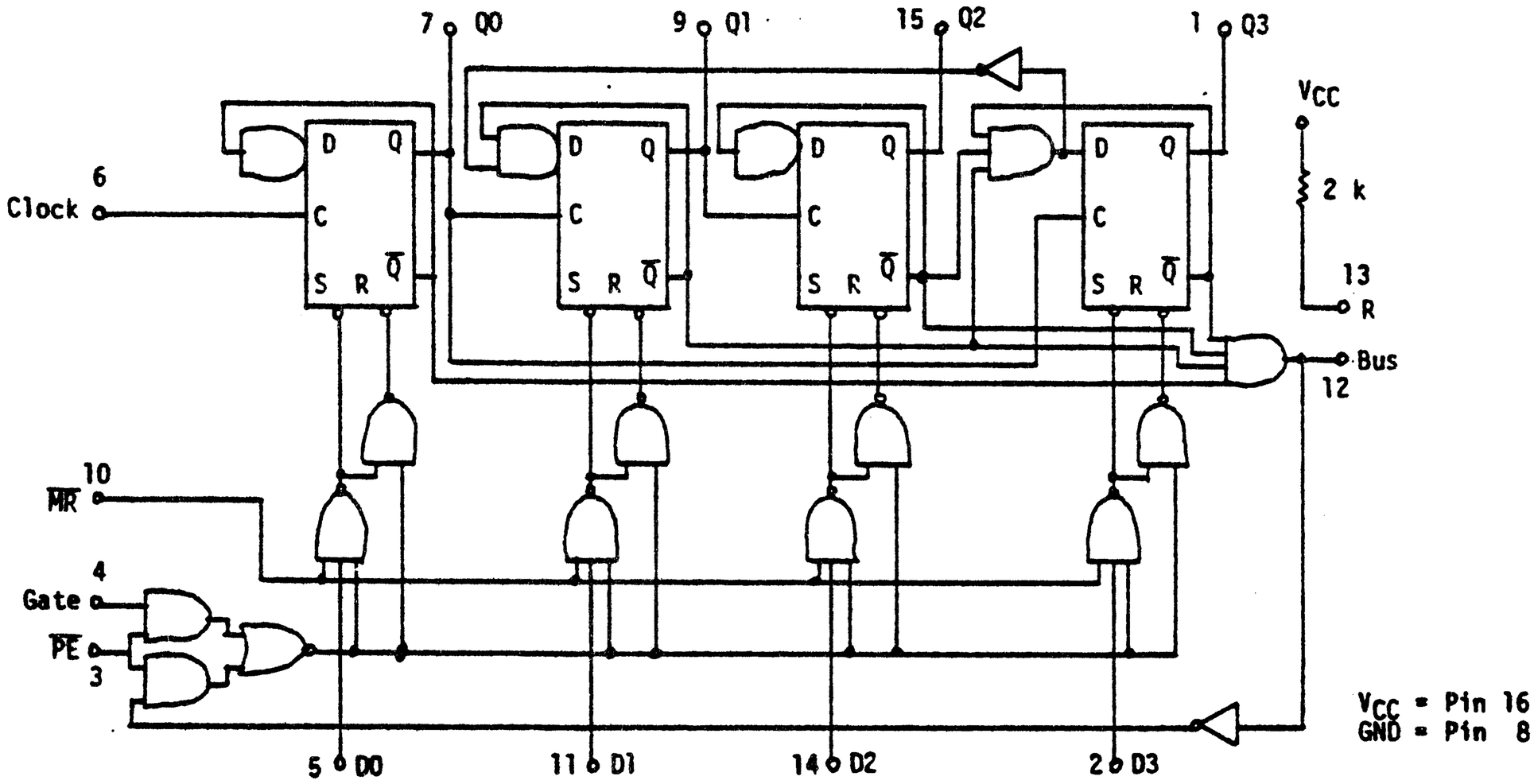

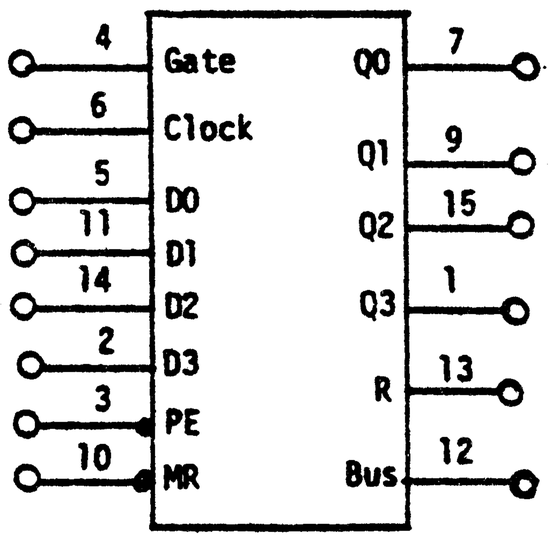

Vcc = Pin 16
Gnd = Pin 8

MC4018

COUNT	OUTPUT			
	Q3	Q2	Q1	Q0
15	1	1	1	1
14	1	1	1	0
13	1	1	0	1
12	1	1	0	0
11	1	0	1	1
10	1	0	1	0
9	1	0	0	1
8	1	0	0	0
7	0	1	1	1
6	0	1	1	0
5	0	1	0	1
4	0	1	0	0
3	0	0	1	1
2	0	0	1	0
1	0	0	0	1
0	0	0	0	0

MC4016

COUNT	OUTPUT			
	Q3	Q2	Q1	Q0
9	1	0	0	1
8	1	0	0	0
7	0	1	1	1
6	0	1	1	0
5	0	1	0	1
4	0	1	0	0
3	0	0	1	1
2	0	0	1	0
1	0	0	0	1
0	0	0	0	0

MC4024

SD-P/N 045206

MC4324 • MC4024

The MC4324/4024 consists of two independent voltage-controlled multivibrators with output buffers. Variation of the output frequency over a 3.5-to-1 range is guaranteed with an input dc control voltage of 1.0 to 5.0 voltage.

Operating frequency is specified at 25 MHz at 25°C. Operation to 15 MHz is possible over the specified temperature range. For higher frequency requirements, see the MC1648 (200 MHz) or the MC1658 (125 MHz) data sheet.

This device was designed specifically for use in phase-locked loops for digital frequency control. It can also be used in other applications requiring a voltage-controlled frequency, or as a stable fixed frequency oscillator (3.0 MHz to 15 MHz) by replacing the external control capacitor with a crystal.

- Maximum Operating Frequency = 25 MHz Guaranteed @ 25°C
- Power Dissipation = 150 mW typ/pkg
- Output Loading Factor = 7

F SUFFIX
CERAMIC PACKAGE
CASE 607
(TO-86)

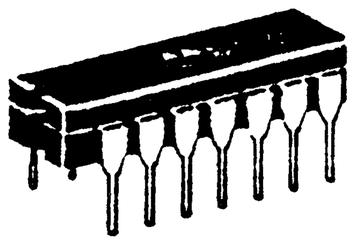

L SUFFIX
CERAMIC PACKAGE
CASE 632
(TO-116)

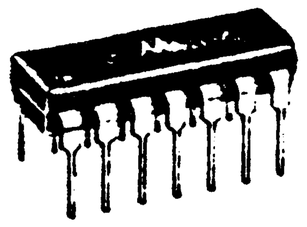

P SUFFIX
PLASTIC PACKAGE
CASE 646
(TO-116)
(MC4024 only)

1/2 OF CIRCUIT SHOWN

(Numbers in brackets are pin numbers for other half.)

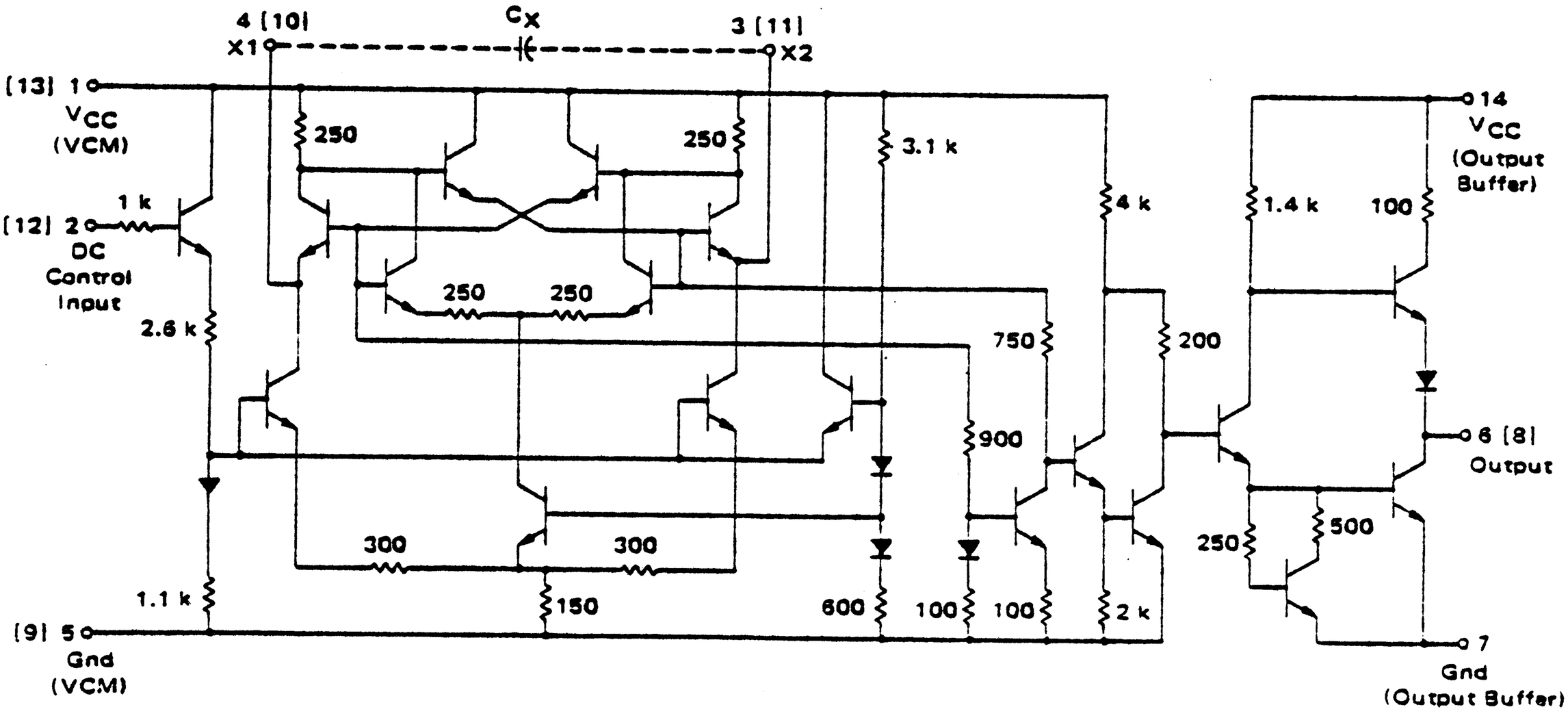

PHASE-FREQUENCY DETECTOR

MC4044

S-D P/N 045238

This device contains two digital phase detectors and a charge pump circuit which converts MTTL inputs to a dc voltage level for use in frequency discrimination and phase-locked-loop applications.

The two phase detectors have common inputs. Phase frequency detector 1 is locked in (indicated by both outputs high) when the negative transitions of the variable input (VI) and reference input (RI) are equal in frequency and phase. If the variable input is lower in frequency or lags in phase, the U1 (up) output goes low; conversely the D1 (down) output goes low when the variable input is higher in frequency or leads the reference input in phase. It is important to note that the duty cycles of the variable input and the reference input are not important since negative transitions control system operation.

Phase detector 2, on the other hand, is locked in when the variable input phase lags the reference phase by 90° (indicated by the U2 and D2 outputs alternately going low with equal pulse widths). If the variable input phase lags by more than 90°, U2 will remain low longer than D2, and, conversely, if the variable input phase lags the reference phase by less than 90°, D2 remains low longer. In this phase detector the variable input and the reference must have 50% duty cycles.

The charge pump accepts the phase detector outputs (U1 or U2 applied to PU, and D1 or D2 applied to PD) and converts them to fixed amplitude positive and negative pulses at the UF and DF outputs respectively. These pulses are applied to a lag-lead active filter, which incorporates external components, as well as the amplifier provided in the MC4044 circuit. The filter provides a dc voltage proportional to the phase error.

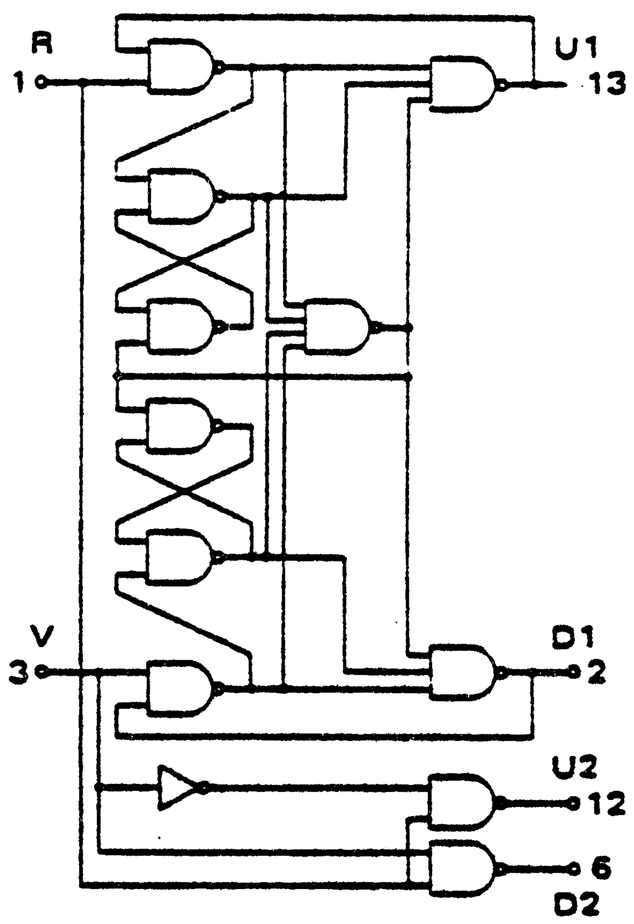

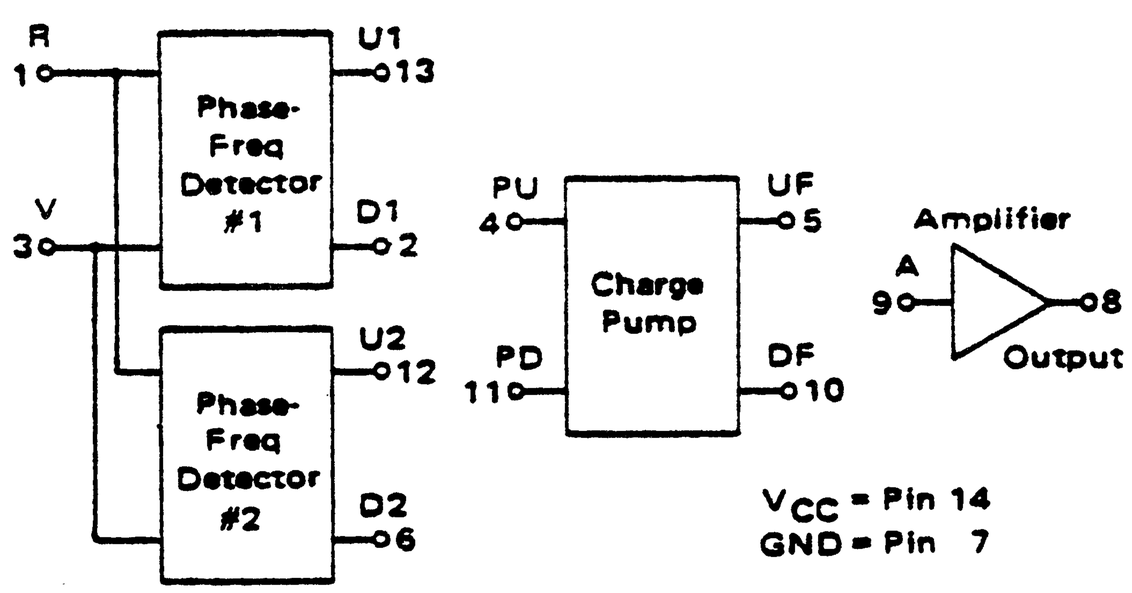

Input Loading Factor: R, V = 3

Output Loading Factor (Pin 8) = 10

Total Power Dissipation = 85 mW typ/pkg

Propagation Delay Time = 9.0 ns typ
(thru phase detector)

CHARGE PUMP

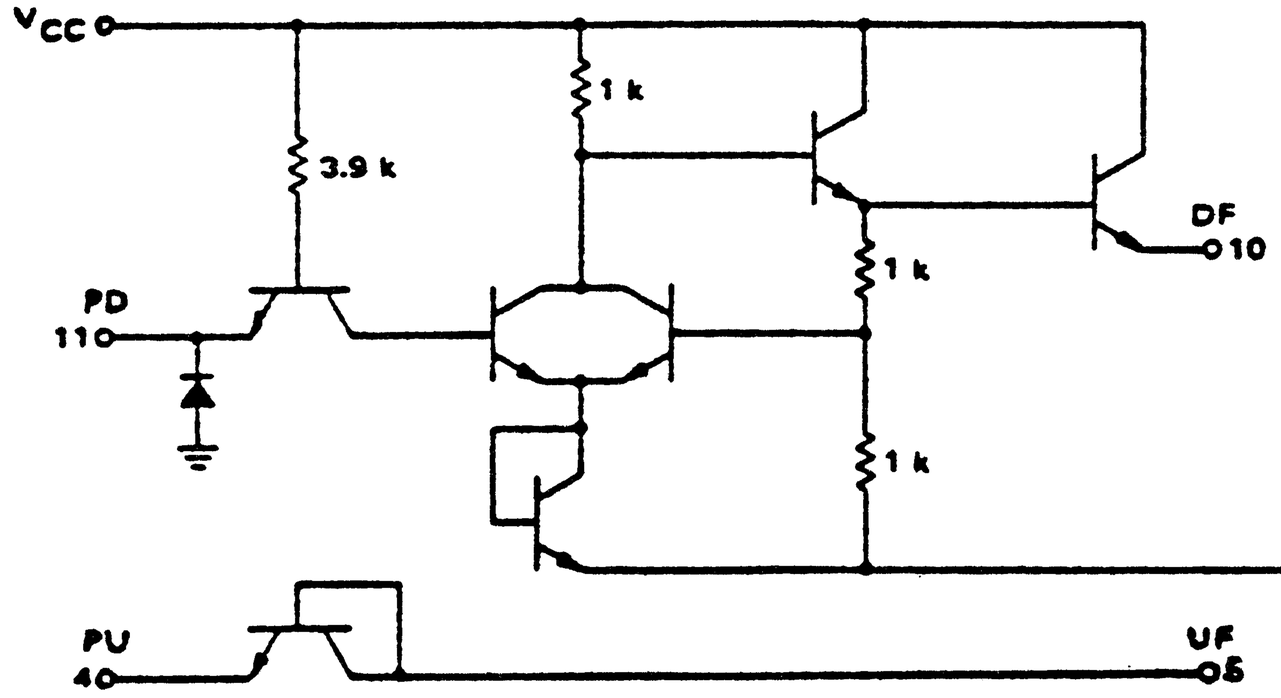

AMPLIFIER

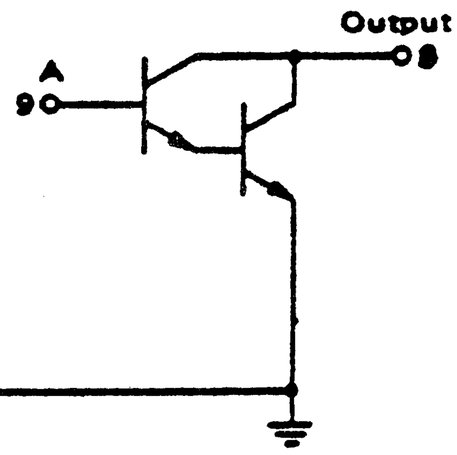

ECL PHASE-FREQUENCY DETECTOR

MC12040

S-D P/N 045277

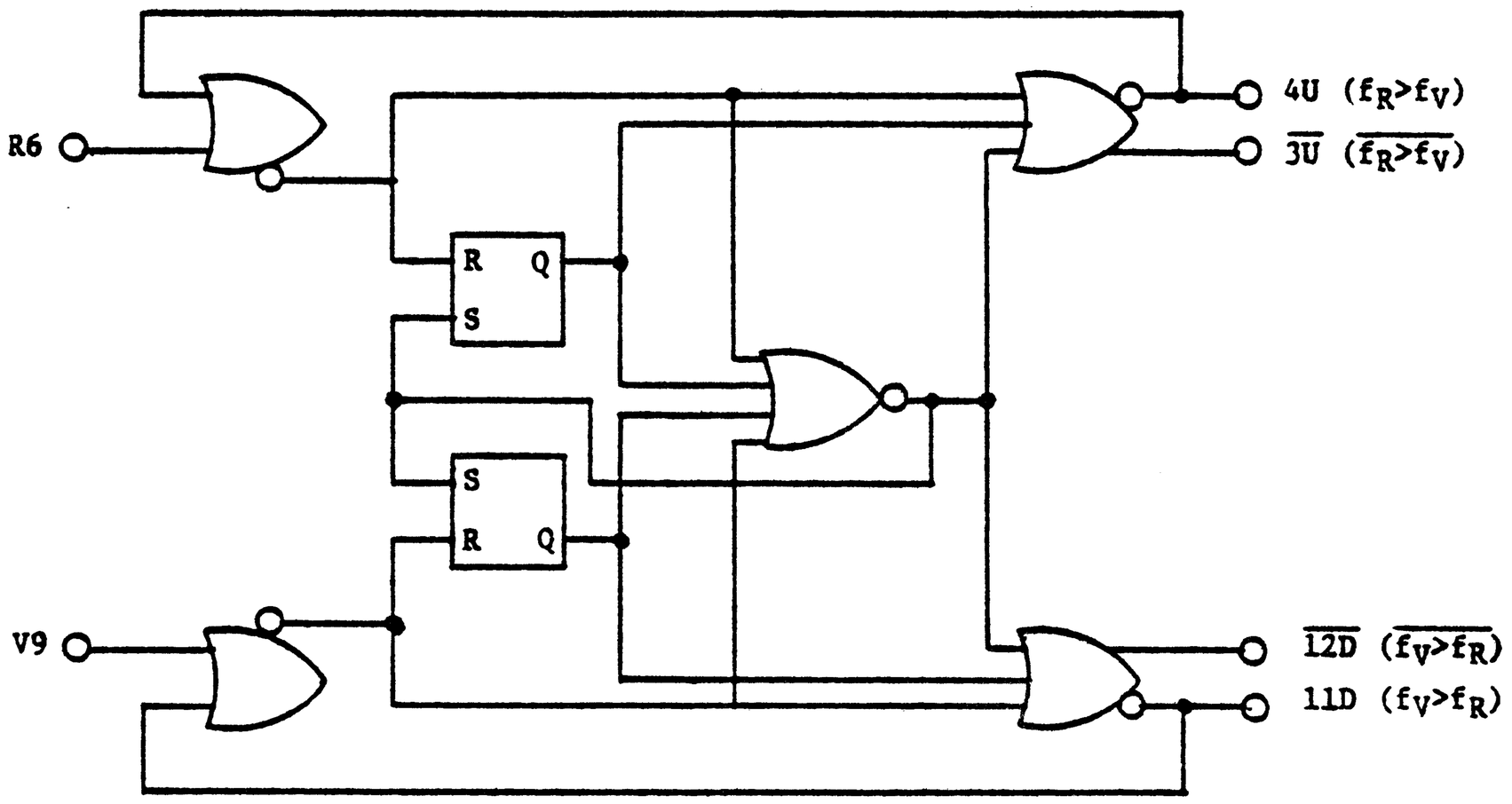

V_{CC1} = Pin 1

V_{CC2} = Pin 14

V_{CC3} = Pin 7

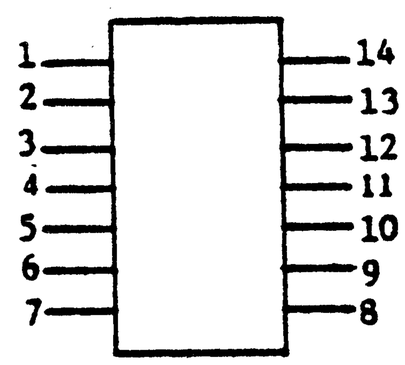

NC - No connection

The MC12040 is a logic network designed for use as a phase comparator for MECL-compatible input signals. It determines the "lead" or "lag" phase relationship and the time difference between the leading edges of the waveforms. Since these edges occur only once per cycle, the detector has a range of $\pm 2\pi$ radians.

Operation of the device may be illustrated by assuming two waveforms, R and V (Figure 1), of the same frequency but differing in phase. If the logic had established by past history that R wave leading V, the U output of the detector (pin 4) would produce a positive pulse width equal to the phase difference and the D output (pin 11) would simply remain low.

On the other hand, it is also possible that V was leading R (Figure 1), giving rise to a positive pulse on the D output and a constant low level on the U output pin. Both outputs for the sample condition are valid since the determination of lead or lag is dependent on past edge crossing and initial conditions at start-up. A stable phase-locked loop will result from either condition.

Phase error information is contained in the output duty cycle - that is, the ratio of the output pulse width to total period. By integrating or low-pass filtering the outputs of the detector and shifting the level to accommodate ECL swings, usable analog information for the voltage-controlled oscillator can be developed.

TIMING DIAGRAM

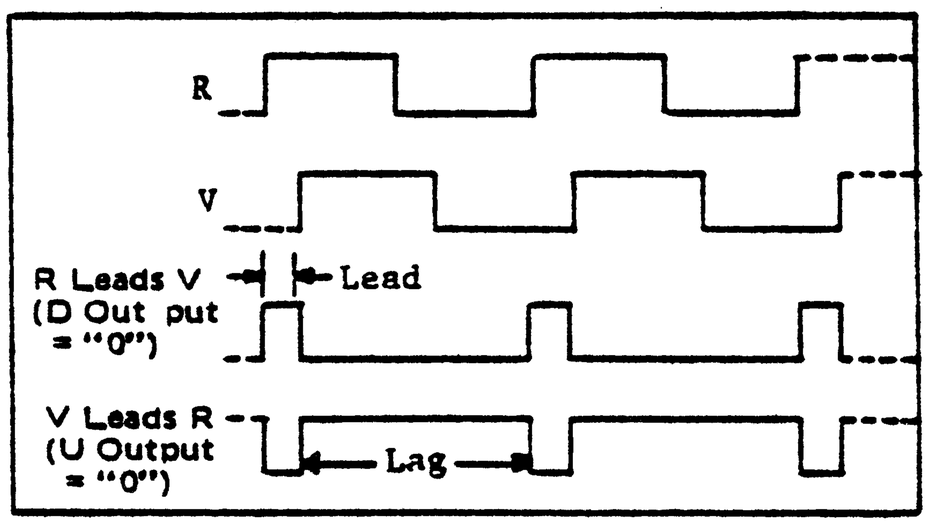

SAM-1

S-D P/N 102911

PIN CONNECTIONS

LO	8
RF	1
IF	3,4
Ground	2,5,6,7
Case Ground	2

NOTE: Pins 3 and 4 must be connected together.

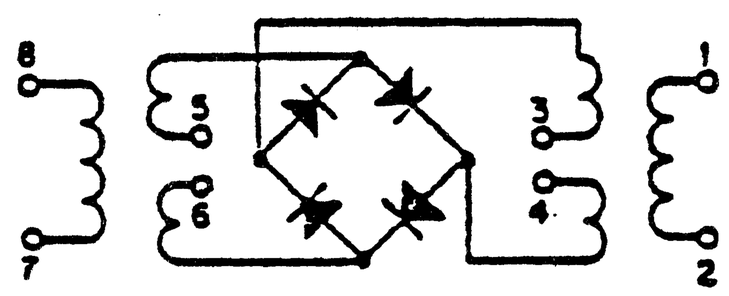

ABSOLUTE MAXIMUM RATINGS

Total Input Power	50 mW
Total Input, Current Peak	40 mA
Operating & Storage Temperature	-55°C to +100°C
Pin Temperature (10 seconds)	510°C

Frequency Range, MHz	LO		1-600
	RF		1-600
	IF		DC-600
Conversion Loss, dB		Typical	Maximum
One Octave from Band Edge		5.5	7.0
Total Range		6.5	8.5
Signal, 1 dB Compression Level		+1 dBm	
Isolation, dB		Typical	Minimum
Lower Band Edge to One Octave Lower	LO-RF	55	45
	LO-IF	50	40
Mid Range	LO-RF	45	30
	LO-IF	40	25
Upper Band Edge to	LO-RF	35	20
	LO-IF	30	20
Impedance, All Ports		50 ohms	
Phase Detection			
DC Offset		1 mV typical	
DC Polarity		Negative	
Electronic Attenuation			
Minimum Attenuation (20 mA)		3.5 dB	

SAM-2 S-D P/N 102815

PIN CONNECTIONS

LO	8
RF	1
IF	3,4
Ground	2,5,6,7
Case Ground	2

NOTE: Pins 3 and 4 must be connected together.

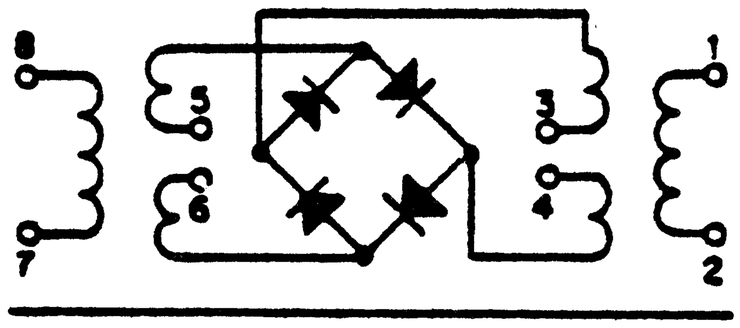

ABSOLUTE MAXIMUM RATINGS

Total Input Power	50 mW
Total Input, Current Peak	40 mA
Operating & Storage Temperature	-55°C to +100°C
Pin Temperature (10 seconds)	510°C

Frequency Range, MHz	LO	1-1000
	RF	1-1000
	IF	DC-1000

Conversion Loss, dB	Typical	Maximum
One Octave from Band Edge	6	7.5
Total Range	7.0	9.5

Signal, 1 dB Compression Level	+1 dBm

Isolation, dB		Typical	Minimum
Lower Band Edge to One	LO-RF	55	45
Decade Higher	LO-IF	50	40
Mid Range	LO-IF	40	25
	LO-IF	40	25
Upper Band Edge to	LO-RF	35	20
One Decade Higher	LO-IF	30	20

Impedance, All Ports	50 ohms
Phase Detection	
DC Offset	1 mV typical
DC Polarity	Negative
Electronic Attenuation Minimum Attenuation (20 mA)	3.5 dB

DIFFERENTIAL COMPARATOR W/STROBE

SN72311L

S-D P/N 103943

DESCRIPTION

The SN52111 and SN72311 are single high-speed voltage comparators. These devices are designed to operate from a wide range of power supply voltage, including ±15-volt supplies for operational amplifiers and 5-volt supplies for logic systesm. The output levels are compatible with most DTL, TTL and MOS circuits. These comparators are capable of driving lamps or relays and switching voltages up to 50 volts at 50 milliamperes. All inputs and outputs can be isolated from system ground. The outputs can drive loads referenced to ground, V_{CC+}, or V_{CC-}. Offset balancing and strobe capability are available and the outputs can be wire-OR connected. If the strobe input is low, the output will be in the off-state regardless of the differential input.

L PLUG-IN PACKAGE
(TOP VIEW)

PIN 4 IS IN ELECTRICAL CONTACT WITH THE CASE

ECL DIVIDE-BY-10/11 COUNTER

11C90 S-D P/N 103416

GENERAL DESCRIPTION - The 11C90 is a high speed prescaler designed specifically for communication and instrumentation applications. It will divide by either 10 or 11 over a frequency range from dc to typically 650 MHz. The division ratio is controlled by the mode control. The divide by 10 or 11 capability allows the use of pulse swallowing techniques to control high speed counting modulos by lower speed circuits. The 11C90 may be used with either ECL or TTL power supplies.

In addition to the ECL outputs $\overline{Q}_4$ and Q_4, the 11C90 contains an ECL-to-TTL converter and a TTL output. The TTL output operates from the same V_{CC} and V_{EE} levels as the counter, but a separate pin is used for the TTL circuit V_{EE}. This minimizes noise coupling when the TTL output switches and also allows power consumption to be reduced by leaving the separate V_{EE} pin open if the TTL output is not used.

To facilitate capacitive coupling of the clock signal, a 400 Ω resistor (V_{REF}) is connected internally to the V_{BB} reference. Connecting this resistor to the Clock Pulse input signal about the switching threshold. Maximum frequency operation is achieved with a 50% duty cycle.

Each of the Mode control inputs is connected to an internal 2 k resistor with the other end uncommitted (RM_1 and RM_2). An M input can be driven from a TTL circuit operating from the same V_{CC} by connecting the free end of the associated 2 k resistor to V_{CCA}. When an M input is driven from an ECL circuit, the 2 k resistor can be left open or, if required, can be connected to V_{EE} to act as a pull-down resistor. The device is packaged in a hermetic 16-pin ceramic Dual In-line package. It is available in commercial and military temperature ranges.

CONNECTION DIAGRAM
DIP (TOP VIEW)

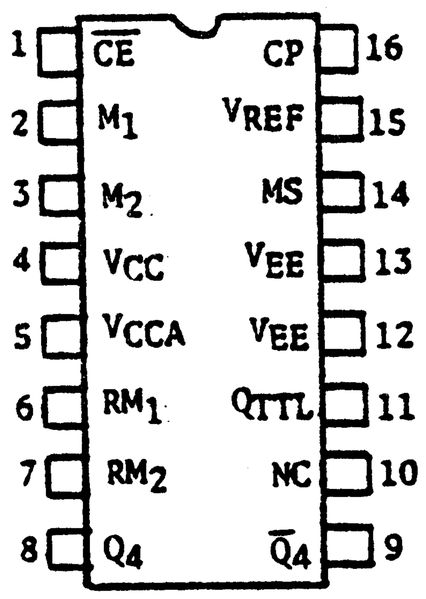

LOGIC SYMBOL

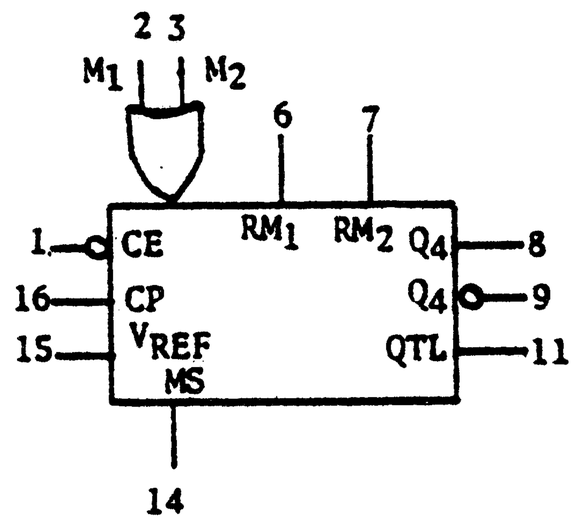

V_{CC} = Pin 4
V_{CCA} = Pin 5
V_{EE} = Pin 12
$V_{EE(TTL)}$ = Pin 13

LOGIC DIAGRAM

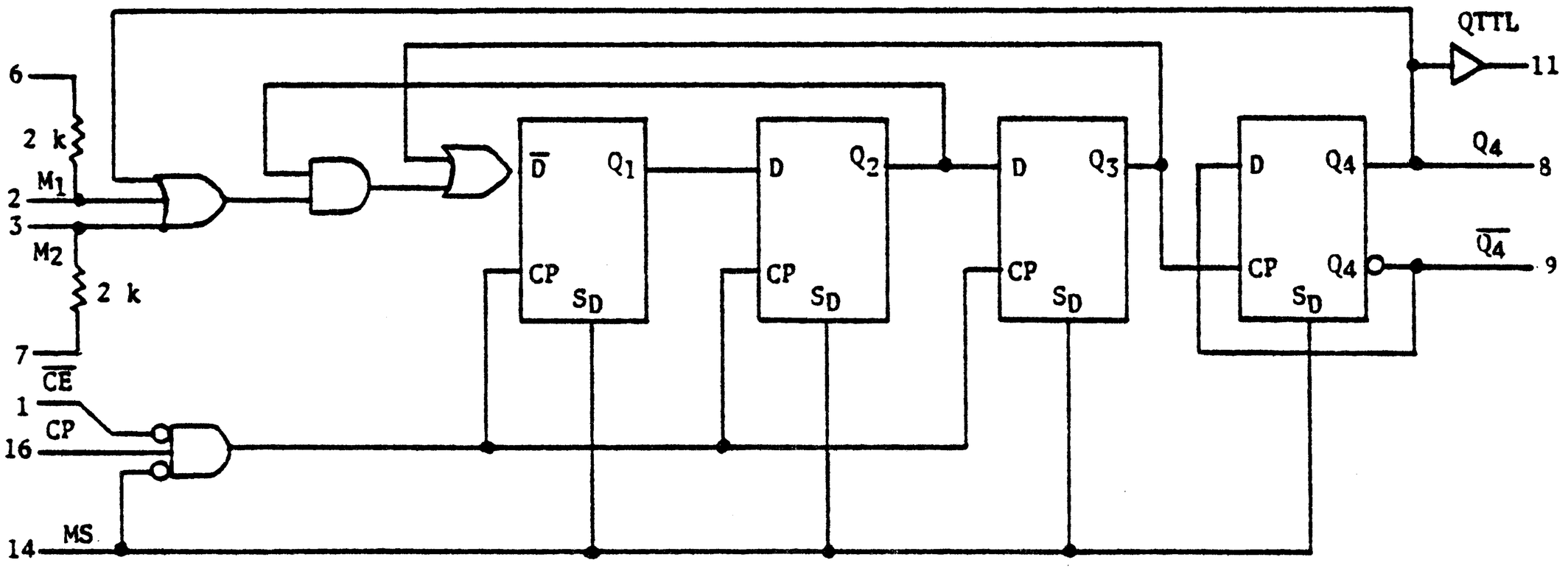

NOTE: This diagram is provided for understanding of logic operation only. It should not be used for evaluation of propagation delays as many internal functions are achieved more efficiently then shown.

11C90 S-D P/N 103416

FUNCTIONAL DESCRIPTION - The 11C90 contains four ECL flip-flops, an ECL to TTL converter and a Schottky TTL output buffer with an active pull-up. Three of the flip-flops operate as a synchronous shift counter driving the fourth flip-flop operating as an asynchronous toggle. The internal feedback logic is such that the TTL output and the Q_4 ECL output are HIGH for six clock periods and LOW for five clock periods. The Mode Control (M) inputs can modify the feedback to make the output HIGH for five clock periods and LOW for five clock periods, as indicated in the Count Sequence Table.

The feedback logic is such that at the instant the output goes HIGH, the circuit is already committed as to whether the output period will be 10 or 11 clock periods long. This means that subsequent changes in an M input signal, including decoding spikes, will have no effect on the current output period. The only timing restriction for an M input signal is that it be in the desired state at least a set-up time before the clock that follows the HHLL state shown in the table. The allowable propagation delay through external logic to an M input is maximized by designing it to use the positive transition of the 11C90 output as its active edge. This gives an allowable delay of ten clock periods, minus the CP to Q delay of the 11C90 and the M to CP set-up time. If the external logic uses the negative output transition as its active edge, the allowable delay is reduced to five clock periods minus the aforementioned delay and set-up time.

Capacitively coupled triggering is simplified by the 400 Ω resistor which connects pin 15 to the internal V_{BB} reference. By connecting this to the CP input, as shown in Figure a, the clock is automatically centered about the input threshold. A clock duty cycle of 50% provides the fastest operation, since the flip-flops are master/slave types with offset clock thresholds between master and slave. This feature ensures that the circuit will operate with clock waveforms having very slow rise and fall times, and thus, there is no minimum frequency restriction. Recommended minimum and maximum clock amplitude as a function of a frequency and temperature are shown in the graph labeled Figure e. When the CP or any other input is driven from another ECL circuit, normal ECL termination methods are recommended. One method is indicated in Figure b. Other ECL termination methods are discussed in the Fairchild ECL Handbook, Chapters 4 and 5.

When an M input is to be driven from a TTL output operating from the same V_{CC} and ground (V_{EE}), the internal 2 k resistor can be used to pull the TTL output up as shown in Figure c. Some types of TTL outputs will only pull up to within two diode drops of V_{CC}, which is not high enough for 11C90 inputs. The resistor will pull the signal up through the threshold region, although this final rise may be somewhat slow, depending on wiring capacitance. A resistor network that gives faster rise and also lower impedance is shown in Figure d.

The ECL outputs have no pull-down resistors and can drive series or parallel terminated transmission lines. For short interconnections that do not require impedance matching, a 270 to 510 Ω resistor to V_{EE} can be used to establish the V_{OL} level. Both V_{CC} pins must always be used and should be connected together as close to the package as possible. Pin 12 must always be connected to the V_{EE} side of the supply, while pin 13 is required only if the TTL output is used. Low impedance V_{CC} and V_{EE} distribution and rf bypass capacitors are recommended to prevent crosstalk with other circuits.

COUNT SEQUENCE TABLE

	Q_1	Q_2	Q_3	Q_4(QTTL)	
	H	H	H	H	÷ 11
÷ 10	L	H	H	H	
	L	L	H	H	
	L	L	L	H	
	H	L	L	H	
	H	H	L	H	
	L	H	H	L	
	L	L	H	L	
	L	L	L	L	
	H	L	L	L	
	H	H	L	L	

Note: A HIGH on MS forces all Qs HIGH.

OPERATING MODE TABLE

INPUTS				OUTPUT RESPONSE
MS	$\overline{CE}$	M_1	M_2	
H	X	X	X	Set HIGH
L	H	X	X	Hold
L	L	L	L	÷ 11
L	L	H	X	÷ 10
L	L	X	H	÷ 10

X = Immaterial

CHAPTER 6

REPLACEABLE PARTS

6-1. INTRODUCTION

6-2. This chapter contains the parts lists for each assembly in the Model 1702 Signal Generator. Chapter 7 shows the assemblies where the listed parts are installed. Ordering information is included and should be used when purchasing parts from the factory. Explanation of the column listings and Table 6-1 Manufacturer's Code-To-Name Index are also included.

6-3. PART ORDERING INFORMATION

6-4. To order a part from the Replaceable Parts List, state the Systron Donner part number, indicate the quantity required and address the order to the nearest Systron Donner Sales or Service Center.

6-5. To order a part not listed in the Replaceable Parts List, state the instrument model number, instrument serial number, the descrription of parts required. Address the order to the nearest Systron Donner Sales or Service Center.

6-6. PARTS LIST

6-7. The replaceable parts lists are placed in assembly numbered sequence (see table 6-2). Each column in the parts lists provides specific information relating to the listed parts as follows:

(1) ITEM: This is the find number column and list those find numbers as called out on the respective assembly drawing.

(2) DESIGNATOR: Reference numbers applicable to assemblies are listed in alpha-numeric order.

(3) COMPONENT NOMENCLATURE AND DESCRIPTION: Component names and specifications are provided in this column and include value, tolerance, wattage rating, working voltage, construction, etc.

(4) MANUFACTURER'S CODE: H4-2 Federal Supply Code numbers are listed to identify component manufacturers. A Manufacturers Code-To-Name Index is provided in this chapter for cross-reference.

(5) MANUFACTURER'S PART NUMBER: True manufacturer part numbers are listed in this column.

(6) SD STOCK NUMBER: The Systron Donner identifier part number is listed in this column.

(7) T/Q (Total Quantity): This quantity, appearing after an item entry, indicates the number of times the component is used in that assembly. The total quantity for each part is given only once - at the first appearance of the part nuimber in the list.

Table 6-1. Manufacturer's Code-To-Name Index

Mfr. Code	Manufacturer Name	Address	Zip Code
00213	Nytronics Components Group Inc.	Darlington, SC	29532
00853	Sangamo Weston Inc. Capacitor Div.	Pickens, SC	29671
01121	Allen Bradley Co.	Milwaukee, WI	53203
01295	Texas Instruments Inc. Semiconductor Group	Dallas, TX	75265
02660	Bunker Ramo Electra Crop. Amphenol Division	Broadview, IL	60153
02735	RCA Corp Solid State Div.	Somerville, NJ	08876
03296	Nylon Molding Corp.	Temple City, CA	91780
03508	General Electric Co. Semiconductor Products Div.	Auburn, NY	13021
03877	Gilbert Engineering Co. Inc. Transition Electronic Corp.	Gleendale, AZ	85301
04222	AVX Ceramics Div.-AVX Corp.	Myrtle Beach, SC	29577
04713	Motorola Semiconducts Prod. Inc.	Phoenix, AZ	85008
06540	Amatom Electronic Hardware Division of Mite Corp.	New Haven, CT	06515
06560	Airco Inc. Airco Electronics	Nogales, AZ	85621
07263	Fairchild Camera and Instrument Corp. Semiconductor Div.	Mountain View, CA	94042
07700	Technical Wire Products Inc.	Cranford, NJ	07016
08289	Delbert Blinn Co. Inc.	Pomona, CA	91769
09922	Burndy Corp.	Norwalk, CT	06856
11236	CTS of Berne Inc.	Berne, IN	46711
13103	Thermalloy Co.	Dallas, TX	75234
14298	American Components Inc. RPC Div.	Triangle Park, NC	27709
14752	Electro Cube Inc.	San Gabriel, CA	91776
15542	Mini Circuits Lab Div of Scientific Components Corp.	Brooklyn, NY	11235
16179	M/A-Com Omni Spectra Inc. Microwave Component Division	Farmington, MI	48024
16299	Corning Class Works	Raleigh, NC	27604
18324	Signetics Corp. Military Products Division	Sacramento, CA	95834
19701	Mepco/Electra Inc.	Mineral Wells, TX	76067
20932	Illinois Tool Works Inc. Emcom Division	San Diego, CA	92121
21604	Bucheye Stamping Co.	Columbus, OH	43207
22599	Amerace Corp. ESNA Div.	Van Nuys, CA	91411
23880	Stanford Applied Engineering Inc.	Santa Clara, CA	95050
25088	Siemeuc Corp.	Iselin, NJ	08830
25403	Amperex Electronics Corp.	Slaterville, RI	02876
27014	National Semiconductors Corp.	Santa Clara, CA	95051
27264	Molex Inc.	Lisle, IL	60532
28480	Hewlett-Packard Co. Corp.	Palo Alto, CA	94304
28520	Heyman Molded Products	Kenilworth, NJ	07033
30161	AAVID Engineering Inc.	Laconia, NH	03246
30817	Instrument Specialties Co. Inc.	Delaware Water Gap, PA	18327
32159	West-Cap Arizona	Tucson, AZ	85706

Table 6-1. Manufacturer's Code-To-Name Index (Cont'd)

Mfr. Code	Manufacturer Name	Address	Zip Code
50101	Freq. Sources Inc. GHz Div.	South Chelmsford, MA	01824
50522	Monsanto Industries Chemicals Co. Electronic Special Products	Palo Alto, CA	94303
51628	Tec Inc.	Tucson, AZ	85705
52542	Systron Donner Corp. Instrument Div.	Concord, CA	94518
52673	KSW Electronics Inc.	Burlington, MA	01803
54453	Sullins Electronic Crop.	San Marcos, CA	92069
55566	RAF Electronic Hardware Inc.	Stratford, CT	06497
56289	Sprague Electric Co.	North Adams, MA	01247
59993	International Rectifier Semiconductor Division	Los Angeles, CA	90069
70903	Belden Corp.	Geneva, IL	60134
71279	Midland-Ross Corp. Cambridge Division	Cambridge, MA	02140
71450	CTS Corp.	Elkhart, IN	46514
71590	Centralab Inc.	Fort Dodge, IA	50501
72982	Murata Erie North American Ins.	Erie, PA	16512
73138	Beckman Instruments Inc. Helipot Div.	Fullerton, CA	92634
73734	Federal Screw Products Inc.	Chicago, IL	60618
73803	Texas Instruments Inc.	Attleboro, MA	02703
75042	TRW Electronic Components Fixed Resistors Philadelphia Div.	Philadelphia, PA	19108
75915	Tracor Littlefuse Inc.	Des Plaines, IL	60016
78189	Illinois Tool Works Inc. Shakeproof Division	Elgin, IL	60120
78553	Eaton Crop. Engineered Fasteners Division	Cleveland, OH	44101
79963	Zierick Mfg. Co.	Mount Kisco, NY	10549
80205	National Aerospace Standard		
80539	SPS Technologies Inc. Aerospace and Industrial Prod. Div.	Santa Ana, CA	92702
81073	Grayhill Inc.	La Grange, IL	60525
81349	MIL Specifications		
82389	Switchcraft Inc. Subsidery of Raytheon Co.	Chicago, IL	60630
82647	Texas Instruments Inc. Control Products Div.	Attleboro, MA	02703
83330	Herman H. Smith Inc.	Manasquan, NJ	08736
85480	Weckesser Co. Inc. Div. of W.H. Brady Co.	Milwaukee, WI	60641
86928	Seastrom Mfg. Co. Inc.	Glendale, CA	91201
88245	Winchester Electronics Litton Systems-USECO Div.	Van Nuys, CA	91409
90201	Mallory Capacitor Co. Sub of Emhart Industries	Indianapolis, IN	46206
91418	Radio Materials Corp.	Chicago, IL	60646
91637	Dale Electronics Inc.	Columbus, NE	60601

Table 6-1. Manufacturer's Code-To-Name Index (Cont'd)

Mfr. Code	Manufacturer Name	Address	Zip Code
96067	Microwave Associates Land Mobile Communications Div.	Sunnyvale, CA	94088
96733	San Fernando Electric Mfg. Co.	San Fernando, CA	91341
96906	MIL Specifications		
98291	Sealectro Corp.	Mamaroneck, NY	15044
99392	MEPCO/Electra Inc.	Roxboro, NC	27573
99800	American Precision Industries Inc. Delevan Div.	East Aurora, NY	14052
99942	Centralab Inc.	Milwaukee, WI	53209

TABLE 6-2. PARTS LIST LOCATION

Title	Assembly Number	Page Number
Final Assembly	057716	6-6
Test Assembly	057586	6-7
Bottom Cover Assembly	067310	6-9
Front Panel Assembly	057585	6-10
A2, Power Supply chassis Assembly	057559	6-11
A2A1, Power Supply Regulator Assembly	057646	6-12
A2A3A1, +5 V Regulator PC Assembly	05753501	6-13
A2A1A2, -5.2 V Regulator PC Assembly	05753502	6-14
A2A2, Rectifier PC Assembly	05760601	6-15
A3, Motherboard PC Assembly	05790001	6-16
A3A1, Switch PC Assembly	05754101	6-19
A3A2, Display PC Assembly	05754401	6-20
A3A3, Mod Control PC Assembly	05788201	6-22
A4, Synthesizer Assembly	067898	6-26
A4A1, AC Discriminator PC Assembly	05563901	6-27
A4A2, 10 MHz VCO PC Assembly	05566201	6-30
A4A3, DC Discriminator PC Assembly	05537401	6-35
A4A4, Time Base PC Assembly	05395401	6-39
A4A5, Source 2 PC Assembly	05362401	6-41
A4A6, Source 3 PC Assembly	05373501	6-44
A4A8, 400 MHz Reference PC Assembly	05566801	6-48
A4A9, Control Logic PC Assembly	05567101	6-52
A4A10, Divide-By-N PC Assembly	05567001	6-54
A4A11, Source 4 PC Assembly	05372401	6-57
A4A12, Phase Detector PC Assembly	05538501	6-61
A4A13, Source 5 PC Assembly	05797001	6-65
A4A14, Amplifier PC Assembly	05392901	6-70
A4A15, Synthesizer Motherboard Assembly	06738001	6-76
A4A16, Mixer PC Assembly	05547001	6-78
A4A17, Connector PC Assembly	05569301	6-79
A5, Std Clock Oscillator Chassis Assembly	05756001	6-80
A5A1, Std Oscillator Control PC Assembly	05754001	6-81
A5, Opt 01 High Stability Clock Oscillator Assembly	05756003	6-83
A5A1, Opt 01 High Stability Osc Control PC Assembly	05754003	6-84
A5, Option 02 TCXO Oscillator Chassis Assembly	05756002	6-86
A5A1, Option 02 TCXO Oscillator Control PC Assembly	05754002	6-87
Option 06, IEEE Frequency Control Assembly	057924	6-89
Option 07, IEEE Frequency and Amplitude Assembly	06725501	6-90
A3A4, Frequency Control PC Assembly	05784101	6-91
A3A5, Amplitude Control PC Assembly	05797101	6-96
A4A5, Options 06/07 Source 2 PC Assembly	06700501	6-102

REPLACEABLE PARTS LIST

TITLE		Final Assembly 057716 Rev C				
ITEM	REF	COMPONENT DESCRIPTION	MFR'S CODE	MANUFACTURER'S PART NUMBER	SD STOCK NUMBER	T/Q
7		ASSEMBLY, Test	52542	057586	05758601	1
9		PANEL, Decorative	52542	057528	057528	1
10		ASSEMBLY, Bottom Cover	52542	067310	067310	1
11		COVER, Top	52542	03376005	03376005	1
12		COVER, Side	52542	03356505	03356505	1
13		HANDLE	52542	03357005	03357005	2
14		BLOCK, Rear End	52542	03903401	03903401	2
15		BLOCK, Front End	52542	03367401	03367401	2
16		TRIM, Front	52542	033762	033762	2
17		TRIM, Side	52542	03985905	03985905	2
18		WINDOW	52542	057538	057538	1
19		BRACKET, Cover Mtg.	52542	0398857	039857	2
20		STRIP, Trim	52542	057536	057536	1
21		INSERT, Trim Strip	52542	057537	057537	2
22		RAIL, Side Trim Bottom	52542	067308	067308	2
23		KNOB, Skirt	21604	PS125SL-2-BLK	117217	2
24		KNOB	21604	70CPL-(L)-2	106857	2
25		BOARD, Extender	52542	057102	057102	1
26		CORD, Line	70903	BR-1736	102407	1
		MOUNT, Rack	52542	03998706	03998706	A/R
		MOUNT, Slide	52542	04546305	04545305	A/R
		OPTION 01, High Stability Oscillator	52542	05756003	05756003	A/R
		OPTION 02, TCXO Oscillator	52542	05756002	05756002	A/R
		OPTION 03, Rear Connector	52542	057922	057922	A/R
		OPTION 06, IEEE Frequency	52542	057924	057924	A/R
		OPTION 07, IEEE Frequency and Amplitude	52542	06725501	06725501	A/R

REPLACEABLE PARTS LIST

TITLE Test Assembly 057586 Rev L (Figure 7-1)

ITEM	REF	COMPONENT DESCRIPTION	MFR'S CODE	MANUFACTURER'S PART NUMBER	SD STOCK NUMBER	T/Q
1	A4	ASSEMBLY, Synthesizer	52542	067898	067898	1
2	A2	ASSEMBLY, P.S. Chassis	52542	057559	057559	1
3	A2A1	ASSEMBLY, P.S. Regulator	52542	057646	057646	1
4	A5	ASSEMBLY, Osc. Regulator	52542	05756001	05756001	1
5	A1A1	ASSEMBLY, Front Panel	52542	057585	057585	1
6	A3	ASSEMBLY, Motherboard PC	52542	05790001	05790001	1
7	A3A3	ASSEMBLY, Mod Control PC	52542	05788201	05788201	1
8	A3A1	ASSEMBLY, Switch PC	52542	05754101	05754101	1
9	A3A2	ASSEMBLY, Display PC	52542	05754401	05754401	1
11		ATTENUATOR, RF	52542	053994	053994	1
12		RECEPTACLE, AC W/RF Filter	05345	3EF1	102461	1
13		POST, Fuse	75915	342004	102409	1
14		FUSE, Slo-Blo 3AG 1.5A	75915	31301.5	100591	1
15		GUSSET, Right and Rear Panel	52542	057709	057709	1
16		GUSSET, Left and Rear Panel	52542	057527	057527	1
17		BRACE, Center	52542	057521	057521	1
18		HEATSINK	52542	057505	057505	1
19		SCREW, PHMS 2-56 x 1/4	96906	MS51957-3	10062504	2
20		SCREW, PHMS 4-40 x 7/16	96906	MS51957-16	10062607	2
21		SCREW, PHMS 6-32 x 1/4	96906	MS51957-26	10063204	4
22		SCREW, PHMS 6-32 x 5/16	96906	MS51957-27	10063205	20
23		SCREW, PHMS 6-32 x 3/8	96906	MS51957-28	10063206	4
24		SCREW, PHMS 6-32 x 7/16	96906	MS51957-29	10063207	18
25		SCREW, PHMS 6-32 x 5/8	96906	MS51957-31	10063210	1
26		SCREW, PHMS 8-32 x 3/8	96906	MS51957-43	10064206	6
27		WASHER, Split No. 2	96906	MS15795-802	100614	2
28		WASHER, Flat No. 4	96906	MS15795-803	100703	8
29		WASHER, Flat No. 6	96906	MS15795-805	100704	11
30		WASHER, Split Lock No. 2	96906	MS35337-77	100661	2
31		WASHER, Split No. 4	96906	MS35338-135	100711	7
32		WASHER, Split No. 6	96906	MS35338-136	100712	42
33		WASHER, Split No. 8	96906	MS35338-137	100713	6
34		NUT, Hex 2-56	96906	MS35649-224	100636	2
35		NUT, Hex 4-40	96906	MS35649-244	100707	6
36		LUG, Solder No. 4	83330	1416-4	100509	1
37		SPACER, Round 6 x 1/4	83330	2100	100691	1
38		CLAMP, Cable 3/8 D	85480	W4NY-375NA	100718	1
39		BRACKET, Angle	79963	176	100849	2
41		SCREW, PHMS 6-32 x 1/4	96906	MS51957-26	10063204	2

REPLACEABLE PARTS LIST

TITLE Test Assembly 057586 (Cont'd)

ITEM	REF	COMPONENT DESCRIPTION	MFR'S CODE	MANUFACTURER'S PART NUMBER	SD STOCK NUMBER	T/Q
42		SCREW, PHMS 4-40 x 7/16	96906	MS51957-16	10062607	2
43		SCREW, FHMS 8-32 x 1/4	96906	MS24693-C46	10074304	2
44		PLUG, AC Line Selection	52542	04767802	04767802	1
45		ASSEMBLY, Semi-Rigid Cable	52542	055782	055782	1
46		CONNECTOR, Type N	16179	21011	101185	1
47		NUT, Kep 4-40	78189	511-041800-00	100941	4
48		PLATE, Cover 24-pin (Mtg. on Rear Panel)	52542	03141811	03141811	1
49		PLUG, Button (Rear Panel)	83330	652	100840	2
50		PLUG, Button (Rear Panel)	83330	654	112644	1
51		GUIDE, Vertical Card	23880	1250V	102781	2
52		SCREW, Socket Head 6-32	80539	KS17-632-6	10336106	2

REPLACEABLE PARTS LIST

TITLE Bottom Cover Assembly 067310 Rev A (Figure 7-2)

ITEM	REF	COMPONENT DESCRIPTION	MFR'S CODE	MANUFACTURER'S PART NUMBER	SD STOCK NUMBER	T/Q
1		COVER, Bottom	52542	067309	067309	1
2		FEET, Set	21604	PP40012,40013	101059	1
3		NUT, Speed 6-32	78553	C7494-632-4	102907	6
4		SCREW, PHMS 6-32 x 5/8	96906	MS51957-31	10063210	4
5		SCREW, PHMS 6-32 x 1/2	96906	MS51957-30	10063208	2
6		WASHER, Int Tooth No. 6	96906	MS35333-71	100647	2
7		STIFFERER, Rear	52542	067311	067311	1
8		STIFFENER, Front	52542	067212	067212	1
9		BAIL	52542	101058	101058	1

REPLACEABLE PARTS LIST

TITLE	Front Panel Assembly 057585 Rev F (Figure 7-3)					
ITEM	REF	COMPONENT DESCRIPTION	MFR'S CODE	MANUFACTURER'S PART NUMBER	SD STOCK NUMBER	T/Q
1		SUB-PANEL, Front	52542	057523	057523	1
2		RESISTOR, Variable 500 Ω 20%	71450	VA-305	117294	2
3		RESISTOR, Variable 1 k 10%, 2 W	52542	103419	103419	1
4	S1	SWITCH, Slide 3-pos	82389	46313LDR	102348	1
5	S2	SWITCH, Indicator W/LED	51628	SSBL-805-AL02	117221	1
6	J2,J3	CONNECTOR, BNC	81349	UG-1094A/U	101170	2
7		SPACER	52542	075503	075503	2
8		NUT, Dress 1/4-32	81073	30C1023	100920	1
10		LUG, Solder	79963	814	107077	2
11		WASHER, Split No. 4	96906	MS35338-135	100711	2
12		NUT, Hex 4-40	80205	NAS671C4	100622	2

REPLACEABLE PARTS LIST

TITLE	A2, Power Supply Chassis Assembly 057559 Rev F (Figure 7-4)					
ITEM	REF	COMPONENT DESCRIPTION	MFR'S CODE	MANUFACTURER'S PART NUMBER	SD STOCK NUMBER	T/Q
1		CHASSIS, Power Supply	52542	057526	057526	1
2	T1	TRANSFORMER	52542	067626	067626	1
3		GROMMET	28520	SB-687-9	103003	1
5	C1, C2	CAPACITOR, El Can 30 kμF +100/-10%, 15 V	99392	91S15JA34	103188	2
6		CLAMP, Cap 2" ID	90201	VR8	106879	2
7	C4, C5	CAPACITOR, El Can 4600 μF +100/-10, 40 V	99392	91S40HA462	103189	2
8		CLAMP, Capacitor 1-3/8" ID	30161	1375C2H	100725	3
9	C3	CAPACITOR, El Can 1800-4800 μF, 50 V	99392	91M50HA242S	103063	1
11	A2	ASSEMBLY, Rectifier PC	52542	05760601	05760601	1
13		SCREW, PHMS 4-40 x 1/2	96906	MS51957-17	10062608	2
14		WASHER, Flat No. 4	96906	MS15795-803	100703	4
15		NUT, Nylock 4-40	22599	68-1660-40	100715	2
16		SCREW, PHMS 6-32 x 1/2	96906	MS51957-30	10063208	9
17		WASHER, Flat No. 6	96906	MS15795-805	100704	18
18		NUT, Kep 6-32	78189	511-061800-00	100862	8
19		SCREW, PHMS 10-32 x 1/4	96906	MS51957-59	10064404	10
20		LUG, Solder No. 10	78189	2104-10-00	100989	10
21		SCREW, PHMS 6-32 x 5/16	96906	MS51957-27	10063205	7
22		WASHER, Split No. 6	96906	MS35338-136	100712	4
23		CLAMP, Cable 3/8 D	85480	W4NY-375NA	100718	1
24		CLAMP, Cable 1/2"	85480	F4NY-500BK	100765	1
25		SCREW, PHMS 8-32 x 3/8	96906	MS51957-43	10064206	5
26		WASHER, Flat No. 8	96906	MS15795-807	100705	1
27		WASHER, Split No. 8	96906	MS35338-137	100713	6
28		SCREW, PHMS 8-32 x 1/2	96906	MS51957-45	10064208	1
30		LUG, Solder No. 8	79963	501-.169	100487	1
31		SCREW, PHMS 8-32 x 1/4	96906	MS51957-41	10064204	1
32		NUT, Hex 8-32	73734	70208	100659	1
33		NUT, Kep small 6-32	78189	511-061800-01	112472	5
34		SCREW, PHMS 6-32 x 7/16	96906	MS51957-29	10063207	1

REPLACEABLE PARTS LIST

TITLE A2A1, Power Supply Regulator Assembly 057646 Rev D (Figure 7-6)

ITEM	REF	COMPONENT DESCRIPTION	MFR'S CODE	MANUFACTURER'S PART NUMBER	SD STOCK NUMBER	T/Q
1		HEATSINK	52542	057522	057522	1
2	A1	ASSEMBLY, +5 V Regulator PC	52542	05753501	05753501	1
3	A2	ASSEMBLY, -5.2 V Regulator PC	52542	05753502	05753502	1
4	U1	INTEGRATED CIRCUIT Voltage Regulator 15 V	04713	MC7815CT	103039	1
5	U2, U3	INTEGRATED CIRCUIT Voltage Regulator	04713	MC7805CT	045256	2
6	Q1	TRANSISTOR, SIPNP 60 V	04713	2N6060	103332	1
7	Q2	TRANSISTOR, SIPNP	04713	2N4918	101387	1
8	Q4	TRANSISTOR, SINPN	04713	2N4921	101386	1
9	Q3	TRANSISTOR, SINPN 60 V	04713	2N6043	103333	1
10	U6	INTEGRATED CIRCUIT Voltage Regulator	04713	MC7905.2CP	103033	1
11	U5	INTEGRATED CIRCUIT Voltage Regulator	04713	MC7915CT	103040	1
12	U4	INTEGRATED CIRCUIT Voltage Regulator +24 V	07263	MC7824	045246	1
13		GROMMET, Caterpillar	03296	051HA	102749	1
14		INSULATOR, Transistor (P/O Q1,Q3 - U5,U6)	08289	SK-73-48-13	103352	4
15		WASHER, Shoulder Nylon (P/O Q1,Q3 - U5,U6)	02735	DF137A	103397	4
16		SCREW, PHMS 4-40 x 3/8	96906	MS51957-15	10062606	11
17		WASHER, Compression No. 4 (P/O Q2,Q4)	04713	B52200F003	103351	2
18		WASHER, Split No. 4	96906	MS35338-135	100711	9
19		SCREW, PHMS 6-32 x 5/8	96906	MS51957-31	10063210	4
20		WASHER, Split No. 6	96906	MS35338-136	100712	4
21		WASHER, Mica	86928	5624-37-5	112371	2

REPLACEABLE PARTS LIST

TITLE	A2A3A1, +5 V Regulator PC Assembly 05753501 Rev B (Figure 7-6)					
ITEM	REF	COMPONENT DESCRIPTION	MFR'S CODE	MANUFACTURER'S PART NUMBER	SD STOCK NUMBER	T/Q
6		BOARD, PC	52542	057535	057535	1
	C6	CAPACITOR, Electrolytic 100 µF, 25 V	25088	841283-B5107-T	100165	1
	C7	CAPACITOR, Tant 1 µF 10%, 35 V	56289	150D105X9035A2	100082	3
	C8	Same as C7				
	C9	CAPACITOR, Tant 10 µF 10%, 20 V	56289	150D106X9020B2	100063	2
	C10	Same as C7				
	C11	Same as C9				
	R1	RESISTOR, WW 2.0 Ω 5%, 2 W	56289	240E2205	101772	1
	R2	RESISTOR, WW .51 Ω 5%, 2 W	75042	BWH	103413	1
21		SPACER, Rectangular	88245	B1590B-11	100489	2
22		SPACER, 4-40 x 3/8	71279	1300-12	100973	1

REPLACEABLE PARTS LIST

TITLE	A2A1A2, -5.2 V Regulator PC Assembly 05753502 Rev B (Figure 7-6)					
ITEM	REF	COMPONENT DESCRIPTION	MFR'S CODE	MANUFACTURER'S PART NUMBER	SD STOCK NUMBER	T/Q
6		BOARD, PC	52542	057535	057535	1
	C12	CAPACITOR, Electrolytic 100 µF, 25 V	25088	841283-B5107-T	100165	3
	C13	CAPACITOR, Tant 1 µF 20%, 50 V	56289	150D105X0050A2	103275	3
	C14	Same as C13				
	C15	CAPACITOR, Tant 6.8 µF 10%, 35 V	56289	150D685X9035B2	100182	1
	C16	Same as C13				
	C17	CAPACITOR, Tant 10 µF 10%, 20 V	56289	150D106X9020B2	100063	1
	R3	RESISTOR, WW 2.0 Ω 5%, 2 W	56289	240E2205	101772	1
	R4	RESISTOR, WW .51 Ω 5%, 2 W	75042	BWH	103413	1
		SPACER, Rectangular	88245	B1590B-11	100489	2
		SPACER, 4-40 x 3/8	71279	1300-12	100973	1

REPLACEABLE PARTS LIST

TITLE	A2A2, Rectifier PC Assembly 05760601 Rev B (Figure 7-5)					
ITEM	REF	COMPONENT DESCRIPTION	MFR'S CODE	MANUFACTURER'S PART NUMBER	SD STOCK NUMBER	T/Q
7		BOARD, PC	52542	057606	057606	1
	CR1 thru CR4	DIODE, Rectifier 50 V	04713	1N4719	720453	4
	CR5 thru CR10	DIODE, Rectifier 50 V	59993	30S05	103252	6
22		TERMINAL, Swage	88245	1309B-1	100508	11
24		SPACER, Swage 6-32	88245	1530-B-1/4	100783	4

REPLACEABLE PARTS LIST

TITLE	A3, Motherboard PC Assembly 05790001 Rev K (Figure 7-8)				
ITEM	REF	COMPONENT DESCRIPTION	MFR'S CODE	MANUFACTURER'S PART NUMBER	SD STOCK NUMBER	T/Q
		BOARD, PC	52542	057900	057900	1
	C1	CAPACITOR, Ceramic 0.001 µF 20%, 50 V	71590	CW15C102M	100251	2
	C2	Same as C1				
	C3	CAPACITOR, Tant 1 µF 10%, 35 V	56289	150D105X9035A2	100082	4
	C4	CAPACITOR, Ceramic .01 µF +80-20%, 100 V	91418	BT0.01P80M20%	100103	6
	C5	CAPACITOR, Tant 6.8 µF 10%, 35 V	56289	150D685X9035B2	100182	2
	C6	Same as C5				
	C7 thru C10	Same as C4				
	C11	Same as C3				
	C12	Same as C3				
	C13	Same as C4				
	C14	Same as C3				
	CR1	DIODE, Signal 70 V	28480	5082-2800	100442	1
	CR2	DIODE, Signal 50 V	03508	1N4151	100385	4
	CR3	Same as CR2				
	CR4	DIODE, Rectifier 400 V	02735	1N5395	100413	3
	CR5	Same as CR2				
	CR6	Same as CR2				
	CR7	Same as CR4				
	CR8	Same as CR4				
	Q1	Not Used				
	Q2	TRANSISTOR, SINPN 40 V	27014	PN2222A	103735	5
	Q3	TRANSISTOR, SINPN 40 V	07263	PN3640-18	101357	2
	Q4	Same as Q3				
	Q5	Same as Q2				
	Q6	Same as Q2				
	Q7	TRANSISTOR, SIPNP 60 V	07263	PN3645-18	101367	1
	Q8	Same as Q2				
	Q9	Same as Q2				
	R1	RESISTOR, MF 10 k 1%, 1/8 W	19701	MF5C-E-1002-F	101930	2
	R2	RESISTOR, CC 56 Ω 5%, 1/4 W	01121	CB5605	101735	1

REPLACEABLE PARTS LIST

TITLE A3, Motherboard PC Assembly 05790001 (Cont'd)

ITEM	REF	COMPONENT DESCRIPTION	MFR'S CODE	MANUFACTURER'S PART NUMBER	SD STOCK NUMBER	T/Q
	R3	RESISTOR, CC 220 k 5%, 1/4 W	01121	CB2235	101610	1
	R4	RESISTOR, CC 1 k 5%, 1/4 W	01121	CB1025	101569	4
	R5	Same as R4				
	R6	RESISTOR, CC 47 kΩ 5%, 1/4 W	01121	CB4735	101574	1
	R7	RESISTOR, CC 100 k 5%, 1/4 W	01121	CB1045	101558	1
	R8	RESISTOR, Variable 500 k 20%, 1/2 W	11236	340PC504B	102054	1
	R9	RESISTOR, CC 4.7 kΩ 5%, 1/4 W	01121	CB4725	101598	1
	R10	RESISTOR, CC 27 kΩ 5%, 1/4 W	01121	CB2735	101587	2
	R11	RESISTOR, CC 10 k 5%, 1/4 W	01121	CB1035	101570	4
	R12	RESISTOR, CC 2.7 k 5%, 1/4 W	01121	CB2725	101599	1
	R13	Same as R11				
	R14	Same as R10				
	R15	RESISTOR, CC 820 Ω 5%, 1/4 W	01121	CB8215	101567	1
	R16	RESISTOR, CC 22 k 5%, 1/4 W	01121	CB2235	101572	1
	R17	Same as R11				
	R18	RESISTOR, CC 120 k 5%, 1/4 W	01121	CB1245	101580	2
	R19	Same as R4				
	R20	RESISTOR, CC 10 Ω 5%, 1/4 W	01121	CB1005	101557	1
	R21	Same as R18				
	R22	Same as R4				
	R23	Same as R11				
	R24	Same as R1				
	R25	RESISTOR, CC 150 Ω 5%, 1/4 W	01121	CB1515	101615	1
	R26 thru R29	Not Used				
	R30	RESISTOR, CC 620 Ω 5%, 1/8 W	01121	BB6215	102497	1

REPLACEABLE PARTS LIST

TITLE A3, Motherboard PC Assembly 05790001 (Cont'd)

ITEM	REF	COMPONENT DESCRIPTION	MFR'S CODE	MANUFACTURER'S PART NUMBER	SD STOCK NUMBER	T/Q
	U1	INTEGRATED CIRCUIT Operational Amplifier	27014	LM301AH	025745	1
	VR1	DIODE, Zener 10 V	04713	1N961B	100395	1
34		CONNECTOR, PC Edge 22-pin	54453	ISM22DRK-S50	102806	6
37		SOCKET, Shell 9-position	27264	03-06-1092	102812	1
38		CONNECTOR, Shell 12-position	27264	03-06-1122	102809	1
39		SOCKET, PIN PC Mt.	27264	02-06-7103	10282206	16
80		TERMINAL, Swage	88245	2000B-1	100482	86
81		TERMINAL, Swage	88245	1309B-1	100508	8
94		SCREW, PHMS 2-56 x 5/16	96906	MS51957-4	10062505	2
95		WASHER, Split No. 2	96906	MS15795-802	100614	2
96		WASHER, Split Lock No. 2	96906	MS35337-77	100661	2
97		NUT, Hex 2-56	96906	MS35649-224	100636	2
99		ASSEMBLY, Pushbutton Switch	52542	057516	057416	1
100		ASSEMBLY, Attenuator Coax Cable	52542	07729101	07729101	1

REPLACEABLE PARTS LIST

TITLE	A3A1, Switch PC Assembly 05754101 Rev B (Figure 7-10)				
ITEM	REF	COMPONENT DESCRIPTION	MFR'S CODE	MANUFACTURER'S PART NUMBER	SD STOCK NUMBER	T/Q
7		BOARD, PC	52542	057541	057541	1
	CR1 thru CR28	DIODE, Signal 50 V	03508	1N4151	100385	28
	R1 thru R4	RESISTOR, CC 470 kΩ 5%, 1/4 W	01121	CB4745	101630	4
	U1	INTEGRATED CIRCUIT BCD Decimal Decoder	04713	MC14028BCP	045286	1
	U2	INTEGRATED CIRCUIT, CMOS Inverted Buffer	04713	MC14050BCP	103492	1
20		ASSEMBLY, Switch	52542	057689	057689	1
21		CONNECTOR, Shell 9-pin	27264	03-06-2090	102811	1
22		TERMINAL, Connector	27264	02-06-2132	10282205	9
23		ASSEMBLY, Cable	52542	057625	057625	1

REPLACEABLE PARTS LIST

TITLE	A3A2, Display PC Assembly 05754401 Rev E (Figure 7-12)				
ITEM	REF	COMPONENT DESCRIPTION	MFR'S CODE	MANUFACTURER'S PART NUMBER	SD STOCK NUMBER	T/Q
6		BOARD, PC	52542	057544	057544	1
	C1	CAPACITOR, Ceramic .01 µF +80-20%, 100 V	91418	BTO.01P80M20%	100103	2
	C2	CAPACITOR, Tant 1 µF 10%, 35 V	56289	150D105X9035A2	100082	1
	C3	CAPACITOR, Tant 100 µF 10%, 20 V	56289	150D107X9020S2	100208	2
	C4	CAPACITOR, Mylar 0.1 µF 10%, 200 V	56289	192P10492	100199	2
	C5	Same as C4				
	C6	CAPACITOR, Tant 39 µF 10%, 10 V	56289	150D396X9010B2	100183	1
	C7	Same as C3				
	C8	Not Used				
	C9	Same as C1				
	CR1	DIODE, Signal 50 V	03508	1N4151	100385	3
	CR2	Not Used				
	CR3	Same as CR1				
	CR4	Same as CR1				
	DS1 thru DS4	DISPLAY, 7-Segment	52542	10317102	10317201	4
	DS5 thru DS10	LED, Orange	50522	MV5253 W/MTGGRM	103201	6
	Q1	TRANSISTOR, SINPN 15 V	07263	MPS3646-18	101369	1
	Q2	Not Used				
	Q3	TRANSISTOR, SINPN	04713	MPS-A12	101396	4
	Q4	Same as Q3				
	Q5	Same as Q3				
	Q6	Same as Q3				
	Q7	TRANSISTOR, SIPNP 60 V	07263	PN3645-18	101367	2
	Q8	Same as Q7				
	R1	RESISTOR, Metal Film 1 kΩ 1%, 1/8 W	81349	RN60D1001F	102097	1
	R2	RESISTOR, CC 18 kΩ 5%, 1/4 W	01121	CB1835	101579	1
	R3	RESISTOR, Metal Film 5.76 k 1%, 1/8 W	91637	CMF60T2	103424	1

REPLACEABLE PARTS LIST

TITLE	A3A2, Display PC Assembly 05754401 (Cont'd)				
ITEM	REF	COMPONENT DESCRIPTION	MFR'S CODE	MANUFACTURER'S PART NUMBER	SD STOCK NUMBER	T/Q
	R4	RESISTOR, Metal Film 2.74 kΩ 1%, 1/8 W	81349	RN60C2781F	106178	1
	R5	RESISTOR, CC 470 Ω 5%, 1/4 W	01121	CB4715	101625	1
	R6	RESISTOR, CC 470 kΩ 5%, 1/4 W	01121	CB4745	101630	1
	R7	RESISTOR, CC 330 kΩ 5%, 1/4 W	01121	CB3345	101658	1
	R8	Not Used				
	R9	RESISTOR, CC 4.7 kΩ 5%, 1/4 W	01121	CB4725	101598	1
	R10 thru R18	RESISTOR, CC 15 Ω 5%, 1/4 W	01121	CB1505	101764	11
	R19 thru R22	RESISTOR, CC 120 Ω 5%, 1/4 W	01121	CB1215	101717	6
	R23	RESISTOR, CC 1 k 5%, 1/4 W	01121	CB1025	101569	4
	R24	Same as R23				
	R25	Same as R19				
	R26	Same as R23				
	R27	Same as R23				
	R28	Same as R19				
	R29	Same as R10				
	R30	Same as R10				
	U1	INTEGRATED CIRCUIT, DVM A-D Converter	04713	MC14433P	117326	1
	U2	INTEGRATED CIRCUIT, TTL MSI 4-7 Decoder/Driver	01295	SN74LS247N	103166	1
	U3	INTEGRATED CIRCUIT, CMOS Dual D Flip-Flop	04713	MC14013BCP	103199	1
	U4	INTEGRATED CIRCUIT, TTL Quad 2-Input NOR Gate	04713	MC3002P	025739	1
	VR1	DIODE, Reference 6.2 V	99942	1N827	100386	1
		DIODE, Zener 5.1 V	03877	1N751A	100378	1
90		SPACER, LED 5/8L (P/O DS1)	83330	8896	117223	6
92	XDS1	SOCKET, WW 14-pin	73803	C91-14-00	102928	4
93		SOCKET, Spacer (P/O XDS1)	52542	057605	057605	2
94	XU1	SOCKET, IC 24-pin	73803	C84-24-02	103845	1

REPLACEABLE PARTS LIST

TITLE	A3A3, Mod Control PC Assembly 05788201 Rev J (Figure 7-14)				
ITEM	REF	COMPONENT DESCRIPTION	MFR'S CODE	MANUFACTURER'S PART NUMBER	SD STOCK NUMBER	T/Q
		BOARD, PC	52542	057882	057882	1
	C1	CAPACITOR, Ceramic .01 µF +80-20%, 100 V	91418	BT0.01P80M20%	100103	10
	C2	CAPACITOR, Ceramic 0.001 µF 20%, 50 V	71590	CW15C102M	100251	1
	C3	CAPACITOR, Ceramic 0.1 µF 20%, 50 V	56289	5C023104X0500C5	100178	1
	C4	CAPACITOR, Tant 1 µF 10%, 35 V	56289	150D105X9035A2	100082	2
	C5	CAPACITOR, D Mica 318 pF, 1%	00853	D155E321F-318	100244	3
	C6	Same as C5				
	C7	Same as C5				
	C8	Same as C4				
	C9	CAPACITOR, Ceramic 10 pF 1 kV	72982	831-000C0G0100D	100282	1
	C10	CAPACITOR, Ceramic 15 pF 1 kV	56289	10TCC-015	100355	1
	C11	CAPACITOR, Ceramic 33 pF 10%, 1 kV	71590	DD-330	100054	1
	C12	CAPACITOR, Tant 10 µF 10%, 20 V	56289	150D106X9020B2	100063	1
	C13	Same as C1				
	C14	CAPACITOR, Electrolytic 100 µF, 25 V	25088	841283-B5107-T	100165	2
	C15	Same as C14				
	C16 thru C23	Same as C1				
	CR1	DIODE, Signal 125 V	07263	FDH300	102703	11
	CR2	Same as CR1				
	CR3 thru CR6	DIODE, Signal 50 V	03508	1N4151	100385	4
	CR7 thru CR15	Same as CR1				
	Q1	TRANSISTOR, SIPNP 60 V	07263	PN3645-18	101367	3
	Q2	TRANSISTOR, SINPN 40 V	27014	PN2222A	103735	3
	Q3	Same as Q1				
	Q4	Same as Q2				
	Q5	Same as Q1				

REPLACEABLE PARTS LIST

TITLE A3A3, Mod Control PC Assembly 05788201 (Cont'd)

ITEM	REF	COMPONENT DESCRIPTION	MFR'S CODE	MANUFACTURER'S PART NUMBER	SD STOCK NUMBER	T/Q
	Q6	TRANSISTOR, JFET N-Channel	81349	2N4091	101409	4
	Q7	Same as Q6				
	Q8	TRANSISTOR, JFET P-Channel	04713	2N4342	101374	1
	Q9	Same as Q6				
	Q10	Same as Q2				
	Q11	Same as Q6				
	R1 thru R3	RESISTOR, CC 100 k 5%, 1/4 W	01121	CB1045	101558	10
	R4	RESISTOR, CC 10 k 5%, 1/4 W	01121	CB1035	101570	4
	R5	RESISTOR, CC 12 k 5%, 1/4 W	01121	CB1235	101565	2
	R6	RESISTOR, CC 220 Ω 5%, 1/2 W	01121	EB2215	101667	2
	R7	RESISTOR, CC 10 Ω 5%, 1/4 W	01121	CB1005	101557	2
	R8	Same as R7				
	R9	Same as R6				
	R10	RESISTOR, CC 3.3 k 5%, 1/4 W	01121	CB3325	101559	2
	R11	Same as R10				
	R12	Same as R4				
	R13	Same as R1				
	R14	Same as R1				
	R15	RESISTOR, Variable 20 k 10%, 3/8 W	73138	89PR20K	102470	1
	R16	Not Used				
	R17	Same as R1				
	R18	Same as R1				
	R19	RESISTOR, Variable 50 k 10%, 3/8 W	73138	89PR50K	102153	1
	R20	RESISTOR, Metal Film 10 k 1%, 1/8 W	81349	RN60C1002F	106162	5
	R21	RESISTOR, Metal Film 49.9 k 1%, 1/8 W	81349	RN60E4992F	102296	1
		RESISTOR, Metal Film 866 k 1%, 1/8 W	91637	CMF-60-T1	103357	2
	R23	Same as R22				

REPLACEABLE PARTS LIST

TITLE A3A3, Mod Control PC Assembly 05788201 (Cont'd)

ITEM	REF	COMPONENT DESCRIPTION	MFR'S CODE	MANUFACTURER'S PART NUMBER	SD STOCK NUMBER	T/Q
	R24	RESISTOR, Metal Film 71.5 k 1%, 1/8 W	81349	RN60C7152F	106199	1
	R25	RESISTOR, CC 4.7 kΩ 5%, 1/4 W	01121	CB4725	101598	3
	R26	Same as R4				
	R27	RESISTOR, Metal Film 20 k 1%, 1/8 W	81349	RN60C2002F	106172	4
	R28	RESISTOR, Metal Film 12.7 k 1%, 1/8 W	81349	RN60C1272F	106165	1
	R29	Same as R4				
	R30	RESISTOR, Variable 25 k 10%, 1/2 W	73138	89PR25K	106136	2
	R31	Same as R27				
	R32	RESISTOR, Metal Film 237 k 1%, 1/8 W	16299	NA60237K1%	106227	1
	R33	RESISTOR, Variable 250 k 10%, 1/2 W	73138	89PR250K	106137	1
	R34	RESISTOR, CC 18 k 5%, 1/4 W	01121	CB1835	101579	1
	R35	RESISTOR, Metal Film 46.4 k 1%, 1/4 W	81349	RN65D4642F	102484	1
	R36	Same as R1				
	R37	RESISTOR, Variable 10 k 10%, 3/8 W	73138	89PR10K	102472	2
	R38	RESISTOR, Metal Film 6.81 k 1%, 1/8 W	91637	CMF60-T9	103741	1
	R39	Same as R5				
	R40	RESISTOR, Metal Film 100 k 1Ω, 0.1 W	81349	RN55C1003F	102525	1
	R41	Same as R30				
	R42	Same as R20				
	R43	Same as R27				
	R44	Same as R20				
	R45	Same as R25				
	R46	Same as R20				
	R47	Same as R25				
	R48	Same as R27				
	R49	Same as R1				
	R50	Same as R1				
	R51	Same as R20				
	R52	Same as R37				
	R53	RESISTOR, Metal Film 51.1 k 1%, 1/8 W	81349	RN60C5112F	106192	1

REPLACEABLE PARTS LIST

TITLE	A3A3, Mod Control PC Assembly 05788201 (Cont'd)					
ITEM	REF	COMPONENT DESCRIPTION	MFR'S CODE	MANUFACTURER'S PART NUMBER	SD STOCK NUMBER	T/Q
	R54	RESISTOR, Metal Film 13.7 k 1%, 1/8 W	81349	RN60C1372F	106208	1
	R55	RESISTOR, Variable 100 k 10%, 3/8 W	73138	89PR100K	103121	1
	R56	RESISTOR, CC 10 MΩ 5%, 1/4 W	01121	CB1065	101564	1
	R57	RESISTOR, CC 47 kΩ 5%, 1/4 W	01121	CB4735	101574	1
	U1	INTEGRATED CIRCUIT, CMOS Quad 2-Input OR Gate	04713	MC14071BCP	103940	1
	U2	INTEGRATED CIRCUIT Operational Amplifier	27014	LM324N	103198	1
	U3	INTEGRATED CIRCUIT Operational Amplifier	07263	LM747HC	103708	1
	U4	INTEGRATED CIRCUIT Operational Amplifier	27014	LM301AH	025745	1
	U5	INTEGRATED CIRCUIT Operational Amplifier	27014	LF355H	103701	1
	U6	Same as U3				
	U7	RESISTOR NETWORK 4 x 12 k	52542	045008	045008	1
139		TERMINAL, Swage	88245	1280B-1	100496	3

REPLACEABLE PARTS LIST

TITLE A4, Synthesizer Assembly 067898 Rev F (Figure 7-16)

ITEM	REF	COMPONENT DESCRIPTION	MFR'S CODE	MANUFACTURER'S PART NUMBER	SD STOCK NUMBER	T/Q
1		ASSEMBLY, Syn Box Mechanical	52542	055929	055929	1
2		ASSEMBLY, Left Gusset	52542	057438	057438	1
3		ASSEMBLY, Right Gusset	52542	057435	057435	1
4		ASSEMBLY, Bottom Cover	52542	055976	055976	1
5		ASSEMBLY, Top Cover	52542	057402	057402	1
6	A4A15	ASSEMBLY, Motherboard	52542	06738001	06738001	1
7		FINGERSTOCK, RFI	30817	97-55-CD	101053	A/R
8		GASKET, RFI Round	07700	20-51210	103274	A/R
9		HEATSINK	52542	057905	057905	1
10		SCREW, PHMS 2-56 x 1/4	96906	MS51957-3	10062504	1
11		SCREW, PHMS 2-56 x 5/16	96906	MS51957-4	10062505	6
12		SCREW, PHMS 4-40 x 5/16	96906	MS51957-14	10062605	12
13		SCREW, PHMS 6-32 x 1/4	96906	MS51957-26	10063204	4
14		SCREW, PHMS 6-32 x 5/16	96906	MS51957-27	10063205	27
15		SCREW, PHMS 6-32 x 7/16	96906	MS51957-29	10063207	6
16		SCREW, FHMS 6-32 x 5/16	96906	MS24693-C25	10073105	22
17		WASHER, Split No. 2	96906	MS15795-802	100614	6
18		WASHER, Split Lock No. 2	96906	MS35337-77	100661	6
20		WASHER, Split No. 4	96906	MS35338-135	100711	12
21		WASHER, Flat No. 6	96906	MS15795-805	100704	4
22		WASHER, Split No. 6	96906	MS35338-136	100712	59
36		SCREW, PHMS 6-32 x 3/8	96906	MS51957-28	10063206	21
37		GASKET	52542	067375	067375	1
	A4A1	ASSEMBLY, AC Discriminator	52542	05563901	05563901	1
	A4A2	ASSEMBLY, 10 MHz VCO	52542	05566201	05566201	1
	A4A3	ASSEMBLY, DC Discriminator	52542	05537401	05537401	1
	A4A4	ASSEMBLY, Time Base	52542	05395401	05395401	1
	A4A5	ASSEMBLY, Source 2 Std	52542	05362401	05362401	A/R
	A4A5	ASSEMBLY, Option 06/07 Hi Speed Source 2	52542	06700501	06700501	A/R
	A4A6	ASSEMBLY, Source 3	52542	05373501	05373501	1
	A4A8	ASSEMBLY, 400 MHz Reference	52542	05566801	05566801	1
	A4A9	ASSEMBLY, Logic	52542	05567101	05567101	1
	A4A10	ASSEMBLY, Divide-By-N	52542	05567001	05567001	1
	A4A11	ASSEMBLY, Source 4	52542	05372401	05372401	1
	A4A12	ASSEMBLY, Phase Detector	52542	05538501	05538501	1
	A4A13	ASSEMBLY, Source 5	52542	05797001	05797001	1
	A4A14	ASSEMBLY, Amplifier	52542	05392901	05392901	1
	A4A16	ASSEMBLY, Mixer	52542	05547001	05547001	1
	A4A17	ASSEMBLY, Connector	52542	05569301	05569301	1

REPLACEABLE PARTS LIST

TITLE A4A1, AC Discriminator PC Assembly 05563901 Rev F (Figure 7-20)

ITEM	REF	COMPONENT DESCRIPTION	MFR'S CODE	MANUFACTURER'S PART NUMBER	SD STOCK NUMBER	T/Q
		BOARD, PC	52542	055639	055639	1
	C1	CAPACITOR, Ceramic .1 µF +80-20%, 10 V	71590	UK10-104	100120	1
	C2	Not Used				
	C3	CAPACITOR, Ceramic 0.1 µF 20%, 50 V	56289	5C023104X0500C5	100178	4
	C4	Same as C3				
	C5	CAPACITOR, Ceramic .01 µF +80-20%, 100 V	91418	BT0.01P80M20%	100103	10
	C6	CAPACITOR, Tant 22 µF 10%, 15 V	56289	150D226X9015B2	100125	1
	C7	Same as C3				
	C8	Same as C5				
	C9	Same as C5				
	C10	Not Used				
	C11	Same as C5				
	C12	Not Used				
	C13	CAPACITOR, DP Ceramic 47 pF 5%, 100 V	96733	DB44BY470J	11735901	3
	C14	CAPACITOR, Ceramic .001 µF 20%, 1 kV	91418	TYPE B	100076	1
	C15	Same as C13				
	C16	Same as C3				
	C17	CAPACITOR, Variable 9.0-35 pF	72982	538-006D9.0-35	100159	1
	C18	Same as C5				
	C19	Same as C5				
	C20	Not Used				
	C21	CAPACITOR, Tant 1 µF 10%, 35 V	56289	150D105X9035A2	100082	1
	C22	Same as C5				
	C23	Same as C13				
	C24	CAPACITOR, Mylar 1 µF 20%, 100 V	14752	210B1B105	100056	1
	C25	Same as C5				
	C26	Not Used				
	C27	Same as C5				
	C28	CAPACITOR, DP Ceramic 470 pF 5%, 100 V	96733	DB45BY471J	11763701	1
	C29	Same as C5				

REPLACEABLE PARTS LIST

TITLE A4A1, AC Discriminator PC Assembly 05563901 (Cont'd)

ITEM	REF	COMPONENT DESCRIPTION	MFR'S CODE	MANUFACTURER'S PART NUMBER	SD STOCK NUMBER	T/Q
	CR1	DIODE, Variable 22 pF	04713	MV2107	100449	1
	CR2 thru CR4	DIODE, Signal 50 V	03508	1N4151	100385	3
	L1	INDUCTOR, Fixed 100 µH 10%	00213	WEE-WEE-100	101320	1
	L2	INDUCTOR, Fixed 27 µH 5%	00213	RFC-S-27	101308	1
	L3	INDUCTOR, Fixed 2.7 µH 10%	00213	WEE-2.7	101299	1
	Q1	TRANSISTOR, SINPN 30 V	07263	PN3643-5	101358	1
	Q2	TRANSISTOR, SINPN 40 V	04713	2N3906	101378	1
	Q3	TRANSISTOR, SINPN 40 V	04713	2N3904	101377	2
	Q4	Same as Q3				
	Q5	TRANSISTOR, SIPNP 60 V	07263	PN3645-18	101367	
	R1	RESISTOR, Variable 2 kΩ 10%, 3/8 W	73138	89PR2K	102119	1
	R2	RESISTOR, Metal Film 2 k 1%, 1/8 W	16299	NA60	106224	1
	R3	RESISTOR, Metal Film 31.6 k 1%, 1/8 W	19701	MF5C-D-3162F	102941	1
	R4	RESISTOR, CC 4.7 kΩ 5%, 1/4 W	01121	CB4725	101598	2
	R5	RESISTOR, CC 1.8 kΩ 5%, 1/4 W	01121	CB1825	101602	1
	R6	RESISTOR, CC 51 Ω 5%, 1/4 W	01121	CB5105	101672	1
	R7	RESISTOR, CC 100 k 5%, 1/4 W	01121	CB1045	101558	2
	R8	RESISTOR, CC 10 k 5%, 1/4 W	01121	CB1035	101570	4
	R9	RESISTOR, CC 2.7 k 5%, 1/4 W	01121	CB2725	101599	1
	R10	RESISTOR, CC 2.2 kΩ 5%, 1/4 W	01121	CB2225	101562	1
	R11	RESISTOR, CC 120 k 5%, 1/4 W	01121	CB1245	101580	1
	R12	RESISTOR, CC 10 MΩ 5%, 1/4 W	01121	CB1065	101564	3
	R13	Same as R4				
	R14	Same as R12				
	R15	RESISTOR, CC 1 k 5%, 1/4 W	01121	CB1025	101569	3

REPLACEABLE PARTS LIST

TITLE	A4A1, AC Discriminator PC Assembly 05563901 (Cont'd)				
ITEM	REF	COMPONENT DESCRIPTION	MFR'S CODE	MANUFACTURER'S PART NUMBER	SD STOCK NUMBER	T/Q
	R16	RESISTOR, CC 33 kΩ 5%, 1/4 W	01121	CB3335	101576	1
	R17	Not Used				
	R18	RESISTOR, Variable 10 k 10%, 3/8 W	73138	89PR10K	102472	1
	R19	Not Used				
	R20	Same as R7				
	R21	Not Used				
	R22	RESISTOR, CC 27 kΩ 5%, 1/4 W	01121	CB2735	101587	2
	R23	Same as R22				
	R24	Same as R12				
	R25	Same as R15				
	R26	Same as R8				
	R27	RESISTOR, CC 47 kΩ 5%, 1/4 W	01121	CB4735	101574	1
	R28	Same as R15				
	R29	Same as R8				
	R30	Same as R8				
	TP1 thru TP5	TERMINAL, Swage	88245	1280B-1	100496	5
	U1	INTEGRATED CIRCUIT, CMOS 4-Bi Lateral Switch	04713	MC14016CP	103323	1
	U2	INTEGRATED CIRCUIT Operational Amplifier	27014	LM301AH	025745	1
	U3	INTEGRATED CIRCUIT, MSC Limiter Detector	02735	CA3089E	045261	1
	U4	INTEGRATED CIRCUIT Operational Amplifier	02735	CA3130T	103231	2
	U5	Same as U4				

REPLACEABLE PARTS LIST

TITLE A4A2, 10 MHz VCO PC Assembly 05566201 Rev H (Figure 7-22)

ITEM	REF	COMPONENT DESCRIPTION	MFR'S CODE	MANUFACTURER'S PART NUMBER	SD STOCK NUMBER	T/Q
		BOARD, PC	52542	055662	055662	1
	C1	CAPACITOR, Ceramic .1 µF +80-20%, 10 V	71590	UK10-104	100120	3
	C2	Same as C1				
	C3	CAPACITOR, Ceramic 0.1 µF 20%, 50 V	56289	5C023104X0500C5	100178	3
	C4	Same as C3				
	C5	Not Used				
	C6	Same as C3				
	C7	CAPACITOR, DP Ceramic 1000 pF 5%, 100 V	96733	DB45BY102J	11763901	1
	C8	CAPACITOR, DP Ceramic 33 pF 5%, 100 V	96733	DB44BY330J	11747101	2
	C9	CAPACITOR, Ceramic .01 µF +80-20%, 100 V	91418	BT0.01P80M20%	100103	19
	C10	Same as C9				
	C11	CAPACITOR, Tant 22 µF 10%, 15 V	56289	150D226X9015B2	100125	1
	C12	Same as C9				
	C13	Same as C9				
	C14	CAPACITOR, DP Ceramic 120 pF 5%, 100 V	96733	DB44BY121J	11762901	1
	C15	CAPACITOR, DP Ceramic 56 pF 5%, 100 V	96733	DB44BY560J	11762501	1
	C16	CAPACITOR, Ceramic 0.001 µF 20%, 50 V	71590	CW15C102M	100251	9
	C17	CAPACITOR, Ceramic .001 µF 20%, 1 kV	91418	TYPE B	100076	4
	C18	Same as C17				
	C19	Same as C1				
	C20	CAPACITOR, Tant 1 µF 10%, 35 V	56289	150D105X9035A2	100082	1
	C21	Same as C9				
	C22	Same as C16				
	C23	Same as C16				
	C24	Same as C9				
	C25	Same as C16				
	C26	Same as C9				
	C27	Same as C9				
	C28	Same as C9				

REPLACEABLE PARTS LIST

TITLE A4A2, 10 MHz VCO PC Assembly 05566201 (Cont'd)

ITEM	REF	COMPONENT DESCRIPTION	MFR'S CODE	MANUFACTURER'S PART NUMBER	SD STOCK NUMBER	T/Q
	C29	Same as C16				
	C30	Same as C9				
	C31	Same as C16				
	C32	Same as C9				
	C33	Same as C17				
	C34	Same as C9				
	C35	Same as C9				
	C36	Same as C9				
	C37	Same as C17				
	C38	Same as C9				
	C39	Same as C16				
	C40	Same as C9				
	C41	Same as C9				
	C42	Same as C9				
	C43	Same as C16				
	C44	Same as C16				
	C45	CAPACITOR, Variable 15-60 pF, 200 V	72982	538-006F15-60	106502	1
	C46	Same as C9				
	C47	Not Used				
	C48	Not Used				
	C49	Same as C8				
	CR1	DIODE, Signal 50 V	03508	1N4151	100385	13
	CR2	Same as CR1				
	CR3	Same as CR1				
	CR4	DIODE, Variable 22 pF	04713	MV2107	100449	1
	CR5 thru CR14	Same as CR1				
	L1	INDUCTOR, Fixed 100 µH 10%	00213	WEE-WEE-100	101320	8
	L2	INDUCTOR, Fixed 6.8 µH 10%	00213	WEE-6.8	101300	1
	L3	Not Used				
	L4	Same as L1				
	L5	Not Used				
	L6 thru L11	Same as L1				
	Q1	TRANSISTOR, SINPN 40 V	04713	2N3904	101377	8
	Q2	TRANSISTOR, SINPN 40 V	04713	2N3906	101378	1

REPLACEABLE PARTS LIST

TITLE	A4A2, 10 MHz VCO PC Assembly 05566201 (Cont'd)					
ITEM	REF	COMPONENT DESCRIPTION	MFR'S CODE	MANUFACTURER'S PART NUMBER	SD STOCK NUMBER	T/Q
	Q3 Q4 thru Q10	TRANSISTOR, MOSFET N-Channel Same as Q1	04713	MFE121	101413	1
	Q11	TRANSISTOR, JFET N-Channel	81349	2N4091	101409	1
	R1	RESISTOR, CC 10 k 5%, 1/4 W	01121	CB1035	101570	4
	R2	RESISTOR, CC 27 kΩ 5%, 1/4 W	01121	CB2735	101587	2
	R3	Same as R2				
	R4	RESISTOR, CC 220 Ω 5%, 1/4 W	01121	CB2215	101566	3
	R5	RESISTOR, Metal Film 31.6 k 1%, 1/8 W	19701	MF5C-D-3162F	102941	1
	R6	Not Used				
	R7	Not Used				
	R8	Not Used				
	R9	RESISTOR, MF 20.0 k 1%, 1/8 W	81349	RN60D2002F	106315	1
	R10	RESISTOR, CC 120 k 5%, 1/4 W	01121	CB1245	101580	2
	R11	Same as R10				
	R12	RESISTOR, CC 12 k 5%, 1/4 W	01121	CB1235	101565	1
	R13	RESISTOR, CC 220 k 5%, 1/4 W	01121	CB2235	101610	1
	R14	RESISTOR, CC 100 k 5%, 1/4 W	01121	CB1045	101558	1
	R15	Same as R1				
	R16	RESISTOR, CC 22 k 5%, 1/4 W	01121	CB2235	101572	1
	R17	RESISTOR, CC 100 Ω 5%, 1/4 W	01121	CB1015	101609	10
	R18	Not Used				
	R19	RESISTOR, CC 1 k 5%, 1/4 W	01121	CB1025	101569	13
	R20	Same as R19				
	R21	RESISTOR, CC 1.8 kΩ 5%, 1/4 W	01121	CB1825	101602	1
	R22	RESISTOR, CC 3.3 k 5%, 1/4 W	01121	CB3325	101559	2

REPLACEABLE PARTS LIST

TITLE A4A2, 10 MHz VCO PC Assembly 05566201 (Cont'd)

ITEM	REF	COMPONENT DESCRIPTION	MFR'S CODE	MANUFACTURER'S PART NUMBER	SD STOCK NUMBER	T/Q
	R23	Same as R19				
	R24	Same as R19				
	R25	Same as R19				
	R26	RESISTOR, CC 51 Ω 5%, 1/4 W	01121	CB5105	101672	1
	R27	Same as R19				
	R28	Same as R19				
	R29	Same as R22				
	R30	Same as R4				
	R31	Same as R17				
	R32	Same as R19				
	R33	RESISTOR, CC 270 Ω 5%, 1/4 W	01121	CB2715	101542	5
	R34	Same as R4				
	R35	Same as R17				
	R36	Same as R17				
	R37	Same as R19				
	R38	Same as R17				
	R39	RESISTOR, CC 2.2 kΩ 5%, 1/4 W	01121	CB2225	101562	3
	R40	Same as R33				
	R41	Same as R33				
	R42	Same as R33				
	R43	Same as R17				
	R44	Same as R39				
	R45	Same as R33				
	R46	Same as R19				
	R47	Same as R19				
	R48	RESISTOR, CC 56 Ω 5%, 1/4 W	01121	CB5605	101735	1
	R49 thru R52	Same as R17				
	R53	Same as R39				
	R54	RESISTOR, CC 470 Ω 5%, 1/4 W	01121	CB4715	101625	1
	R55	RESISTOR, MF 10.0 k 1%, 1/8 W	19701	MF5C-D-1002-F	102098	2
	R56	Same as R55				
	R57	Same as R1				
	R58	RESISTOR, CC 22 M 5%, 1/4 W	01121	CB2265	101628	1

REPLACEABLE PARTS LIST

TITLE A4A2, 10 MHz VCO PC Assembly 05566201 (Cont'd)

ITEM	REF	COMPONENT DESCRIPTION	MFR'S CODE	MANUFACTURER'S PART NUMBER	SD STOCK NUMBER	T/Q
	R59	RESISTOR, CC 15 Ω 5%, 1/4 W	01121	CB1505	101764	1
	R60	RESISTOR, CC 10 Ω 5%, 1/4 W	01121	CB1005	101557	1
	R61	Same as R19				
	R62	RESISTOR, CC 2.2 M 5%, 1/4 W	01121	CB2225	101618	1
	R63	RESISTOR, Variable 50 k 10%, 3/8 W	73138	89PR50K	102153	1
	R64	Same as R19				
	R65	Same as R1				
	R66	RESISTOR, CC 10 k 5%, 1/8 W	01121	BB1035	101697	1
	TP1	TERMINAL, Swage	88245	1280B-1	100496	2
	TP2	Same as TP1				
	U1	INTEGRATED CIRCUIT Operational Amplifier	27014	LM201AH	025758	2
	U2	Same as U1				
	U3	INTEGRATED CIRCUIT Linear Amplifier	02735	CA3076	025770	2
	U4	Same as U3				

REPLACEABLE PARTS LIST

TITLE	A4A3, DC Discriminator PC Assembly 05537401 Rev J (Figure 7-24)				
ITEM	REF	COMPONENT DESCRIPTION	MFR'S CODE	MANUFACTURER'S PART NUMBER	SD STOCK NUMBER	T/Q
		BOARD, PC	52542	055374	055374	1
	C1	CAPACITOR, Tant 1 µF 10%, 35 V	56289	150D105X9035A2	100082	4
	C2	Not Used				
	C3	CAPACITOR, Ceramic .01 µF +80-20%, 100 V	91418	BT0.01P80M20%	100103	13
	C4	CAPACITOR, Ceramic 0.1 µF 20%, 50 V	56289	5C023104X0500C5	100178	7
	C5	CAPACITOR, DP Ceramic 47 pF 5%, 100 V	96733	DB44BY470J	11735901	5
	C6	Same as C3				
	C7	CAPACITOR, Mylar 1 µF 20%, 100 V	14752	210B1B105	100056	3
	C8	Same as C4				
	C9	Same as C5				
	C10	Not Used				
	C11	Same as C3				
	C12	Same as C3				
	C13	Same as C4				
	C14	CAPACITOR, Ceramic .001 µF 20%, 1 kV	91418	TYPE B	100076	1
	C15	CAPACITOR, Tant 22 µF 10%, 15 V	56289	150D226X9015B2	100125	1
	C16	Same as C3				
	C17	Same as C3				
	C18	Same as C4				
	C19	Same as C4				
	C20	Same as C3				
	C21	Same as C4				
	C22	Same as C4				
	C23	CAPACITOR, Ceramic 0.001 µF 20%, 50 V	71590	CW15C102M	100251	1
	C24	Same as C5				
	C25	CAPACITOR, Variable 9.0-35 pF	72982	538-006D9.0-35	100159	1
	C26	Same as C3				
	C27	CAPACITOR, Ceramic 1 µF 20%, 50 V	56289	5CZ5U105X0050C5	100176	1
	C28	Same as C5				
	C29	Same as C1				
	C30	Same as C3				

REPLACEABLE PARTS LIST

TITLE A4A3, DC Discriminator PC Assembly 05537401 (Cont'd)

ITEM	REF	COMPONENT DESCRIPTION	MFR'S CODE	MANUFACTURER'S PART NUMBER	SD STOCK NUMBER	T/Q
	C31	Same as C3				
	C32	Same as C5				
	C33	Same as C7				
	C34	Same as C7				
	C35	CAPACITOR, DP Ceramic 33 pF 5%, 100 V	96733	DB44BY330J	11747101	1
	C36	Same as C3				
	C37	Same as C3				
	C38	CAPACITOR, Tant 39 µF 10%, 10 V	56289	150D396X9010B2	100183	2
	C39	CAPACITOR, Ceramic .1 µF +80-20%, 10 V	71590	UK10-104	100120	2
	C40	Same as C38				
	C41	Same as C39				
	C42	Same as C1				
	C43	Same as C1				
	C44	Same as C3				
	C45	CAPACITOR, DP Ceramic 470 pF 5%, 100 V	96733	DB45BY471J	11763701	1
	CR1	DIODE, Signal 50 V	03508	1N4151	100385	5
	CR2	Same as CR1				
	CR3	Same as CR1				
	CR4	DIODE, Variable 22 pF	04713	MV2107	100449	1
	CR5	Same as CR1				
	CR6	Same as CR1				
	L1 thru L4	INDUCTOR, Fixed 100 µH 10%	00213	WEE-WEE-100	101320	4
	L5	INDUCTOR, Fixed 27 µH 5%	00213	RFC-S-27	101308	1
	L6	INDUCTOR, Fixed 2.7 µH 10%	00213	WEE-WEE-2.7	101327	1
	Q1	TRANSISTOR, SINPN 40 V	04713	2N3904	101377	2
	Q2	TRANSISTOR, SINPN 30 V	07263	PN3643-5	101358	2
	Q3	Same as Q1				
	R1	RESISTOR, CC 10 k 5%, 1/4 W	01121	CB1035	101570	6
	R2	RESISTOR, CC 47 kΩ 5%, 1/4 W	01121	CB4735	101574	2
	R3	Same as R1				

REPLACEABLE PARTS LIST

TITLE A4A3, DC Discriminator 05537401 (Cont'd)

ITEM	REF	COMPONENT DESCRIPTION	MFR'S CODE	MANUFACTURER'S PART NUMBER	SD STOCK NUMBER	T/Q
	R4	Same as R1				
	R5	RESISTOR, CC 100 k 5%, 1/4 W	01121	CB1045	101558	4
	R6	Not Used				
	R7 thru R11	RESISTOR, CC 1 k 5%, 1/4 W	01121	CB1025	101569	8
	R12	RESISTOR, CC 2.2 kΩ 5%, 1/4 W	01121	CB2225	101562	1
	R13	RESISTOR, CC 51 Ω 5%, 1/4 W	01121	CB5105	101672	1
	R14	RESISTOR, CC 470 kΩ 5%, 1/4 W	01121	CB4745	101630	3
	R15	RESISTOR, CC 4.7 kΩ 5%, 1/4 W	01121	CB4725	101598	2
	R16	Same as R14				
	R17	Same as R15				
	R18	RESISTOR, Variable 2 kΩ 10%, 3/8 W	73138	89PR2K	102119	1
	R19	RESISTOR, Metal Film 2 k 1%, 1/8 W	16299	NA60	106224	1
	R20	RESISTOR, Metal Film 31.6 k 1%, 1/8 W	19701	MF5C-D-3162F	102941	1
	R21	RESISTOR, CC 150 Ω 5%, 1/4 W	01121	CB1515	101615	1
	R22	Same as R1				
	R23	Same as R7				
	R24	Same as R5				
	R25	Same as R5				
	R26	Same as R5				
	R27	Same as R1				
	R28	Same as R14				
	R29	RESISTOR, Variable 50 k 10%, 3/8 W	73138	89PR50K	102153	1
	R30	Same as R1				
	R31	RESISTOR, CC 120 k 5%, 1/4 W	01121	CB1245	101580	1
	R32	RESISTOR, CC 270 Ω 5%, 1/4 W	01121	CB2715	101542	1
	R33	Same as R2				
	R34	Same as R7				
	R35	Same as R7				

REPLACEABLE PARTS LIST

TITLE A4A3, DC Discriminator 05537401 (Cont'd)

ITEM	REF	COMPONENT DESCRIPTION	MFR'S CODE	MANUFACTURER'S PART NUMBER	SD STOCK NUMBER	T/Q
	TP1 thru TP6	TERMINAL, Swage	88245	1280B-1	100496	6
	U1	INTEGRATED CIRCUIT, CMOS Decade Counter	04713	MC14017CP	103324	1
	U2	INTEGRATED CIRCUIT, CMOS Quad 2-Input NOR Gate	04713	MC14001BCP	045283	1
	U3	INTEGRATED CIRCUIT Linear Amplifier	02735	CA3026	025724	1
	U4	INTEGRATED CIRCUIT Linear Amplifier	02735	CA3076	025770	1
	U5	INTEGRATED CIRCUIT, MSC Limiter Detector	02735	CA3089E	045261	1
	U6	INTEGRATED CIRCUIT Operational Amplifier	02735	CA3130T	103231	2
	U7	Same as U6				
	U8	INTEGRATED CIRCUIT, CMOS 4-Bi Lateral Switch	04713	MC14016CP	103323	1
	U9	INTEGRATED CIRCUIT Operational Amplifier	27014	LM201AH	025758	1

REPLACEABLE PARTS LIST

TITLE A4A4, Time Base PC Assembly 05395401 Rev F (Figure 7-26)

ITEM	REF	COMPONENT DESCRIPTION	MFR'S CODE	MANUFACTURER'S PART NUMBER	SD STOCK NUMBER	T/Q
		BOARD, PC	52542	053954	053954	1
	C1	CAPACITOR, DP Ceramic .0047 µF 20%, 100 V	04222	3418100C472M	117569	2
	C2	Same as C1				
	C3	CAPACITOR, Ceramic 1 µF 20%, 50 V	56289	5CZ5U105X0050C5	100176	1
	C4	CAPACITOR, Ceramic 0.1 µF 20%, 50 V	56289	5C023104X0500C5	100178	4
	C5	Same as C4				
	C6	CAPACITOR, Tant 1 µF 10%, 35 V	56289	150D105X9035A2	100082	2
	C7	Same as C6				
	C8	CAPACITOR, Ceramic .01 µF +80-20%, 100 V	91418	BT0.01P80M20%	100103	2
	C9	Same as C4				
	C10	Same as C4				
	C11	CAPACITOR, Tant 56 µF 10%, 6 V	56289	150D566X900B2	100225	1
	C12	Same as C8				
	CR1 thru CR9	DIODE, Signal 50 V	03508	1N4151	100385	9
	Q1	TRANSISTOR, SINPN 15 V	07263	MPS3646-18	101369	1
	R1	RESISTOR, CC 100 k 5%, 1/4 W	01121	CB1045	101558	6
	R2	Same as R1				
	R3	RESISTOR, CC 1 k 5%, 1/4 W	01121	CB1025	101569	4
	R4	Same as R3				
	R5	RESISTOR, CC 22 k 5%, 1/4 W	01121	CB2235	101572	2
	R6	RESISTOR, CC 10 k 5%, 1/4 W	01121	CB1035	101570	4
	R7	RESISTOR, CC 4.7 kΩ 5%, 1/4 W	01121	CB4725	101598	3
	R8	Same as R7				
	R9	Same as R7				
	R10	RESISTOR, CC 18 k 5%, 1/4 W	01121	CB1835	101579	1
	R11	Same as R1				

REPLACEABLE PARTS LIST

TITLE A4A4, Time Base PC Assembly 05395401 (Cont'd)

ITEM	REF	COMPONENT DESCRIPTION	MFR'S CODE	MANUFACTURER'S PART NUMBER	SD STOCK NUMBER	T/Q
	R13	Same as R3				
	R14	RESISTOR, CC 2.7 k 5%, 1/4 W	01121	CB2725	101599	1
	R15	Same as R1				
	R16	Same as R6				
	R17	Same as R6				
	R18	Same as R5				
	R19	Same as R1				
	R20	Same as R6				
	R21	Same as R3				
	R22	RESISTOR, CC 33 k 5%, 1/8 W	01121	BB3335	101693	1
	TP1	TERMINAL, Swage	88245	1280B-1	100496	2
	TP2	Same as TP1				
	U1	INTEGRATED CIRCUIT, CMOS Hex Inverter Buffer	04713	MC14049UBCP	103217	3
	U2	INTEGRATED CIRCUIT, CMOS Dual BCD Up Counter	04713	MC145188BCP	103339	2
	U3	Same as U2				
	U4	Same as U1				
	U5	INTEGRATED CIRCUIT, TTL Hex Inverter	01295	SN7404N	025779	2
	U6	INTEGRATED CIRCUIT BCD Decimal Decoder	04713	MC14028BCP	045286	1
	U7	Same as U1				
	U8	Same as U5				
	U9	INTEGRATED CIRCUIT, CMOS Monostable Multiplier	04713	MC14528BCP	045289	1
	U10	INTEGRATED CIRCUIT Operational Amplifier	27014	LM301AH	025745	3
	U11	Same as U10				
	U12	Same as U10				
	VR1	DIODE, Zener 6.2 V	03877	1N753A	100387	1

REPLACEABLE PARTS LIST

TITLE	A4A5, Source 2 PC Assembly 05362401 Rev F (Figure 7-28)				
ITEM	REF	COMPONENT DESCRIPTION	MFR'S CODE	MANUFACTURER'S PART NUMBER	SD STOCK NUMBER	T/Q
		BOARD, PC	52542	053624	053624	1
	C1	CAPACITOR, Ceramic 0.001 µF 20%, 50 V	71590	CW15C102M	100251	2
	C2	CAPACITOR, Tant 10 µF 10%, 20 V	56289	150D106X9020B2	100063	4
	C3	CAPACITOR, Tant 1 µF 10%, 35 V	56289	150D105X9035A2	100082	3
	C4	CAPACITOR, Ceramic .02 µF +60-40%, 150 V	71590	DDM203	100057	2
	C5	CAPACITOR, DP Ceramic 100 pF 5%, 100 V	96733	DB44BY101J	11763801	1
	C6	Same as C2				
	C7	CAPACITOR, Ceramic .01 µF +80-20%, 100 V	91418	BTO.01P80M20%	100103	7
	C8	Same as C7				
	C9	CAPACITOR, Tant 180 µF 10%, 6 V	56289	150D187X9006R2	100207	1
	C10	CAPACITOR, Tant 22 µF 10%, 15 V	56289	150D226X9015B2	100125	2
	C11	CAPACITOR, DP Ceramic 47 pF 5%, 100 V	96733	DB44BY470J	11735901	1
	C12	Same as C3				
	C13	CAPACITOR, Ceramic 0.1 µF 20%, 50 V	56289	5C023104X0500C5	100178	4
	C14	Same as C3				
	C15	Same as C2				
	C16 thru C20	Same as C7				
	C21	Same as C13				
	C22	Same as C10				
	C23	Same as C4				
	C24	Same as C13				
	C25	Same as C13				
	C26	Same as C2				
	C27	Same as C1				
	CR1	DIODE, Varicap 250 pF	50101	KV1701	100452	1
	CR2 thru CR6	DIODE, Signal 50 V	03508	1N4151	100385	5

REPLACEABLE PARTS LIST

TITLE A4A5, Source 2 PC Assembly 05362401 (Cont'd)

ITEM	REF	COMPONENT DESCRIPTION	MFR'S CODE	MANUFACTURER'S PART NUMBER	SD STOCK NUMBER	T/Q
	L1	INDUCTOR, Variable	52542	05399601	05399601	1
	L2	INDUCTOR, Fixed 100 µH 10%	00213	WEE-WEE-100	101320	1
	Q1	TRANSISTOR, MOSFET N-Channel	04713	MFE121	101413	1
	Q2	TRANSISTOR, SINPN 15 V	07263	MPS3646-18	101369	1
	R1	RESISTOR, CC 33 kΩ 5%, 1/4 W	01121	CB3335	101576	1
	R2	RESISTOR, CC 100 k 5%, 1/4 W	01121	CB1045	101558	2
	R3	RESISTOR, CC 100 Ω 5%, 1/4 W	01121	CB1015	101609	2
	R4	RESISTOR, CC 1 k 5%, 1/4 W	01121	CB1025	101569	5
	R5	Same as R4				
	R6	RESISTOR, CC 470 Ω 5%, 1/4 W	01121	CB4715	101625	1
	R7	RESISTOR, CC 10 k 5%, 1/4 W	01121	CB1035	101570	3
	R8	RESISTOR, CC 4.7 kΩ 5%, 1/4 W	01121	CB4725	101598	2
	R9	Same as R3				
	R10	Same as R4				
	R11	Same as R4				
	R12	Same as R7				
	R13	Same as R8				
	R14	Same as R4				
	R15	Same as R7				
	R16	RESISTOR, CC 3.3 k 5%, 1/4 W	01121	CB3325	101559	1
	R17	RESISTOR, CC 47 kΩ 5%, 1/4 W	01121	CB4735	101574	1
	R18	RESISTOR, CC 820 k 5%, 1/4 W	01121	CB8245	101850	1
	R19	RESISTOR, Variable 50 k 10%, 3/8 W	73138	89PR50K	102153	1
	TP1 thru TP3	TERMINAL, Swage	88245	1280B-1	100496	3
	U1	INTEGRATED CIRCUIT, TTL MSI Presettable Decade Ctr/Latch	01295	SN74196N	025784	3
	U2	Not Used				

REPLACEABLE PARTS LIST

TITLE A4A5, Source 2 PC Assembly 05362401 (Cont'd)						
ITEM	REF	COMPONENT DESCRIPTION	MFR'S CODE	MANUFACTURER'S PART NUMBER	SD STOCK NUMBER	T/Q
	U3	INTEGRATED CIRCUIT, TTL MSI Counter Control Logic	04173	MC12014L	045263	1
	U4	INTEGRATED CIRCUIT, TTL MSI Programmable 1/N Deocder	04713	MC4016P	045237	5
	U5	INTEGRATED CIRCUIT, TTL MSI Quad Latch	01295	SN74LS75N	103133	4
	U6	Same as U4				
	U7	Same as U5				
	U8	Same as U4				
	U9	Same as U5				
	U10	INTEGRATED CIRCUIT, TTL MSI Phase Frequency Detector	07263	11CV44DC	116916	1
	U11	Same as U4				
	U12	Same as U4				
	U13	Same as U5				
	U14	INTEGRATED CIRCUIT Operational Amplifier	02735	CA3130T	103231	1
	XU3	SOCKET, IC 16-pin	82647	C8816-01	117041	6
	XU4	Same as XU3				
	XU6	Same as XU3				
	XU8	Same as XU3				
	XU10	SOCKET, IC 14-pin	82647	C8814-01	117040	1
	XU11	Same as XU3				
	XU12	Same as XU3				

REPLACEABLE PARTS LIST

TITLE A4A6, Source 3 PC Assembly 05373501 Rev G (Figure 7-30)

ITEM	REF	COMPONENT DESCRIPTION	MFR'S CODE	MANUFACTURER'S PART NUMBER	SD STOCK NUMBER	T/Q
		BOARD, PC	52542	053735	053735	1
	C1	CAPACITOR, Tant 10 µF 10%, 20 V	56289	150D106X9020B2	100063	
	C2	CAPACITOR, Ceramic 0.001 µF 20%, 50 V	71590	CW15C102M	100251	8
	C3	Same as C2				
	C4	Same as C2				
	C5	CAPACITOR, DP Ceramic 100 pF 5%, 100 V	96733	DB44BY101J	11763801	2
	C6	Same as C1				
	C7	Same as C2				
	C8	Factory Selected				
	C9	Same as C2				
	C10	CAPACITOR, Ceramic .01 µF +80-20%, 100 V	91418	BT0.01P80M20%	100103	9
	C11	Same as C10				
	C12	Same as C10				
	C13	CAPACITOR, DP Ceramic 220 pF 5%, 100 V	96733	DB44BY221J	11763301	1
	C14	CAPACITOR, DP Ceramic 330 pF 5%, 100 V	96733	DB45BY331J	11763601	1
	C15	CAPACITOR, DP Ceramic 270 pF 5%, 100 V	96733	DB45BY271J	11763501	2
	C16	Same as C10				
	C17	CAPACITOR, Ceramic 0.1 µF 20%, 50 V	56289	5C023104X0500C5	100178	8
	C18	CAPACITOR, DP Ceramic 180 pF 5%, 100 V	96733	DB44BY181J	11763101	2
	C19	Same as C15				
	C20	Same as C18				
	C21	Same as C10				
	C22	Same as C17				
	C23	CAPACITOR, Tant 1 µF 10%, 35 V	56289	150D105X9035A2	100082	4
	C24	CAPACITOR, Tant 56 µF 10%, 6 V	56289	150D566X900B2	100225	1
	C25	Same as C23				
	C26	Not Used				
	C27	Same as C23				
	C28	CAPACITOR, Ceramic 1 µF 20%, 50 V	56289	5CZ5U105X0050C5	100176	2

REPLACEABLE PARTS LIST

TITLE A4A6, Source 3 PC Assembly 05373501 (Cont'd)

ITEM	REF	COMPONENT DESCRIPTION	MFR'S CODE	MANUFACTURER'S PART NUMBER	SD STOCK NUMBER	T/Q
	C29	Same as C28				
	C30	Not Used				
	C31	CAPACITOR, DP Ceramic 47 pF 5%, 100 V	96733	DB44BY470J	11735901	1
	C32	Same as C10				
	C33	Not Used				
	C34 thru C36	Same as C17				
	C37	Same as C5				
	C38	Same as C10				
	C39 thru C41	Same as C17				
	C42 thru C44	Same as C2				
	C45	Same as C23				
	C46	Same as C10				
	C47	Same as C10				
	CR1	DIODE, Variable 82 pF	04713	MV2114	100438	1
	CR2 thru CR10	DIODE, Signal 50 V	03508	1N4151	100385	9
	L1	INDUCTOR, Fixed 10 µH 10%	00213	WEE-WEE-10	101317	2
	L2	INDUCTOR, Variable	52542	05399601	05399601	1
	L3	INDUCTOR, Fixed 100 µH 5%	00213	WEE-100	101306	1
	L4	INDUCTOR, Fixed .47 µH 5%	00213	WEE-WEE-0.47	101318	2
	L5	Same as L4				
	L6	INDUCTOR, Fixed 39 µH 10%	99800	2150-38	101296	2
	L7	Same as L6				
	L8	INDUCTOR, Fixed 1000 µH 5%	00213	WEE-1000	101303	1
	L9	Same as L1				
	Q1	TRANSISTOR, MOSFET N-Channel	04713	MFE121	101413	1
	Q2	TRANSISTOR, SINPN 40 V	07263	PN3640-18	101357	1
	Q3	TRANSISTOR, SINPN 15 V	07263	MPS3646-18	101369	2
	Q4	TRANSISTOR, SINPN 40 V	04713	2N3904	101377	1
	Q5	Same as Q3				
	Q6	TRANSISTOR, SINPN 40 V	04713	2N3906	101378	1

REPLACEABLE PARTS LIST

TITLE A4A6, Source 3 PC Assembly 05373501 (Cont'd)

ITEM	REF	COMPONENT DESCRIPTION	MFR'S CODE	MANUFACTURER'S PART NUMBER	SD STOCK NUMBER	T/Q
	R1	RESISTOR, CC 33 kΩ 5%, 1/4 W	01121	CB3335	101576	1
	R2	RESISTOR, CC 100 Ω 5%, 1/4 W	01121	CB1015	101609	4
	R3	RESISTOR, CC 100 k 5%, 1/4 W	01121	CB1045	101558	3
	R4	RESISTOR, CC 1 k 5%, 1/4 W	01121	CB1025	101569	8
	R5	Same as R4				
	R6	Same as R2				
	R7	RESISTOR, CC 56 Ω 5%, 1/4 W	01121	CB5605	101735	3
	R8	Same as R7				
	R9	RESISTOR, CC 10 k 5%, 1/4 W	01121	CB1035	101570	5
	R10	Same as R9				
	R11	RESISTOR, CC 3.3 k 5%, 1/4 W	01121	CB3325	101559	1
	R12	RESISTOR, CC 1.2 k 5%, 1/4 W	01121	CB1225	101581	1
	R13	RESISTOR, CC 470 Ω 5%, 1/4 W	01121	CB4715	101625	3
	R14	Same as R2				
	R15	Same as R7				
	R16	Same as R9				
	R17	RESISTOR, CC 4.7 kΩ 5%, 1/4 W	01121	CB4725	101598	6
	R18	Same as R13				
	R19	RESISTOR, CC 1.5 kΩ 5%, 1/4 W	01121	CB1525	101577	1
	R20	Same as R13				
	R21	Same as R9				
	R22	RESISTOR, CC 220 Ω 5%, 1/4 W	01121	CB2215	101566	2
	R23	RESISTOR, CC 2.7 k 5%, 1/4 W	01121	CB2725	101599	2
	R24	RESISTOR, CC 22 k 5%, 1/4 W	01121	CB2235	101572	1
	R25 thru R28	Same as R17				

REPLACEABLE PARTS LIST

TITLE A4A6, Source 3 PC Assembly 05373501 (Cont'd)

ITEM	REF	COMPONENT DESCRIPTION	MFR'S CODE	MANUFACTURER'S PART NUMBER	SD STOCK NUMBER	T/Q
	R29	Same as R2				
	R30 thru R33	Same as R4				
	R34	Same as R17				
	R35	Same as R22				
	R36	Same as R3				
	R37	Same as R4				
	R38	Same as R3				
	R39	Same as R23				
	R40	RESISTOR, CC 270 Ω 5%, 1/4 W	01121	CB2715	101542	2
	R41	Same as R40				
	R42	Same as R4				
	R43	Same as R9				
	R44	RESISTOR, CC 39 k 5%, 1/4 W	01121	CB3935	101561	1
	TP1 thru TP4	TERMINAL, Swage	88245	1280B-1	100496	4
	U1	INTEGRATED CIRCUIT Linear Amplifier	02735	CA3026	025724	1
	U2	INTEGRATED CIRCUIT, LIN MSC Bal Mixer 100 MHz	01295	TL442	117897	1
	U3	INTEGRATED CIRCUIT Phase Frequency Detector	04713	MC12040L	045277	1
	U4	INTEGRATED CIRCUIT Operational Amplifier	02735	CA3130T	103231	1
	U5	INTEGRATED CIRCUIT Operational Amplifier	27014	LM301AH	025745	1

REPLACEABLE PARTS LIST

TITLE	A4A8, 400 MHz Reference PC Assembly 05566801 Rev N (Figure 7-32)				
ITEM	REF	COMPONENT DESCRIPTION	MFR'S CODE	MANUFACTURER'S PART NUMBER	SD STOCK NUMBER	T/Q
		BOARD, PC	52542	055668	055668	1
	C1	CAPACITOR, Ceramic 0.1 µF 20%, 50 V	56289	5C023104X0500C5	100178	2
	C2	CAPACITOR, Tant 1 µF 10%, 35 V	56289	150D105X9035A2	100082	2
	C3 thru C7	CAPACITOR, Ceramic 0.001 µF 20%, 50 V	71590	CW15C102M	100251	10
	C8	CAPACITOR, Ceramic 10 pF 1 kV	72982	831-000C0G0100D	100282	3
	C9	CAPACITOR, Ceramic 15 pF 1 kV	56289	10TCC-015	100355	1
	C10	Same as C8				
	C11	CAPACITOR, Ceramic 100 pF 10%, 100 V	32159	WM11BY101K	102856	1
	C12	CAPACITOR, Tant 10 µF 10%, 20 V	56289	150D106X9020B2	100063	2
	C13	CAPACITOR, Ceramic .01 µF +80-20%, 100 V	91418	BT0.01P80M20%	100103	2
	C14	CAPACITOR, DP Ceramic 0.01 µF 20%, 100 V	04222	3429100C103M	117570	1
	C15	Same as C3				
	C16	Same as C13				
	C17	CAPACITOR, DP Ceramic 33 pF 5%, 100 V	96733	DB44BY330J	11747101	1
	C18	CAPACITOR, DP Ceramic 1000 pF 5%, 100 V	96733	DB45BY102J	11763901	2
	C19	Same as C2				
	C20	Same as C18				
	C21	CAPACITOR, DP Ceramic 10 pF 5%, 100 V	96733	DB44BY100J	11762101	1
	C22	Same as C8				
	C23	Same as C3				
	C24	CAPACITOR, Tant 4.7 µF 10%, 10 V	56289	150D475X9010A2	100205	1
	C25	CAPACITOR, DP Ceramic 47 pF 5%, 100 V	96733	DB44BY470J	11735901	1
	C26	Same as C12				
	C27	CAPACITOR, DP Ceramic 56 pF 5%, 100 V	96733	DB44BY560J	11762501	1

REPLACEABLE PARTS LIST

TITLE A4A8, 400 MHz Reference PC Assembly 05566801 (Cont'd)

ITEM	REF	COMPONENT DESCRIPTION	MFR'S CODE	MANUFACTURER'S PART NUMBER	SD STOCK NUMBER	T/Q
	C28	Same as C1				
	C29 thru C31	Same as C3				
	C32	CAPACITOR, Ceramic 1 µF 20%, 50 V	56289	5CZ5U105X0050C5	100176	1
	C33	CAPACITOR, Chip 0.056 µF 20%, 100 V	96733	SB31BX563MP	100257	3
	C34	Same as C33				
	C35	Same as C33				
	C36	CAPACITOR, Ceramic 2.2 pF 10%, 100 V	56289	10TCCV22	103930	1
	CR1	DIODE, Variable	04713	SMV1266	100453	1
	CR2	DIODE, Pin	28480	5082-3188	103338	2
	CR3	Same as CR2				
	CR4	DIODE, Signal 50 V	03508	1N4151	100385	2
	CR5	Same as CR4				
	CR6	DIODE, Signal 70 V	28480	5082-2800	100442	2
	CR7	Same as CR6				
	J1	RECEPTICAL, RF	98291	51-053-0000	103173	1
	L1	INDUCTOR	52542	05399506	05399506	1
	L2	INDUCTOR, Fixed 2.7 µH 10%	00213	WEE-2.7	101299	3
	L3	Same as L2				
	L4	INDUCTOR, Fixed 470 µH 5%	00213	WEE-470	101297	1
	L5	LOOP, Wire				
	L6	Same as L5				
	L7	INDUCTOR, Fixed 100 µH 5%	00213	WEE-100	101306	1
	L8	Same as L2				
	Q1	TRANSISTOR, SINPN 30 V	07263	PN3643-5	101358	1
	Q2	TRANSISTOR, MOSFET N-Channel	04713	SPF739	101416	1
	Q3	TRANSISTOR, SINPN 12 V	07263	PN3563-18	102696	1
	Q4	TRANSISTOR, SINPN 40 V	04713	2N3904	101377	1
	Q5	TRANSISTOR, SIPNP 60 V	07263	PN3645-18	101367	1
	R1	RESISTOR, CC 10 k 5%, 1/4 W	01121	CB1035	101570	8
	R2	RESISTOR, CC 56 kΩ 5%, 1/4 W	01121	CB5635	101670	1
	R3	RESISTOR, CC 33 kΩ 5%, 1/4 W	01121	CB3335	101576	1

REPLACEABLE PARTS LIST

TITLE A4A8, 400 MHz Reference PC Assembly 05566801 (Cont'd)

ITEM	REF	COMPONENT DESCRIPTION	MFR'S CODE	MANUFACTURER'S PART NUMBER	SD STOCK NUMBER	T/Q
	R4	RESISTOR, CC 22 Ω 5%, 1/4 W	01121	CB2205	101696	1
	R5	RESISTOR, CC 470 Ω 5%, 1/4 W	01121	CB4715	101625	4
	R6	Same as R1				
	R7	Same as R1				
	R8	Same as R5				
	R9	Same as R5				
	R10	Same as R1				
	R11	Same as R1				
	R12	Same as R1				
	R13	RESISTOR, CC 100 Ω 5%, 1/4 W	01121	CB1015	101609	4
	R14	Same as R13				
	R15	RESISTOR, CC 4.7 kΩ 5%, 1/4 W	01121	CB4725	101598	1
	R16	Same as R5				
	R17	Not Used				
	R18	RESISTOR, CC 470 kΩ 5%, 1/4 W	01121	CB4745	10163001	2
	R19	Same as R1				
	R20	Same as R1				
	R21	Same as R13				
	R22	Same as R18				
	R23	RESISTOR, CC 1 k 5%, 1/4 W	01121	CB1025	101569	6
	R24	RESISTOR, CC 30 Ω 5%, 1/4 W	01121	CB3005	101730	1
	R25	RESISTOR, CC 220 Ω 5%, 1/4 W	01121	CB2215	101566	1
	R26	Same as R13				
	R27 thru R31	Same as R23				
	TP2	TERMINAL, Swage	88245	1280B-1	100496	1
	U1	INTEGRATED CIRCUIT, ECL MSI Divide-by-10/11	07263	11C90DC	103416	1
	U2	INTEGRATED CIRCUIT, TTL SSI Dual J-K Flip-Flop	01295	SN74S112N	025786	1

REPLACEABLE PARTS LIST

TITLE	A4A8, 400 MHz Reference PC Assembly 05566801 (Cont'd)				
ITEM	REF	COMPONENT DESCRIPTION	MFR'S CODE	MANUFACTURER'S PART NUMBER	SD STOCK NUMBER	T/Q
	U3	INTEGRATED CIRCUIT, TTL MSI Decade Counter	01295	SN7490N	025732	1
	U4	INTEGRATED CIRCUIT, TTL MSI Phase Frequency Detector	07263	11CV44DC	116916	1
	U5	INTEGRATED CIRCUIT Operational Amplifier	02735	CA3130T	103231	1
	XU4	SOCKET, IC 14-pin	82647	C8814-01	117040	1
		FINGERSTOCK	52542	055861	055861	1

REPLACEABLE PARTS LIST

TITLE	A4A9, Control Logic PC Assembly 05567101 Rev C (Figure 7-34)				
ITEM	REF	COMPONENT DESCRIPTION	MFR'S CODE	MANUFACTURER'S PART NUMBER	SD STOCK NUMBER	T/Q
		BOARD, PC	52542	055671	055671	
	CR1	DIODE, Signal 50 V	03508	1N4151	100385	1
	Q1 thru Q13	TRANSISTOR, SIPNP	07263	2N4249	102719	13
	R1	RESISTOR, CC 100 k 5%, 1/4 W	01121	CB1045	101558	26
	R2	Same as R1				
	R3	Same as R1				
	R4	RESISTOR, CC 33 kΩ 5%, 1/4 W	01121	CB3335	101576	12
	R5	Same as R1				
	R6	Same as R1				
	R7	Same as R4				
	R8	Same as R1				
	R9	Same as R1				
	R10	Same as R4				
	R11	Same as R1				
	R12	Same as R4				
	R13 thru R17	Same as R1				
	R18	Same as R4				
	R19	Same as R1				
	R20	Same as R4				
	R21	Same as R1				
	R22	Same as R1				
	R23	Same as R1				
	R24	Same as R4				
	R25	Same as R1				
	R26	Same as R4				
	R27	Same as R1				
	R28	Same as R1				
	R29	Same as R4				
	R30 thru R33	Same as R1				
	R34	Same as R4				
	R35	Same as R1				

REPLACEABLE PARTS LIST

TITLE A4A9, Control Logic PC Assembly 05567101 (Cont'd)

ITEM	REF	COMPONENT DESCRIPTION	MFR'S CODE	MANUFACTURER'S PART NUMBER	SD STOCK NUMBER	T/Q
	R36	Same as R1				
	R37	Same as R4				
	R38	Same as R4				
	U1	INTEGRATED CIRCUIT, CMOS NBCD Adder	04713	MC14560BCP	103433	3
	U2	Same as U1				
	U3	Same as U1				
	U4	INTEGRATED CIRCUIT, TTL MSI Quad Latch	01295	SN74LS75N	103133	3
	U5	Same as U4				
	U6	Same as U4				
	U7	INTEGRATED CIRCUIT, TTL Quad 2-Input NOR Gate	04713	MC3002P	025739	1
	U8	INTEGRATED CIRUCIT, TTL SSI QUAD 2-Input AND Gate	01295	SN7408N	103093	2
	U9	Same as U8				
	U10	INTEGRATED CIRCUIT, TTL SSI Quad 2-Input OR Gate	01295	SN7432N	045257	1
	U11	INTEGRATED CIRCUIT, TTL SSI Quad 2-Input NAND Gate	01295	SN7400N	019705	1
	U12	INTEGRATED CIRCUIT, TTL SSI Quad 2-Input Excl OR Gate	04713	MC3021P	025789	1
	U13	INTEGRATED CIRCUIT, TTL MSI BCD-Decimal Decoder	01295	SN7442N	025749	1

REPLACEABLE PARTS LIST

TITLE A4A10, Divide-By-N PC Assembly 05567001 Rev L (Figure 7-36)

ITEM	REF	COMPONENT DESCRIPTION	MFR'S CODE	MANUFACTURER'S PART NUMBER	SD STOCK NUMBER	T/Q
		BOARD, PC	52542	055670	055670	1
	C1	CAPACITOR, Ceramic 0.001 µF 20%, 50 V	71590	CW15C102M	100251	8
	C2	CAPACITOR, Ceramic .01 µF +80-20%, 100 V	91418	BT0.01P80M20%	100103	2
	C3	CAPACITOR, DP Ceramic 10 pF 5%, 100 V	96733	DB44BY100J	11762101	1
	C4	CAPACITOR, Ceramic 1000 pF 5%, 100 V	96733	DB45BY102J	117639	2
	C5	CAPACITOR, Variable 9.0-35 pF	72982	538-006D9.0-35	100159	1
	C6	CAPACITOR, DP Ceramic 33 pF 5%, 100 V	96733	DB44BY330J	11747101	1
	C7	Same as C4				
	C8	CAPACITOR, DP Ceramic 47 pF 5%, 100 V	96733	DB44BY470J	11735901	1
	C9	Same as C2				
	C10 thru C13	Same as C1				
	C14	CAPACITOR, Tant 39 µF 10%, 10 V	56289	150D396X9010B2	100183	2
	C15	Same as C14				
	C16	Same as C1				
	C17	CAPACITOR, Ceramic 0.1 µF 20%, 50 V	56289	5C023104X0500C5	100178	3
	C18	Same as C14				
	C19	Same as C17				
	C20	Same as C1				
	C21	Same as C1				
	C22	CAPACITOR, DP Ceramic 27 pF 5%, 100 V	96733	DB44BY270J	117640	2
	C23	Same as C22				
	CR1 thru CR4	DIODE, Signal 50 V	03508	1N4151	100385	4
	J1	RECEPTICAL, RF	98291	51-053-0000	103173	1
	L1	INDUCTOR, Fixed 1000 µH 5%	00213	WEE-1000	101303	1

REPLACEABLE PARTS LIST

TITLE A4A10, Divide-By-N PC Assembly 05567001 (Cont'd)

ITEM	REF	COMPONENT DESCRIPTION	MFR'S CODE	MANUFACTURER'S PART NUMBER	SD STOCK NUMBER	T/Q
	R1 thru R10	RESISTOR, CC 470 Ω 5%, 1/4 W	01121	CB4715	10162501	12
	R11	RESISTOR, CC 1 kΩ 5%, 1/4 W	01121	CB1025	10156901	4
	R12	Not Used				
	R13	Same as R1				
	R14	RESISTOR, CC 1.5 kΩ 5%, 1/4 W	01121	CB1525	10157701	1
	R15	RESISTOR, CC 470 kΩ 5%, 1/4 W	01121	CB4745	10163001	2
	R16	RESISTOR, CC 10 kΩ 5%, 1/4 W	01121	CB1035	10157001	2
	R17	Same as R16				
	R18	Same as R15				
	R19	RESISTOR, CC 51 Ω 5%, 1/4 W	01121	CB5105	10167201	1
	R20	Same as R1				
	R21	Same as R11				
	R22	RESISTOR, CC 22 Ω 5%, 1/4 W	01121	CB2205	10169601	1
	R23	Same as R11				
	R24	Same as R11				
	TP1 thru TP4	TERMINAL, Swage	88245	1280B-1	100496	4
	U1	INTEGRATED CIRCUIT, ECL MSI Divide-by-10/11	07263	11C90DC	103416	1
	U2	INTEGRATED CIRCUIT, ECL Sync Counter Up/Down	04713	MC10137L	103027	3
	U3	INTEGRATED CIRCUIT, ECL SSI 4-3-3 Input NOR Gate	04713	MC10106P	103168	1
	U4	Same as U2				
	U5	INTEGRATED CIRCUIT, ECL Dual D M-S Flip-Flop	04173	MC10131P	045239	1
	U6	Same as U2				
	U7	INTEGRATED CIRCUIT, TTL SSI Quad 2-Input NAND Gate	01295	SN74S132N	045271	1
	U8	INTEGRATED CIRCUIT, TTL MSI Phase Frequency Detector	07263	11CV44DC	116916	1

REPLACEABLE PARTS LIST

TITLE A4A10, Divide-By-N PC Assembly 05567001 (Cont'd)

ITEM	REF	COMPONENT DESCRIPTION	MFR'S CODE	MANUFACTURER'S PART NUMBER	SD STOCK NUMBER	T/Q
	U9	INTEGRATED CIRCUIT Operational Amplifier	52542	067036	067036	1
	U10	INTEGRATED CIRCUIT, ECL Quad Translator	04713	MC10125L	045226	1
	XU8	SOCKET, IC 14-pin	82647	C8814-01	117040	1
		HEATSINK	13103	6011B	103224	

REPLACEABLE PARTS LIST

TITLE A4A11, Source 4 PC ASSEMBLY 05372401 Rev V (Figure 7-38)

ITEM	REF	COMPONENT DESCRIPTION	MFR'S CODE	MANUFACTURER'S PART NUMBER	SD STOCK NUMBER	T/Q
		BOARD, PC	52542	053724	053724	1
	C1 thru C4	CAPACITOR, DP Cerimac 0.01 μF 20%, 100 V	04222	3429100C103M	117570	11
	C5	CAPACITOR, Tant 39 μF 10% 20 V	56289	150D396X9020R2	102561	1
	C6	CAPACITOR, Tant 100 μF 10%, 20V	56289	150D107X9020S2	100208	1
	C7	CAPACITOR, Ceramic 0.001 μF 20%, 50 V	71590	CW15C102M	100251	4
	C8	Same as C1				
	C9	Same as C1				
	C10	CAPACITOR, DP Ceramic 0.001 μF 10%, 100 V dcw	04222	3418100C102K	117568	1
	C11	CAPACITOR, DP Ceramic 56 pF 5%, 100 V	96733	DB44BY560J	11762501	1
	C12 thru C14	Same as C7				
	C15	CAPACITOR, Tant 3.3 μF 10% 15 V	56289	150D335X9015A2	100204	1
	C16	CAPACITOR, DP Ceramic 220 pF 5%, 100 V	96733	DB44BY221J	11763301	1
	C17 thru C21	Same as C1				
	C22	CAPACITOR, Ceramic 2.2 pF 10%, 100 V	56289	10TCCV22	103930	1
	CR1	DIODE, Varicap 4 V	52673	KV2302A	116906	2
	CR2	Same as CR1				
	CR3 thru CR10	DIODE, Variable	04713	SMV1266	100453	8
	CR11 thru CR16	DIODE, Pin	28480	5082-3188	103338	6
	J1	RECEPTICAL, RF	98291	51-053-0000	103173	2
	J2	Same as J1				
	L1	INDUCTOR, Fxd 10 μH 10%	00213	WEE-WEE-10	101317	1
	L2	Not Used				
	L3	INDUCTOR, 2.2AWG 1-1/2 T	52542	05399501	05399501	6

TITLE A4A11, Source 4 PC Assembly 05372401 (Cont'd)

ITEM	REF	COMPONENT DESCRIPTION	MFR'S CODE	MANUFACTURER'S PART NUMBER	SD STOCK NUMBER	T/Q
	L4	Same as L3				
	L5	INDUCTOR, 2.2 μH 10%	00213	WEE-WEE-2.2	101309	4
	L6	Not Used				
	L7	Same as L3				
	L8	Same as L3				
	L9	Same as L5				
	L10	Not Used				
	L11	Same as L3				
	L12	Same as L3				
	L13	Same as L5				
	L14	Not Used				
	L15	INDUCTOR, 1-1/2 T	52542	05399508	05399508	1
	L16	Same as L5				
	L17	INDUCTOR, 470 μH 10%	00213	WEE-WEE-470	101321	2
	L18	Same as L17				
	Q1	TRANSISTOR, MOSFET N-CH	04713	MFE209	123945	4
	Q2	TRANSISTOR, SINPN 40 V	04713	2N3906	101378	6
	Q3	TRANSISTOR, SINPN 40 V	04713	2N3904	101377	5
	Q4	Same as Q1				
	Q5	Same as Q2				
	Q6	Same as Q3				
	Q7	Same as Q1				
	Q8	Same as Q2				
	Q9	Same as Q3				
	Q10	Same as Q1				
	Q11	Same as Q2				
	Q12	Same as Q3				
	Q13	Same as Q2				
	Q14	Same as Q2				
	Q15	Same as Q3				
	R1	RESISTOR, CC 5.6 kΩ 5%, 1/4 W	01121	CB5625	101584	2
	R2	RESISTOR, CC 3.3 kΩ 5%, 1/4 W	01121	CB3325	101559	2
	R3	RESISTOR, CC 1 kΩ 5%, 1/4 W	01121	CB1025	101569	4
	R4	RESISTOR, CC 4.7 kΩ 5%, 1/4 W	01121	CB4725	101598	5
	R5	RESISTOR, CC 10 Ω 5%, 1/4 W	01121	CB1005	101557	2

REPLACEABLE PARTS LIST

TITLE A4A11, Source 4 PC Assembly 05372401 (Cont'd)

ITEM	REF	COMPONENT DESCRIPTION	MFR'S CODE	MANUFACTURER'S PART NUMBER	SD STOCK NUMBER	T/Q
	R6	RESISTOR, CC 10 k 5%, 1/4 W	01121	CB1035	101570	15
	R7	Same as R6				
	R8	Same as R6				
	R9	RESISTOR, CC 1.2 k 5%, 1/4 W	01121	CB1225	101581	1
	R10	RESISTOR, CC 5.6 k 5%, 1/8 W	01121	BB5625	101715	2
	R11	RESISTOR, CC 3.3 kΩ 5%, 1/8 W	01121	BB3325	101713	2
	R12	Same as R3				
	R13	RESISTOR, CC 10 k 5%, 1/8 W	01121	BB1035	101697	1
	R14	Same as R6				
	R15	Same as R6				
	R16	Same as R1				
	R17	Same as R2				
	R18	Same as R3				
	R19	Same as R6				
	R20	Same as R6				
	R21	Same as R6				
	R22	Same as R10				
	R23	Same as R11				
	R24	Same ss R6				
	R25	Same as R6				
	R26	Same as R5				
	R27	RESISTOR, CC 100 Ω 5%, 1/4 W	01121	CB1015	101609	5
	R28	Same as R4				
	R29	Same as R27				
	R30	Same as R27				
	R31	Same as R4				
	R32	RESISTOR, CC 220 Ω 5%, 1/4 W	01121	CB2215	101566	1
	R33	Same as R27				
	R34	RESISTOR, CC 56 Ω 5%, 1/4 W	01121	CB5605	101735	1
	R35	Same as R4				
	R36	Same as R6				
	R37	Same as R6				
	R38	Same as R6				

REPLACEABLE PARTS LIST

TITLE A4A11, Source 4 PC Assembly 05372401 (Cont'd)

ITEM	REF	COMPONENT DESCRIPTION	MFR'S CODE	MANUFACTURER'S PART NUMBER	SD STOCK NUMBER	T/Q
	R39	Same as R6				
	R40	Same as R6				
	R41	Same as R3				
	R42	Same as R27				
	R43	Same as R4				
	R44	RESISTOR, CC 39 Ω 5%, 1/4 W	01121	CB3905	101733	1
	R45 thru R49	Not Used				
	R50	RESISTOR, CC 43 Ω 5%, 1/4 W	01121	CB4305	101734	1
	R51	RESISTOR, CC 47 Ω 5%, 1/8 W	01121	BB4705	101707	1
	TP1	TERMINAL, Swage	88245	1280B-1	100496	1
	U1	Not Used				
	U2	INTEGRATED CIRCUIT Mixer DBLBAL, 1-1000 MHz	15542	SAM-2	102815	1
	U3	INTEGRATED CIRCUIT RF Amplfier 40-890 MHz	25403	OM335	103012	1
		FINGERSTOCK	52542	055861	055861	1

REPLACEABLE PARTS LIST

TITLE A4A12, Phase Detector PC Assembly 05538501 Rev J (Figure 7-40)

ITEM	REF	COMPONENT DESCRIPTION	MFR'S CODE	MANUFACTURER'S PART NUMBER	SD STOCK NUMBER	T/Q
		BOARD, PC	52542	055385	055365	1
	C1 thru C5	CAPACITOR, Ceramic 0.1 µF 20%, 50 V	56289	5C023104X0500C5	100178	7
	C6 thru C10	CAPACITOR, Ceramic .01 µF +80-20%, 100 V	91418	BT0.01P80M20%	100103	14
	C11	CAPACITOR, DP Ceramic 220 pF 5%, 100 V	96733	DB44BY221J	11763301	2
	C12	CAPACITOR, DP Ceramic 330 pF 5%, 100 V	96733	DB45BY331J	11763601	1
	C13	CAPACITOR, Ceramic 1 µF 20%, 50 V	56289	5CZ5U105X0050C5	100176	2
	C14	Same as C13				
	C15 thru C19	Same as C6				
	C20	Same as C11				
	C21	Same as C6				
	C22	CAPACITOR, DP Ceramic 150 pF 5%, 100 V	96733	DB44BY151J	11763001	1
	C23	CAPACITOR, Tant 1 µF 10%, 35 V	56289	150D105X9035A2	100082	4
	C24	Same as C23				
	C25	Same as C6				
	C26	CAPACITOR, DP Ceramic 470 pF 5%, 100 V	96733	DB45BY471J	11763701	2
	C27	Same as C1				
	C28	Same as C6				
	C29	Same as C23				
	C30	Same as C6				
	C31	Not Used				
	C32	Not Used				
	C33	Not Used				
	C34	Same as C23				
	C35	Same as C26				
	C36	CAPACITOR, Ceramic 0.001 µF 20%, 50 V	71590	CW15C102M	100251	1
	C37	Same as C1				
	C38	CAPACITOR, DP Ceramic 22 pF 5%, 100 V	96733	DB44BY220J	11764101	1

REPLACEABLE PARTS LIST

TITLE A4A12, Phase Detector PC Assembly 05538501 (Cont'd)

ITEM	REF	COMPONENT DESCRIPTION	MFR'S CODE	MANUFACTURER'S PART NUMBER	SD STOCK NUMBER	T/Q
	CR1 thru CR8	DIODE, Signal 50 V	03508	1N4151	100385	8
	L1	INDUCTOR, Fixed .47 µH 5%	00213	WEE-WEE-0.47	101318	2
	L2	Same as L1				
	L3	INDUCTOR, Fixed 6.8 µH 10%	00213	WEE-6.8	101300	1
	L4	INDUCTOR, Fixed 1000 µH 5%	00213	WEE-1000	101303	2
	L5	Same as L4				
	Q1	TRANSISTOR, SINPN 40 V	04713	2N3904	101377	1
	R1	RESISTOR, CC 56 Ω 5%, 1/4 W	01121	CB5605	101735	4
	R2	RESISTOR, CC 100 Ω 5%, 1/4 W	01121	CB1015	101609	5
	R3	Same as R2				
	R4	RESISTOR, CC 100 k 5%, 1/4 W	01121	CB1045	101558	2
	R5	RESISTOR, CC 100 Ω 5%, 1/4 W	01121	CB1015	101609	1
	R6	Same as R2				
	R7	RESISTOR, CC 470 Ω 5%, 1/4 W	01121	CB4715	101625	1
	R8	RESISTOR, CC 1 MΩ 5%, 1/4 W	01121	CB1055	101605	1
	R9	RESISTOR, CC 4.7 kΩ 5%, 1/8 W	01121	BB4725	101792	1
	R10	RESISTOR, CC 1 kΩ 5%, 1/8 W	01121	BB1025	101711	3
	R11	Same as R10				
	R12	Same as R10				
	R13	RESISTOR, CC 4.7 kΩ 5%, 1/4 W	01121	CB4725	101598	3
	R14	Same as R1				
	R15	RESISTOR, CC 10 k 5%, 1/4 W	01121	CB1035	101570	4
	R16	RESISTOR, CC 1 k 5%, 1/4 W	01121	CB1025	101569	1
	R17	RESISTOR, CC 22 kΩ 5%, 1/8 W	01121	BB2235	101797	1
	R18	RESISTOR, CC 22 k 5%, 1/4 W	01121	CB2235	101572	1

REPLACEABLE PARTS LIST

TITLE A4A12, Phase Detector PC Assembly 05538501 (Cont'd)

ITEM	REF	COMPONENT DESCRIPTION	MFR'S CODE	MANUFACTURER'S PART NUMBER	SD STOCK NUMBER	T/Q
	R19	Same as R15				
	R20	RESISTOR, CC 56 kΩ 5%, 1/4 W	01121	CB5635	101670	3
	R21	RESISTOR, Variable 10 k 10%, 3/8 W	73138	89PR10K	102472	2
	R22	Same as R1				
	R23	RESISTOR, CC 270 Ω 5%, 1/4 W	01121	CB2715	101542	1
	R24	Same as R20				
	R25	Same as R20				
	R26	Same as R13				
	R27	Same as R13				
	R28	Same as R2				
	R29	Same as R4				
	R30	RESISTOR, CC 470 Ω 5%, 1/8 W	01121	BB4715	101709	4
	R31	Not Used				
	R32	Not Used				
	R33	Same as R30				
	R34	Same as R30				
	R35	Same as R30				
	R36	Same as R2				
	R37	RESISTOR, CC 6.8 k 5%, 1/4 W	01121	CB6825	101544	1
	R38	Same as R21				
	R39	Same as R1				
	R40	Same as R15				
	R41	Same as R15				
	TP1 thru TP4	TERMINAL, Swage	88245	1280B-1	100496	4
	U1	INTEGRATED CIRCUIT, ECL Linear Amplifier	04713	MC1590G	025788	2
	U2	Same as U1				
	U3	INTEGRATED CIRCUIT, ECL Quad Line Receiver	04713	MC10115L	045254	1
	U4	INTEGRATED CIRCUIT Phase Frequency Detector	04713	MC12040L	045277	1

TITLE A4A12, Phase Detector PC Assembly 05538501 (Cont'd)

ITEM	REF	COMPONENT DESCRIPTION	MFR'S CODE	MANUFACTURER'S PART NUMBER	SD STOCK NUMBER	T/Q
	U5	INTEGRATED CIRCUIT Operational Amplifier	27014	LM301AH	025745	4
	U6	Same as U5				
	U7	Same as U5				
	U8	Same as U5				
	U9	INTEGRATED CIRCUIT Operational Amplifier	02735	CA3130T	103231	

TITLE A4A13, Source 5 PC Assembly 05797001 Rev H (Figure 7-42)

ITEM	REF	COMPONENT DESCRIPTION	MFR'S CODE	MANUFACTURER'S PART NUMBER	SD STOCK NUMBER	T/Q
		BOARD, PC	52542	057970	057970	
	C1	CAPACITOR, Ceramic .01 μF +80-20%, 100 V	72982	DD560B10ZU1032 100V	10010301	1
	C2	CAPACITOR, DM 50 pF 5%, 500 V	72136	DM10EC500JO	102549	1
	C3	CAPACITOR, Ceramic 33 pF 10%, 1 kV	71590	DD-330	100054	3
	C4	CAPACITOR, Ceramic 10 pF 1 kV	72982	831-000C0G0 100D	100282	4
	C5	CAPACITOR, Ceramic 15 pF 1 kV	56289	10TCC-015	100355	6
	C6	Same as C3				
	C7	Same as C5				
	C8	Same as C4				
	C9	CAPACITOR, Ceramic 0.001 μF 20%, 50 V	71590	CW15C102M	100251	12
	C10	Same as C9				
	C11	Same as C5				
	C12	Same as C3				
	C13	Same as C5				
	C14	Same as C5				
	C15	Same as C9				
	C16	Same as C5				
	C17	Same as C4				
	C18 thru C25	Same as C9				
	C26	CAPACITOR, Tant 4.7 μF 10%, 35 V	56289	150D475X9035B2	100071	1
	C27	CAPACITOR, Tant 39 μF 10%, 20 V	56289	150D396X9020R2	102561	2
	C28	CAPACITOR, Chip 5000 pF, 125 V	32159	R-2180Special	100297	4
	C29	Same as C28				
	C30	Same as C28				
	C31	CAPACITOR, Ceramic 0.1 μF 20%, 50 V	56289	5C023104X0500 C5	100178	1
	C32	Same as C9				
	C33	Same as C28				

TITLE A4A13, Source 5 PC Assembly 05797001 (Cont'd)

ITEM	REF	COMPONENT DESCRIPTION	MFR'S CODE	MANUFACTURER'S PART NUMBER	SD STOCK NUMBER	T/Q
	C34	Same as C27				
	C35	CAPACITOR, Ceramic 5 pF ±5%,	72982	831-000-C060-5096	117418	1
	C36	Same as C4				
	CR1	DIODE, Signal 20 V	03508	1N4830	100440	2
	CR2	DIODE, Varicap 4 V	52673	KV2302A	116906	2
	CR3	Same as CR2				
	CR4	DIODE, Pin	28480	5082-3188	103338	8
	CR5	Same as CR4				
	CR6 thru CR11	DIODE, Variable	04713	SMV1266	100453	6
	CR12 thru CR17	Not Used				
	CR18 thru CR23	Same as CR4				
	CR24	DIODE, Pin 50 V	96067	MA47688	100447	2
	CR25	Same as CR24				
	CR26	Same as CR1				
	J1	RECEPTICAL, RF	98291	51-053-0000	103173	2
	J2	Same as J1				
	L1	INDUCTOR, 1-1/2 T	52542	05399501	05399501	4
	L2	Same as L1				
	L3	INDUCTOR, 1-1/2 T	52542	05399509	05399509	2
	L4	Same as L3				
	L5	INDUCTOR, 3-1/2 T	52542	05399503	05399503	1
	L6	Not Used				
	L7	Not Used				
	L8	Same as L1				
	L9	Same as L1				
	L10	Not Used				
	L11	Not Used				
	L12	INDUCTOR, Fxd 0.06 μH	06560	10150-2	101322	6
	L13	Same as L12				
	L14	INDUCTOR, Fxd 0.05 μH	06560	10150-17k	101323	2
	L15	Same as L14				

TITLE A4A13, Source 5 PC Assembly 05797001 (Cont'd)

ITEM	REF	COMPONENT DESCRIPTION	MFR'S CODE	MANUFACTURER'S PART NUMBER	SD STOCK NUMBER	T/Q
	L16	INDUCTOR, Fxd 10 μH 10%	00213	WEE-WEE-10	101317	1
	L17 thru L20	INDUCTOR, Fxd 2.2 μH 10%	00213	WEE-WEE-2.2	101309	7
	L21 thru L24	Same as L12				
	L25 thru L27	Same as L17				
	Q1	TRANSISTOR, MOSFET N-CH	04713	MFE209	123945	3
	Q2	Same as Q1				
	Q3	Same as Q1				
	Q4	Not Used				
	Q5	Not Used				
	Q6 thru Q11	TRANSISTOR, SINPN 40 V	04713	2N3906	101378	6
	Q12	Not Used				
	Q13 thru Q18	TRANSISTOR, SINPN 40 V	04713	2N3904	101377	6
	R1	RESISTOR, CC 33 kΩ 5%, 1/4 W	01121	CB3335	101576	2
	R2	RESISTOR, CC 56 kΩ 5%, 1/8 W	01121	BB5635	101823	3
	R3	RESISTOR, CC 68 Ω 5%, 1/8 W	01121	BB6805	101700	3
	R4	RESISTOR, CC 100 kΩ 5%, 1/8 W	01121	BB1045	101976	1
	R5	Not Used				
	R6	RESISTOR, CC 100 kΩ 5%, 1/4 w	01121	CB1095	101558	2
	R7	Same as R6				
	R8	Same as R2				
	R9	RESISTOR, CC 33 kΩ 5%, 1/8 W	01121	BB3335	101693	1
	R10	RESISTOR, CC 1 kΩ 5%, 1/4 W	01121	CB1025	101569	8
	R11	Same as R3				
	R12	Same as R2				
	R13	Same as R1				

REPLACEABLE PARTS LIST

TITLE A4A13, Source 5 PC Assembly 05797001 (Cont'd)

ITEM	REF	COMPONENT DESCRIPTION	MFR'S CODE	MANUFACTURER'S PART NUMBER	SD STOCK NUMBER	T/Q
	R14	Same as R10				
	R15	Same as R3				
	R16	Same as R10				
	R17	Not Used				
	R18	RESISTOR, CC 680 k 5%, 1/4 W	01121	CB6815	101669	2
	R19	RESISTOR, CC 3.9 k 5%, 1/4 W	01121	CB3925	101601	1
	R20	RESISTOR, CC 470 Ω 5%, 1/4 W	01121	CB4715	101625	2
	R21	Same as R10				
	R22	Same as R10				
	R23	Not Used				
	R24	RESISTOR, CC 2.7 k 5%, 1/4 W	01121	CB2725	101599	3
	R25	Same as R18				
	R26	Same as R24				
	R27	RESISTOR, CC 220 Ω 5%, 1/4 W	01121	CB2215	101566	1
	R28	Same as R10				
	R29	RESISTOR, CC 10 k 5%, 1/4 W	01121	CB1035	101570	7
	R30	Same as R24				
	R31	RESISTOR, CC 56 Ω 5%, 1/4 W	01121	CB5605	101735	1
	R32	RESISTOR, CC 51 Ω 5%, 1/8 W	01121	BB5105	101815	1
	R33 thru R41	RESISTOR, CC 10 k 5%, 1/8 W	01121	BB1035	101697	12
	R42	RESISTOR, CC 1.2 k 5%, 1/4 W	01121	CB1225	101581	3
	R43 thru R45	Same as R53				
	R46	Same as R42				
	R47	Not Used				
	R48 thru R50	Same as R29				

REPLACEABLE PARTS LIST

TITLE A4A13, Source 5 PC Assembly 05797001 (Cont'd)

ITEM	REF	COMPONENT DESCRIPTION	MFR'S CODE	MANUFACTURER'S PART NUMBER	SD STOCK NUMBER	T/Q
	R51	Same as R42				
	R52 thru R54	Same as R29				
	R55	RESISTOR, CC 10 Ω 5%, 1/4 W	01121	CB1005	101557	2
	R56	Same as R10				
	R57	Same as R20				
	R58	Same as R10				
	R59	Same as R55				
	R60	RESISTOR, CC 47 Ω 5%, 1/4 W	01121	CB4705	101560	1
	U1	INTEGRATED CIRCUIT Dual Oscillator Assembly	52542	06704301	06704301	1
	XU1	SOCKET, IC 24-pin	73803	C84-24-02	103845	1
		FINGERSTOCK	52542	055861	055861	3
		BAR, Cable	52542	057826	057826	1

REPLACEABLE PARTS LIST

TITLE A4A14, Amplifier PC Assembly 05392901 Rev DD (Figure 7-44)

ITEM	REF	COMPONENT DESCRIPTION	MFR'S CODE	MANUFACTURER'S PART NUMBER	SD STOCK NUMBER	T/Q
		BOARD, PC	52542	053929	053929	1
	C1	CAPACITOR, Chip 5000 pF, 125 V	32159	R-2180Special	100297	5
	C2	Same as C1				
	C3	Same as C1				
	C4	Factory Select				
	C5	Same as C1				
	C6	CAPACITOR, Tant 1 µF 10%, 35 V	56289	150D105X9035A2	100082	5
	C7	CAPACITOR, DP Ceramic 2 pF 5%, 100 V	96733	DB44BY2R00	11762001	2
	C8	Same as C7				
	C9	CAPACITOR, Ceramic 0.001 µF 20%, 50 V	71590	CW15C102M	100251	4
	C10	Same as C1				
	C11	Same as C9				
	C12	CAPACITOR, Chip 22 pF 5%, 100 V	32159	SC25BY220J	100263	1
	C13	CAPACITOR, DP Ceramic 27 pF 5%, 100 V	96733	DB44BY270J	11764001	2
	C14	Same as C6				
	C15	Not Used				
	C16	CAPACITOR, DM 68 pF 5%, 500 V	72136	DM15ED680J0	100239	1
	C17	Same as C6				
	C18	CAPACITOR, Tant 10 µF 10%, 20 V	56289	150D106X9020B2	100063	1
	C19	Same as C13				
	C20	Not Used				
	C21	Not Used				
	C22	Not Used				
	C23	CAPACITOR, Chip 5.1 pF, 100 V	32159	SC25BY5RID	100270	1
	C24	CAPACITOR, Ceramic 1 µF 20%, 50 V	56289	5CZ5U105X0050C5	100176	1
	C25	CAPACITOR, DP Ceramic 33 pF 5%, 100 V	96733	DB44BY330J	11747101	1
	C26	Same as C6				
	C27	CAPACITOR, Tant 180 µF 10%, 6 V	56289	150D187X9006R2	100207	1

TITLE A4A14, Amplifer PC Assembly 05392901 (Cont'd)

ITEM	REF	COMPONENT DESCRIPTION	MFR'S CODE	MANUFACTURER'S PART NUMBER	SD STOCK NUMBER	T/Q
	C28	Same as C9				
	C29	CAPACITOR, Chip 0.056 µF 20%, 100 V	96733	SB31BX563MP	100257	1
	C30	Same as C9				
	C31	Factory Select				
	C32	Factory Select				
	C33	Factory Select				
	C34	CAPACITOR, DP Ceramic 0.01 µF 20%, 100 V	04222	3429100C103M	117570	1
	C35	Factory Select				
	C36	CAPACITOR, Ceramic .01 µF +80-20%, 100 V	91418	BT0.01P80M20%	100103	2
	C37	CAPACITOR, Tant 330 µF 20%, 6 V	56289	150D337X006S2	100188	1
	C38	Not Used				
	C39	CAPACITOR, Ceramic 10 pF 1 kV	72982	831-000C0G0100D	100282	1
	C40	Not Used				
	C41	Same as C36				
	C42	Not Used				
	C43	Not Used				
	C44	Same as C9				
	C45	CAPACITOR, Chip 100 pF 10%, 100 V	96733	SB133BY101KP	103280	1
	C46	CAPACITOR, DP Ceramic 100 pF 5%, 100 V dcw	96733	DB44BY101J	117628	1
	CR1 thru CR4	DIODE, Pin 50 V	96067	MA47688	100447	5
	CR5	DIODE, Signal 70 V	28480	5082-2800	100442	3
	CR6	DIODE, Rectifier 400 V	02735	1N5395	100413	1
	CR7	Same as CR1				
	CR8	DIODE, Detector	28480	5082-2787	117307	1
	CR9	Same as CR5				
	CR10	Same as CR5				
	CR11 thru CR15	DIODE, Signal 50 V	03508	1N4151	100385	5

REPLACEABLE PARTS LIST

TITLE A4A14, Amplifier PC Assembly 05392901 (Cont'd)

ITEM	REF	COMPONENT DESCRIPTION	MFR'S CODE	MANUFACTURER'S PART NUMBER	SD STOCK NUMBER	T/Q
	J1 thru J4	RECEPTICAL, RF	98291	51-053-0000	103173	4
	K1	ASSEMBLY, Relay	52542	055890	055890	1
	L1	INDUCTOR	52542	05399504	05399504	2
	L2	Same as L1				
	L3	INDUCTOR	52542	05399505	05399505	1
	L4	INDUCTOR, Fixed 2.2 µH 10%	00213	WEE-WEE-2.2	101309	2
	L5	Same as L4				
	L6	INDUCTOR, Fixed 0.06 µH	06560	10150-2	101322	2
	L7	Same as L6				
	L8	INDUCTOR, Fixed 1000 µH 5%	00213	WEE-1000	101303	2
	L9	Same as L8				
	L10	INDUCTOR, Fixed 100 µH 5%	00213	WEE-100	101306	1
	L11	INDUCTOR, Fixed 270 µH	00213	WEE-270	101302	1
	L12	INDUCTOR, Fixed .15 µH	00213	WEE-0.15	101304	1
	Q1	TRANSISTOR, SINPN 40 V	04713	2N3906	101378	3
	Q2	TRANSISTOR, Selected	52542	055000	055000	1
	Q3	TRANSISTOR, SINPN 40 V	04713	2N3904	101377	2
	Q4	Same as Q3				
	Q5	Same as Q1				
	Q6	Same as Q1				
	Q7	TRANSISTOR, SIPNP 12 V	07263	PN4258-18	102675	1
	Q8	TRANSISTOR, SIPNP	04713	2N4959	101391	1
	Q9	TRANSISTOR, SINPN 25 V	25403	BFR95	103335	1
	R1	RESISTOR, CC 33 kΩ 5%, 1/4 W	01121	CB3335	101576	2
	R2	RESISTOR, CC 1.8 kΩ 5%, 1/4 W	01121	CB1825	101602	1
	R3	Same as R1				
	R4	RESISTOR, CC 1.5 kΩ 5%, 1/4 W	01121	CB1525	101577	1
	R5	RESISTOR, CC 4.7 kΩ 5%, 1/4 W	01121	CB4725	101598	1
	R6	RESISTOR, CC 10 k 5%, 1/8 W	01121	BB1035	101697	8
	R7	RESISTOR, CC 1 k 5%, 1/4 W	01121	CB1025	101569	3
	R8	RESISTOR, CC 470 Ω 5%, 1/8 W	01121	BB4715	101709	4

REPLACEABLE PARTS LIST

TITLE	A4A14, Amplifier PC Assembly 05392901 (Cont'd)				
ITEM	REF	COMPONENT DESCRIPTION	MFR'S CODE	MANUFACTURER'S PART NUMBER	SD STOCK NUMBER	T/Q
	R9	RESISTOR, CC 51 Ω 4Ω, 1 W	01121	GB5105	106032	1
	R10	RESISTOR, CC 56 Ω 5%, 1/8 W	01121	BB5605	101816	4
	R11	RESISTOR, CC 33 k 5%, 1/8 W	01121	BB3335	101693	1
	R12	RESISTOR, CC 4.7 kΩ 5%, 1/8 W	01121	BB4725	101792	1
	R13	Same as R7				
	R14	RESISTOR, CC 10 k 5%, 1/4 W	01121	CB1035	101570	1
	R15	Same as R6				
	R16	Same as R6				
	R17	Same as R6				
	R18	RESISTOR, CC 100 k 5%, 1/8 W	01121	BB1045	101976	2
	R19	RESISTOR, CC 22 kΩ 5%, 1/8 W	01121	BB2235	101797	3
	R20	Same as R6				
	R21	Same as R6				
	R22	Same as R18				
	R23	RESISTOR, CC 470 k 5%, 1/8 W	01121	BB4745	101955	1
	R24	RESISTOR, CC 5.6 k 5%, 1/8 W	01121	BB5625	101715	1
	R25	RESISTOR, CC 100 Ω 5%, 1/8 W	01121	BB1015	101701	2
	R26	Same as R25				
	R27	Same as R10				
	R28	RESISTOR, CC 560 k 5%, 1/8 W	01121	BB5645	102015	1
	R29	Same as R6				
	R30	RESISTOR, CC 470 Ω 5%, 1/4 W	01121	CB4715	101625	2
	R31	RESISTOR, CC 56 k 5%, 1/4 W	01121	BB5635	101823	1
	R32	RESISTOR, CC 390 k 5%, 1/8 W	01121	BB3945	11946801	1
	R33	Same as R19				
	R34	Same as R6				
	R35	Same as R30				

REPLACEABLE PARTS LIST

TITLE A4A14, Amplifier PC Assembly 05392901 (Cont'd)

ITEM	REF	COMPONENT DESCRIPTION	MFR'S CODE	MANUFACTURER'S PART NUMBER	SD STOCK NUMBER	T/Q
	R36	Same as R10				
	R37	RESISTOR, CC 22 k 5%, 1/4 W	01121	CB2235	101572	2
	R38	RESISTOR, CC 100 Ω 5%, 1/4 W	01121	CB1015	101609	2
	R39	Same as R38				
	R40	RESISTOR, CC 680 Ω 5%, 1/2 W	01121	EB6815	101475	1
	R41	Same as R7				
	R42	RESISTOR, MF 487 k 1%, 1/8 W	19701	MF5C-D-4870F	102137	1
	R43	RESISTOR, CC 12 Ω 5%, 1/4 W	01121	CB1205	101819	1
	R44	RESISTOR, CC 470 Ω 5%, 2 W	01121	HB4715	101847	1
	R45	Same as R37				
	R46	RESISTOR, CC 56 Ω 5%, 1/4 W	01121	CB5605	101735	1
	R47	RESISTOR, CC 220 Ω 5%, 1/4 W	01121	CB2215	10156601	1
	R48	RESISTOR, Variable 10 k 10%, 3/8 W	73138	89PR10K	102472	1
	R49	RESISTOR, Variable 500 kΩ 10%, 3/8 W	73138	89PR500K	102207	1
	R50	Same as R49				
	R51	Same as R19				
	R52	RESISTOR, CC 68 k 5%, 1/8 W	01121	BB6835	101822	1
	R53	RESISTOR, CC 1 M 5%, 1/8 W	01121	BB1055	101695	1
	R54	Same as R10				
	R55	Same as R8				
	R56	Same as R8				
	R57	Same as R8				
	R58	RESISTOR, CC 270 Ω 5%, 1/8 W	01121	BB2715	101703	1
	TP1	TERMINAL, Swage	88245	1280B-1	100496	1
	U1	INTEGRATED CIRCUIT RF Amplfier 40-890 MHz	25403	OM335	103012	1
	U2	INTEGRATED CIRCUIT Operational Amplifier	27014	LM301AH	025745	3

REPLACEABLE PARTS LIST

TITLE	A4A14, Amplifier PC Assembly 05392901 (Cont'd)				
ITEM	REF	COMPONENT DESCRIPTION	MFR'S CODE	MANUFACTURER'S PART NUMBER	SD STOCK NUMBER	T/Q
	U3	Same as U2				
	U4	INTEGRATED CIRCUIT Mixer DBLBAL, 1-1000 MHz	15542	SAM-2	102815	1
	U5	Same as U2				
	W1	JUMPER, Insulated	55210	L-2007-1	102879	1
		INSULATOR, Transistor	08289	501-000-D	100666	1
		SCREW, PHMS 4-40 x 5/16	96906	MS51957-14	10062605	2
		NUT, Kep 4-40	78189	511-041800-00	100941	2
		FINGERSTOCK	52542	055861	055861	1
		FINGERSTOCK	52542	075587	075587	1
		TERMINAL, Swage	88245	1309B-1	100508	3

REPLACEABLE PARTS LIST

TITLE	A4A15, Synthesizer Motherboard Assembly 06738001 Rev K (Figure 7-18)					
ITEM	REF	COMPONENT DESCRIPTION	MFR'S CODE	MANUFACTURER'S PART NUMBER	SD STOCK NUMBER	T/Q
		BOARD, PC	52542	067380	067380	1
	C1	CAPACITOR, Ceramic 0.1 µF 20%, 50 V	56289	5C023104X0500C5	100178	14
	C2	CAPACITOR, Chip 0.056 µF 20%, 100 V	96733	SB31BX563MP	100257	32
	C3	Same as C2				
	C4	Same as C1				
	C5 thru C9	Same as C2				
	C10 thru C17	Same as C1				
	C18	Same as C2				
	C19	Same as C1				
	C20 thru C23	Same as C2				
	C24	Same as C1				
	C25	CAPACITOR, Chip 27 pF 5%, 100 V	32159	SC21BY270J0	100299	1
	C26 thru C30	Same as C2				
	C31	CAPACITOR, Chip 5000 pF, 125 V	32159	R-2180Special	100297	3
	C32	Same as C31				
	C33 thru C44	Same as C2				
	C45 thru C48	Not Used				
	C49	Same as C2				
	C50	Same as C31				
	C51 thru C53	Same as C2				
	C54	CAPACITOR, DM 220 pF 5%, 500 V	72136	DM15FD221J0	100220	1
	C55	Same as C1				
	C56	Same as C1				

REPLACEABLE PARTS LIST

TITLE A4A15, Synthesizer Motherboard Assembly 06738001 (Cont'd)

ITEM	REF	COMPONENT DESCRIPTION	MFR'S CODE	MANUFACTURER'S PART NUMBER	SD STOCK NUMBER	T/Q
	C57	CAPACITOR, Ceramic 1 µF 20%, 50 V	56289	5CZ5U105X0050C5	100176	1
	CR1	DIODE, Signal 50 V	03508	1N4151	100385	1
	J1 thru J13	CONNECTOR, PC Edge 22-pin	54453	ISM22DRK-S50	102806	13
	L1 thru L6	INDUCTOR, Fixed 2.2 µH 10%	00213	WEE-WEE-2.2	101309	16
	L7	INDUCTOR, Fixed 2.7 µH 10%	00213	WEE-2.7	101299	1
	L8 thru L17	Same as L1				
	A16	ASSEMBLY, Mixer	52542	05547001	05547001	1
		SCREW, PHMS 6-32 x 3/16	96906	MS51957-25	10063203	4
		WASHER, Split Lock No. 2	96906	MS35337-77	100661	4
		WASHER, Split No. 2	96906	MS15795-802	100614	4

REPLACEABLE PARTS LIST

TITLE A4A16, Mixer PC Assembly 05547001 Rev E (Figure 7-46)

ITEM	REF	COMPONENT DESCRIPTION	MFR'S CODE	MANUFACTURER'S PART NUMBER	SD STOCK NUMBER	T/Q
		BOARD, PC	52542	055470	055470	1
	C1	CAPACITOR, Chip 0.056 µF 20%, 100 V	96733	SB31BX563MP	100257	1
	C2	CAPACITOR, Chip 2 pF 50 V	71590	N050BF2R0DPS	117277	2
	C3	Same as C2				
	J1 thru J3	RECEPTICAL, RF	98291	51-053-0000	103173	3
	R1	RESISTOR, CC 68 Ω 5%, 1/8 W	01121	BB6805	101700	1
	R2	RESISTOR, CC 220 Ω 5%, 1/8 W	01121	BB2215	101798	1
	R3	RESISTOR, CC 470 Ω 5%, 1/8 W	01121	BB4715	101709	1
	R4	RESISTOR, CC 56 Ω 5%, 1/8 W	01121	BB5605	101816	2
	R5	RESISTOR, CC 75 Ω 5%, 1/8 W	01121	BB7505	101818	1
	R6	Same as R4				
	U1	INTEGRATED CIRCUIT RF Amplfier 40-890 MHz	25403	OM335	103012	1
	U2	INTEGRATED CIRCUIT Mixer DBLBAL, 1-1000 MHz	15542	SAM-2	102815	1
		SHIELD, Mixer	52542	055726	055726	1
		TERMINAL, Swage	88245	2000B-1	100482	1
		SCREW, PHMS 2-56 x 3/16	96906	MS51957-2	10062503	4
		WASHER, Split Lock No. 2	96906	MS35337-77	100661	4
		WASHER, Split No. 2	96906	MS15795-802	100614	4

REPLACEABLE PARTS LIST

TITLE	A4A17, Connector PC Assembly 05569301 Rev A (Figure 7-17)				
ITEM	REF	COMPONENT DESCRIPTION	MFR'S CODE	MANUFACTURER'S PART NUMBER	SD STOCK NUMBER	T/Q
		BOARD, PC	52542	055693	055693	1
		BRACKET	52542	05544401	05544401	2
		SPACER, Swage 4-40	71279	1300-9	100492	2
		SPACER, Swage	55566	1531B6B3	100517	1
		NUT, Kep 4-40	78553	D10558-440-24	100656	2
		SCREW, PHMS 4-40 x 3/16	96906	MS51957-12	10062603	2
		WASHER, Flat No. 4	96906	MS15795-803	100703	2

REPLACEABLE PARTS LIST

TITLE A5, Std Clock Oscillator Chassis Assembly 05756001 Rev R (Figure 7-48)

ITEM	REF	COMPONENT DESCRIPTION	MFR'S CODE	MANUFACTURER'S PART NUMBER	SD STOCK NUMBER	T/Q
1		CHASSIS, Oscillator	52542	057524	057524	1
2		ASSEMBLY Osc Control PC	52542	05754001	05754001	1
3		OSCILLATOR	52542	067401	067401	1
4		BRACKET, Oscillator Mtg.	52542	07549801	07549801	1
5		CLAMP, Oscillator	52542	067492	067492	2
6	J5,J6	RECEPTACLE, BNC Short	81349	UG-1094/U	101155	2
10		SCREW, PHMS 6-32 x 1/4	96906	MS51957-26	10063204	5
11		WASHER, Flat No. 6	96906	MS15795-805	100704	9
12	C104, C105	CAPACITOR, Ceramic .02 µF, 500 V	72982	841-000-Z5V203Z	106489	2
13		SCREW, FHMS 6-32 x 5/16	96906	MS24693-C25	10073105	2
14	C102, C103	CAPACITOR, Ceramic 1 µF 20%, 50 V	56289	5CZ5U105X0050C5	100176	2
15		SCREW, PHMS 6-32 x 5/16	96906	MS51957-27	10063205	8
16		LUG, Solder	79963	814	107077	2
18		NUT, Kep 6-32	78189	511-061800-00	100862	6
20		WASHER, Split No. 6	96906	MS35338-136	100712	9
21		TRANSFORMER	52542	116934	116934	1
22		PLATE, Transformer	52542	075485	075485	1
23	C101	CAPACITOR, Ceramic .01 µF +80-20%, 100 V	91418	BTO.01P80M20%	100103	1

REPLACEABLE PARTS LIST

TITLE A5A1, Std Oscillator Control PC Assembly 05754001 Rev H (Figure 7-49)						
ITEM	REF	COMPONENT DESCRIPTION	MFR'S CODE	MANUFACTURER'S PART NUMBER	SD STOCK NUMBER	T/Q
		BOARD, PC	52542	057540	057540	1
	C1	CAPACITOR, Ceramic .01 µF +80-20%, 100 V	91418	BT0.01P80M20%	100103	4
	C2	CAPACITOR, Tant 330 µF 10 %, 6 V	56289	196D337X9006TA1	103713	2
	C3	Same as C1				
	C4	Same as C1				
	C5	CAPACITOR, DP Ceramic 100 pF 5%, 100 V	96733	DB44BY101J	11763801	2
	C6	Same as C2				
	C7	CAPACITOR, Tant 39 µF 10%, 10 V	56289	150D396X9010B2	100183	1
	C8	CAPACITOR, Tant 15 µF 10%, 20 V	56289	150D156X9020B2	100211	2
	C9	Same as C8				
	C10	Not Used				
	C11	Same as C1				
	CR1 thru CR9	DIODE, Signal 50 V	03508	1N4151	100385	9
	L1	INDUCTOR, Fixed 39 µH 10%	99800	2150-38	101296	2
	L2	Same as L1				
	R1	RESISTOR, CC 1.5 kΩ 5%, 1/4 W	01121	CB1525	10157701	2
	R2	RESISTOR, CC 220 Ω 5%, 1/4 W	01121	CB2215	10156601	2
	R3	RESISTOR, CC 560 Ω 5%, 1/4 W	01121	CB5615	10158301	1
	R4	Not Used				
	R5	Same as R1				
	R6	Same as R2				
	R7 thru R12	Not Used				
	R13	RESISTOR, CC 6.8 k 5%, 1/4 W	01121	CB6825	10154401	1
	R14	RESISTOR, CC 470 Ω 5%, 1/4 W	01121	CB4715	10162501	2
	R15	RESISTOR, CC 150 Ω 5%, 1/4 W	01121	CB1515	101615	1

TITLE A5A1, Std Oscillator Control PC Assembly 05754001 (Cont'd)

ITEM	REF	COMPONENT DESCRIPTION	MFR'S CODE	MANUFACTURER'S PART NUMBER	SD STOCK NUMBER	T/Q
	R16	Same as R14				
	R17	RESISTOR, CC 56 Ω 5%, 1/4 W	01121	CB5605	101735	1
	R18 thru R21	Not Used				
	R22	RESISTOR, CC 1.8 k 5%, 1/4 W	01121	CB1825	10160201	2
	R23	Same as R22				
	S1	SWITCH, DPDT Slide	82389	46206LFE.078PC	103301	1
	U1	INTEGRATED CIRCUIT, TTL SSI Quad 2-Input NAND Gate	01295	SN74S132N	045271	1
	U2	INTEGRATED CIRCUIT, TTL MSI Sync, BNC Up/Down Counter	01295	SN74LS192N	103106	1
	U3	INTEGRATED CIRCUIT, TTL One-Shot Multivibrator	01295	SN74121N	025760	1
	U4	INTEGRATED CIRCUIT, TTL SSI Quad 2-Input NAND Gate	01295	SN74LS00N	103130	1
	U5	INTEGRATED CIRCUIT Resistor Network 18 kΩ	52542	067114	067114	1
		TERMINAL, Swage	88245	2000B-1	100482	26
		TERMINAL, Swage	88245	1309B-1	100508	3

REPLACEABLE PARTS LIST

TITLE A5, Opt 01 High Stab Clock Osc Chassis Assembly 05756003 Rev F (Figure 7-51)

ITEM	REF	COMPONENT DESCRIPTION	MFR'S CODE	MANUFACTURER'S PART NUMBER	SD STOCK NUMBER	T/Q
1		CHASSIS, Oscillator	52542	057524	057524	1
2		ASSEMBLY, Osc Control PC	52542	05754003	05754003	1
3		OSCILLATOR	52542	03342801	03342801	1
4		TRANSFORMER	52542	053959	053959	1
5	U5	INTEGRATED CIRCUIT Voltage Regulator +24 V	07263	MC7824	045246	1
6		RECEPTACLE, BNC Short	81349	UG-1094/U	101155	2
7		SCREW, PHMS 4-40 x 1/4	96906	MS51957-13	10062604	1
9		SCREW, PHMS 6-32 x 5/16	96906	MS51957-27	10063205	6
10		SCREW, PHMS 6-32 x 1/4	96906	MS51957-26	10063204	5
11		WASHER, Split No. 6	96906	MS35338-136	100712	8
12		WASHER, Split No. 4	96906	MS35338-135	100711	1
13		WASHER, Flat No. 4	96906	MS15795-803	100703	1
15		SCREW, PHMS 6-32 x 3/8	96906	MS51957-28	10063206	2
16		LUG, Solder	79963	814	107077	2
17		WASHER, Flat No. 6	96906	MS15795-805	100704	7
19		CONNECTOR, Molex 12-pin	27264	03-06-2122	102808	1
20		WASHER, Split No. 6	96906	MS35338-136	100712	5

TITLE A5A1, Opt01 Hi Stab OSC Control PC Assy 05754003 Rev J (Fig 7-52)						
ITEM	REF	COMPONENT DESCRIPTION	MFR'S CODE	MANUFACTURER'S PART NUMBER	SD STOCK NUMBER	T/Q
		BOARD, PC	52542	057540	057540	1
	C1	CAPACITOR, Ceramic .01 μF +80-20%, 100 V	91418	DD560B10ZU103Z	10010301	4
	C2	CAPACITOR, Tant 330 μF 10%, 6 V	56289	196D337X9006 TA1	103713	2
	C3	Not Used				
	C4	Same as C1				
	C5	CAPACITOR, DP Ceramic 100 pF 5%, 100 V	96733	DB44BY101J	11762801	1
	C6	Same as C2				
	C7	CAPACITOR, Tant 39 μF 10%, 10 V	56289	150D396X9010B2	100183	1
	C8 thru C10	Not Used				
	C11	Same as C1				
	C12	Not Used				
	C13	Not Used				
	C14	CAPACITOR, Tant 4.7 μF 10%, 35 V	56289	150D475X9035B2	100071	1
	C15	Not Used				
	C16	Not Used				
	C17	CAPACITOR, DP Ceramic 820 pF 5%, 50 V	20932	5021ED100RD 821J	103291	1
	C18	Same as C1				
	CR1 thru CR9	DIODE, Signal 50 V	03508	1N4151	100385	11
	CR10	Not Used				
	CR11	Same as CR1				
	CR12	Same as CR1				
	CR13 thru CR16	DIODE, Rectifier 400 V	02735	1N5395	100413	4
	L1	INDUCTOR, Fxd 39 μH 10%	99800	2150-38	101296	2
	L2	Same as L1				
	L3	INDUCTOR	52542	03966601	03966601	1
	R1	RESISTOR, CC 1.5 kΩ 5%, 1/4 W	01121	CB1525	101577	1
	R2	RESISTOR, CC 220 Ω 5%, 1/4 W	01121	CB2215	101566	2

REPLACEABLE PARTS LIST

TITLE A5A1, Opt 01 High Stab Oscillator Control PC Assembly 05754003 (Cont'd)

ITEM	REF	COMPONENT DESCRIPTION	MFR'S CODE	MANUFACTURER'S PART NUMBER	SD STOCK NUMBER	T/Q
	R3	RESISTOR, CC 560 Ω 5%, 1/4 W	01121	CB5615	10158301	1
	R4	Not Used				
	R5	Not Used				
	R6	Same as R2				
	R7 thru R12	Not Used				
	R13	RESISTOR, CC 6.8 k 5%, 1/4 W	01121	CB6825	10154401	2
	R14	RESISTOR, CC 470 Ω 5%, 1/4 W	01121	CB4715	10162501	3
	R15	RESISTOR, CC 150 Ω 5%, 1/4 W	01121	CB1515	10161501	1
	R16	Same as R14				
	R17	RESISTOR, CC 56 Ω 5%, 1/4 W	01121	CB5605	101735	1
	R18	Same as R14				
	R19	Not Used				
	R20	Not Used				
	R21	Not Used				
	R22	RESISTOR, CC 1.8 k 5%, 1/4 W	01121	CB1825	10160201	1
	R23	Same as R13				
	S1	SWITCH, DPDT Slide	82389	46206LFE.078PC	103301	1
	U1	INTEGRATED CIRCUIT, TTL SSI Quad 2-Input NAND Gate	01295	SN74S132N	045271	1
	U2	INTEGRATED CIRCUIT, TTL MSI Sync, BNC Up/Down Counter	01295	SN74LS192N	103106	1
	U3	INTEGRATED CIRCUIT, TTL One-Shot Multivibrator	01295	SN74121N	025760	1
	U4	INTEGRATED CIRCUIT, TTL SSI Quad 2-Input NAND Gate	01295	SN74LS00N	103130	1
	U5	INTEGRATED CIRCUIT Resistor Network 4 18 kΩ	52542	067114	067114	1
		TERMINAL, Swage	88245	2000B-1	100482	26
		TERMINAL, Swage	88245	1309B-1	100508	3

REPLACEABLE PARTS LIST

TITLE A5, Option 02 TCXO Oscillator Chassis Assembly 05756002 Rev F (Figure 7-54)

ITEM	REF	COMPONENT DESCRIPTION	MFR'S CODE	MANUFACTURER'S PART NUMBER	SD STOCK NUMBER	T/Q
1		CHASSIS, Oscillator	52542	057524	057524	1
2	A5A1	ASSEMBLY, Osc Control PC	52542	05754002	05754002	1
6		RECEPTACLE, BNC Short	81349	UG-1094/U	101155	2
10		SCREW, PHMS 6-32 x 1/4	96906	MS51957-26	10063204	5
11		WASHER, Flat No. 6	96906	MS15795-805	100704	5
15		SCREW, PHMS 6-32 x 3/8	96906	MS51957-28	10063206	4
16		LUG, Solder	79963	814	107077	2
19		CONNECTOR, Molex 12-pin	27264	03-06-2122	102808	1
20		WASHER, Split No. 6	96906	MS35338-136	100712	5

REPLACEABLE PARTS LIST

TITLE A5A1, Option 02 TCXO Osc Control PC Assembly 05754002 Rev H (Figure 7-55)

ITEM	REF	COMPONENT DESCRIPTION	MFR'S CODE	MANUFACTURER'S PART NUMBER	SD STOCK NUMBER	T/Q
		BOARD, PC	52542	057540	057540	1
	C1	CAPACITOR, Ceramic .01 µF +80-20%, 100 V	91418	BTO.01P80M20%	100103	4
	C2	CAPACITOR, Tant 330 µF 10 %, 6 V	56289	196D337X9006TA1	103713	2
	C3	Same as C1				
	C4	Same as C1				
	C5	CAPACITOR, DP Ceramic 100 pF 5%, 100 V	96733	DB44BY101J	11763801	1
	C6	Same as C2				
	C7	CAPACITOR, Tant 39 µF 10%, 10 V	56289	150D396X9010B2	100183	1
	C9 thru C10	Not Used				
	C11	Same as C1				
	CR1 thru CR8	DIODE, Signal 50 V	03508	1N4151	100385	9
	CR9	Not Used				
	CR10	Same as CR1				
	L1	INDUCTOR, Fixed 39 µH 10%	99800	2150-38	101296	2
	L2	Same as L1				
	R1	RESISTOR, CC 1.5 kΩ 5%, 1/4 W	01121	CB1525	10157701	2
	R2	RESISTOR, CC 220 Ω 5%, 1/4 W	01121	CB2215	10156601	2
	R3	RESISTOR, CC 560 Ω 5%, 1/4 W	01121	CB5615	10158301	1
	R4	Not Used				
	R5	Same as R1				
	R6	Same as R2				
	R7 thru R12	Not Used				
	R13	RESISTOR, CC 6.8 k 5%, 1/4 W	01121	CB6825	10154401	1
	R14	RESISTOR, CC 470 Ω 5%, 1/4 W	01121	CB4715	10162501	2
	R15	RESISTOR, CC 470 Ω 5%, 1/4 W	01121	CB4715	10162501	1

REPLACEABLE PARTS LIST

TITLE A5A1, Option 02 TCXO Oscillator Control PC Assembly 05754002 (Cont'd)

ITEM	REF	COMPONENT DESCRIPTION	MFR'S CODE	MANUFACTURER'S PART NUMBER	SD STOCK NUMBER	T/Q
	R16	Same as R14				
	R17	RESISTOR, CC 56 Ω 5%, 1/4 W	01121	CB5605	101735	1
	R18 thru R21	Not Used				
	R22	RESISTOR, CC 1.8 k 5%, 1/4 W	01121	CB1825	10160201	2
	R23	Same as R22				
	U1	INTEGRATED CIRCUIT, TTL SSI Quad 2-Input NAND Gate	01295	SN74S132N	045271	1
	U2	INTEGRATED CIRCUIT, TTL MSI Sync, BNC Up/Down Counter	01295	SN74LS192N	103106	1
	U3	INTEGRATED CIRCUIT, TTL One-Shot Multivibrator	01295	SN74121N	025760	1
	U4	INTEGRATED CIRCUIT, TTL SSI Quad 2-Input NAND Gate	01295	SN74LSOON	103130	1
	U5	INTEGRATED CIRCUIT Resistor Network 4 18 kΩ	52542	067114	067114	1
	U6	TCXO, 4 MHz	52542	055284	055284	1
		TERMINAL, Swage	88245	2000B-1	100482	26
		TERMINAL, Swage	88245	1309B-1	100508	3

REPLACEABLE PARTS LIST

TITLE	Option 06, IEEE Frequency Control Assembly 057924 Rev A (Figure 7-57)				
ITEM	REF	COMPONENT DESCRIPTION	MFR'S CODE	MANUFACTURER'S PART NUMBER	SD STOCK NUMBER	T/Q
		ADD				
	A3A4	ASSEMBLY, Freq Control PC	52542	05784101	05784101	1
	A4A5	ASSEMBLY, Source 2 PC	52542	06700501	06700501	1
		GUIDE, Vertical Card	23880	1250V	102781	2
		SCREW, PHMS 4-40 x 1/2	96906	MS51957-17	10062608	2
		WASHER, Split No. 4	96906	MS35338-135	100711	2
		WASHER, Flat No. 4	96906	MS15795-803	100703	2
		ASSEMBLY, Remote Cable	52542	05792501	05792501	1
		CONNECTOR, Rectangular 24-pin	02660	57-20240-2	117054	1
		CLAMP, Cable 9/16	09922	HP-9N	100732	1
		STANDOFF, Male-Female	52542	057365	057365	2
		RECEPTACLE, BNC Short	81349	UG-1094/U	101155	2
		LUG, Solder	79963	814	107077	2
		DELETE				
		PLATE, Cover 24-pin	52542	03141811	03141811	1
		PLUG, Button	83330	652	100840	2
		ASSEMBLY, Source 2 PC	52542	05362401	05362401	1

REPLACEABLE PARTS LIST

TITLE	Option 07, IEEE Frequency and Amplitude Assembly 06725501 Rev E				
ITEM	REF	COMPONENT DESCRIPTION	MFR'S CODE	MANUFACTURER'S PART NUMBER	SD STOCK NUMBER	T/Q
		ADD				
	A3A4	ASSEMBLY, Freq Control PC	52542	05784101	05784101	1
	A3A5	ASSEMBLY, Amp Control PC	52542	05797101	05797101	1
	A4A5	ASSEMBLY, Source 2 PC	52542	06700501	06700501	1
		GUIDE, Vertical Card	23880	1250V	102781	4
		SCREW, PHMS 4-40 x 1/2	96906	MS51957-17	10062608	4
		WASHER, Split No. 4	96906	MS35338-135	100711	4
		WASHER, Flat No. 4	96906	MS15795-803	100703	4
		ASSEMBLY, Remote Cable	52542	05792501	05792501	1
		CONNECTOR, Rectangular 24-pin	02660	57-20240-2	117054	1
		CLAMP, Cable 9/16	09922	HP-9N	100732	1
		SPACER, Metric IEEE	52542	057361	057361	2
		RECEPTACLE, BNC Short	81349	UG-1094/U	101155	2
		LUG, Solder	79963	814	107077	2
		ATTENUATOR	52542	067880	067880	1
		SCREW, FHMS 4-40 x 3/16	96906	MS24693-C1	10072003	6
		SPACER, 4-40 x 3/16	06540	8110A-0440-17	100905	2
		SCREW, PHMS 4-40 x 1/4	96906	MS51957-13	10062604	2
		WASHER, Split No. 4	96906	MS35338-135	100711	2
		ASSEMBLY, Attenuator Switch	52542	06722701	06722701	1
		DELETE				
		PLATE, Cover 24-pin	52542	03141811	03141811	1
		PLUG, Button	83330	652	100840	2
		ASSEMBLY, Source 2 PC	52542	05362401	05362401	1
	U1	ATTENUATOR	52542	053994	053994	1

REPLACEABLE PARTS LIST

TITLE A3A4, Frequency Control PC Assembly 05784101 Rev G (Figure 7-58)

ITEM	REF	COMPONENT DESCRIPTION	MFR'S CODE	MANUFACTURER'S PART NUMBER	SD STOCK NUMBER	T/Q
		BOARD, PC	52542	057841	057841	1
	C1	CAPACITOR, Ceramic .01 µF +80-20%, 100 V	91418	BT0.01P80M20%	100103	7
	C2	Not Used				
	C3	Same as C1				
	C4	CAPACITOR, Ceramic .001 µF 20%, 1 kV	91418	TYPE B	100076	1
	C5	Same as C1				
	C6	CAPACITOR, DP Ceramic 220 pF 5%, 100 V	96733	DB44BY221J	11763301	3
	C7	CAPACITOR, DP Ceramic 470 pF 5%, 100 V	96733	DB45BY471J	11763701	2
	C8	CAPACITOR, Tant 39 µF 10%, 10 V	56289	150D396X9010B2	100183	1
	C9	CAPACITOR, DP Ceramic 68 pF 5%, 100 V dcw	96733	DB44BY680J	11762601	2
	C10	Same as C6				
	C11	Same as C1				
	C12	Same as C6				
	C13	Same as C1				
	C14	CAPACITOR, DP Ceramic 1000 pF 5%, 100 V	96733	DB45BY102J	11763901	1
	C15	Same as C7				
	C16	Same as C1				
	C17	Same as C1				
	C18	CAPACITOR, Ceramic .022 µF 20%, 25 V	71590	2DDU60E223M	106483	1
	C19	Same ad C9				
	C20	CAPACITOR, DP Ceramic 330 pF 5%, 100 V	96733	DB45BY331J	11763601	2
	C21	Same as C20				
	CR1	DIODE, Rectifier 400 V	02735	1N5395	100413	1
	J1	CONNECTOR, Molex 9-pin	27264	03-06-1092	102812	1
		PIN, Connector P/O J1	27264	02-06-7103	10282206	9
	Q1	TRANSISTOR, SINPN 40 V	27014	PN2222A	103735	2
	Q2	Same as Q1				

REPLACEABLE PARTS LIST

TITLE	A3A4, Frequency Control PC Assembly 05784101 (Cont'd)				
ITEM	REF	COMPONENT DESCRIPTION	MFR'S CODE	MANUFACTURER'S PART NUMBER	SD STOCK NUMBER	T/Q
	R1	RESISTOR, CC 100 k 5%, 1/4 W	01121	CB1045	101558	10
	R2	RESISTOR, CC 10 k 5%, 1/4 W	01121	CB1035	101570	8
	R3	Same as R1				
	R4	RESISTOR, CC 3 kΩ 5%, 1/4 W	01121	CB3025	101548	4
	R5	RESISTOR, CC 6.2 k 5%, 1/4 W	01121	CB6225	101608	4
	R6	Same as R2				
	R7	Same as R2				
	R8	RESISTOR, CC 22 k 5%, 1/4 W	01121	CB2235	101572	2
	R9	Same as R4				
	R10	Same as R5				
	R11	Same as R4				
	R12	Same as R5				
	R13	Same as R4				
	R14	Same as R5				
	R15	RESISTOR, CC 1.5 M 5%, 1/4 W	01121	CB1555	101659	1
	R16	Same as R1				
	R17	Same as R1				
	R18	Same as R1				
	R19	RESISTOR, CC 27 kΩ 5%, 1/4 W	01121	CB2735	101587	3
	R20	Same as R2				
	R21	RESISTOR, CC 47 kΩ 5%, 1/4 W	01121	CB4735	101574	1
	R22	Same as R19				
	R23	Same as R19				
	R24	Same as R2				
	R25	Same as R1				
	R26	Same as R1				
	R27	Same as R1				
	R28	Same as R2				
	R29	Same as R1				
	R30	Same as R1				
	R31	Same as R8				
	R32	RESISTOR, CC 1 k 5%, 1/4 W	01121	CB1025	101569	3

REPLACEABLE PARTS LIST

TITLE	A3A4, Frequency Control PC Assembly 05784101 (Cont'd)				
ITEM	REF	COMPONENT DESCRIPTION	MFR'S CODE	MANUFACTURER'S PART NUMBER	SD STOCK NUMBER	T/Q
	R33	RESISTOR, CC 3.9 k 5%, 1/4 W	01121	CB3925	101601	1
	R34	Same as R2				
	R35	Same as R32				
	R36	Same as R32				
	R37	Same as R2				
	U1	INTEGRATED CIRCUIT 5 Bit Comparator	07263	93L24PC	117020	1
	U2	INTEGRATED CIRCUIT, CMOS Decade Counter	04713	MC14017CP	103324	3
	U3	INTEGRATED CIRCUIT, CMOS Quad 2-Input NOR Gate	04713	MC14001BCP	045283	2
	U4	INTEGRATED CIRCUIT, TTL SSI 6-Bit Inverter	01295	SN74LS14N	117083	1
	U5	INTEGRATED CIRCUIT, TTL 4-Bus Driver/Receiver	04713	MC3446P	117021	3
	U6	Same as U5				
	U7	Same as U5				
	U8	INTEGRATED CIRCUIT, CMOS Quad 2-Input OR Gate	04713	MC14071BCP	103940	5
	U9	INTEGRATED CIRCUIT, CMOS Quad 2-Input AND Gate	04713	MC14081BCP	116101	5
	U10	INTEGRATED CIRCUIT, LIN MSC Wide Range Timer	18324	NE555V	045208	1
	U11	INTEGRATED CIRCUIT, CMOS Dual D Flip-Flop	04713	MC14013BCP	103199	4
	U12	Same as U11				
	U13	Same as U11				
	U14	INTEGRATED CIRCUIT, CMOS Monostable Multiplier	04713	MC14528BCP	045289	3
	U15	INTEGRATED CIRCUIT, CMOS Hex Inverter Buffer	04713	MC14049UBCP	103217	1
	U16	INTEGRATED CIRCUIT BCD Decimal Decoder	04713	MC14028BCP	045286	3
	U17	Same as U16				
	U18	Same as U16				
	U19	INTEGRATED CIRCUIT, CMOS Quad 2-Input NAND Gate	04713	MC14011BCP	103937	5
	U20	INTEGRATED CIRCUIT, TTL SSI Quad 2-Input NAND Gate	01295	SN74LSOON	103130	1

REPLACEABLE PARTS LIST

TITLE A3A4, Frequency Control PC Assembly 05784101 (Cont'd)

ITEM	REF	COMPONENT DESCRIPTION	MFR'S CODE	MANUFACTURER'S PART NUMBER	SD STOCK NUMBER	T/Q
	U21	INTEGRATED CIRCUIT, CMOS 2 4-Input NAND Gate	04713	MC14012BCP	103938	2
	U22	Same as U21				
	U23	Same as U14				
	U24	INTEGRATED CIRCUIT, CMOS 3-Input NAND Gate	04713	MC14023BCP	116099	2
	U25	Same as U9				
	U26	Same as U8				
	U27	Same as U19				
	U28	Same as U8				
	U29	Same as U19				
	U30	Same as U9				
	U31	INTEGRATED CIRCUIT, CMOS 3 3-Input AND Gate	02735	MC14073BE	103941	2
	U32	Same as U19				
	U33	Same as U24				
	U34	Same as U14				
	U35	Same as U2				
	U36	Same as U3				
	U37	Same as U11				
	U38	Same as U2				
	U39	INTEGRATED CIRCUIT, TTL Dual VC Multivibrator	04713	MC4024P	045206	1
	U40	Same as U19				
	U41	Same as U8				
	U42	Same as U31				
	U43	INTEGRATED CIRCUIT, CMOS Binary Up/Down Counter	04713	MC14516BCP	117113	2
	U44	INTEGRATED CIRCUIT, CMOS 4-bit AND/OR Selector	04713	MC14519BCP	045288	5
	U45	Same as U44				
	U46	Same as U9				
	U47	Same as U8				
	U48	Same as U44				
	U49	Same as U44				
	U50	Same as U43				
	U51	Same as U9				
	U52	Same as U44				
	U53	INTEGRATED CIRCUIT, CMOS 3-State RAM	07263	F4725	117314	3

REPLACEABLE PARTS LIST

TITLE A3A4, Frequency Control PC Assembly 05784101 (Cont'd)

ITEM	REF	COMPONENT DESCRIPTION	MFR'S CODE	MANUFACTURER'S PART NUMBER	SD STOCK NUMBER	T/Q
	U54	Same as U53				
	U55	Same as U53				
	U56	INTEGRATED CIRCUIT, CMOS Hex Buffer, CMOS-to-TTL	27014	DS3630N	117318	1
	U57	INTEGRATED CIRCUIT Resistor Network 100 kΩ	52542	057913	057913	5
	U58	RESISTOR NETWORK 12 kΩ (x4)	52542	045008	045008	3
	U59	Same as U58				
	U60	Same as U58				
	U61 thru U64	Same as U57				
		SPACER, 4-40 x 1/2	83330	2732	102754	1
		SCREW, PHMS 4-40 x 3/8	96906	MS51957-15	10062606	1
		WASHER, Split No. 4	96906	MS35338-135	100711	1
		WASHER, Flat No. 4	96906	MS15795-803	100703	1
		SOCKET, IC 14-pin	82647	C8814-01	117040	2
		SOCKET, IC 16-pin	82647	C8816-01	117041	6

REPLACEABLE PARTS LIST

TITLE A3A5, Amplitude Control PC Assembly 05797101 Rev H (Figure 7-60)

ITEM	REF	COMPONENT DESCRIPTION	MFR'S CODE	MANUFACTURER'S PART NUMBER	SD STOCK NUMBER	T/Q
		BOARD, PC	52542	057971	057971	
	C1	CAPACITOR, DP Ceramic 15 pF 5%, 100 V	96733	DB44BY150J	11762401	1
	C2	CAPACITOR, DP Ceramic 33 pF 5%, 100 V	96733	DB44BY330J	11747101	2
	C3	Same as C2				
	C4	CAPACITOR, Tant 100 µF 10%, 20 V	56289	150D107X9020S2	100208	2
	C5	CAPACITOR, Ceramic .01 µF +80-20%, 100 V	91418	BT0.01P80M20%	100103	12
	C6	CAPACITOR, Tant 15 µF 10%, 20 V	56289	150D156X9020B2	100211	1
	C7 thru C10	Same as C5				
	C11	CAPACITOR, Tant 2.2 µF 10%, 20 V dcw	56289	150D225X9020A2	100203	2
	C12	Same as C4				
	C13 thru C17	Same as C5				
	C18	Same as C11				
	C19	CAPACITOR, Tant 10 µF 10%, 10 V	56289	196D106X9020JA1	103715	5
	C20	CAPACITOR, Tant 39 µF 10%, 10 V	56289	150D396X9010B2	100183	1
	C21	CAPACITOR, Ceramic .022 µF 20%, 25 V	71590	2DDU60E223M	106483	2
	C22	Same as C21				
	C23	CAPACITOR, DP Ceramic 680 pF 5%, 100 V	96733	DB45BY681J	11763801	1
	C24	CAPACITOR, Ceramic 0.1 µF 20%, 50 V	56289	5C023104X0500C5	100178	1
	C25A	Same as C19				
	C25B	Same as C19				
	C25C	Same as C19				
	C25D	Same as C19				
	C26A	Not Used				
	C26B	Not Used				
	C26C	Not Used				
	C26D	Not Used				
	C27	CAPACITOR, Tant 4.7 µF 10%, 35 V	56289	150D475X9035B2	100071	

TITLE A3A5, Amplitude Control PC Assembly 05797101 (Cont'd)

ITEM	REF	COMPONENT DESCRIPTION	MFR'S CODE	MANUFACTURER'S PART NUMBER	SD STOCK NUMBER	T/Q
	C28	Same as C5				
	CR1 thru CR7	DIODE, Signal 125 V	07263	FDH300	102703	8
	CR8	DIODE, Signal 50 V	03508	1N4151	100385	7
	CR9	Not Used				
	CR10 thru CR14	Same as CR8				
	CR15	Not Used				
	CR16	Same as CR8				
	CR17A	DIODE, Rectifier 400 V	02735	1N5395	100413	8
	CR17B	Same as CR17A				
	CR17C	Same as CR17A				
	CR17D	Same as CR17A				
	CR18A	Same as CR17A				
	CR18B	Same as CR17A				
	CR18C	Same as CR17A				
	CR18D	Same as CR17A				
	CR19	Not Used				
	CR20	Same as CR1				
	Q1	TRANSISTOR, JFET P-Channel	04713	2N3993	103347	1
	Q2 thru Q7	TRANSISTOR, JFET N-Channel	81349	2N4091	101409	7
	Q8	TRANSISTOR, SINPN	01295	2N2222	101347	6
	Q9	TRANSISTOR, SIPNP 60 V	07263	PN3645-18	101367	5
	Q10A	Same as Q8				
	Q10B	Same as Q8				
	Q10C	Same as Q8				
	C10D	Same as Q8				
	Q11A	Not Used				
	Q11B	Not Used				
	Q11C	Not Used				
	Q11D	Not Used				
	Q12A	Same as Q9				
	Q12B	Same as Q9				
	Q12C	Same as Q9				
	Q12D	Same as Q9				

REPLACEABLE PARTS LIST

TITLE A3A5, Amplitude Control PC Assembly 05795101 (Cont'd)

ITEM	REF	COMPONENT DESCRIPTION	MFR'S CODE	MANUFACTURER'S PART NUMBER	SD STOCK NUMBER	T/Q
	Q13	Same as Q8				
	Q14	Same as Q2				
	R1	RESISTOR, Variable 10 k 10%, 3/8 W	73138	89PR10K	102472	1
	R2	RESISTOR, Variable 25 k 10%, 1/2 W	73138	89PR25K	106136	2
	R3	RESISTOR, Variable 5 kΩ 10%, 3/8 W	73138	89PR5K	102473	1
	R4	RESISTOR, Variable 20 k 10%, 3/8 W	73138	89PR20K	102470	1
	R5	Same as R2				
	R6	RESISTOR, Variable 1 kΩ 10%, 3/8 W	73138	89PR1K	102181	1
	R7	RESISTOR, Variable 2 kΩ 10%, 3/8 W	73138	89PR2K	102119	1
	R8	RESISTOR, Metal Film 1.00 kΩ 1%, 1/8 W	81349	RN60C1001F	106161	3
	R9	RESISTOR, CC 470 Ω 5%, 1/4 W	01121	CB4715	101625	1
	R10	RESISTOR, CC 100 k 5%, 1/4 W	01121	CB1045	101558	11
	R11	RESISTOR, Metal Film 20 k 1%, 1/8 W	81349	RN60C2002F	106172	7
	R12	Same as R11				
	R13	RESISTOR, CC 22 k 5%, 1/4 W	01121	CB2235	101572	2
	R14	RESISTOR, Metal Film 100 k 1Ω, 0.1 W	81349	RN55C1003F	102525	1
	R15	RESISTOR, Metal Film 499 k 1%, 1/8 W	81349	RN60C4990F	106190	1
	R16	Same as R10				
	R17	RESISTOR, Metal Film 90.9 k 1%, 1/8 W	81349	RN60C9092F	106205	1
	R18	Same as R11				
	R19	RESISTOR, MF 50.0 k .1 %, 1/8 W	14298	RN60C	106356	1
	R20	Same as R10				
	R21	Same as R10				
	R22	Same as R13				
	R23	Same as R8				

REPLACEABLE PARTS LIST

TITLE A3A5, Amplitude Control PC Assembly 05795101 (Cont'd)

ITEM	REF	COMPONENT DESCRIPTION	MFR'S CODE	MANUFACTURER'S PART NUMBER	SD STOCK NUMBER	T/Q
	R24	RESISTOR, MF 61.9 kΩ 1%, 0.1 W	81349	RN55C6192F	102286	1
	R25	Same as R8				
	R26	RESISTOR, Metal Film 23.7 k 1%, 1/8 W	81349	RN60CEE-1/8	106339	1
	R27	Same as R10				
	R28	Same as R10				
	R29	Same as R10				
	R30	Same as R11				
	R31	RESISTOR, CC 10 k 5%, 1/4 W	01121	CB1035	101570	15
	R32	Same as R11				
	R33	Same as R11				
	R34	Same as R31				
	R35	Same as R11				
	R36	Same as R31				
	R37	Same as R31				
	R38	Same as R10				
	R39	Same as R10				
	R40	Same as R31				
	R41	Same as R10				
	R42	Same as R31				
	R43	RESISTOR, CC 1 k 5%, 1/4 W	01121	CB1025	101569	5
	R44	Same as R31				
	R45	Same as R31				
	R46 thru R53	RESISTOR, CC 2.7 k 5%, 1/4 W	01121	CB2725	101599	8
	R54 thru R56	Same as R31				
	R57A	Same as R43				
	R57B	Same as R43				
	R57C	Same as R43				
	R57D	Same as R43				
	R58A	Not Used				
	R58B	Not Used				
	R58C	Not Used				
	R58D	Not Used				

REPLACEABLE PARTS LIST

TITLE A3A5, Amplitude Control PC Assembly 05797101 (Cont'd)

ITEM	REF	COMPONENT DESCRIPTION	MFR'S CODE	MANUFACTURER'S PART NUMBER	SD STOCK NUMBER	T/Q
	R59A	Same as R31				
	R59B	Same as R31				
	R59C	Same as R31				
	R59D	Same as R31				
	R60A	Not Used				
	R60B	Not Used				
	R60C	Not Used				
	R60D	Not Used				
	R61A	Not Used				
	R61B	Not Used				
	R61C	Not Used				
	R61D	Not Used				
	R62	RESISTOR, CC 8.2 kΩ 5%, 1/4 W	01121	CB8225	101595	1
	R63	RESISTOR, CC 910 Ω 5%, 1/4 W	01121	CB9115	101805	1
	R64	RESISTOR, CC 100 Ω 5%, 1/4 W	01121	CB1015	101609	1
	R65	Same as R10				
	U1	INTEGRATED CIRCUIT Operational Amplifier	27014	LF356AH	117093	1
	U2	INTEGRATED CIRCUIT Operational Amplifier	27014	LM201AH	025758	2
	U3	INTEGRATED CIRCUIT Operational Amplifier	27014	LF355H	103701	2
	U4	Same as U4				
	U5	Same as U2				
	U6	RESISTOR NETWORK 12 kΩ (x4)	52542	045008	045008	1
	U7	Not Used				
	U8	INTEGRATED CIRCUIT Operational Amplifier	04713	MC4741CP	117406	2
	U9	Same as U8				
	U10	INTEGRATED CIRCUIT, CMOS Hex Inverter Buffer	04713	MC14049UBCP	103217	1
	U11	INTEGRATED CIRCUIT, TTL PROM MMI Program 1	52542	07519301	07519301	1
	U12	INTEGRATED CIRCUIT, CMOS Quad 2-Input AND Gate	04713	MC14081BCP	116101	1
	U13	INTEGRATED CIRCUIT, CMOS Quad 2-Input OR Gate	04713	MC14071BCP	103940	1

REPLACEABLE PARTS LIST

TITLE	A3A5, Amplitude Control PC Assembly 05797101 (Cont'd)				
ITEM	REF	COMPONENT DESCRIPTION	MFR'S CODE	MANUFACTURER'S PART NUMBER	SD STOCK NUMBER	T/Q
	U14	INTEGRATED CIRCUIT, CMOS NBCD Adder	04713	MC14560BCP	103433	3
	U15	INTEGRATED CIRCUIT, TTL PROM MMI Program 1	52542	07519401	07519401	1
	U16	Same as U14				
	U17	Same as U14				
	U18	INTEGRATED CIRCUIT, CMOS Monostable Multiplier	04713	MC14528BCP	045289	2
	U19	Same as U18				
	U20 thru U23	INTEGRATED CIRCUIT, CMOS 8-Bit Selectable Adrs. Latch	02735	CD4099BE	117116	4
	U24	INTEGRATED CIRCUIT, TTL PROM MMI Program 2	52542	07519302	07519302	1
	U25	INTEGRATED CIRCUIT, TTL PROM MMI Program 3	52542	07519303	07519303	1
	U26	INTEGRATED CIRCUIT BCD Decimal Decoder	04713	MC14028BCP	045286	1
	U27	INTEGRATED CIRCUIT, LIN MSC 8-bit DAC	04713	MC1408P7	117419	1
		SOCKET, IC 16-pin	82647	C8816-01	117041	2
		SOCKET, IC 24-pin	73803	C84-24-02	103845	3
		SPACER, 6-32 x 1/2	88245	1530-B-1/2	100532	2
		TERMINAL, Swage	88245	1280B	100496	5

REPLACEABLE PARTS LIST

TITLE	A4A5, Options 06/07 Source 2 PC Assembly 06700501 Rev H (Figure 7-62)				
ITEM	REF	COMPONENT DESCRIPTION	MFR'S CODE	MANUFACTURER'S PART NUMBER	SD STOCK NUMBER	T/Q
		BOARD, PC	52542	067005	067005	
	C1	CAPACITOR, Electrolytic 100 µF, 25 V	25088	841283-B5107-T	100165	3
	C2	CAPACITOR, Ceramic 0.001 µF 20%, 50 V	71590	CW15C102M	100251	10
	C3	Same as C2				
	C4	Same as C2				
	C5	CAPACITOR, Tant 10 µF 10%, 20 V	56289	150D106X9020B2	100063	2
	C6	CAPACITOR, Tant 3.3 µF 10%, 15 V	56289	150D335X9015A2	100204	1
	C7	CAPACITOR, DP Ceramic 0.01 µF 20%, 100 V	04222	3429100C103M	117570	7
	C8	Same as C7				
	C9	CAPACITOR, Ceramic 0.1 µF 20%, 50 V	56289	5C023104X0500C5	100178	2
	C10	Same as C1				
	C11	Same as C2				
	C12	CAPACITOR, Tant 1 µF 10%, 35 V	56289	150D105X9035A2	100082	2
	C13	Same as C2				
	C14	Same as C2				
	C15	Same as C2				
	C16	Not Used				
	C17 thru C20	Same as C7				
	C21	Same as C1				
	C22	Not Used				
	C23	Same as C2				
	C24	Same as C9				
	C25	Same as C12				
	C26	Same as C7				
	C27	Same as C5				
	C28	Same as C2				
	C29	Not Used				
	C30	Same as C2				
	C31	CAPACITOR, DP Ceramic 2 pF 5%, 100 V	96733	DB44BY2R00	11762001	1

REPLACEABLE PARTS LIST

TITLE A4A5, Options 06/06 Source 2 PC Assembly 06700501 (Cont'd)

ITEM	REF	COMPONENT DESCRIPTION	MFR'S CODE	MANUFACTURER'S PART NUMBER	SD STOCK NUMBER	T/Q
	CR1	DIODE, Varicap 4 V	52673	KV2302A	116906	2
	CR2	Same as CR1				
	CR3	DIODE, Signal 50 V	03508	1N4151	100385	2
	CR4	Same as CR3				
	CR5	DIODE, Signal 70 V	28480	5082-2800	100442	2
	CR6	Same as CR5				
	L1	Not Used				
	L2	INDUCTOR, 2.2 ga 1-1/2 turn	52542	05399501	05399501	2
	L3	Same as L2				
	L4	INDUCTOR, Fixed 10 µH 10%	00213	WEE-WEE-10	101317	1
	Q1	TRANSISTOR, MOSFET N-Channel	04713	SPF739	101416	1
	R1	RESISTOR, CC 56 kΩ 5%, 1/4 W	01121	CB5635	101670	2
	R2	RESISTOR, CC 33 kΩ 5%, 1/4 W	01121	CB3335	101576	1
	R3	RESISTOR, CC 180 Ω 5%, 1/4 W	01121	CB1815	101668	1
	R4	RESISTOR, CC 1 k 5%, 1/4 W	01121	CB1025	101569	4
	R5	Same as R1				
	R6	RESISTOR, CC 5.6 kΩ 5%, 1/4 W	01121	CB5625	101584	1
	R7	RESISTOR, CC 15 kΩ 5%, 1/4 W	01121	CB1535	101552	2
	R8	Same as R7				
	R9	Same as R4				
	R10	Same as R4				
	R11	Same as R4				
	R12	RESISTOR, CC 18 k 5%, 1/4 W	01121	CB1835	101579	2
	R13	Same as R12				
	R14	RESISTOR, Variable 50 k 10%, 3/8 W	73138	89PR50K	102153	1
	R15	RESISTOR, CC 4.7 M 5%, 1/4 W	01121	CB4755	101661	1
	R16	RESISTOR, CC 100 Ω 5%, 1/4 W	01121	CB1015	101609	3
	R17	Same as R16				
	R18	RESISTOR, CC 10 k 5%, 1/4 W	01121	CB1035	101570	3

REPLACEABLE PARTS LIST

TITLE A4A5, Option 06/07 Source 2 PC Assembly 06700501 (Cont'd)

ITEM	REF	COMPONENT DESCRIPTION	MFR'S CODE	MANUFACTURER'S PART NUMBER	SD STOCK NUMBER	T/Q
	R19	Same as R18				
	R20	Same as R18				
	R21	Not Used				
	R22	Same as R16				
	TP1 thru TP7	TERMINAL, Swage	88245	1280B-1	100496	7
	U1	INTEGRATED CIRCUIT, TTL MSI Presettable Decade Ctr/Latch	01295	SN74196N	025784	1
	U2	INTEGRATED CIRCUIT, ECL MSI Divide-by-10/11	07263	11C90DC	103416	2
	U3	Same as U2				
	U4	INTEGRATED CIRCUIT, TTL MSI Counter Control Logic	04173	MC12014L	045263	1
	U5	INTEGRATED CIRCUIT, TTL MSI Phase Frequency Detector	07263	11CV44DC	116916	1
	U6 thru U10	INTEGRATED CIRCUIT, TTL MSI Programmable 1/N Deocder	04713	MC4016P	045237	5
	U11 thru U14	INTEGRATED CIRCUIT, TTL MSI Quad Latch	01295	SN74LS75N	103133	4
	U15	INTEGRATED CIRCUIT Operational Amplifier	27014	LF355H	103701	1
	XU2,3, 6-10	SOCKET, IC 16-pin	82647	C8816-01	117041	7
	XU5	SOCKET, IC 14-pin	82647	C8814-01	117040	1

CHAPTER 7

DRAWINGS

7-1. INTRODUCTION

This chapter contains the schematic and assembly drawings of the Model 1702 Signal Generator. The schematic diagrams relate to the detailed circuit descriptions located in Chapter 4 of this manual. The parts lists contained in Chapter 6 relate to the reference designation callouts on the schematic and assembly drawings. Table 7-1 provides the listing of assembly and schematic drawings by reference designator, title and drawing number.

Table 7-1 List of Assembly and Schematic Drawings

Figure No.	Title	Drawing No.	Page No.
7-1A	Test Assembly (Sheet 1 of 2)	057586	7-3
7-1B	Test Assembly (Sheet 2 of 2)	057586	7-4
7-2	Bottom Cover Assembly	067310	7-5
7-3	A1A1, Front Panel Assembly	057585	7-7
7-4	A2A1, Power Supply Chassis Assembly	057559	7-8
7-5	A2A2, Rectifier PCB Assembly	05760601	7-9
7-6	A2A3, Power Regulator Plug-in Assembly	057646	7-10
7-7	A2, Power Supply Schematic	7-057684	7-11
7-8	A3, Motherboard PCB Assembly	05790001	7-12
7-9	A3, Motherboard PCB Schematic	7-05790001	7-13
7-10	A3A1, Frequency Switch PCB Assembly	05754101	7-14
7-11	A3A1, Frequency Switch PCB Schematic	7-05754101	7-15
7-12	A3A2, Display PCB Assembly	05754401	7-16
7-13	A3A2, Display PCB Assembly	7-05754401	7-17
7-14	A3A3, Modulation Control PCB Assembly	05788201	7-18
7-15	A3A3, Modulation Control PCB Schematic	7-05788201	7-19
7-16A	A4, Synthesizer Assembly (Sheet 1 of 3)	067898	7-20
7-16B	A4, Synthesizer Assembly (Sheet 2 of 3)	067898	7-21
7-16C	A4, Synthesizer Assembly (Sheet 3 of 3)	067898	7-22
7-17	A4A17, Synthesizer Connection PCB Assembly	05569301	7-23
7-18	A4A15, Synthesizer Motherboard PCB Assembly	06738001	7-24
7-19	A4A15, Synthesizer Motherboard PCB Schematic	7-06738001	7-25
7-20	A4A1, AC Discriminator PCB Assembly	05563901	7-26
7-21	A4A1, AC Discriminator PCB Schematic	7-05563901	7-27
7-22	A4A2, 10 MHz VCO PCB Assembly	05566201	7-28
7-23	A4A2, 10 MHz VCO PCB Schematic	7-05566201	7-29
7-24	A4A3, DC Discriminator PCB Assembly	05537401	7-30
7-25	A4A3, DC Discriminator PCB Schematic	7-05537401	7-31
7-26	A4A4, Time Base Divider PCB Assembly	05395401	7-32
7-27	A4A4, Time Base Divider PCB Schematic	7-05395401	7-33
7-28	A4A5, Source 2 PCB Assembly	05362401	7-34
7-29	A4A5, Source 2 PCB Schematic	7-05362401	7-35

Table 7-1 List of Assembly and Schematic Drawings (Cont'd)

Figure No.	Title	Drawing No.	Page No.
7-30	A4A6, Source 3 PCB Assembly	05373501	7-36
7-31	A4A6, Source 3 PCB Schematic	7-05373501	7-37
7-32	A4A8, 400 MHz Reference Generator PCB Assembly	05566801	7-38
7-33	A4A8, 400 MHz Reference Generator PCB Schematic	7-05566801	7-39
7-34	A4A9, Logic PCB Assembly	05567101	7-40
7-35	A4A9, Logic PCB Schematic	7-05567101	7-41
7-36	A4A10, Divide-By-N PCB Assembly	05567001	7-42
7-37	A4A10, Divide-By-N PCB Schematic	7-05567001	7-43
7-38	A4A11, Source 4 PCB Assembly	05372401	7-44
7-39	A4A11, Source 4 PCB Schematic	7-05372401	7-45
7-40	A4A12, Phase Detector PCB Assembly	05538501	7-46
7-41	A4A12, Phase Detector PCB Schematic	7-05538501	7-47
7-42	A4A13, Source 5 PCB Assembly	05797001	7-48
7-43	A4A13, Source 5 PCB Schematic	7-05797001	7-49
7-44	A4A14, Amplifier PCB Assembly	05392901	7-50
7-45	A4A14, Amplifier PCB Schematic	7-05392901	7-51
7-46	A4A16, Mixer PCB Assembly	05547001	7-52
7-47	A4A16, Mixer PCB Schematic	7-05547001	7-53
7-48	A5, Standard Clock Oscillator Assembly	05756001	7-55
7-49	A5A1, Standard Oscillator Control PCB Assembly	05754001	7-56
7-50	A5A1, Standard Oscillator Control PCB Schematic	7-05756001	7-57
7-51	Option 01, A5 Clock Oscillator PCB Assembly	05756003	7-59
7-52	Option 01, A5A1 Oscillator Control PCB Assembly	05754003	7-50
7-53	Option 01, A5A1 Oscillator Control PCB Schematic	7-05756003	7-61
7-54	Option 02, A5 Clock Oscillator Assembly	05756002	7-63
7-55	Option 02, A5A1 Oscillator Control PCB Assembly	05754002	7-64
7-56	Option 02, A5A1 Oscillator Control PCB Schematic	7-05756002	7-65
7-57	Option 06, Remote Freq Control Installation	057924	7-67
7-58	Option 06, A3A4 Remote Freq Control PCB Assembly	05784101	7-68
7-59A	Option 06, A3A4 Remote Freq Control PCB Schematic	7-05784101	7-69
7-59B	Option 06, A3A4 Remote Freq Control PCB Schematic	7-05784101	7-70
7-59C	Option 06, A3A4 Remote Freq Control PCB Schematic	7-05784101	7-71
7-60	Option 07, A3A5 Remote Amp Control PCB Assembly	05797101	7-72
7-61A	Option 07, A3A5 Remote Amp Control PCB Schematic	7-05797101	7-73
7-61B	Option 07, A3A5 Remote Amp Control PCB Schematic	7-05797101	7-75
7-62	Options 06/07, A4A5 Source 2 PCB Assembly	06700501	7-76
7-63	Options 06/07, A4A5 Source 2 PCB Schematic	7-06700501	7-77

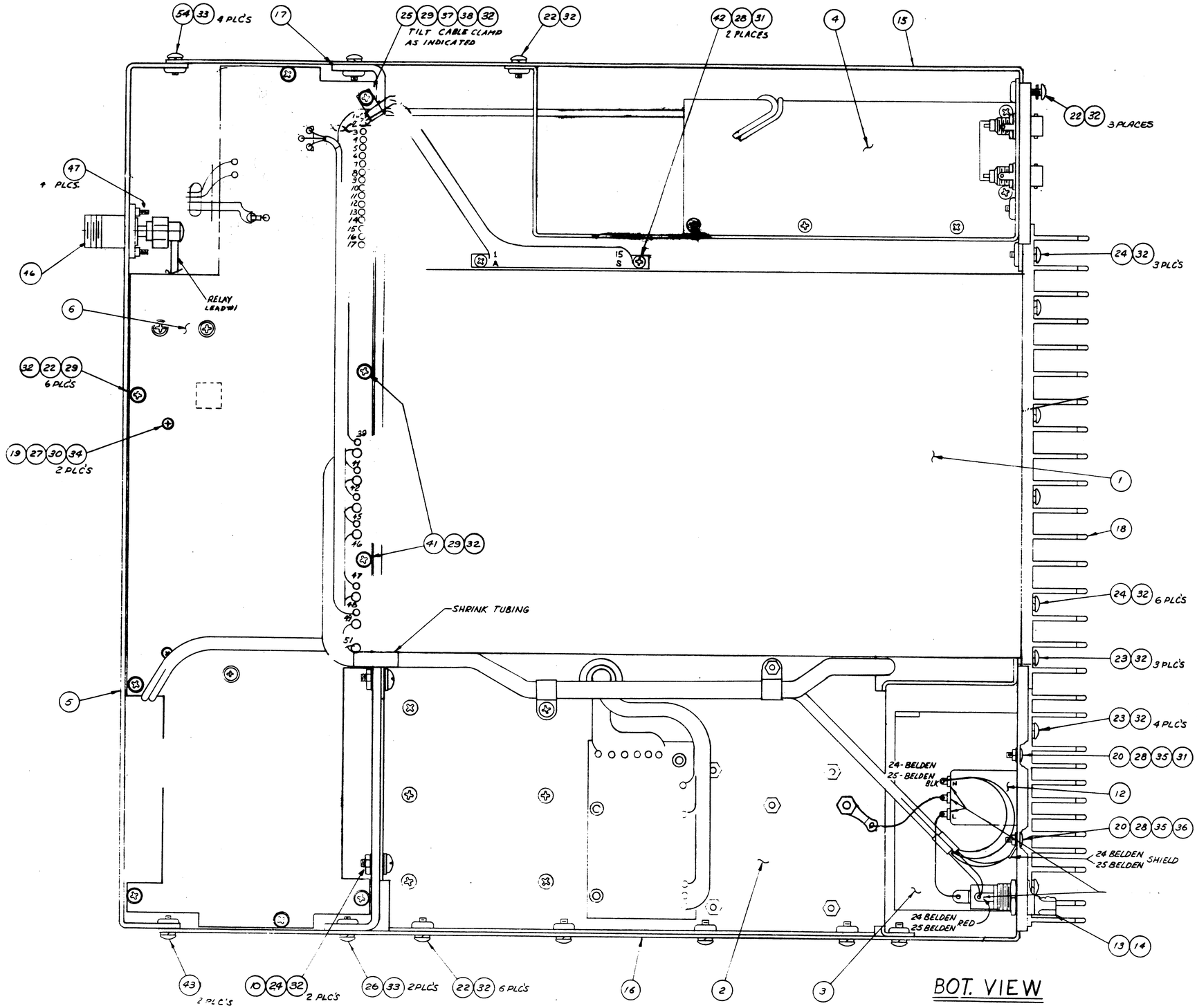

FIGURE 7-1A
TEST
ASSEMBLY 057586
(Sheet 1 of 2)

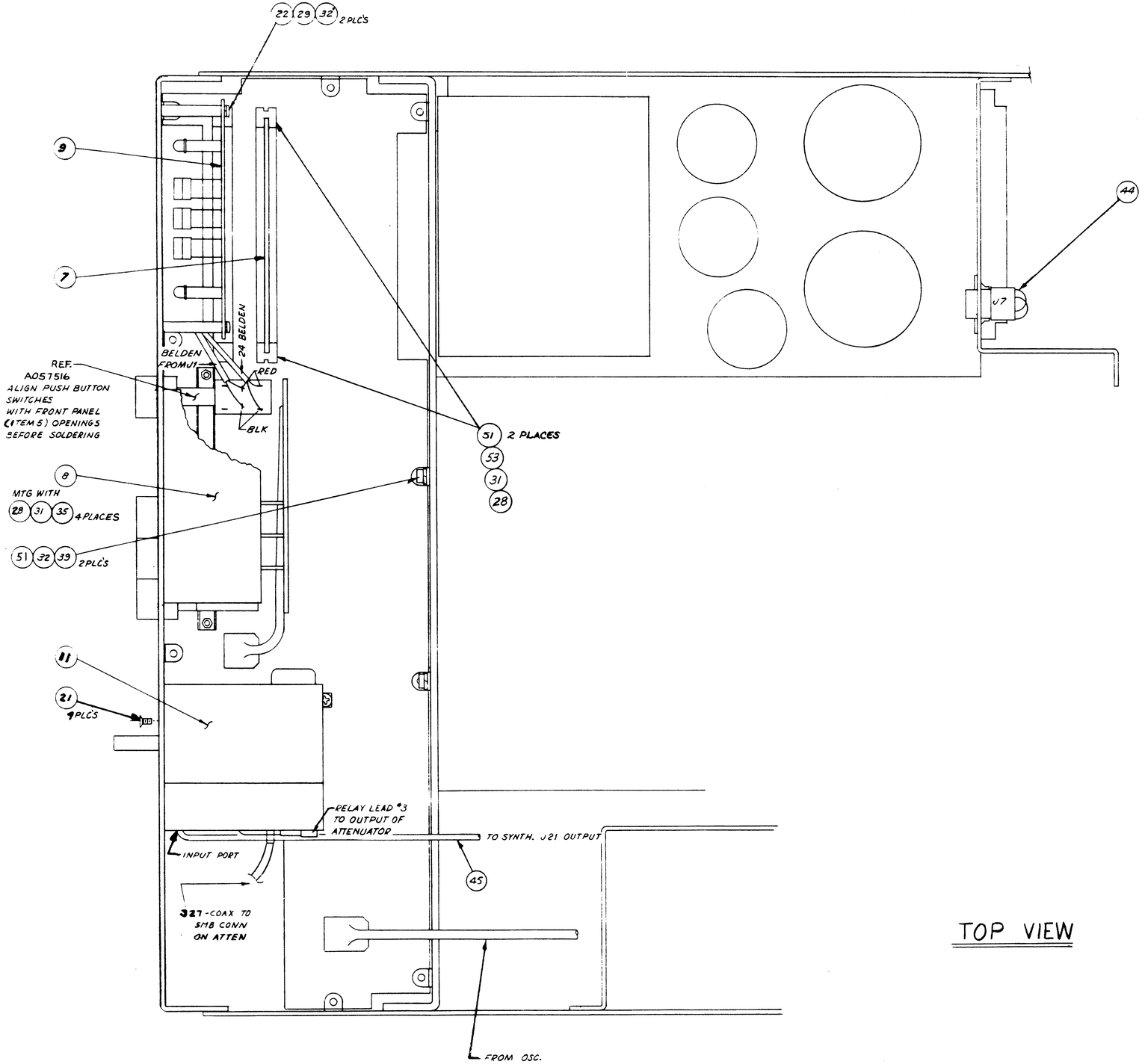

TOP VIEW

FIGURE 7-1B
TEST
ASSEMBLY 057586
(Sheet 2 of 2)

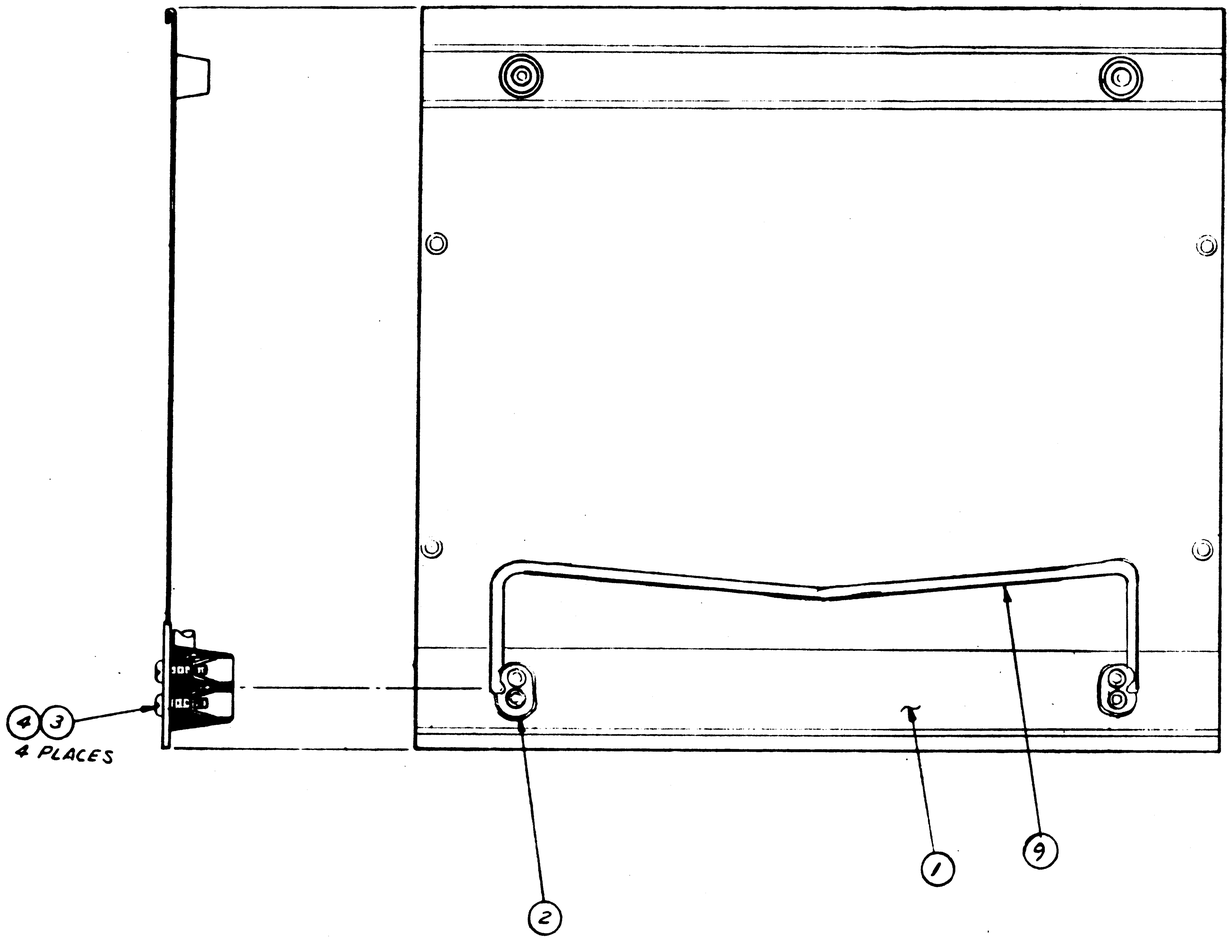

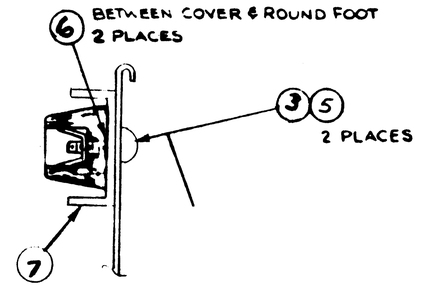

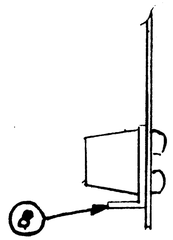

FIGURE 7-2
BOTTOM COVER
ASSEMBLY 067310

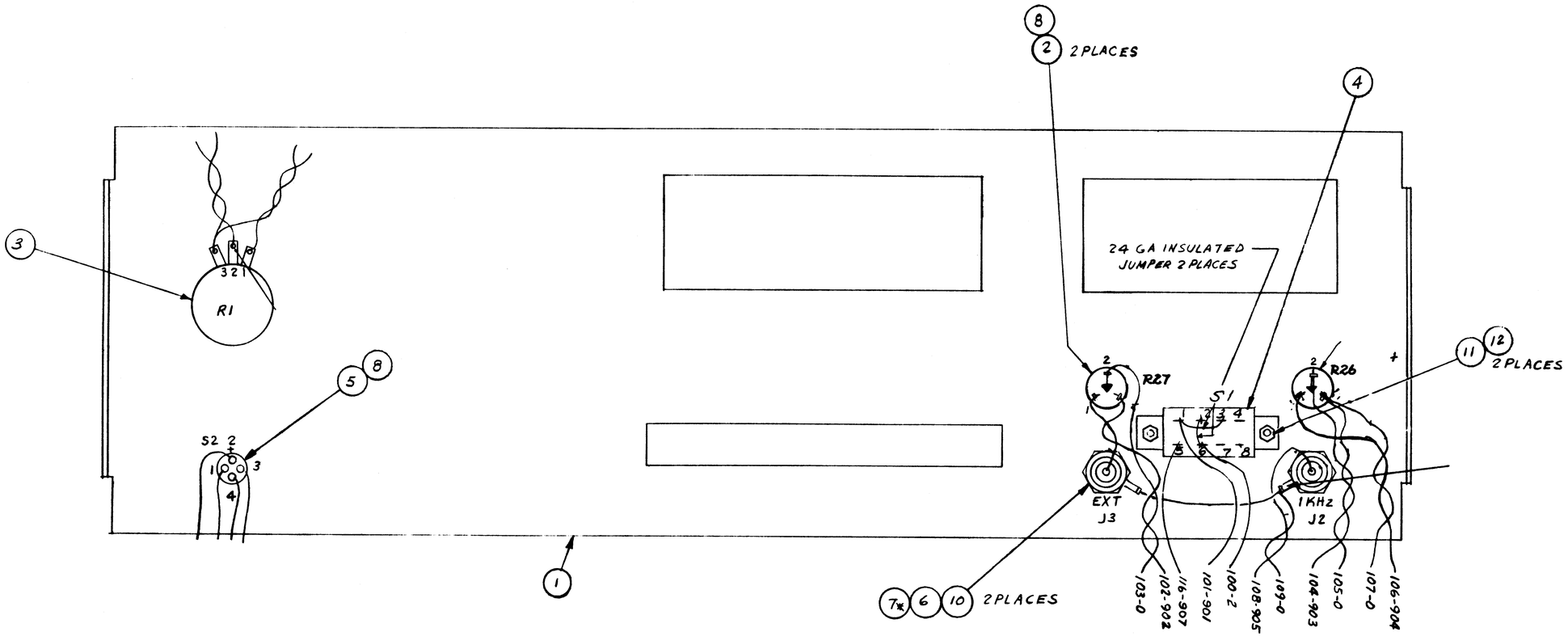

FIGURE 7-3
A1A1, FRONT PANEL
ASSEMBLY 057585

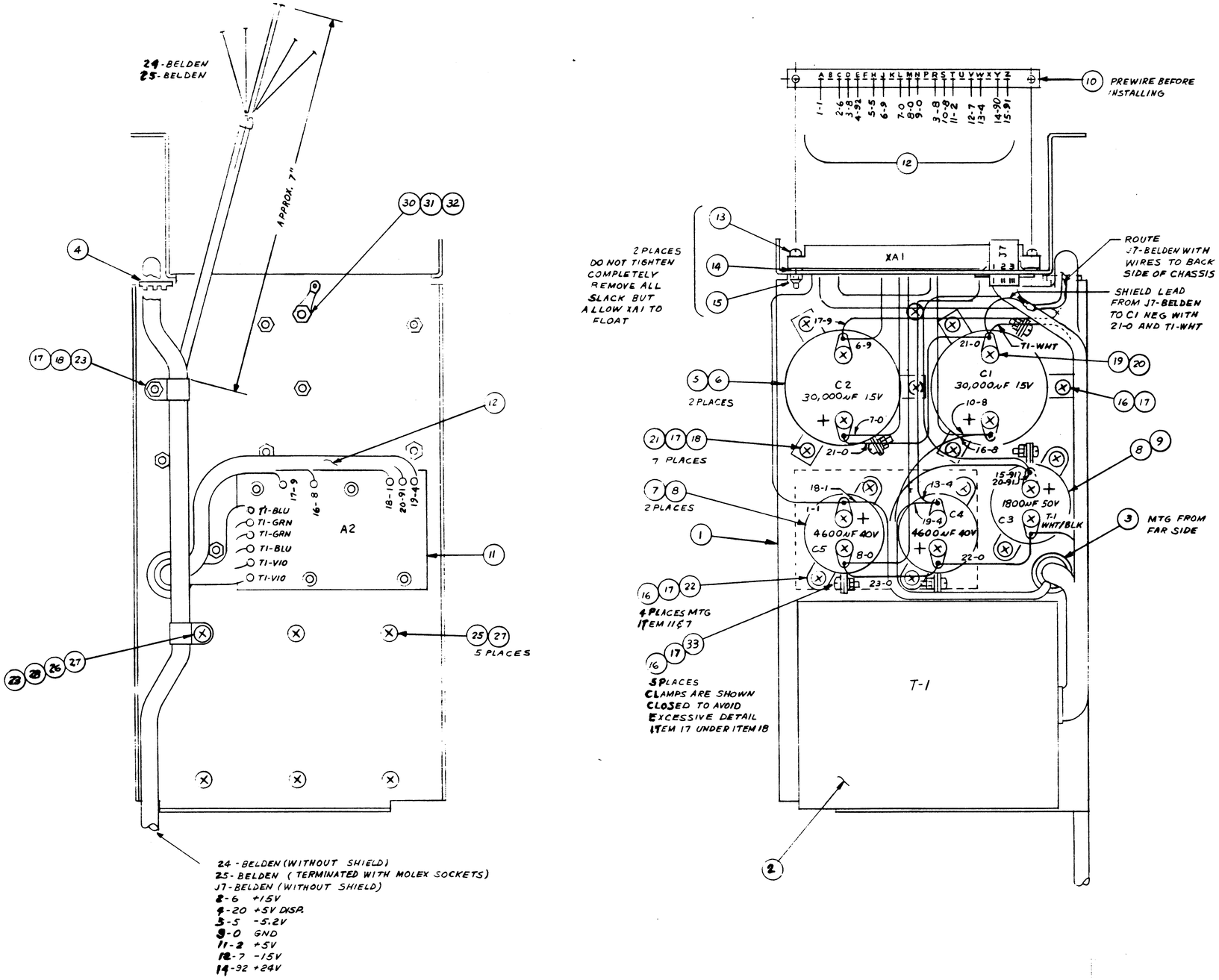

FIGURE 7-4
A2A1, POWER SUPPLY
SUBASSEMBLY 07559

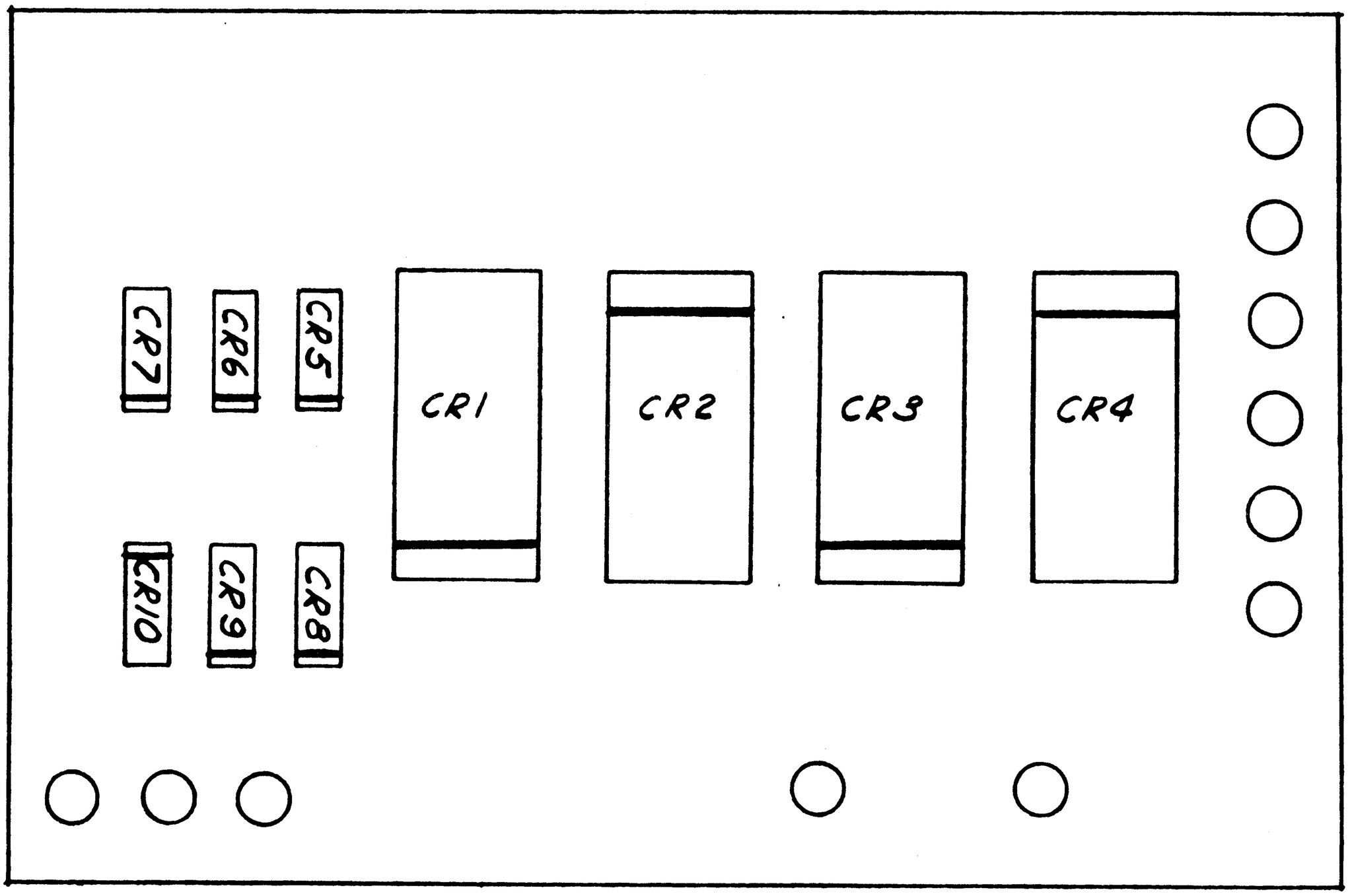

FIGURE 7-5
A2A2, RECTIFIER PCB
ASSEMBLY 05760601

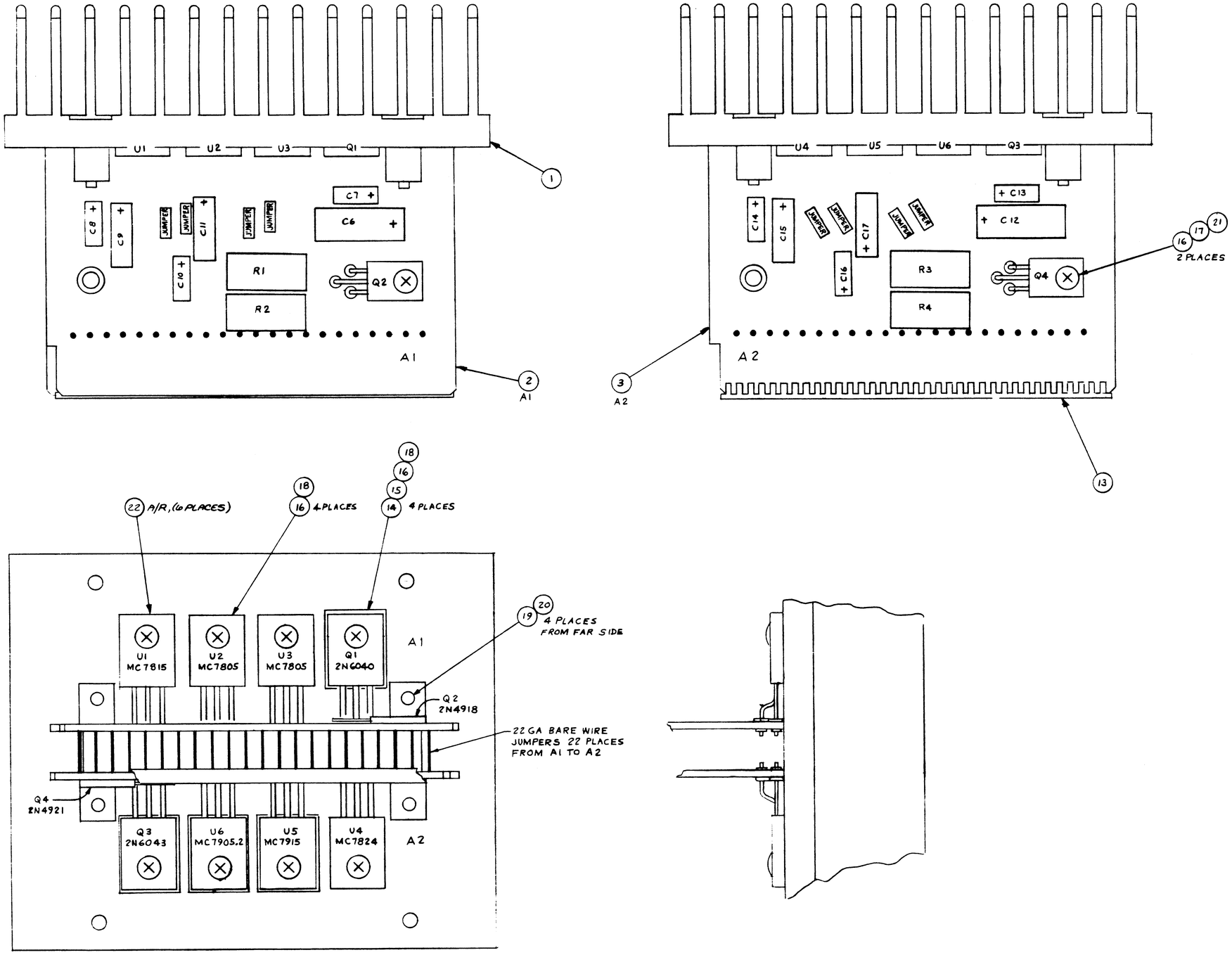

FIGURE 7-6
A2A3, POWER REGULATOR PLUG-IN
ASSEMBLY 057646

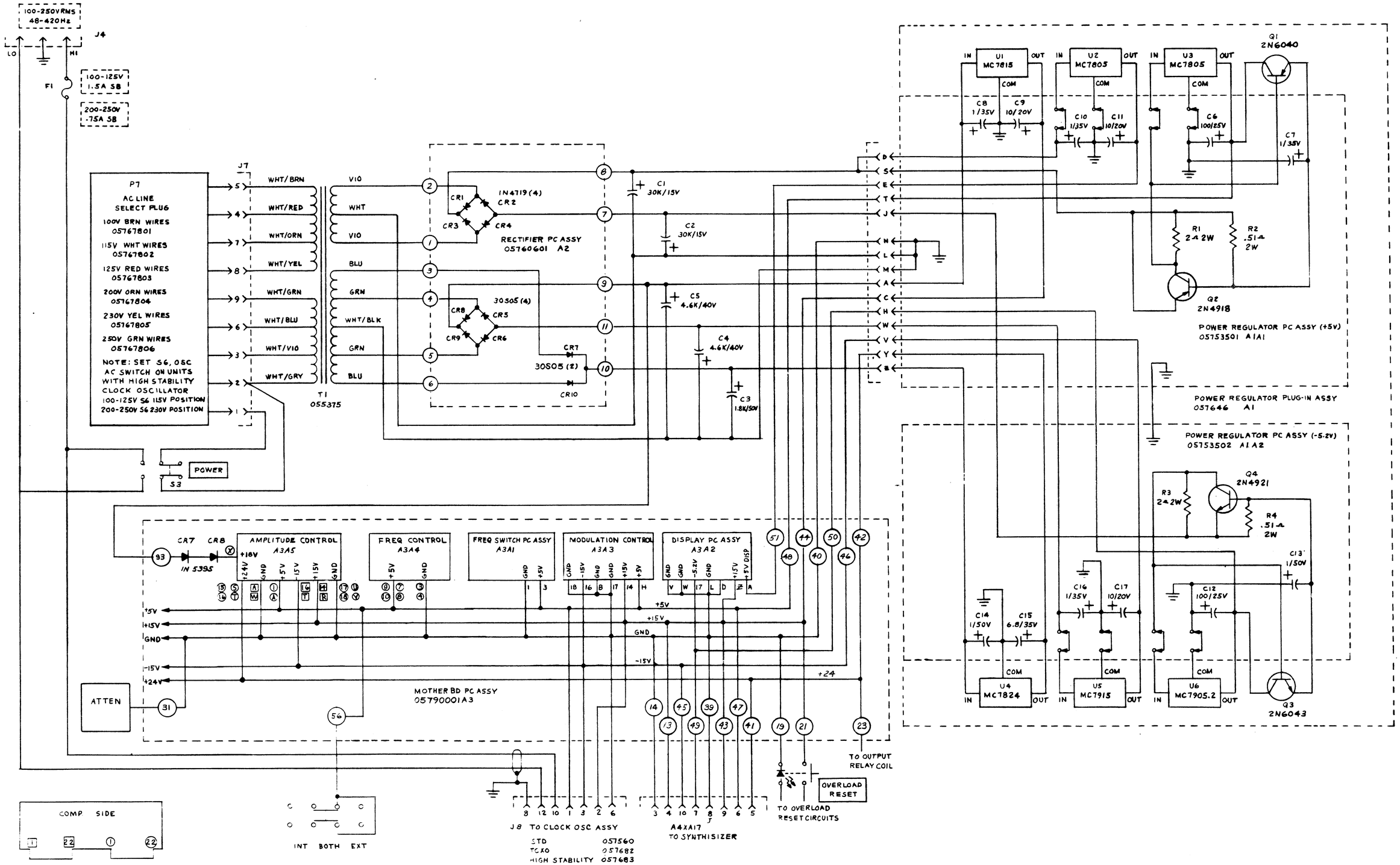

FIGURE 7-7
A2, POWER SUPPLY
SCHEMATIC 7-057684

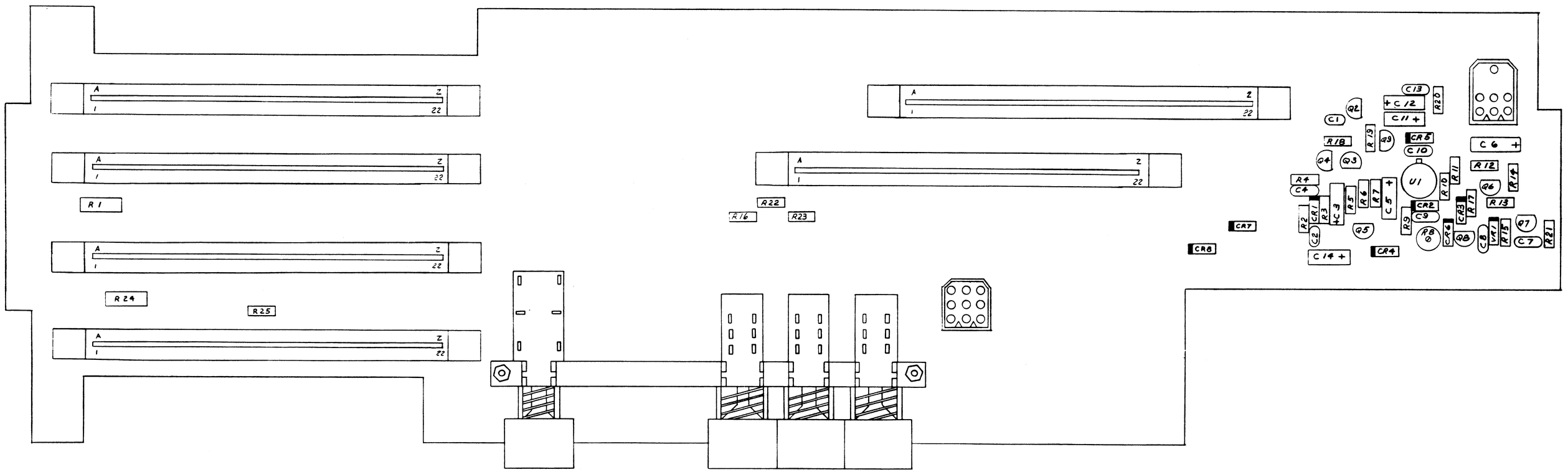

FIGURE 7-8
A3, MOTHERBOARD PCB
ASSEMBLY 05790001

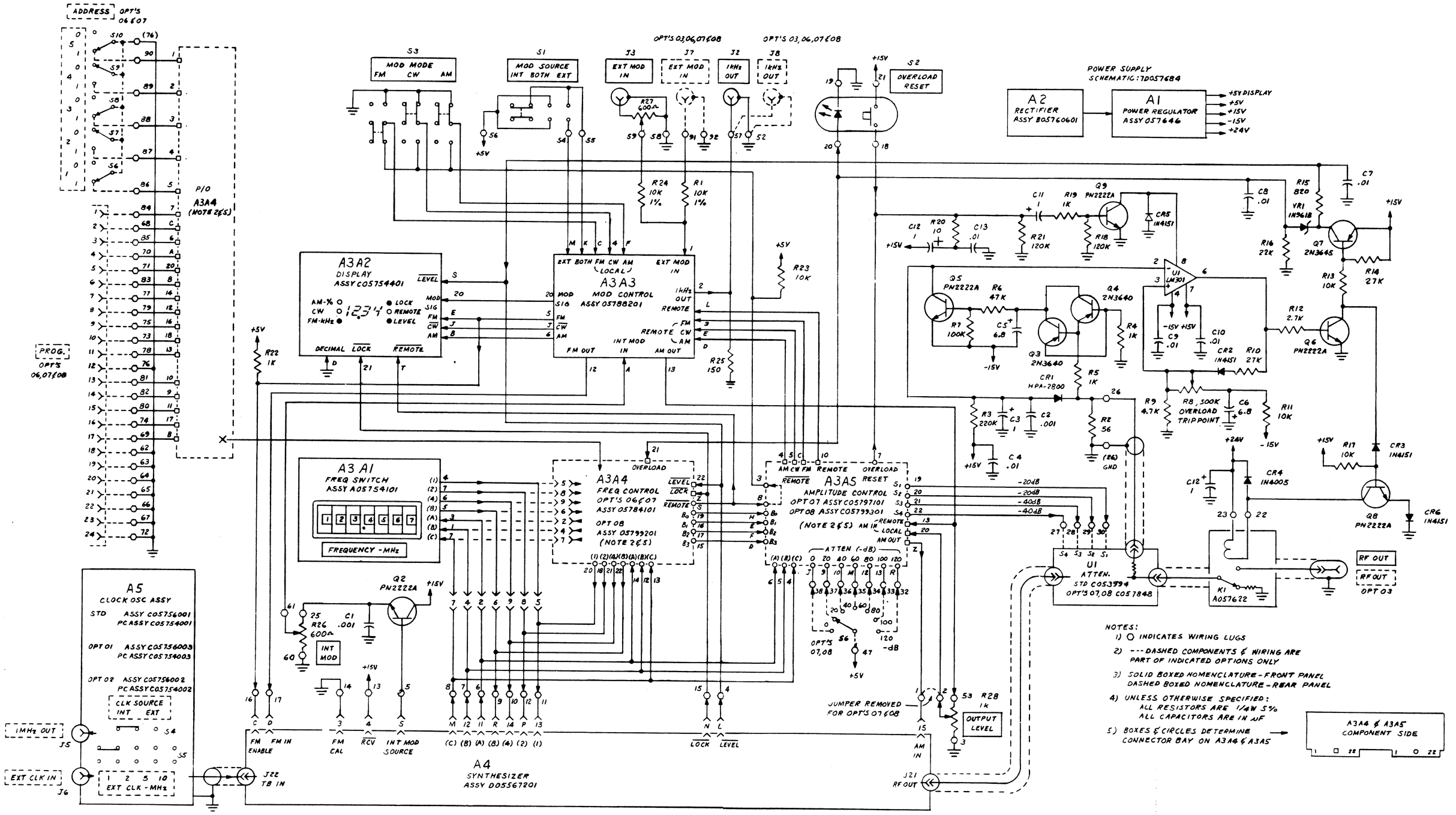

FIGURE 7-9
A3, MOTHERBOARD PCB
SCHEMATIC 7-05790001

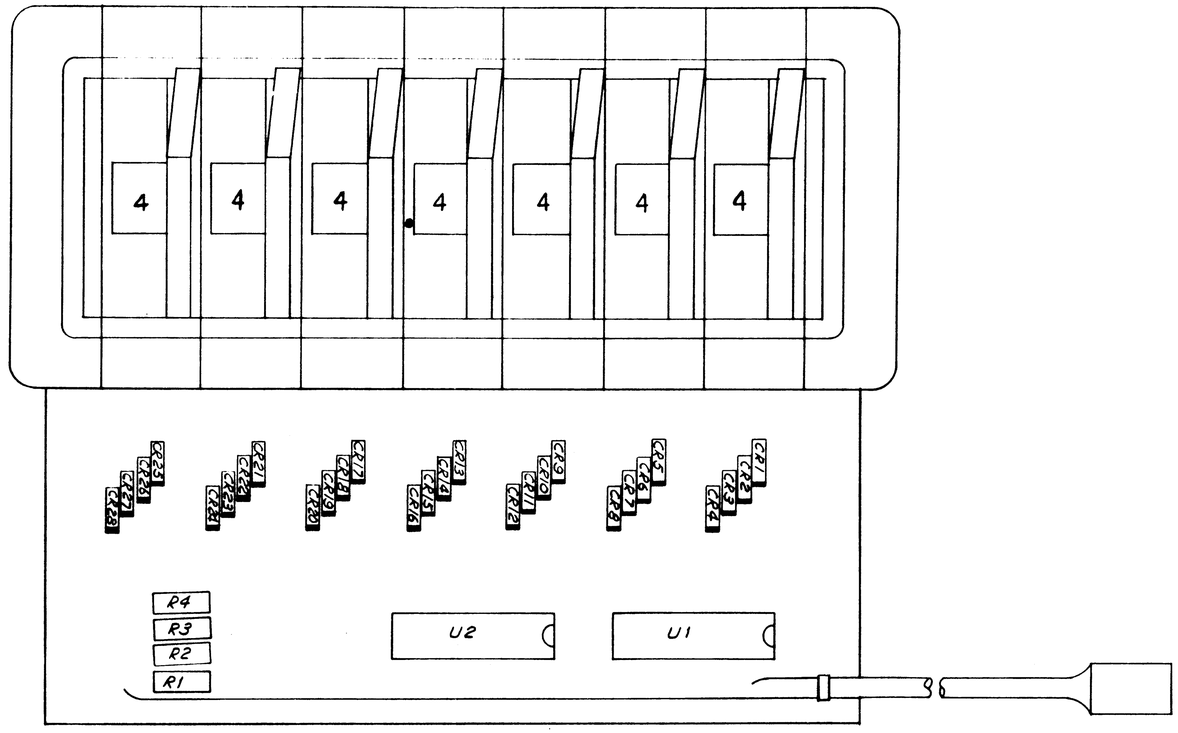

FIGURE 7-10
A3A1, FREQUENCY SWITCH PCB
ASSEMBLY 05754101

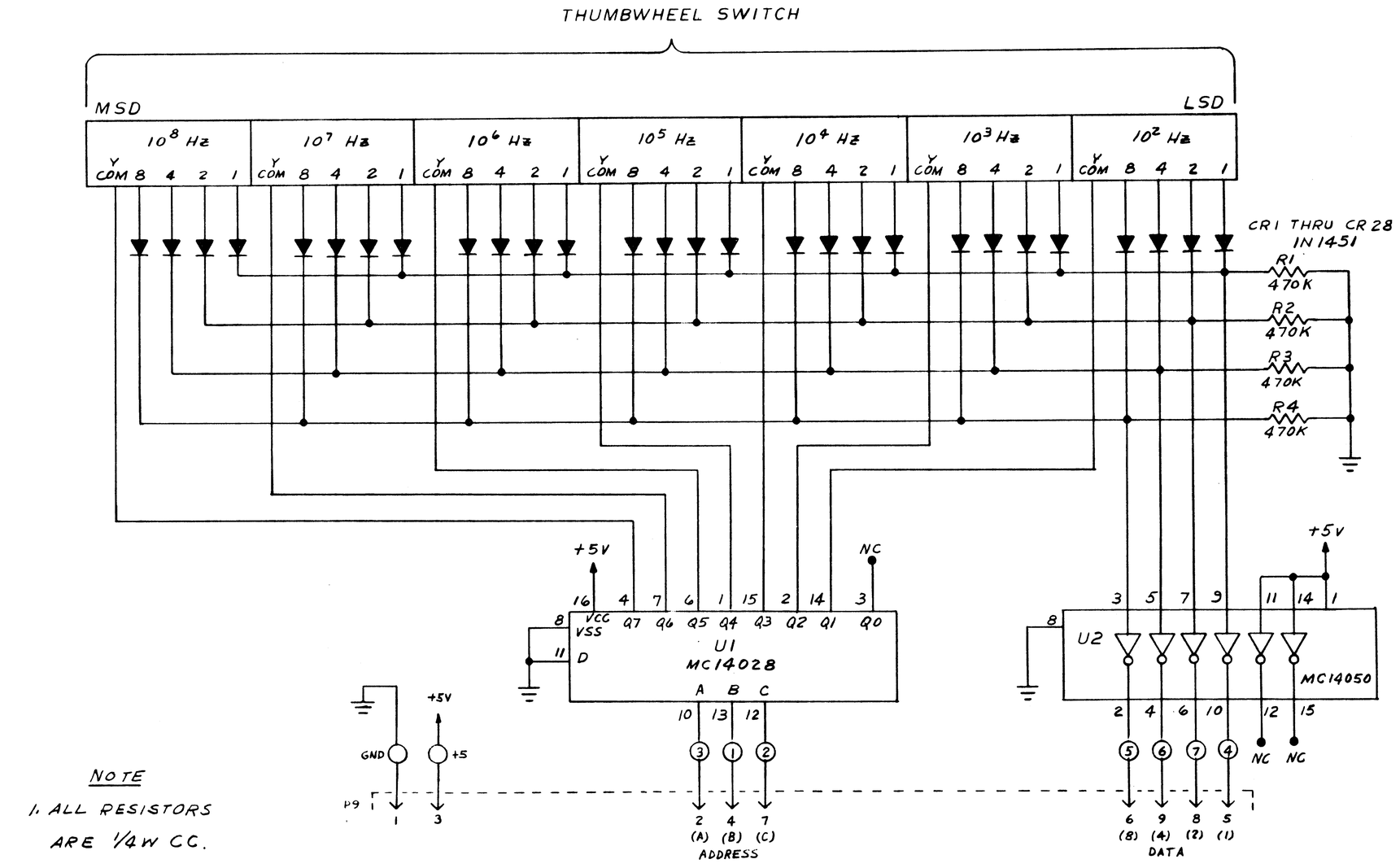

FIGURE 7-11
A3A1, FREQUENCY SWITCH PCB
SCHEMATIC 7-05754101

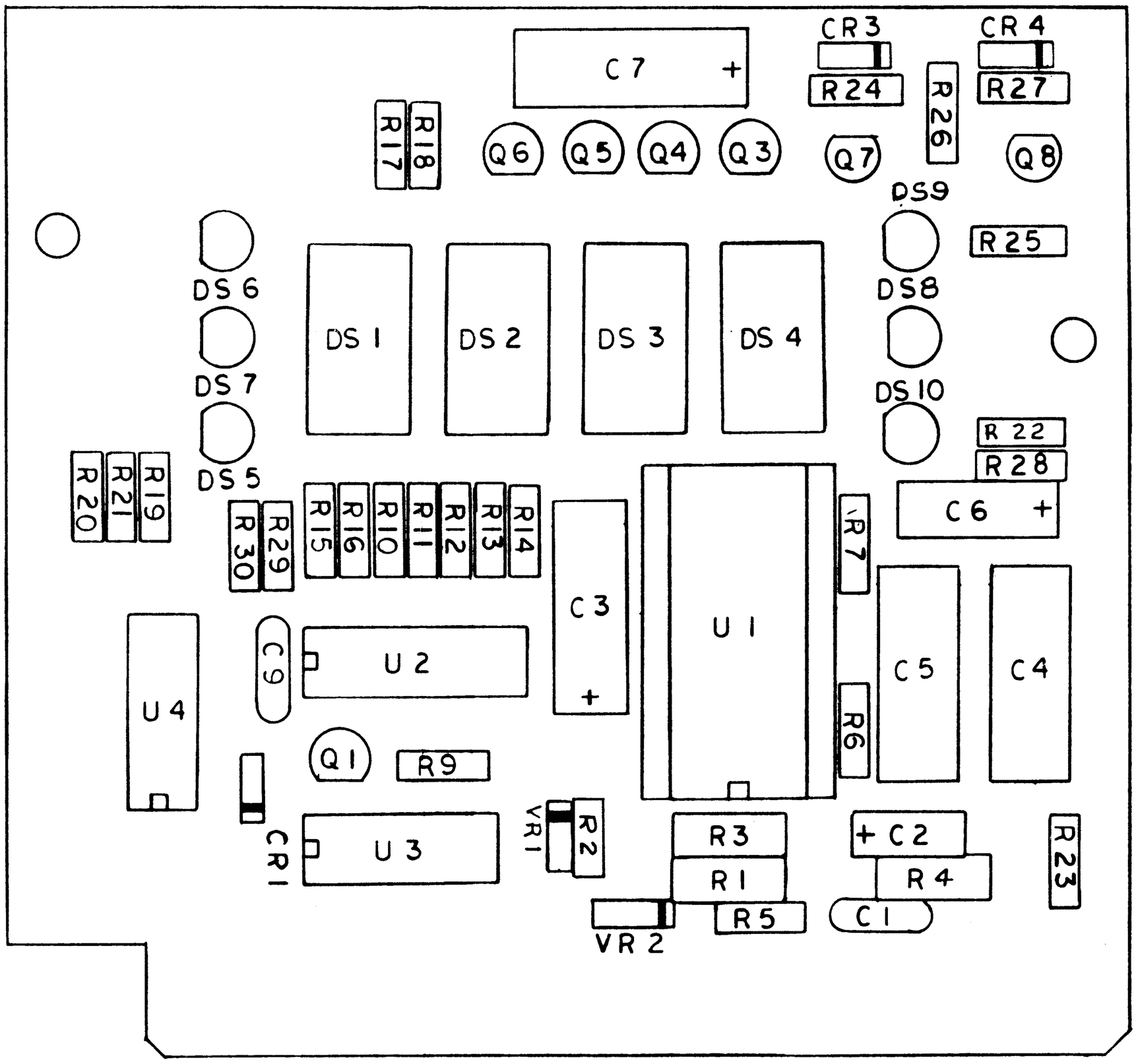

FIGURE 7-12
A3A2, DISPLAY PCB
ASSEMBLY 05754401

IC	DESCRIPTION	+5V	GND.
U1	MC14433	–	–
U2	SN74LS247N	16	8
U3	MC14013	14	7
U4	MC3002P	14	7

NOTES:
UNLESS OTHERWISE SPECIFIED:
1. ALL RESISTORS ARE IN OHMS, 1/4W, 5%
2. ALL CAPACITORS ARE IN µF.

FIGURE 7-13
A3A2, DISPLAY PCB
SCHEMATIC 7-05754401

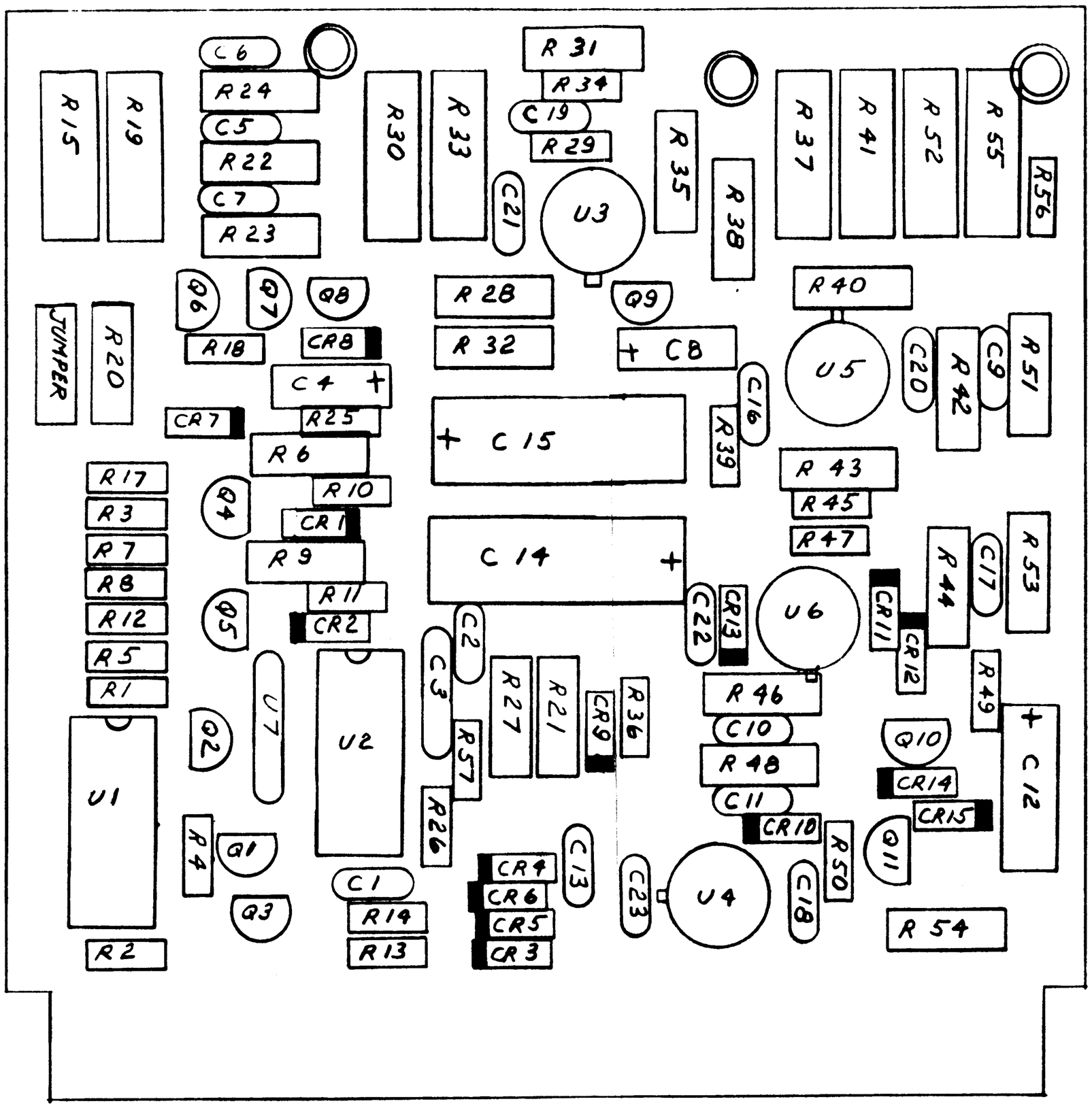

FIGURE 7-14
A3A3, MODULATION CONTROL PCB
ASSEMBLY 05788201

INTEGRATED CIRCUIT TABULATION					
U NO.	TYPE	+5V	+15V	GND	-15V
U1	MC 14071	14		7	
U2	LM 324		4		11
U3	LM 747		2&8		5
U4	LM 301A		7		4
U5	LF 355		7		4
U6	LM 747		2&8		5
U7	4-12K 1W	3			

NOTES:

1) UNLESS OTHERWISE SPECIFIED:
   A. ALL RESISTORS ARE 50 ppm METAL FILM.
   B. 5% RESISTORS ARE 5% 1/4 w CARBON
   C. ALL CAPACITORS ARE IN μF.

FIGURE 7-15
A3A3, MODULATION CONTROL PCB
SCHEMATIC 7-05788201

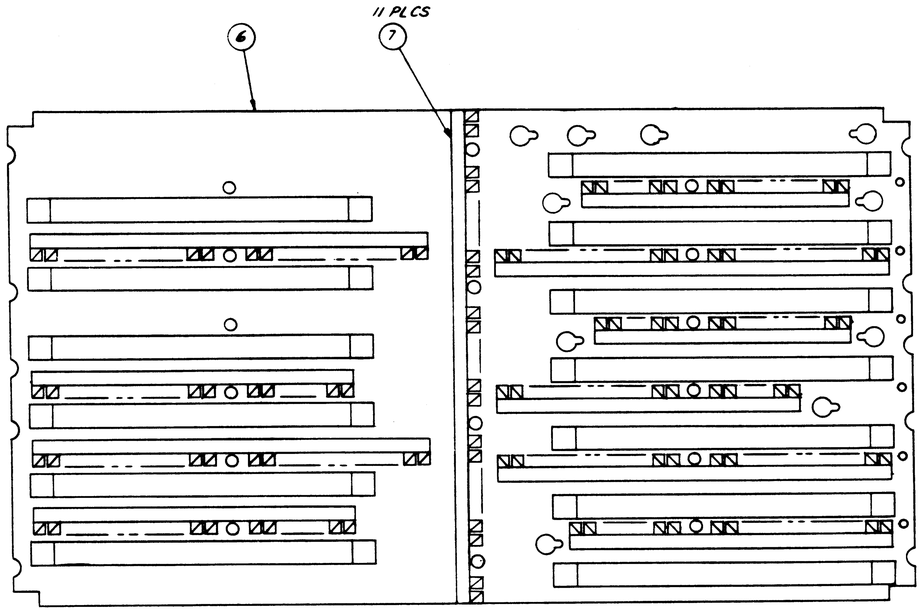

FIG. 1

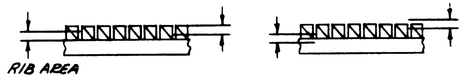

RIB TO FINGER STOCK CONTACT TOLERANCE

ITEM NO.	QTY	PART NUMBER	DESCRIPTION	SCHEMATIC REF. NO.
37	1	075501	GASKET, SYNTHESIZER	
36	21	10063206	SCREW PHMS #6-32 X 3/8	
35	1	05392901	PC ASSY AMPLIFIER	SEP P/L A14
34	1	05797001	PC ASSY SOURCE 5	SEP P/L A13
33	1	05538501	PC ASSY PHASE DETECTOR	SEP P/L A12
32	1	05372401	PC ASSY SOURCE 4	SEP P/L A11
31	1	05567001	PC ASSY ÷N	SEP P/L A10
30	1	05567101	PC ASSY LOGIC	SEP P/L A9
29	1	05566801	PC ASSY 400MHz REF. GEN.	SEP P/L A8
28	1	05373501	PC ASSY SOURCE 3	SEP P/L A6
27	1	05362401	PC ASSY SOURCE 2	SEP P/L A5
26	1	05395401	PC ASSY TIME BASE	SEP P/L A4
25	1	05537401	PC ASSY DC DISCRIMINATOR	SEP P/L A3
24	1	05566201	PC ASSY 10MHz VCO	SEP P/L A2
23	1	05563901	PC ASSY AC DISCRIMINATOR	SEP P/L A1
22	38	100712	WASHER, SPLIT LOCK #6	
21	4	100704	WASHER, FLAT #6	
20	12	100711	WASHER, SPLIT LOCK #4	
18	6	100661	WASHER, SPLIT LOCK #2	
17	6	100614	WASHER, FLAT #2	
16	22	10073105	SCREW FHMS #6-32 x 5/16	
15	6	10063207	SCREW PHMS #6-32 x 7/16	
14	27	10063205	SCREW PHMS #6-32 x 5/16	
13	4	10063204	SCREW PHMS #6-32 x 1/4	
12	12	10062605	SCREW PHMS #4-40 x 5/16	
11	6	10062505	SCREW PHMS #2-56 x 5/16	
10	1	10063204	SCREW PHMS #6-32 x 1/4	
9	1	055679	HEATSINK	
8	A/R	103274	GASKET, RFI, ROUND	
7	A/R	101053	FINGER STOCK	
6	1	06738001	MOTHER BD PC ASSY	A15
5	1	057402	TOP COVER	
4	1	055976	BOTTOM COVER	
3	1	057435	RIGHT GUSSET, SYN.	
2	1	057438	LEFT GUSSET ASSY	
1	1	055929	SYN. BOX MECH. ASSY	

FIG. 2

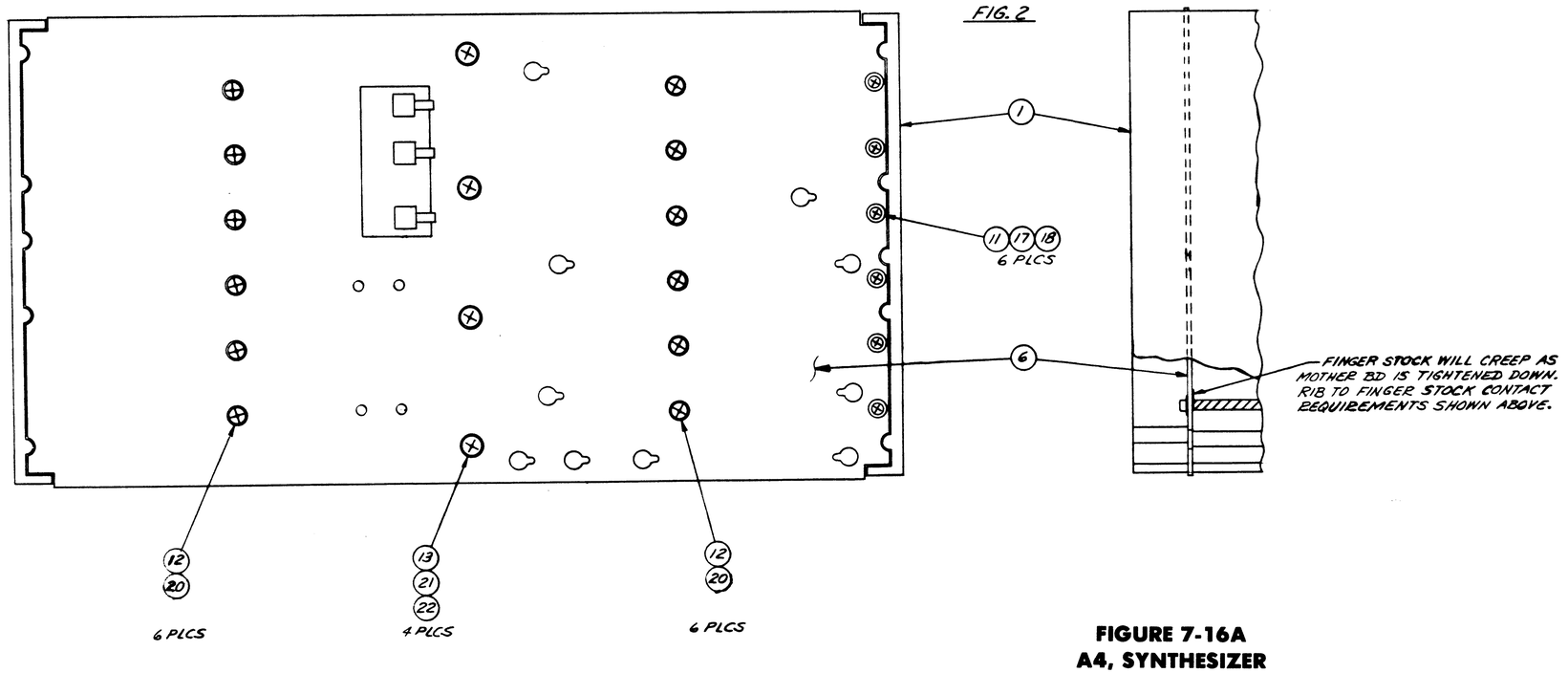

FIGURE 7-16A
A4, SYNTHESIZER
ASSEMBLY 06789
(Sheet 1 of 3)

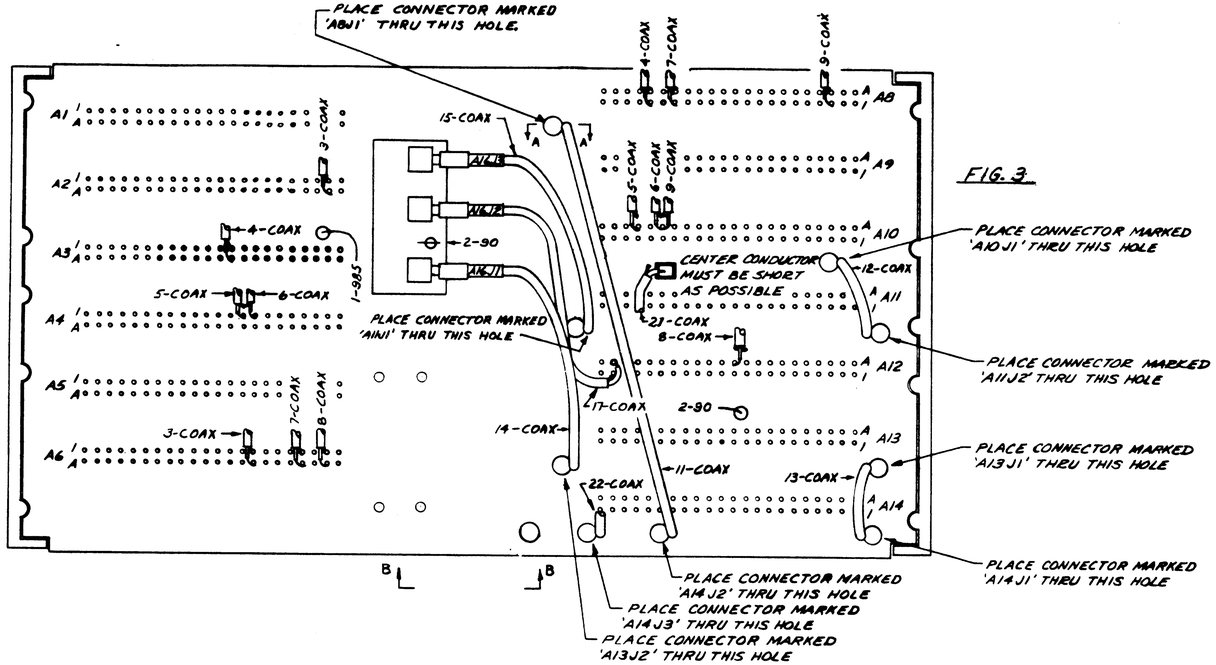

FIG. 3

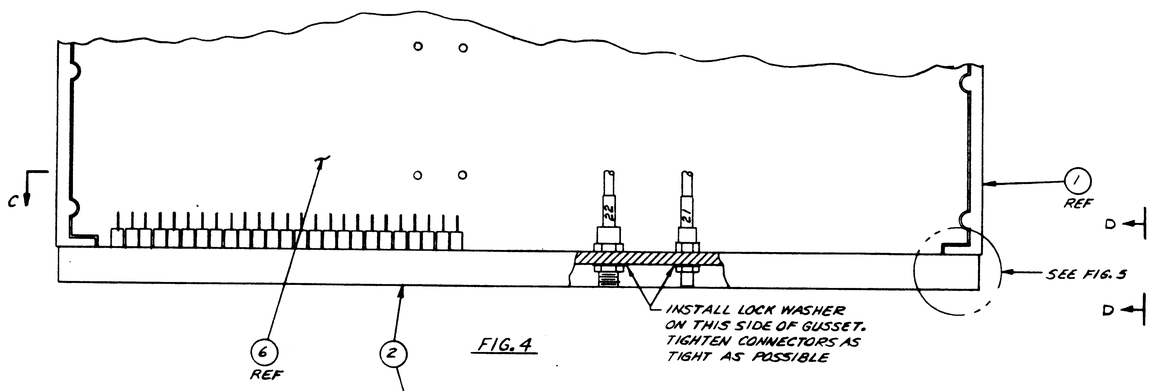

FIG. 4

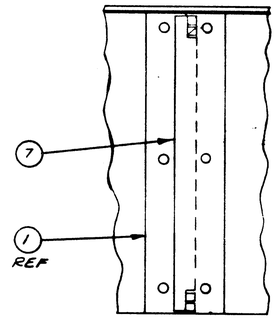

VIEW B-B
TYP. 2 PLACES

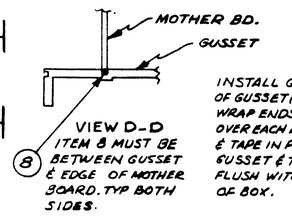

VIEW D-D
ITEM 8 MUST BE BETWEEN GUSSET & EDGE OF MOTHER BOARD. TYP BOTH SIDES.

INSTALL GASKET IN SLOT OF GUSSET (BOTH SIDES). WRAP ENDS OF GASKET OVER EACH END OF GUSSET & TAPE IN PLACE. MOUNT GUSSET & TRIM GASKET FLUSH WITH BOTH ENDS OF BOX.

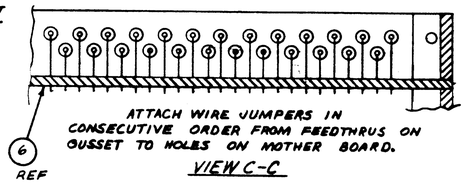

VIEW C-C

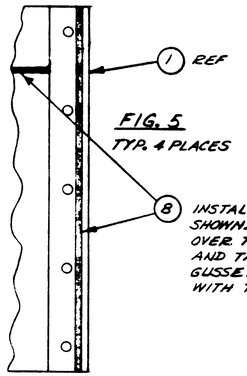

FIG. 5
TYP. 4 PLACES

INSTALL GASKET APPROX. AS SHOWN. WRAP ENDS OF GASKET OVER TOP & BOTTOM OF SYN. BOX AND TAPE IN PLACE. MOUNT GUSSET & TRIM GASKET FLUSH WITH TOP & BOTTOM.

FIGURE 7-16B
A4, SYNTHESIZER ASSEMBLY 06789
(Sheet 2 of 3)

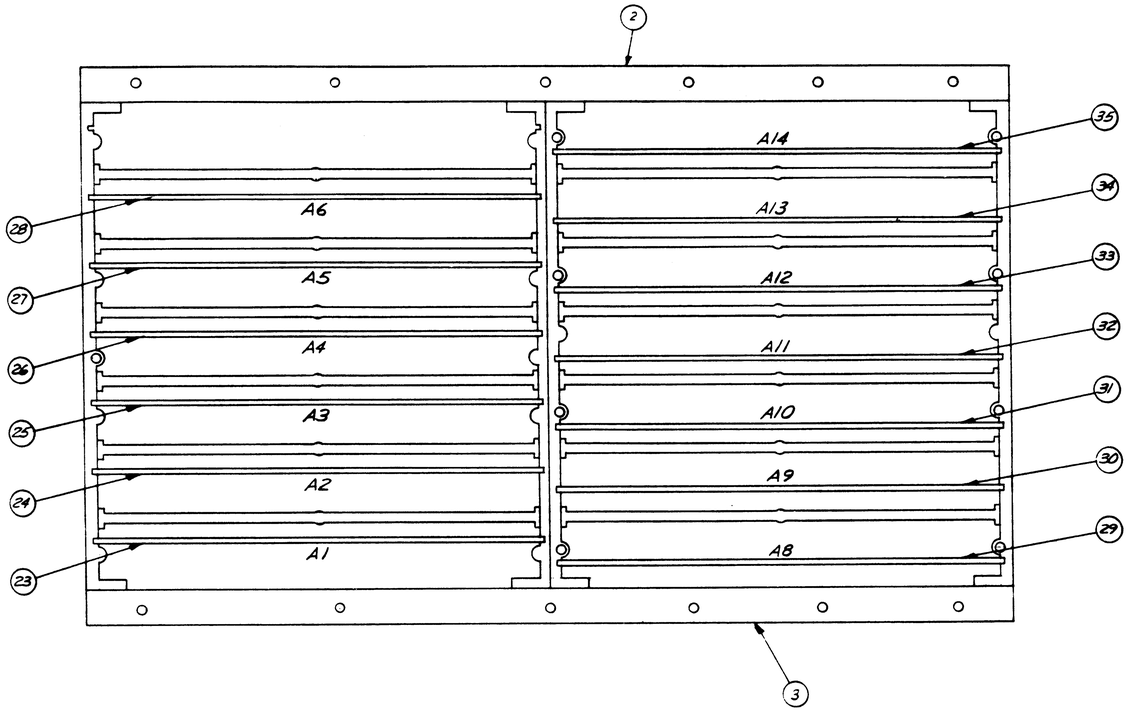

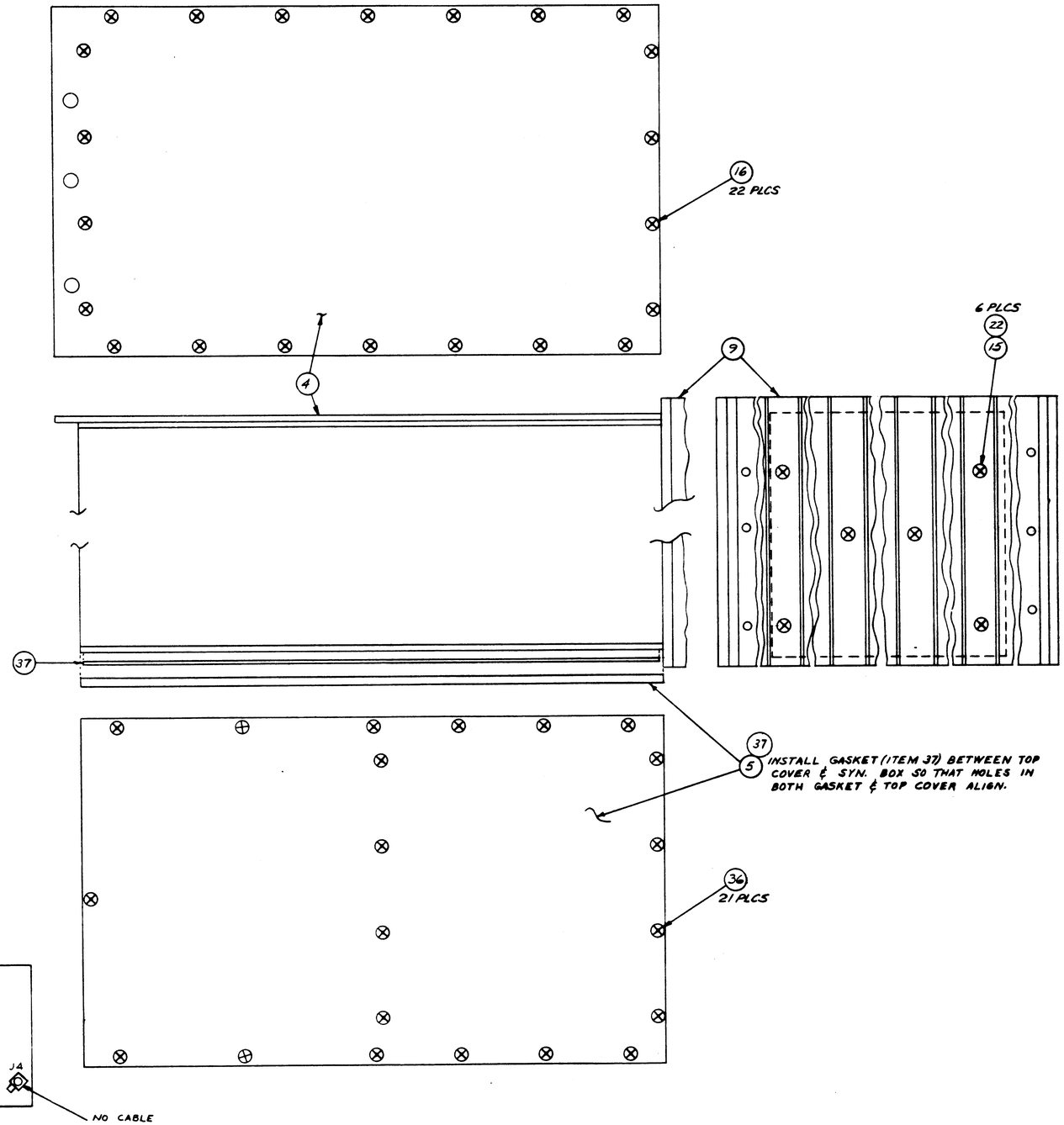

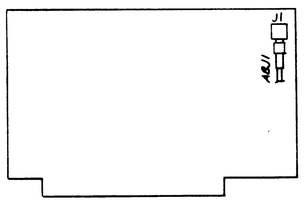

A8
400MHz REF. GEN.

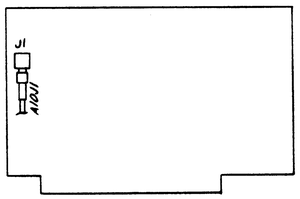

A10
÷N

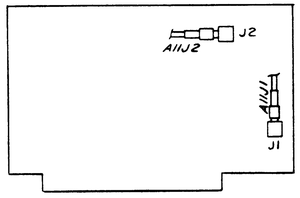

A11
SOURCE #4

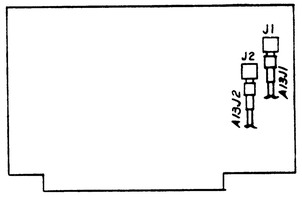

A13
SOURCE #5

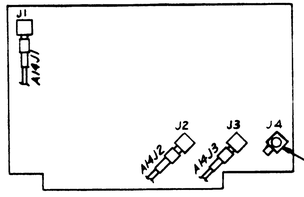

A14
AMPLIFIER

FIGURE 7-16C
A4, SYNTHESIZER
ASSEMBLY 06789
(Sheet 3 of 3)

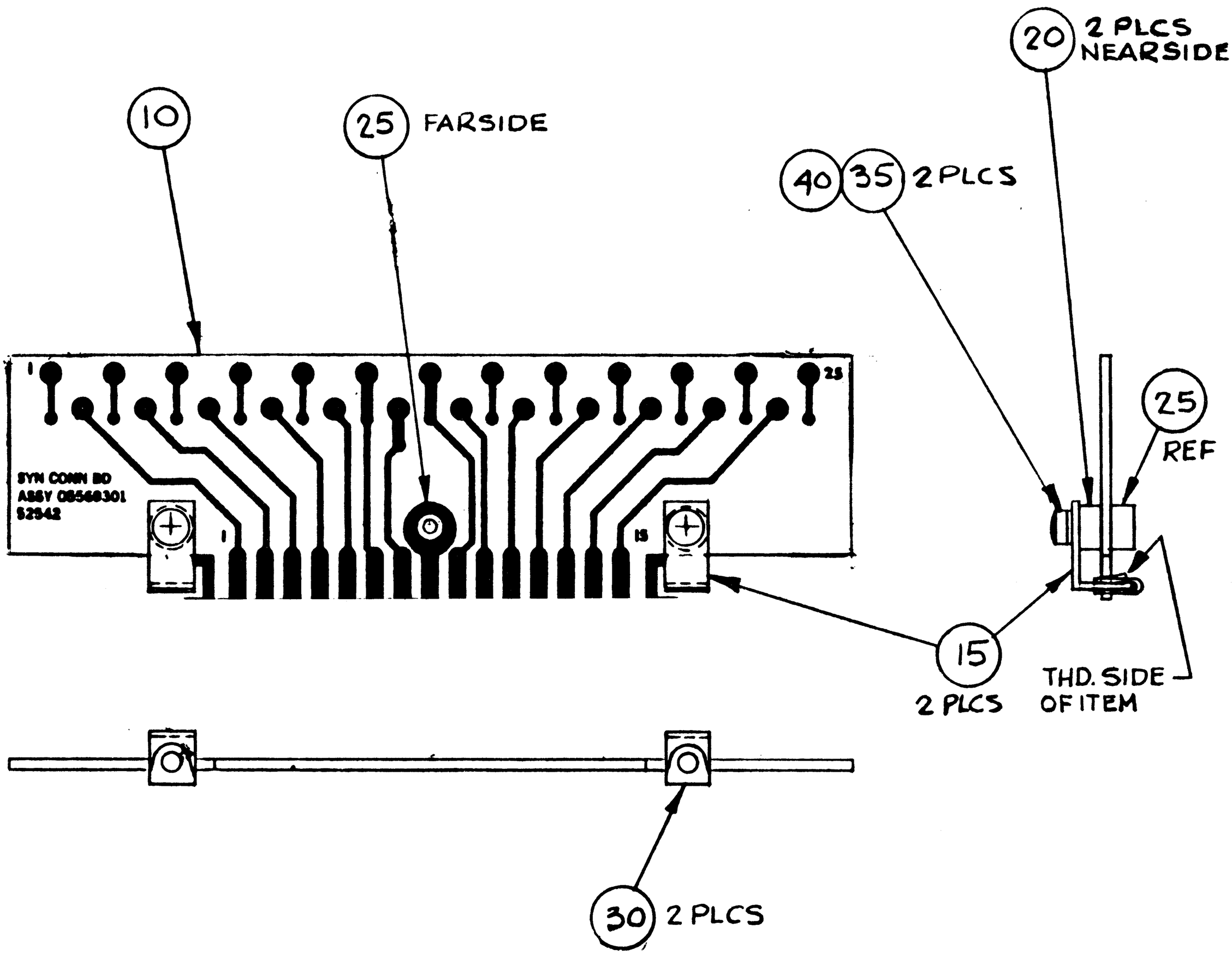

FIGURE 7-17
A4A17, SYNTHESIZER
CONNECTION PCB
ASSEMBLY 05569301

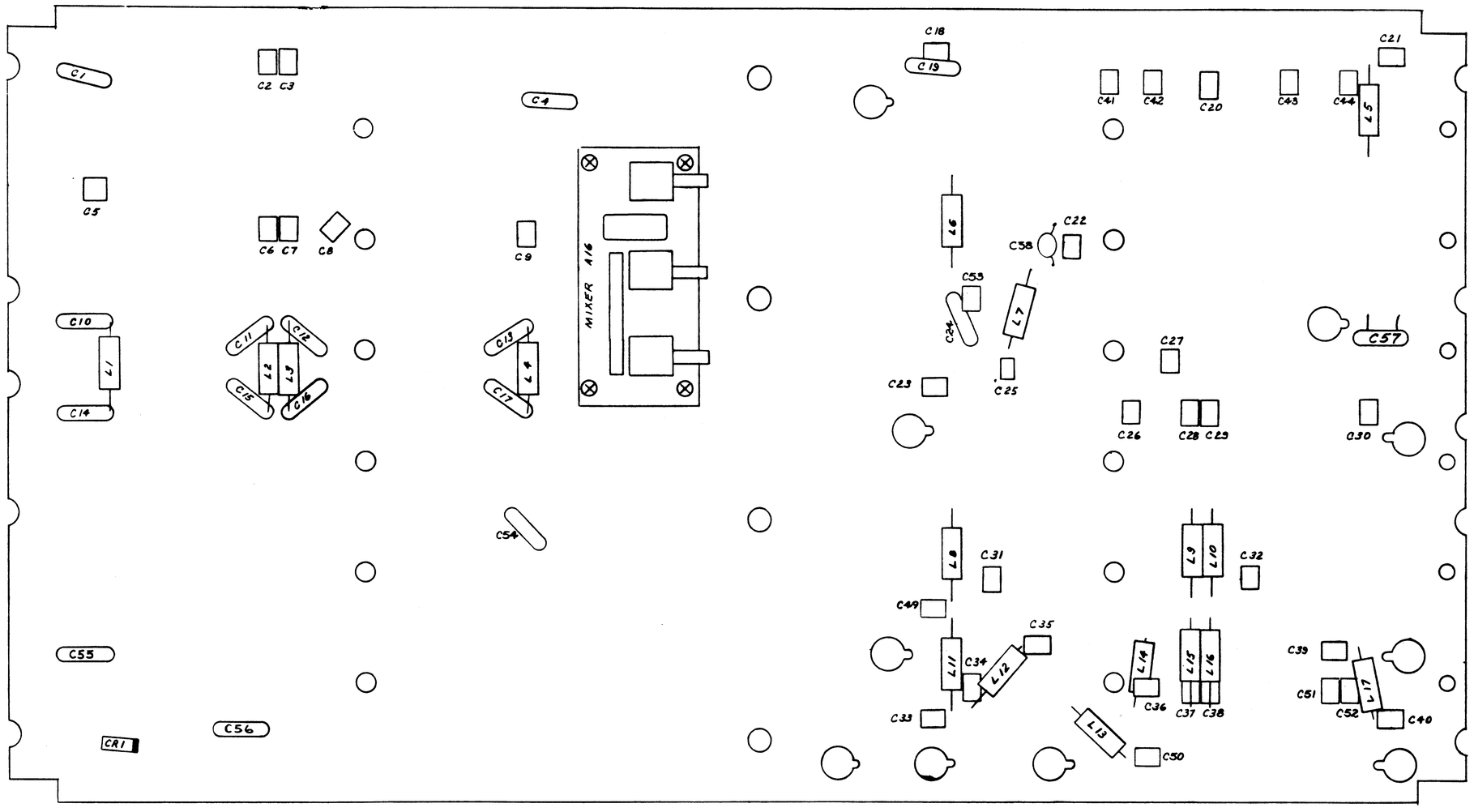

FIGURE 7-18
A4A15, SYNTHESIZER
MOTHERBOARD PCB
ASSEMBLY 06738001

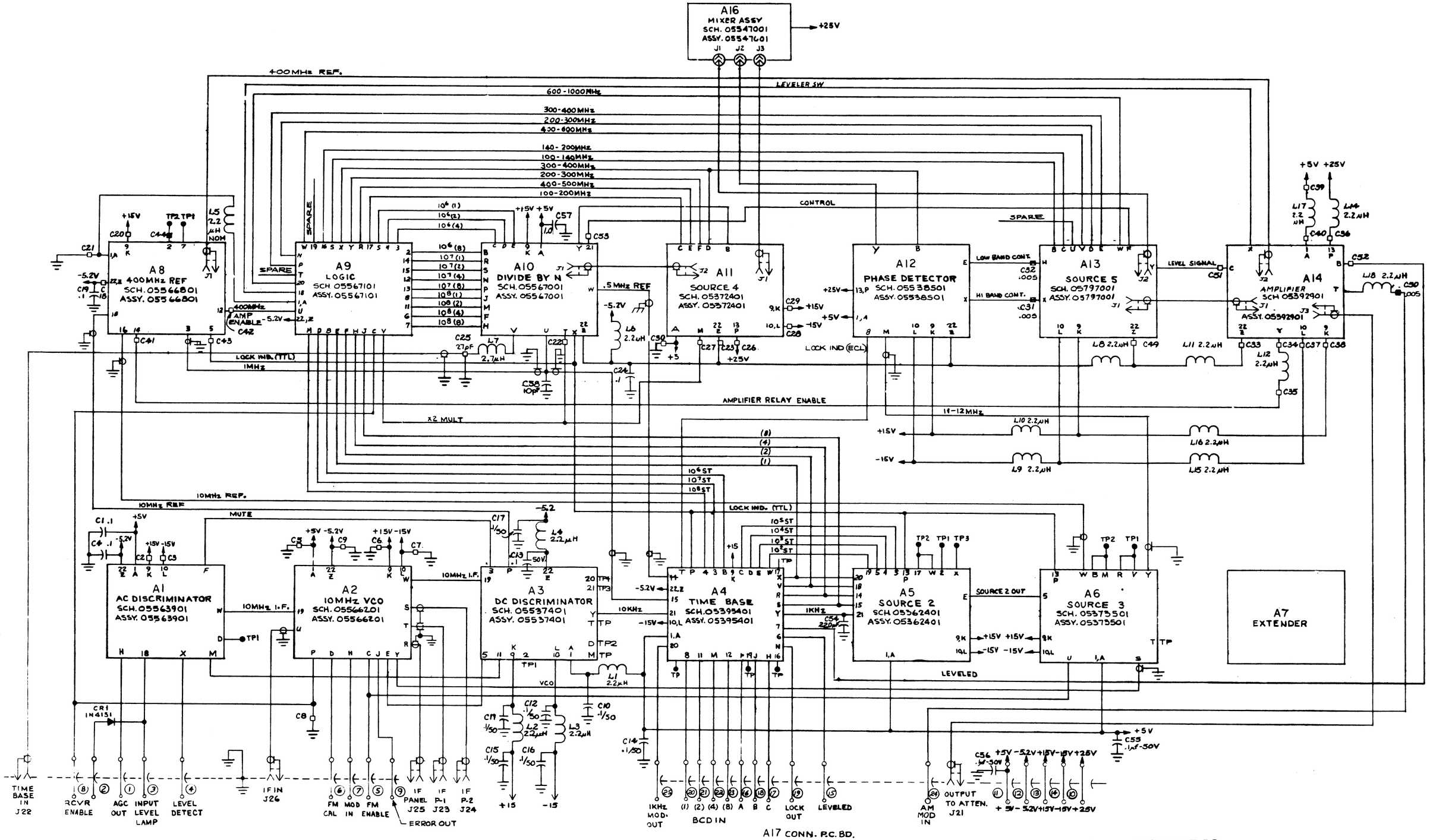

NOTES
1) □ INDICATES .056μF EXCEPT WHERE MARKED CHIP CAP FROM PC CONNECTOR PIN TO GND.
2) ALL UNUSED PC CONNECTOR PINS ARE GND.
3) ALL COAXIAL WIRE ARE GROUNDED TO MOTHER BD.
4) ⊠ INDICATES CHIP CAP THAT ARE .005μF.

FIGURE 7-19
A4A15, SYNTHESIZER MOTHERBOARD PCB SCHEMATIC 7-06738001

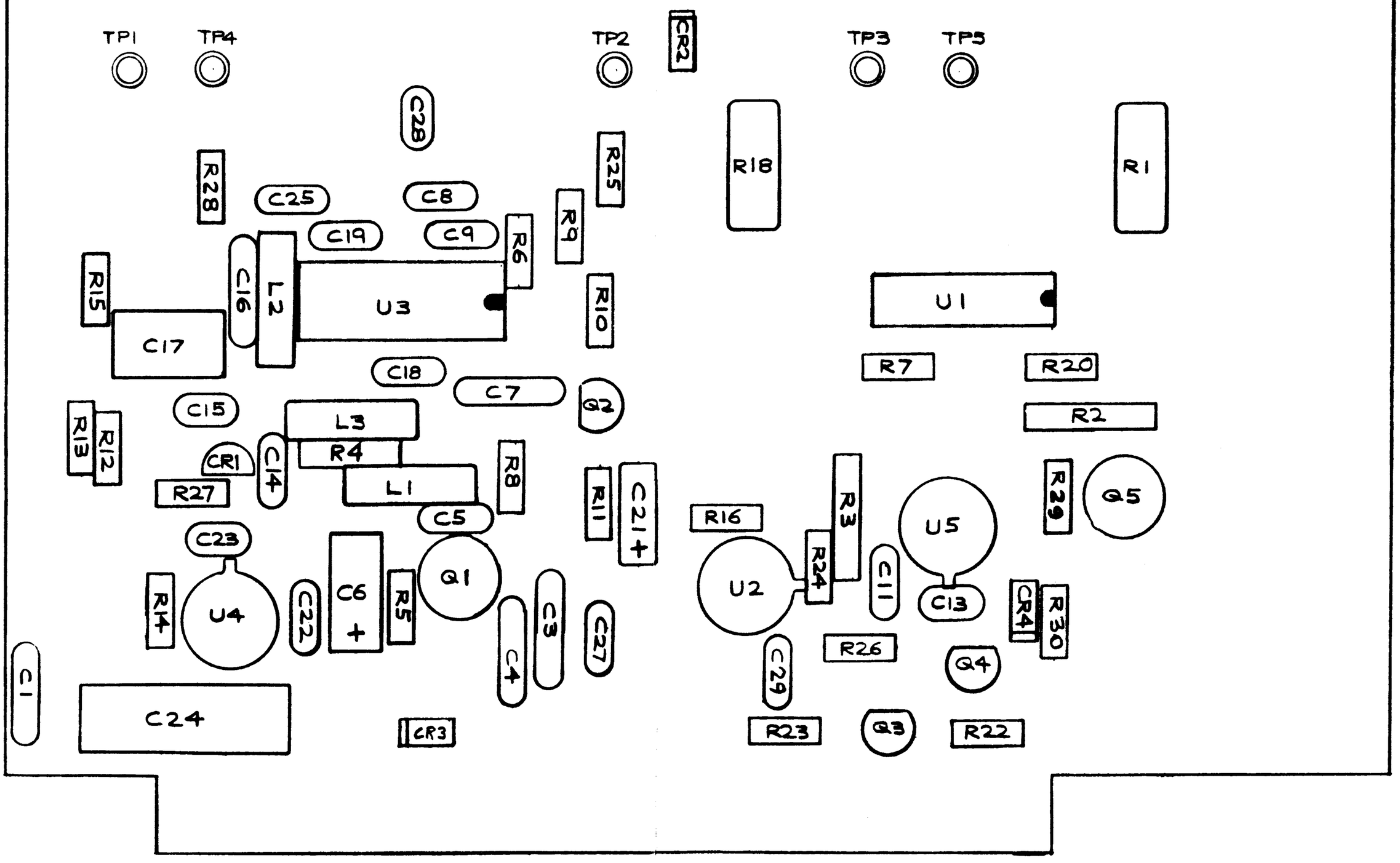

FIGURE 7-20
A4A1, AC DISCRIMINATOR PCB
ASSEMBLY 05563901

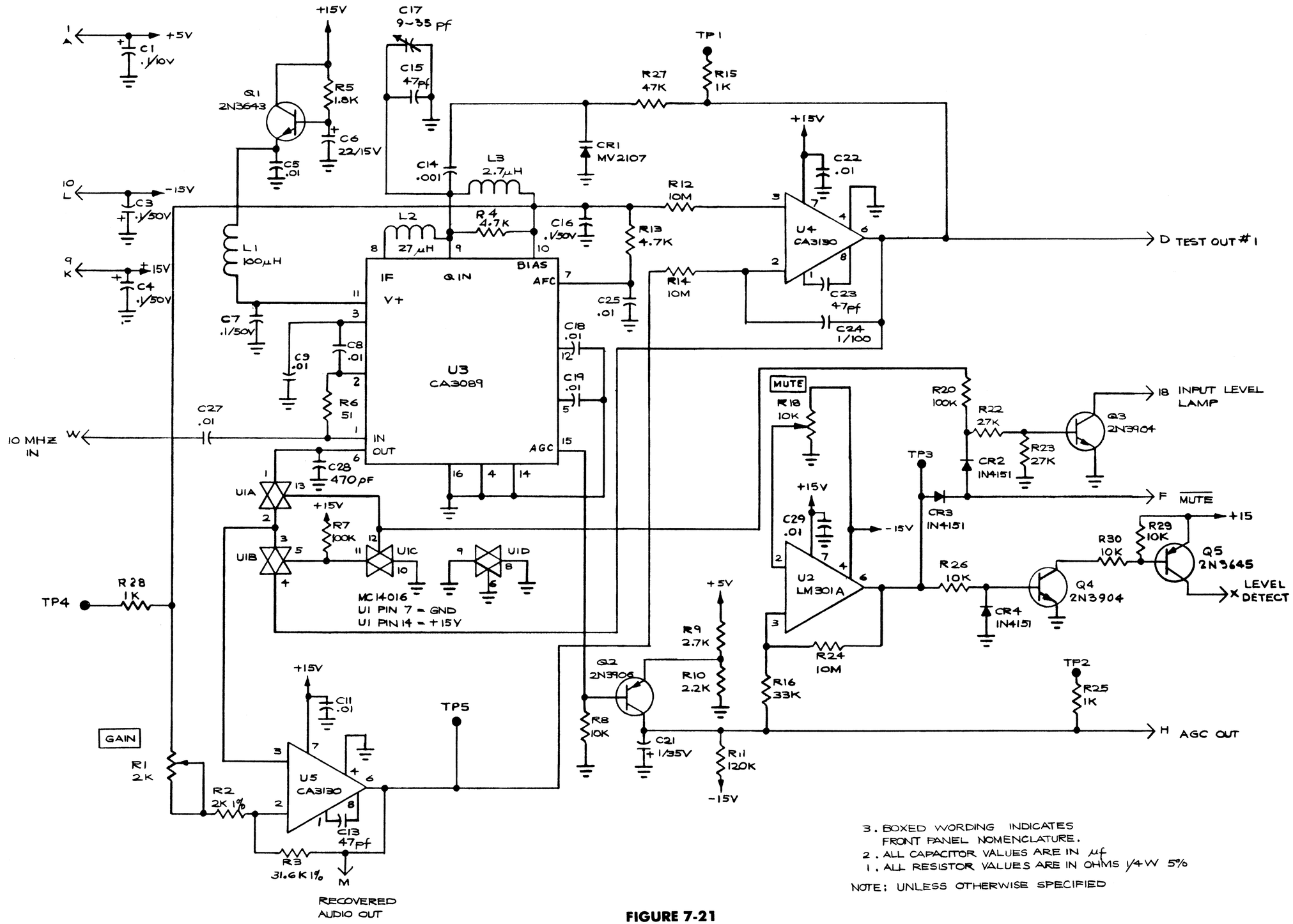

3. BOXED WORDING INDICATES FRONT PANEL NOMENCLATURE.
2. ALL CAPACITOR VALUES ARE IN μf
1. ALL RESISTOR VALUES ARE IN OHMS 1/4W 5%

NOTE: UNLESS OTHERWISE SPECIFIED

FIGURE 7-21
A4A1, AC DISCRIMINATOR
SCHEMATIC 7-05563901

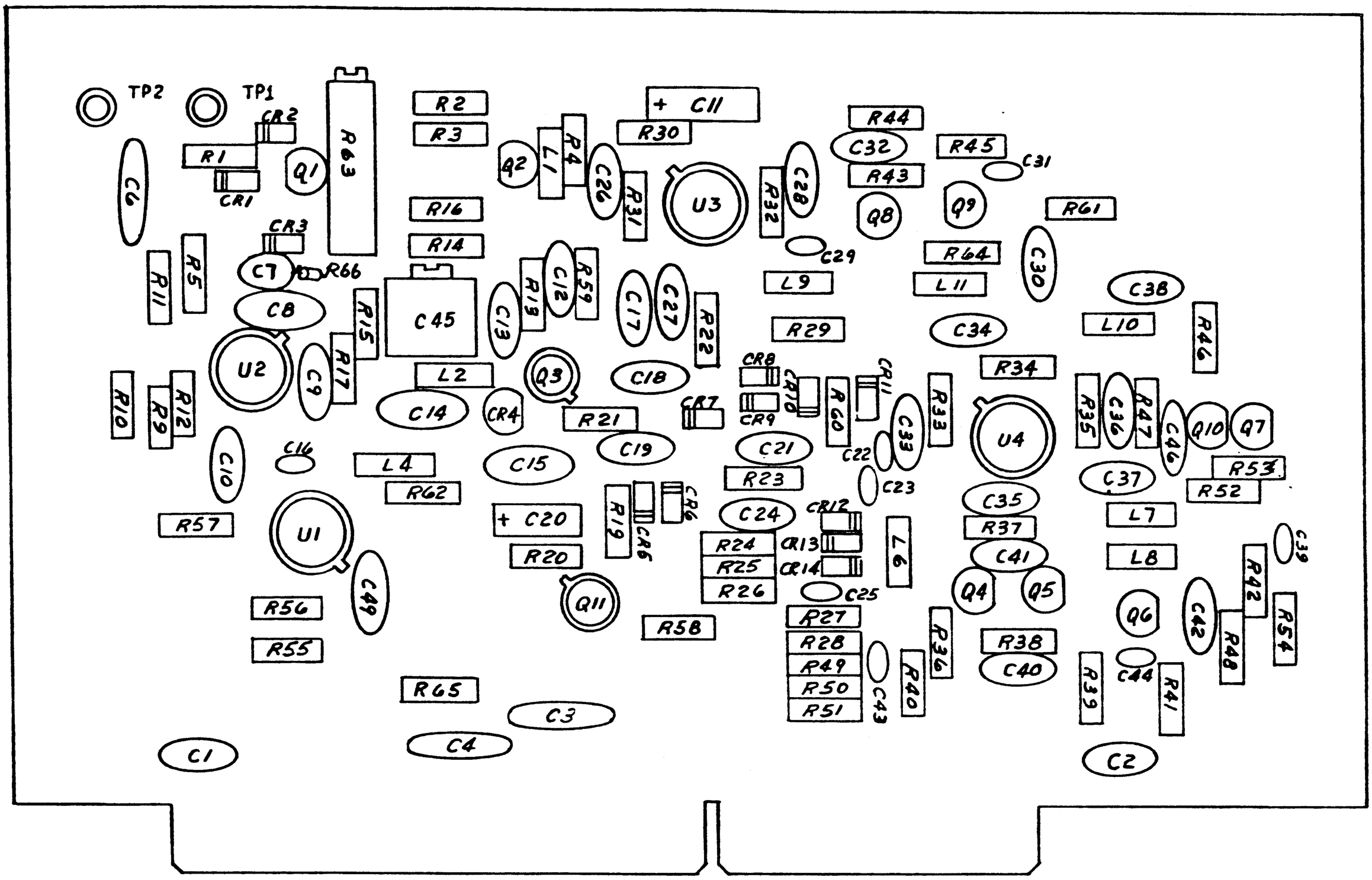

FIGURE 22
A4A2, 10 MHz VCO PCB
ASSEMBLY 05566201

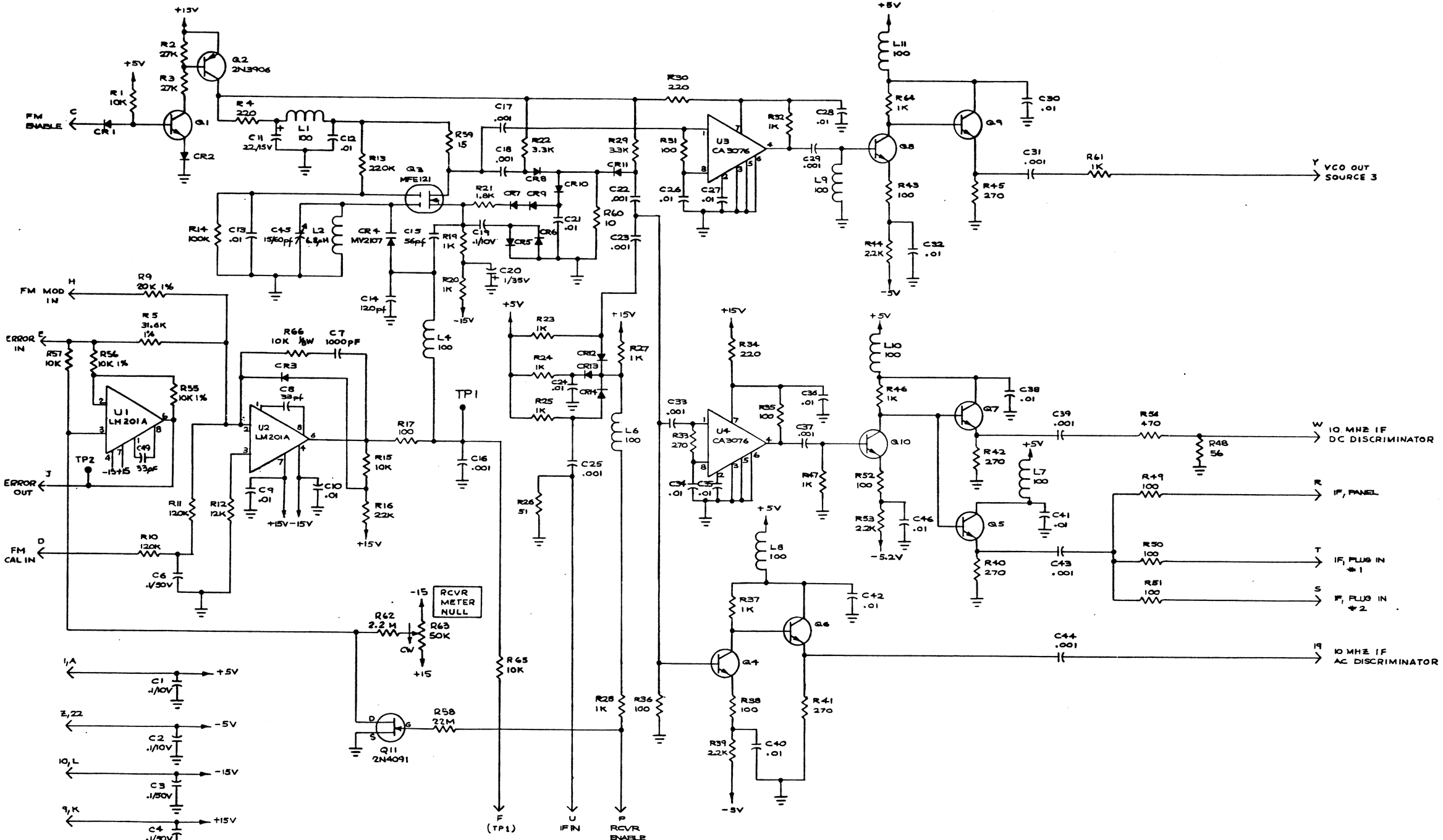

5. ALL INDUCTORS ARE IN μH
4. ALL DIODES ARE IN4151
3. TRANSISTORS ARE 2N3904
2. ALL CAPACITOR VALUES ARE IN μF
1. ALL RESISTOR VALUES ARE IN OHMS 1/4W 5%

NOTES: UNLESS OTHERWISE SPECIFIED

FIGURE 7-23
A4A2, 10 MHz VCO PCB
SCHEMATIC 7-05566201

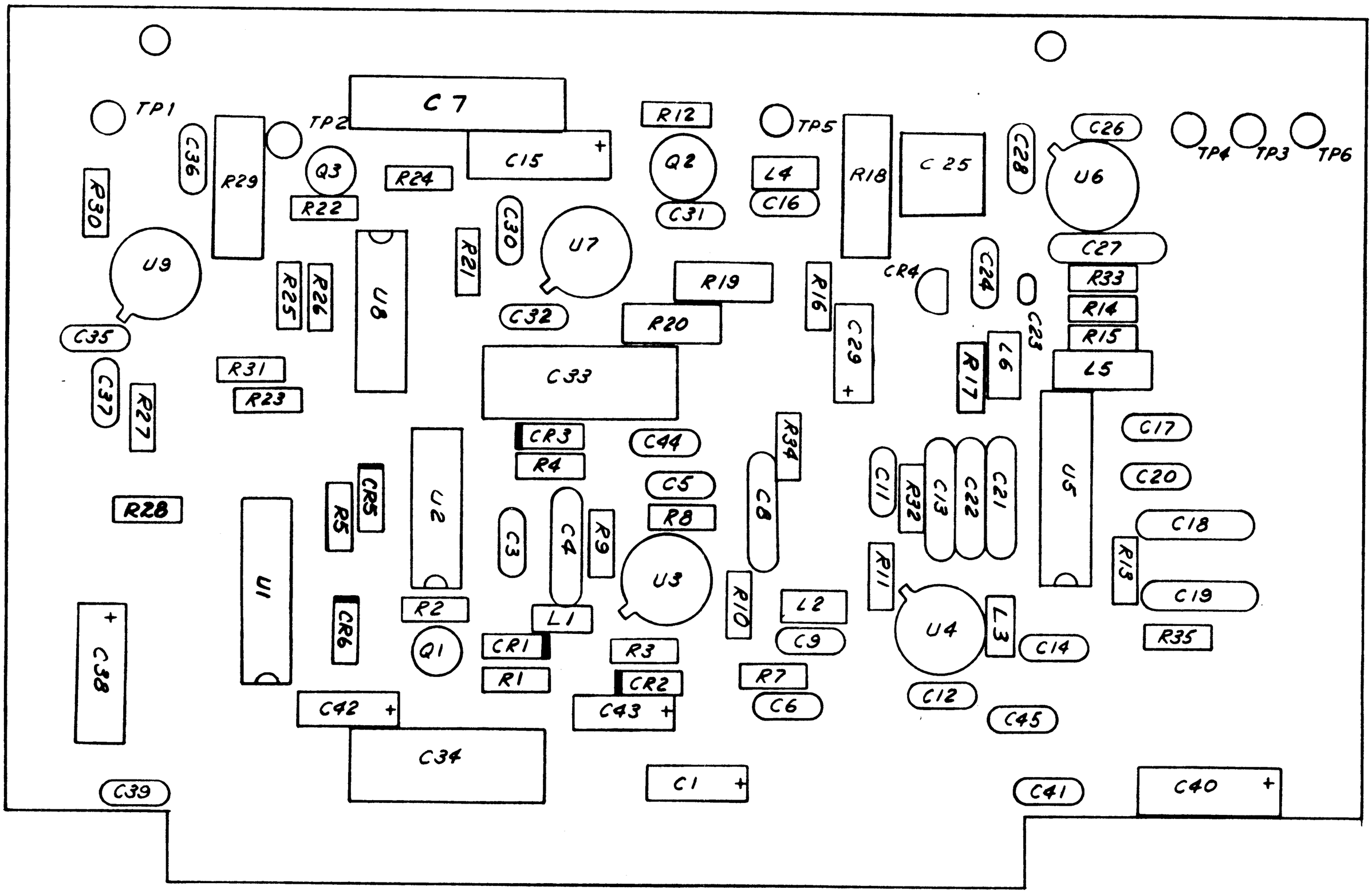

FIGURE 7-24
A4A3, DC DISCRIMINATOR PCB
ASSEMBLY 05537401

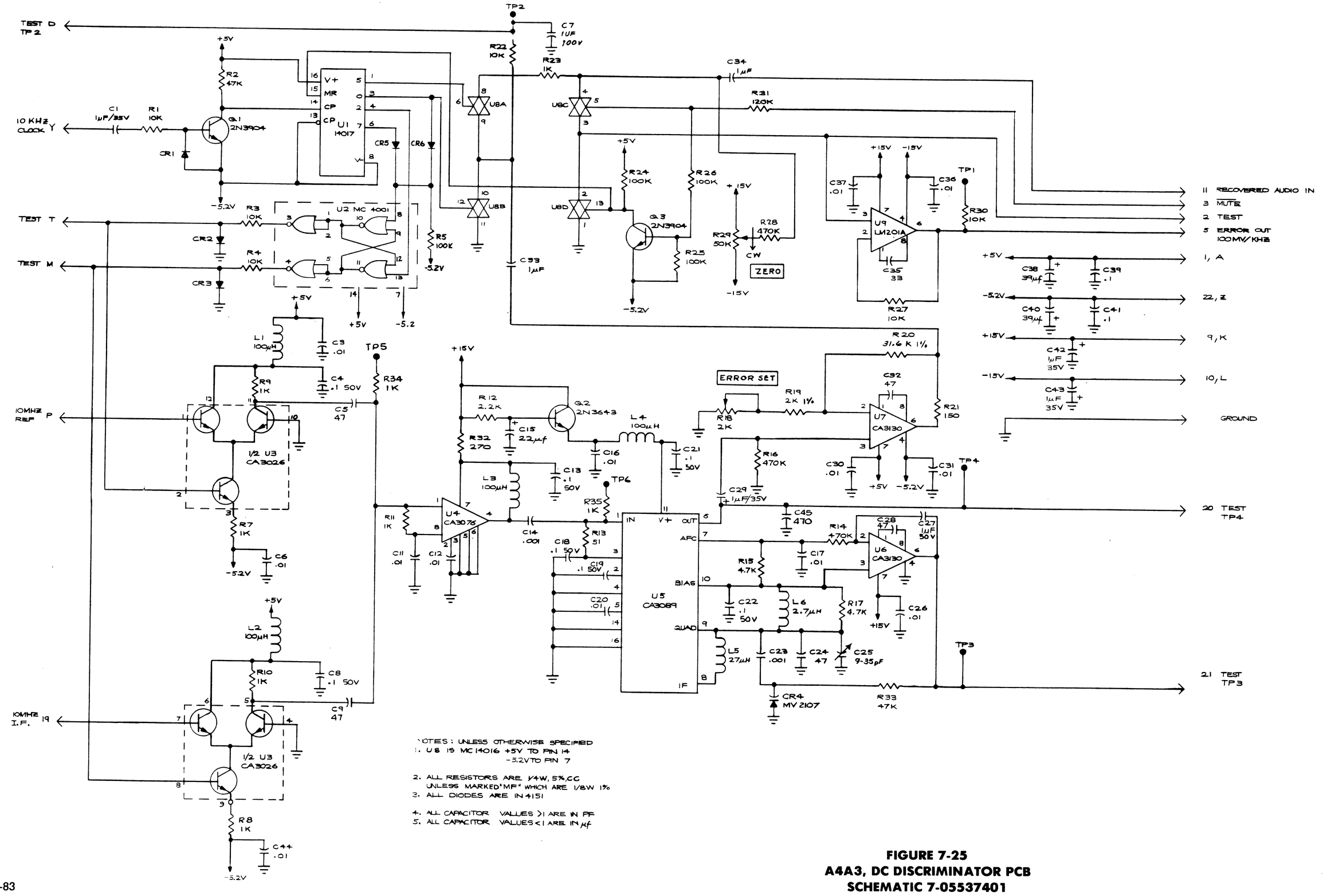

NOTES: UNLESS OTHERWISE SPECIFIED

1. U8 IS MC14016 +5V TO PIN 14
   -5.2V TO PIN 7
2. ALL RESISTORS ARE 1/4W, 5%, CC UNLESS MARKED "MF" WHICH ARE 1/8W 1%
3. ALL DIODES ARE IN4151
4. ALL CAPACITOR VALUES >1 ARE IN PF
5. ALL CAPACITOR VALUES <1 ARE IN μf

FIGURE 7-25
A4A3, DC DISCRIMINATOR PCB
SCHEMATIC 7-05537401

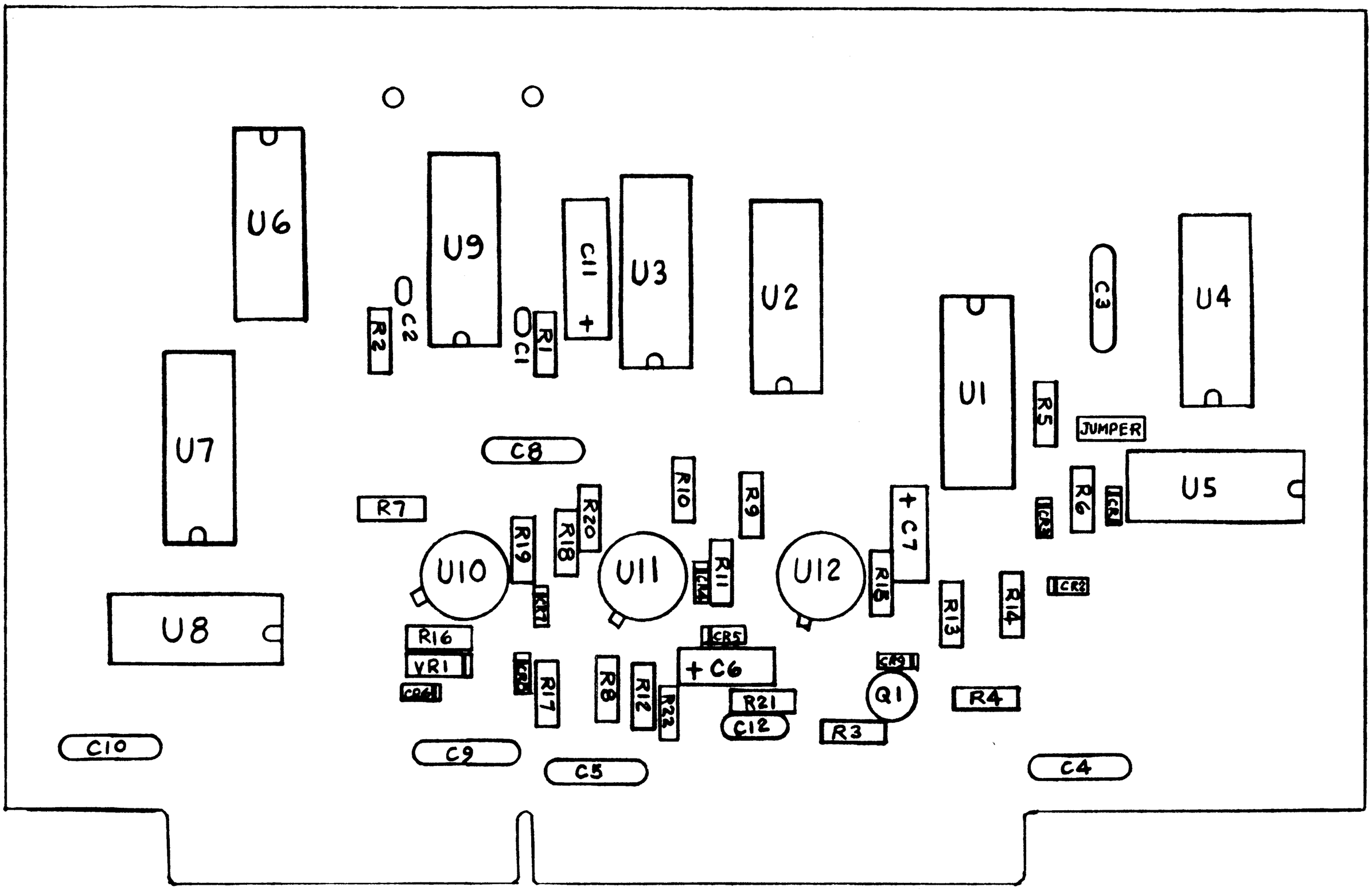

FIGURE 7-26
A4A4, TIME BASE DIVIDER PCB
ASSEMBLY 05395401

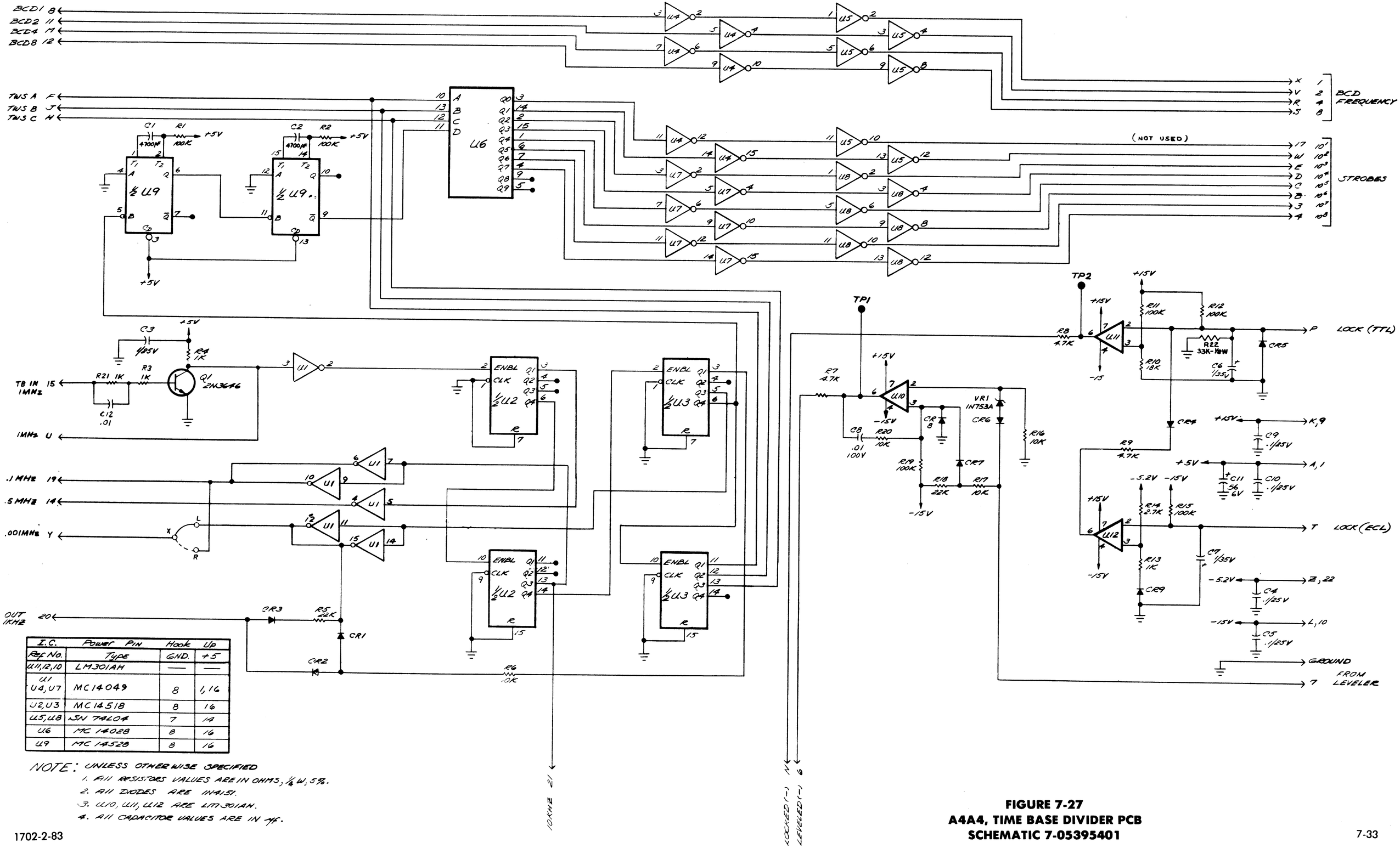

I.C. Ref No.	Power Pin Type	Hook Up GND.	Up +5
U11,12,10	LM301AH	—	—
U1 U4,U7	MC14049	8	1,16
U2,U3	MC14518	8	16
U5,U8	SN 74L04	7	14
U6	MC 14028	8	16
U9	MC 14528	8	16

NOTE: UNLESS OTHERWISE SPECIFIED
1. ALL RESISTORS VALUES ARE IN OHMS, ¼ W, 5%.
2. ALL DIODES ARE IN4151.
3. U10, U11, U12 ARE LM301AH.
4. ALL CAPACITOR VALUES ARE IN μf.

FIGURE 7-27
A4A4, TIME BASE DIVIDER PCB
SCHEMATIC 7-05395401

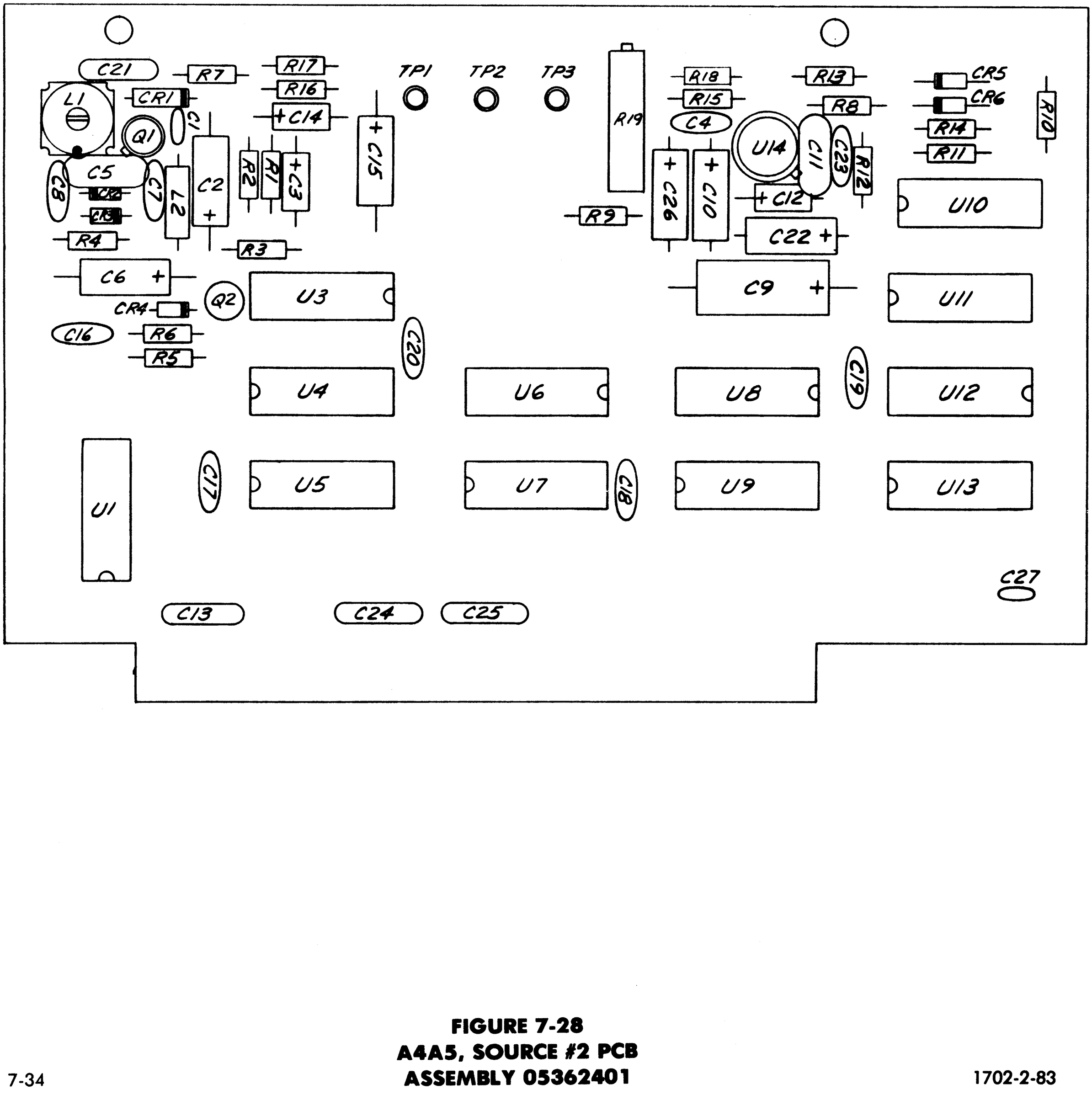

FIGURE 7-28
A4A5, SOURCE #2 PCB
ASSEMBLY 05362401

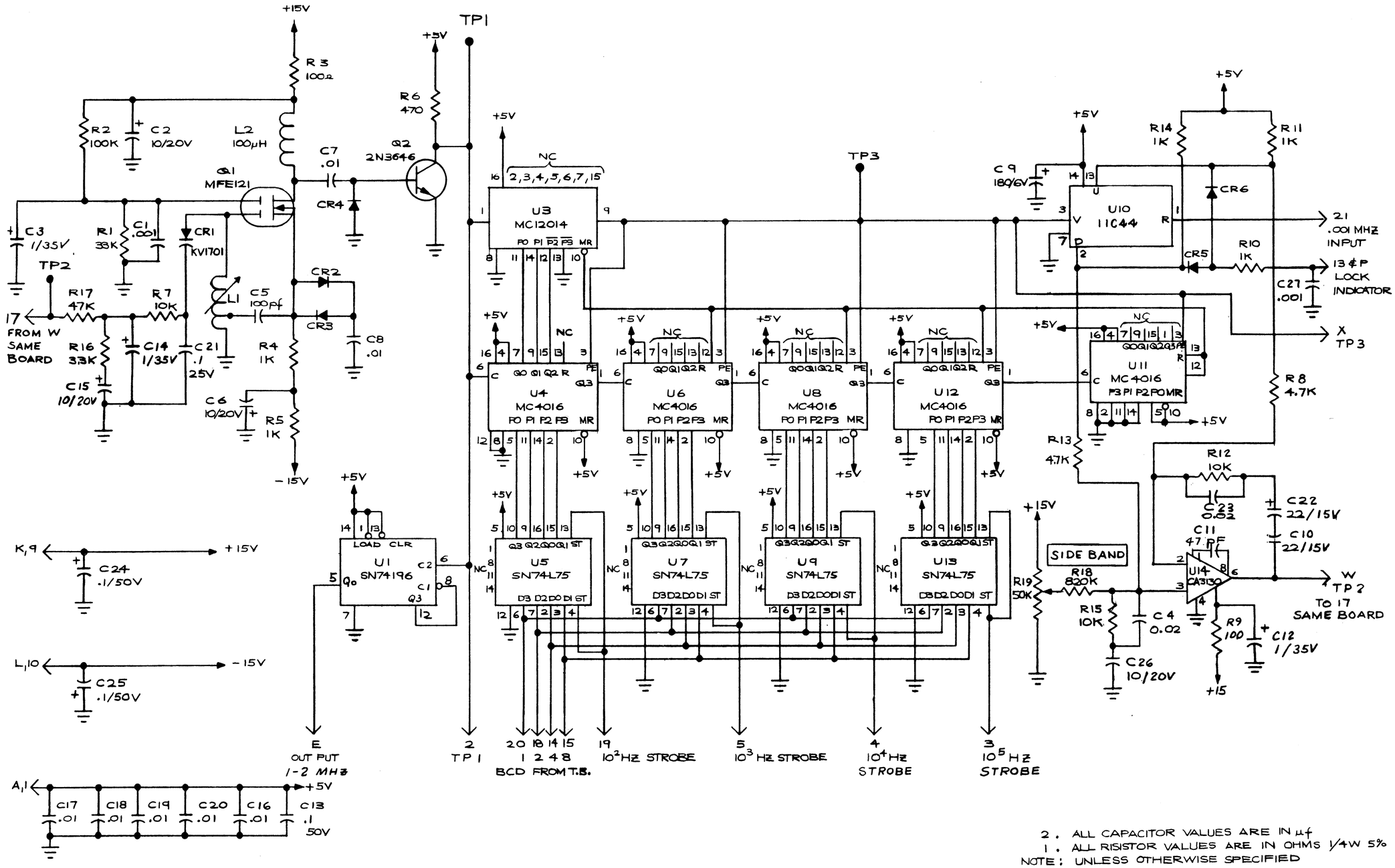

2. ALL CAPACITOR VALUES ARE IN μf
1. ALL RISISTOR VALUES ARE IN OHMS 1/4W 5%
NOTE: UNLESS OTHERWISE SPECIFIED

FIGURE 7-29
A4A5, SOURCE #2 PCB
SCHEMATIC 7-05362401

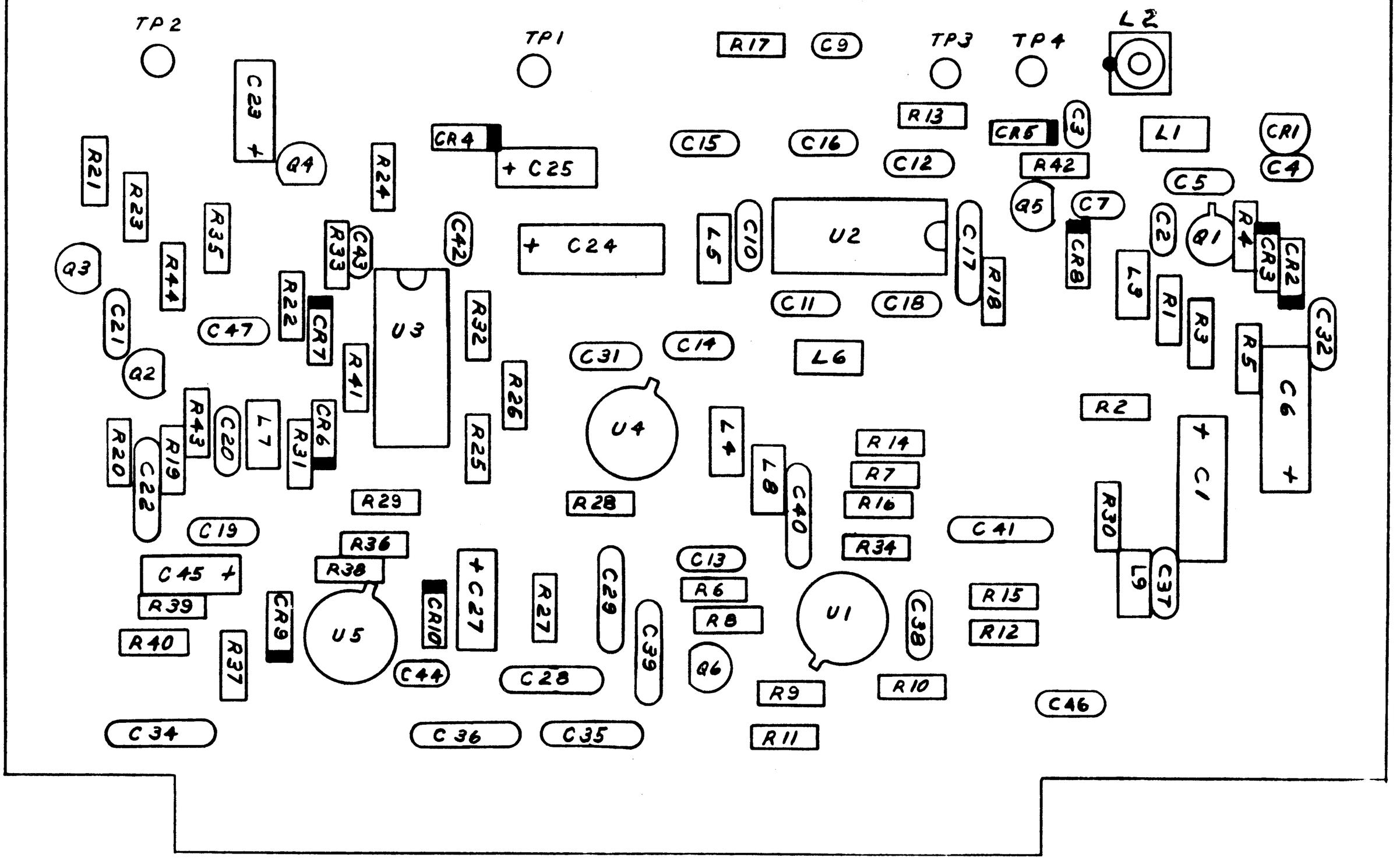

FIGURE 7-30
A4A6, SOURCE #3 PCB
ASSEMBLY 05373501

4. CXX VALUES TO BE SELECTED AT TEST IF REQD.
3. ALL DIODES ARE IN4151
2. ALL CAPACITOR VALUES ARE IN µF
1. ALL RESISTOR VALUES ARE IN OHMS 1/4W 5%
NOTE : UNLESS OTHERWISE SPECIFIED.

FIGURE 7-31
A4A6, SOURCE #3 PCB
SCHEMATIC 7-05373501

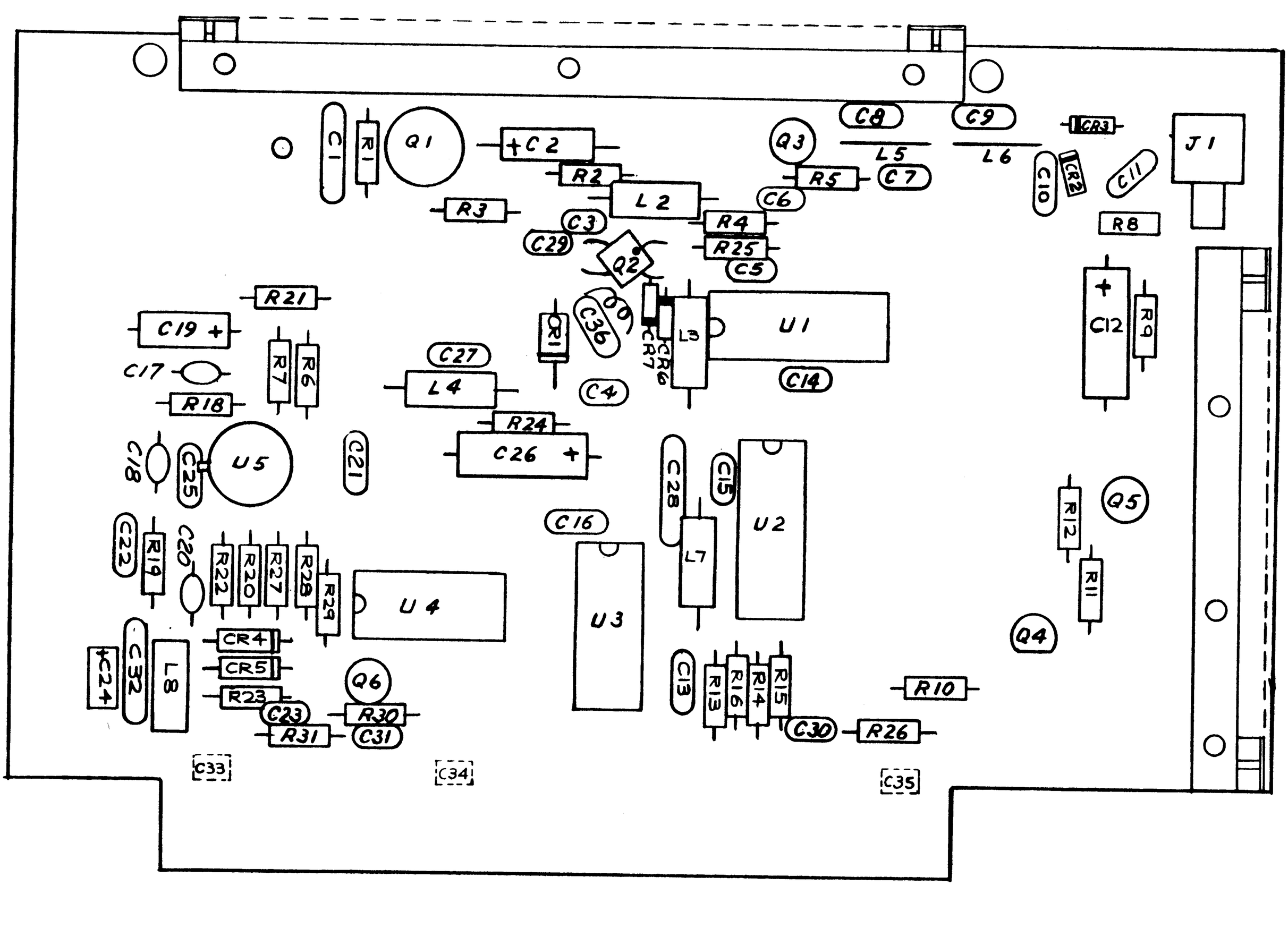

FIGURE 7-32
A4A8, 400 MHz REFERENCE GENERATOR PCB ASSEMBLY 05566801

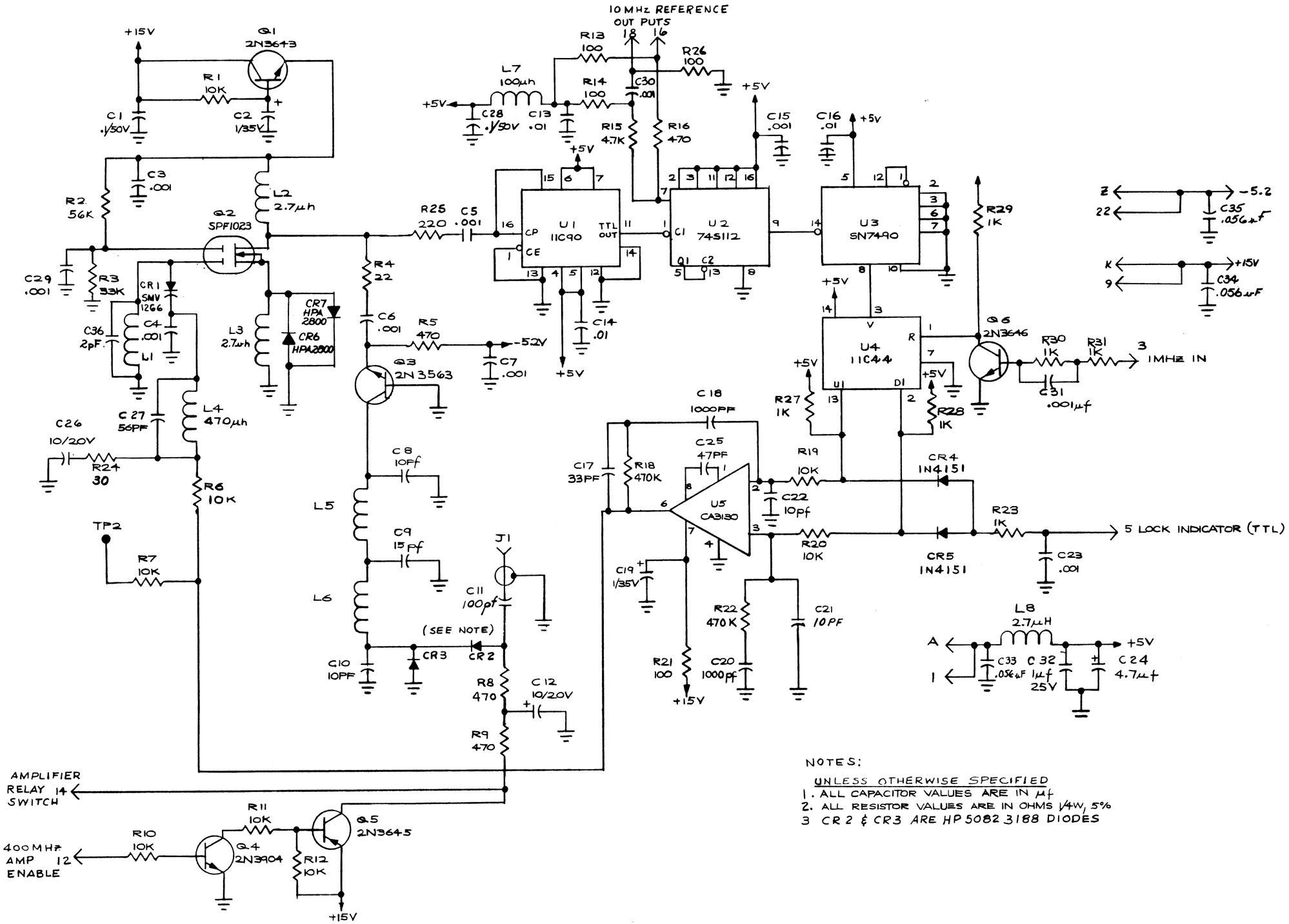

NOTES:

UNLESS OTHERWISE SPECIFIED

1. ALL CAPACITOR VALUES ARE IN µf
2. ALL RESISTOR VALUES ARE IN OHMS 1/4W, 5%
3. CR2 & CR3 ARE HP5082 3188 DIODES

FIGURE 7-33
A4A8, 400 MHz REFERENCE GENERATOR PCB SCHEMATIC 7-05566801

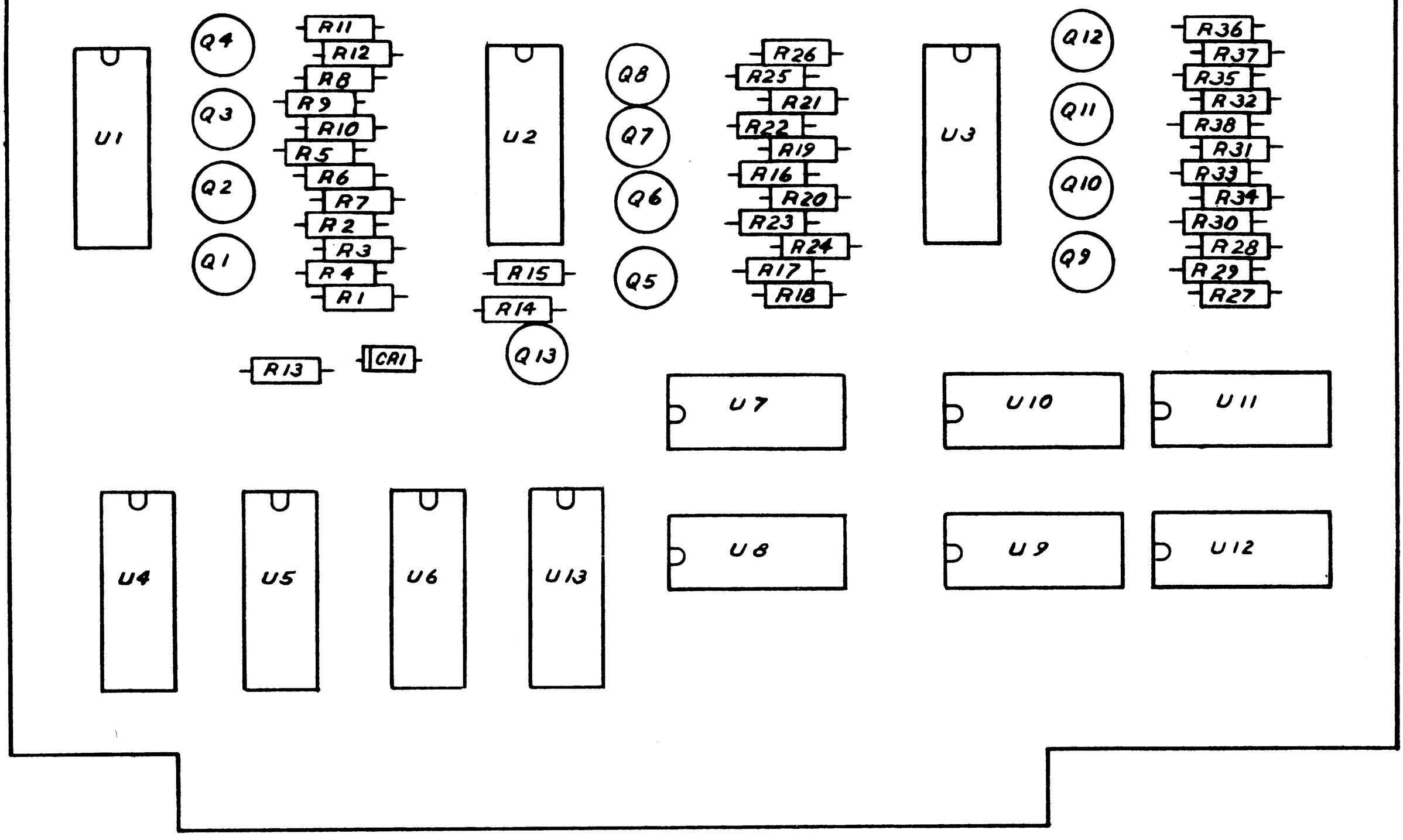

FIGURE 7-34
A4A9, LOGIC PCB
ASSEMBLY 0557101

REF. DES.	TYPE	PIN NO +5 V	PIN NO. GND
U4, 5, 6	74L75N	5	12
U7	MC3002	14	7
U8, 9	SN7408N	14	7
U10	SN7432N	14	7
U11	SN7400N	14	7
U12	MC3021	14	7

3. ALL DIODES ARE IN4151
2. ALL TRANSISTORS ARE 2N4249
1. ALL RESISTOR VALUES ARE IN OHMS 1/4W 5%

NOTE : UNLESS OTHERWISE SPECIFIED

FIGURE 7-35
A4A9, LOGIC PCB
SCHEMATIC 7-0557101

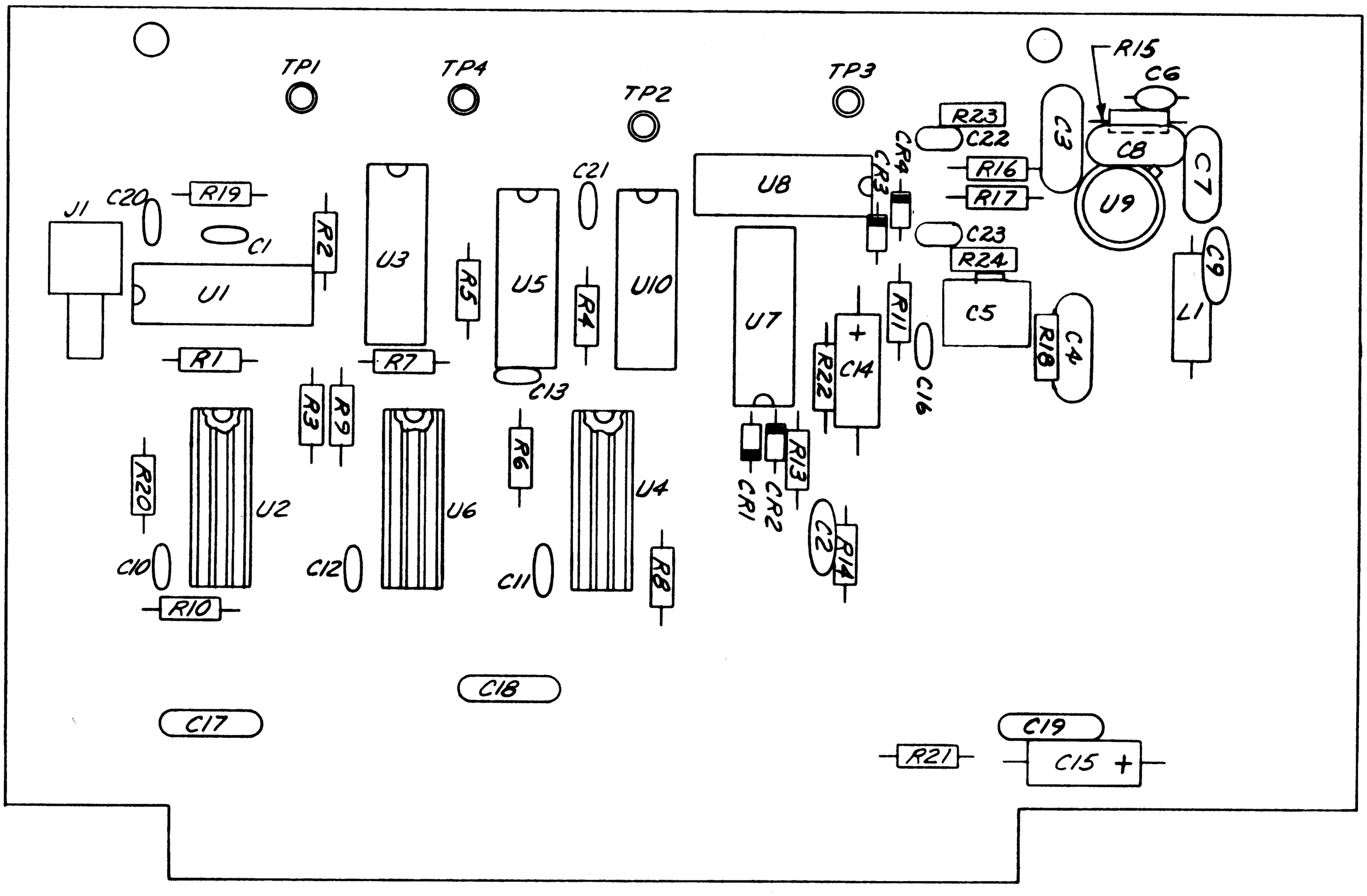

FIGURE 7-36
A4A10, DIVIDE-BY-N PCB
ASSEMBLY 05567001

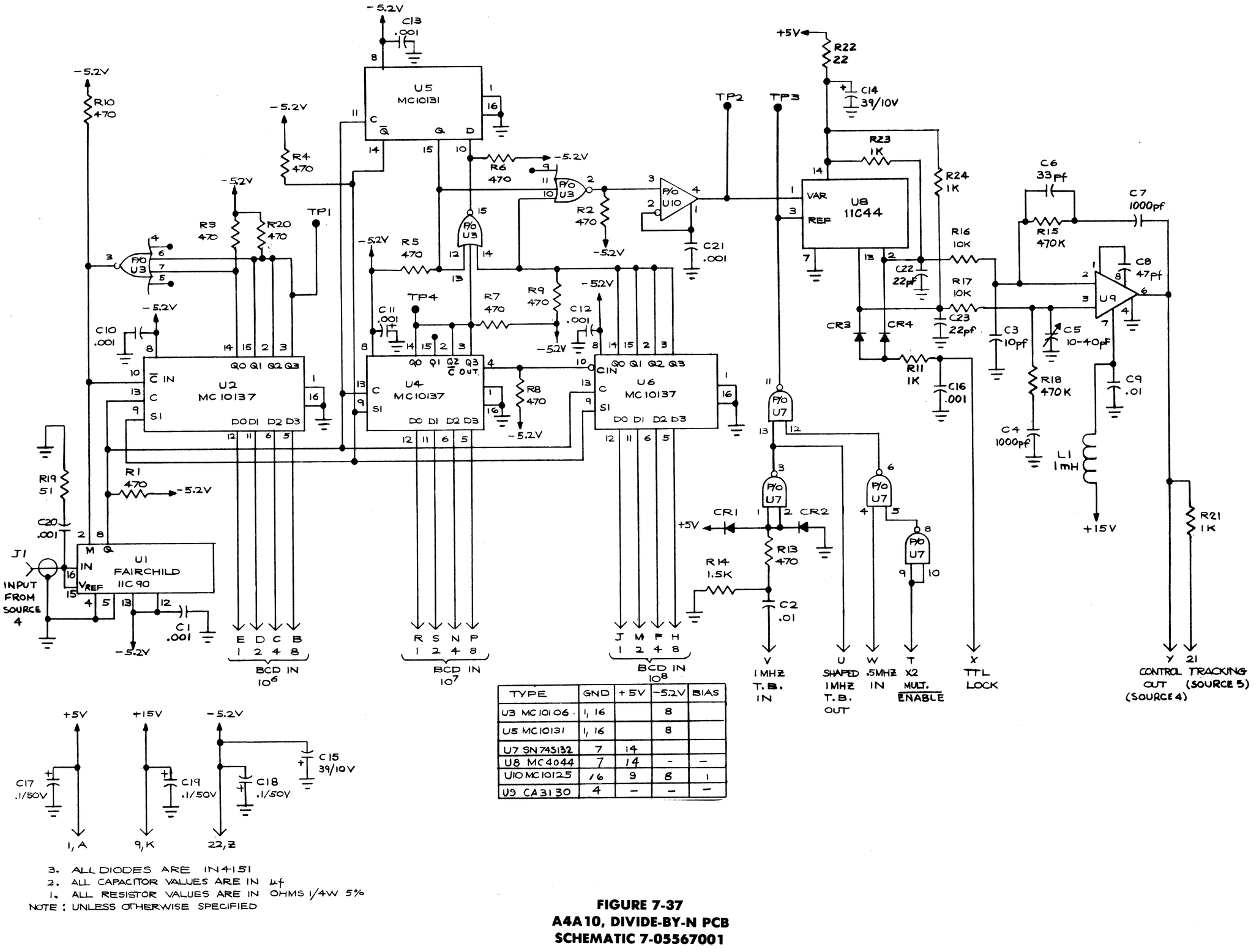

TYPE	GND	+5V	-5.2V	BIAS
U3 MC10106	1, 16		8	
U5 MC10131	1, 16		8	
U7 SN745132	7	14		
U8 MC4044	7	14	-	-
U10 MC10125	16	9	8	1
U9 CA3130	4	-	-	-

3. ALL DIODES ARE IN4151
2. ALL CAPACITOR VALUES ARE IN μf
1. ALL RESISTOR VALUES ARE IN OHMS 1/4W 5%

NOTE : UNLESS OTHERWISE SPECIFIED

FIGURE 7-37
A4A10, DIVIDE-BY-N PCB
SCHEMATIC 7-05567001

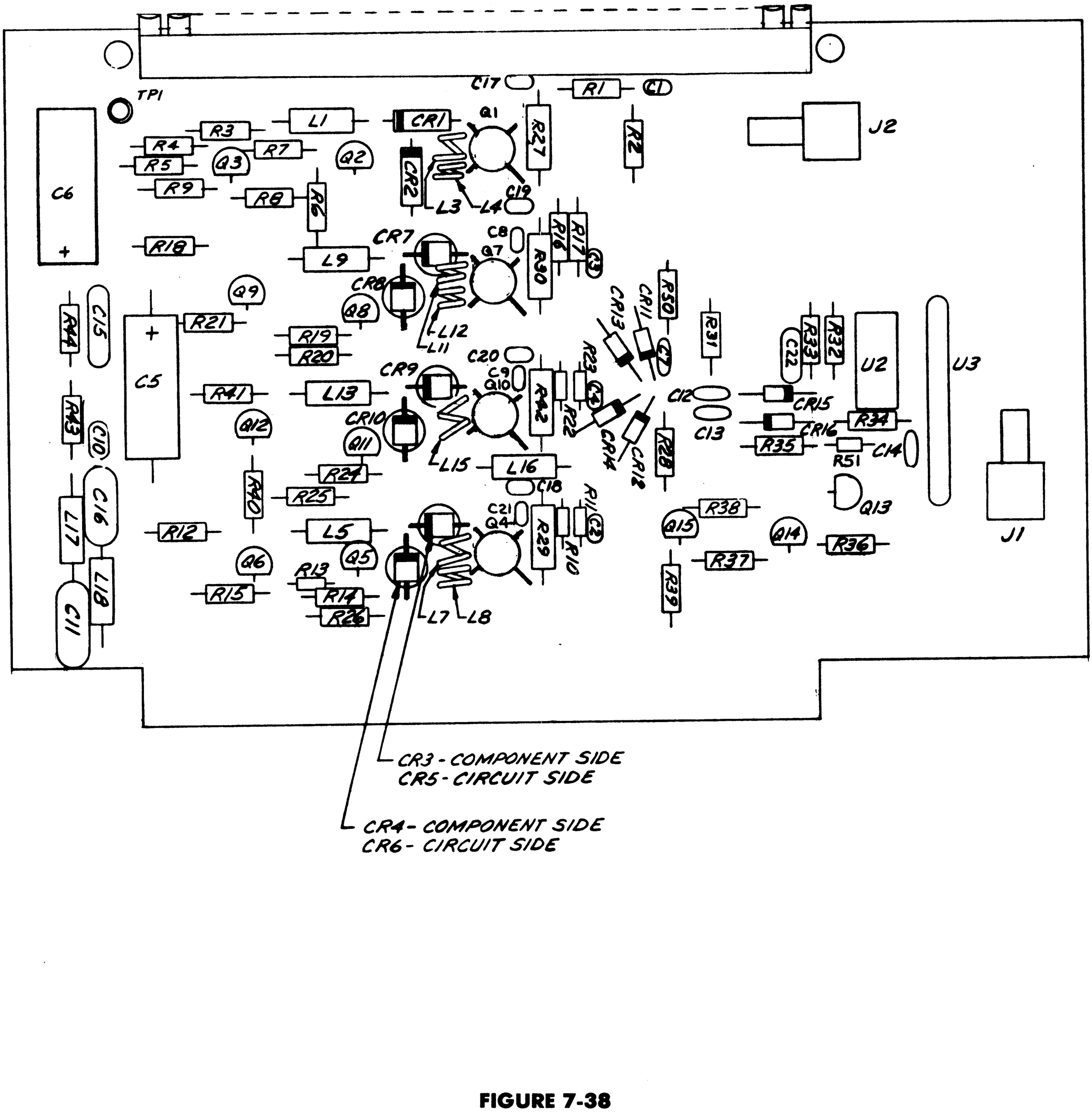

FIGURE 7-38
A4A11, SOURCE #4 PCB
ASSEMBLY 05372401

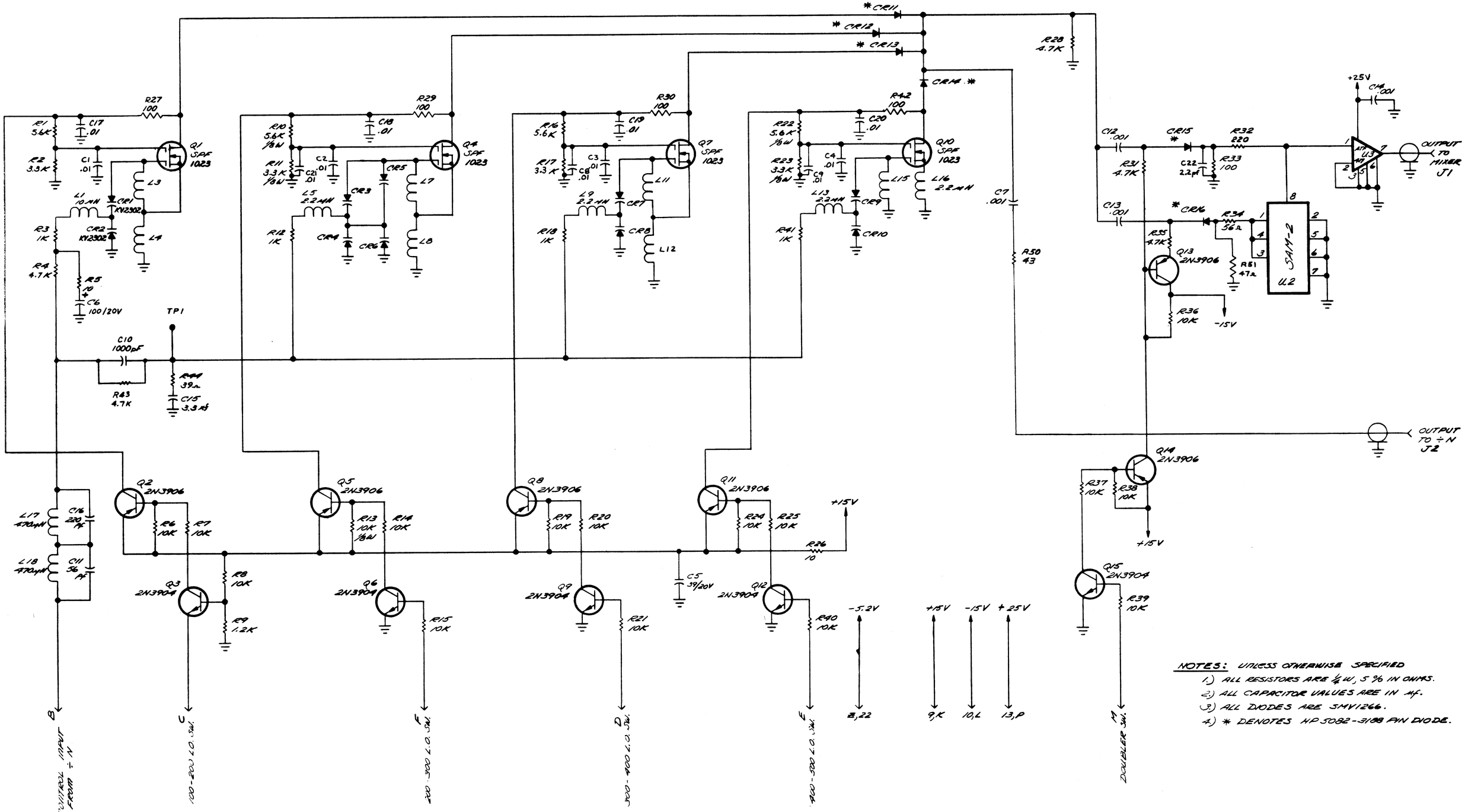

NOTES: UNLESS OTHERWISE SPECIFIED

1.) ALL RESISTORS ARE ¼ W, 5 % IN OHMS.
2.) ALL CAPACITOR VALUES ARE IN Mf.
3.) ALL DIODES ARE SMV1266.
4.) * DENOTES HP 5082-3188 PIN DIODE.

FIGURE 7-39
A4A11, SOURCE #4 PCB
SCHEMATIC 7-05372401

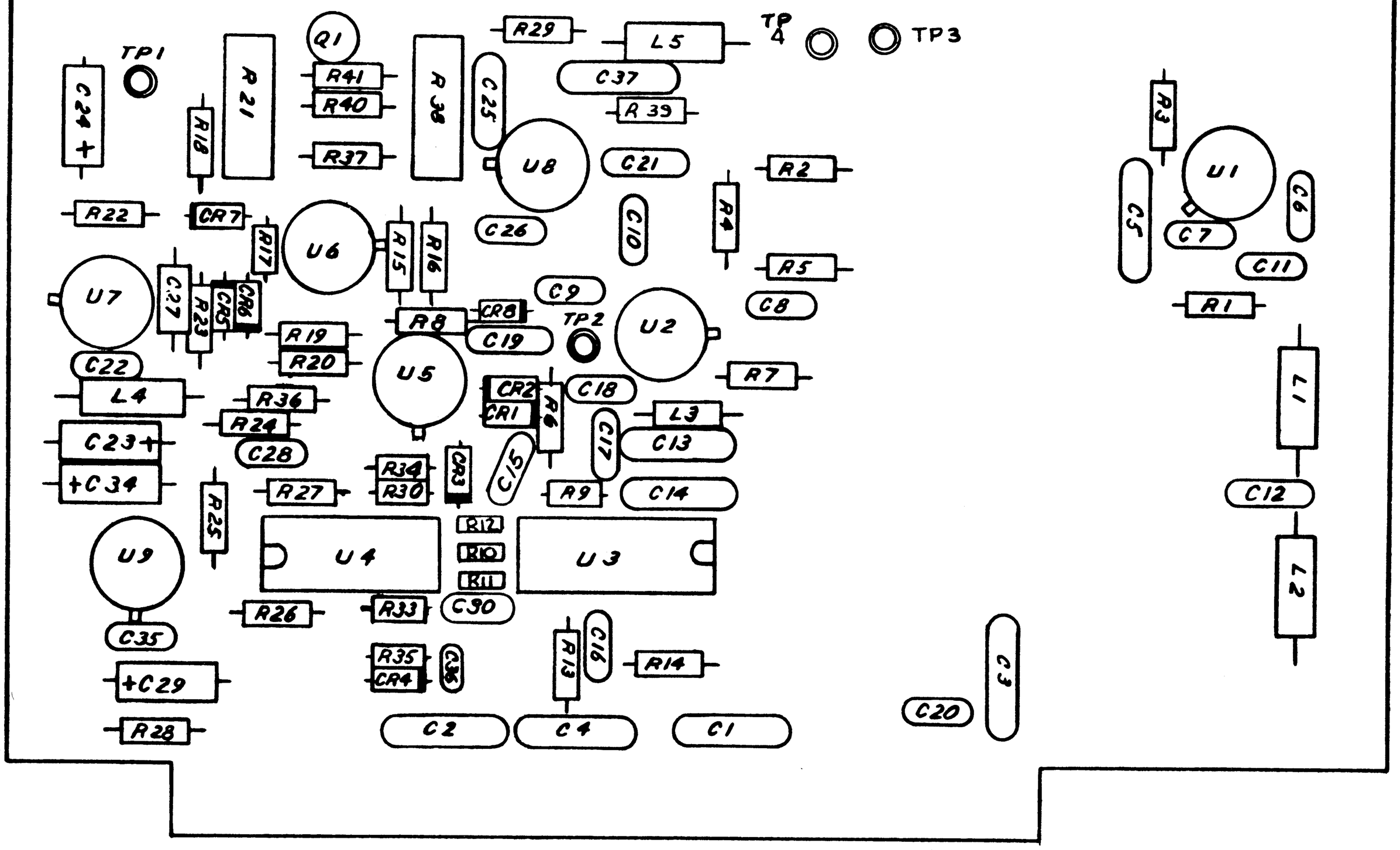

FIGURE 7-40
A4A12, PHASE DETECTOR PCB
ASSEMBLY 5538501

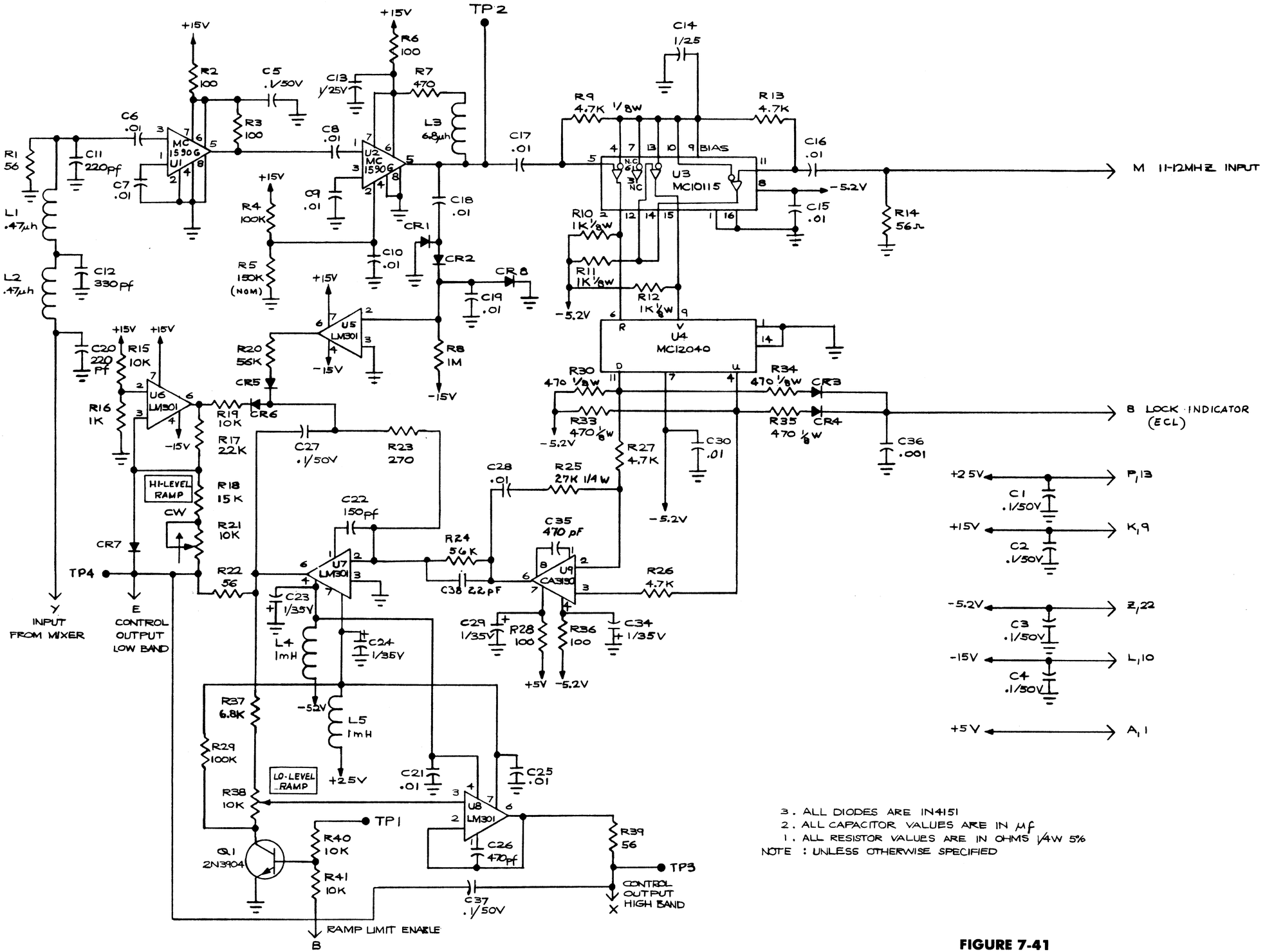

3. ALL DIODES ARE IN4151
2. ALL CAPACITOR VALUES ARE IN µf
1. ALL RESISTOR VALUES ARE IN OHMS 1/4W 5%
NOTE : UNLESS OTHERWISE SPECIFIED

FIGURE 7-41
A4A12, PHASE DETECTOR PCB
SCHEMATIC 7-05538501

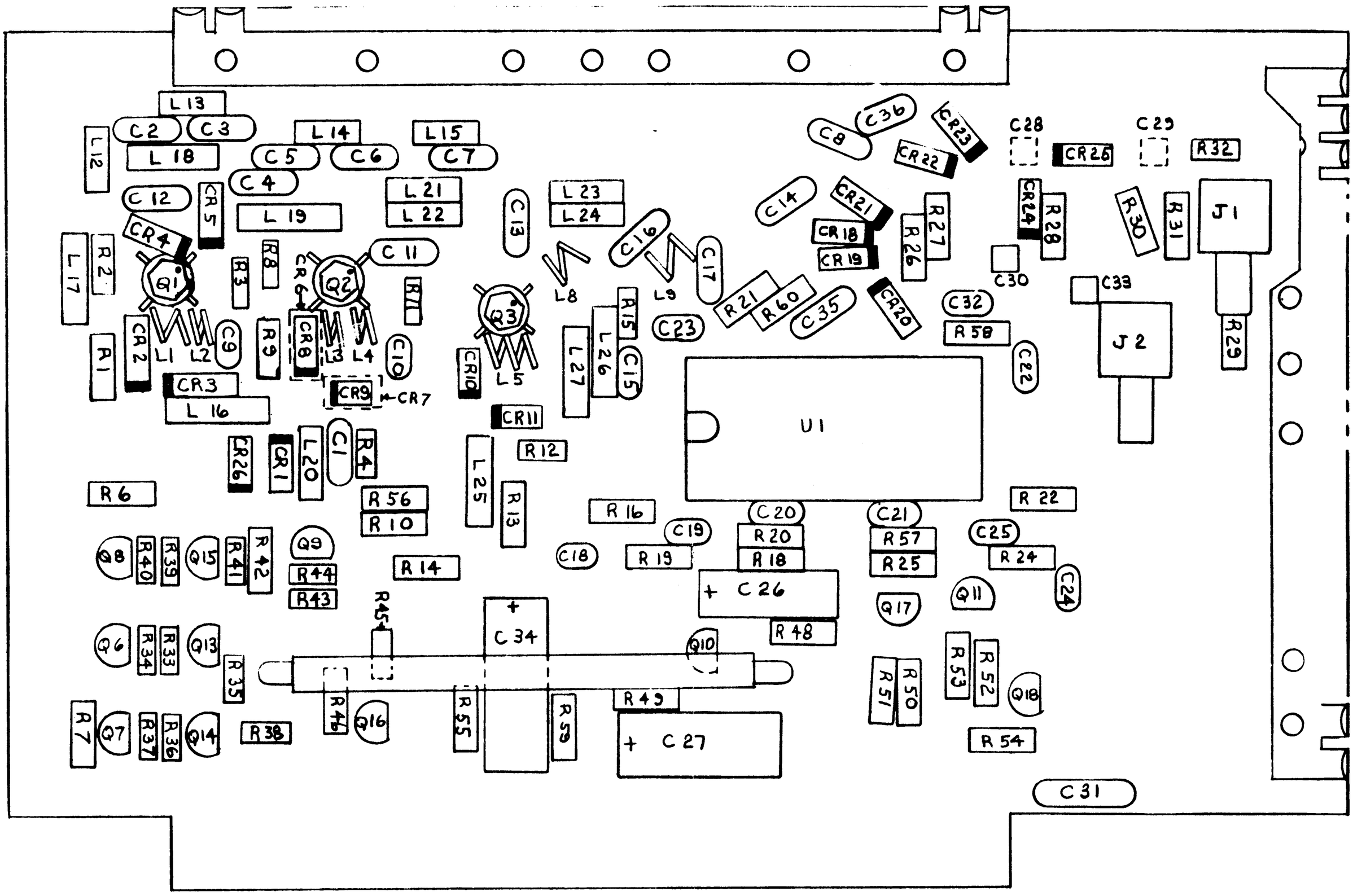

FIGURE 7-42
A4A13, SOURCE #5 PCB
ASSEMBLY 05797001

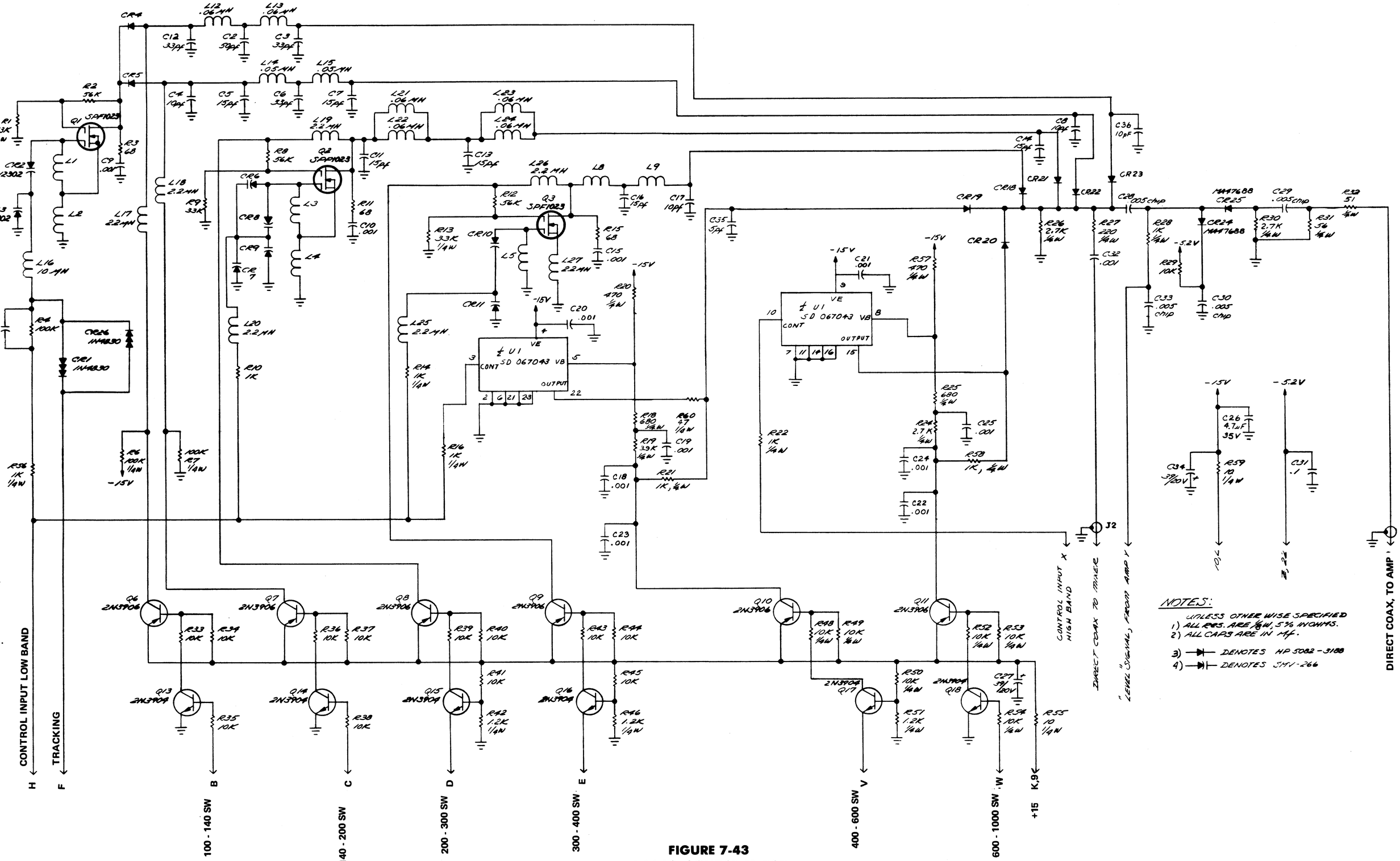

NOTES:
UNLESS OTHERWISE SPECIFIED
1) ALL RES. ARE 1/4W, 5% IN OHMS.
2) ALL CAPS ARE IN Mf.
3) ▶|— DENOTES HP 5082-3188
4) ▶|— DENOTES SMV-266

FIGURE 7-43
A4A13, SOURCE #5 PCB
SCHEMATIC 7-05797001

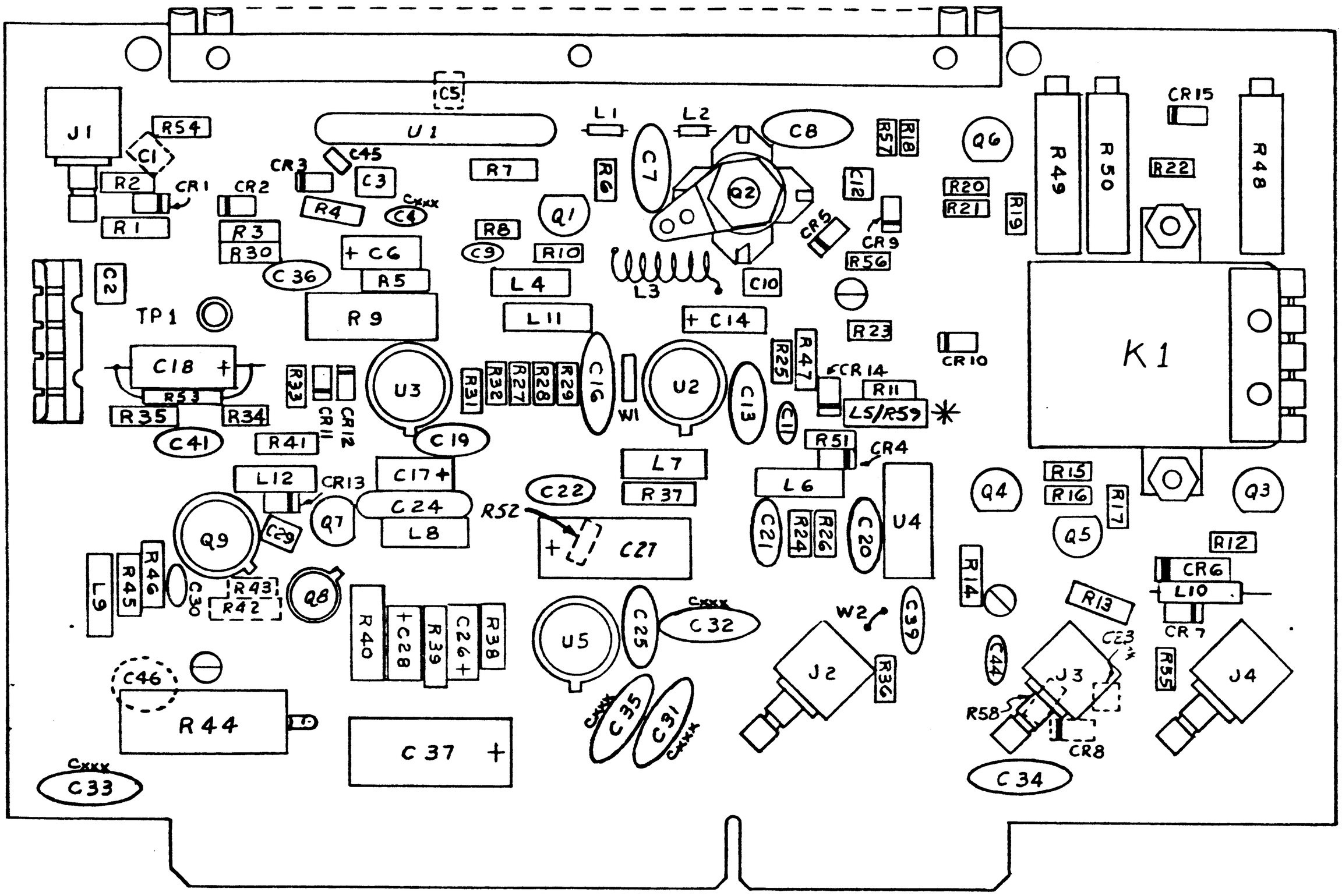

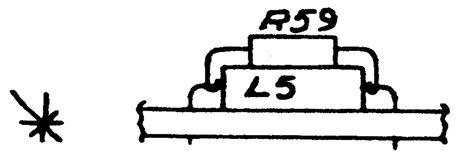

FIGURE 7-44
A4A14, AMPLIFIER PCB
ASSEMBLY 05392901

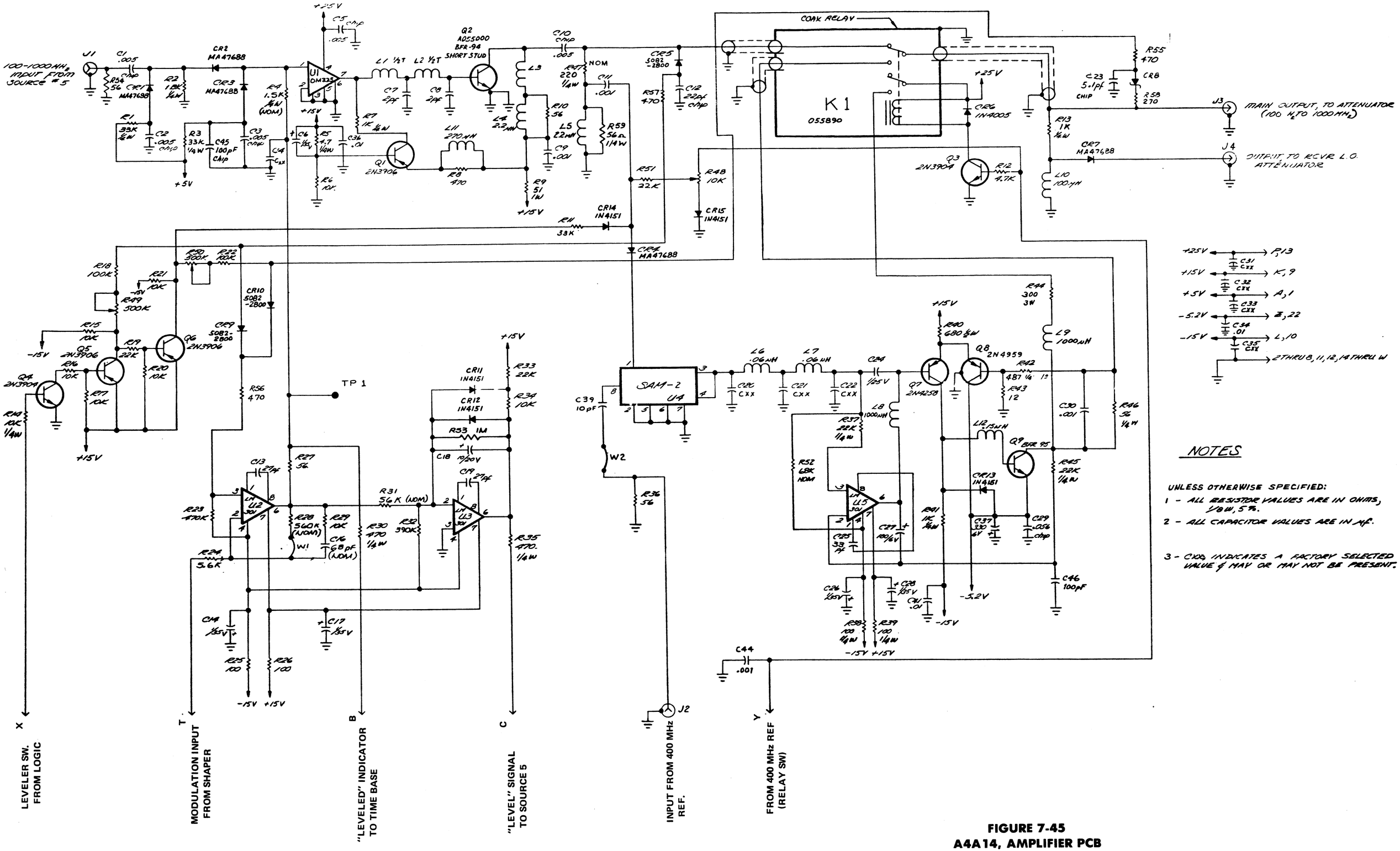

NOTES

UNLESS OTHERWISE SPECIFIED:

1 - ALL RESISTOR VALUES ARE IN OHMS, 1/8W, 5%.

2 - ALL CAPACITOR VALUES ARE IN μF.

3 - CXX INDICATES A FACTORY SELECTED VALUE & MAY OR MAY NOT BE PRESENT.

FIGURE 7-45
A4A14, AMPLIFIER PCB
SCHEMATIC 7-05392901

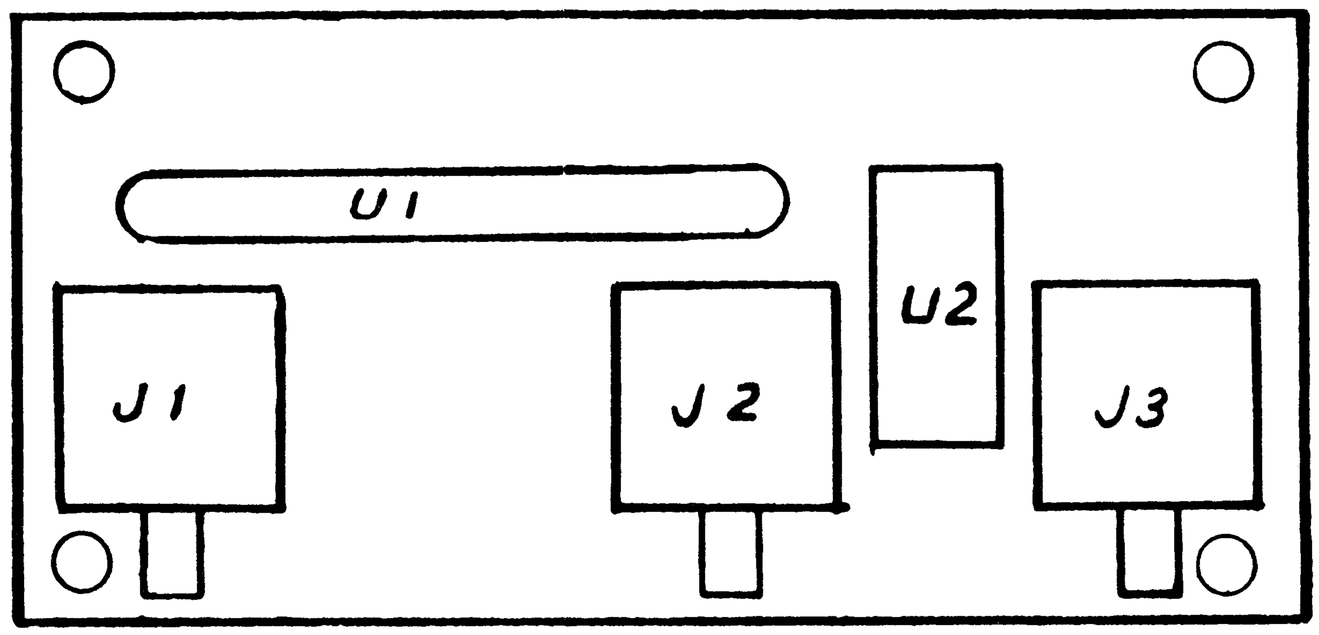

COMPONENT SIDE

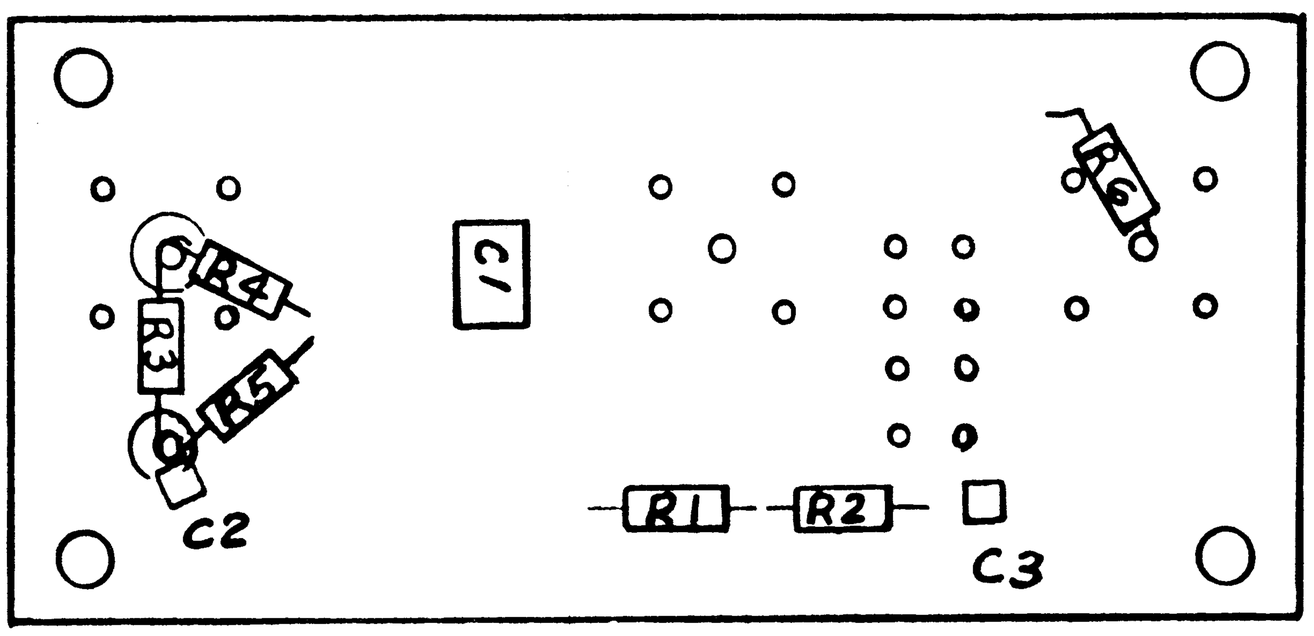

CIRCUIT SIDE

FIGURE 7-46
A4A16, MIXER PCB
ASSEMBLY 05547001

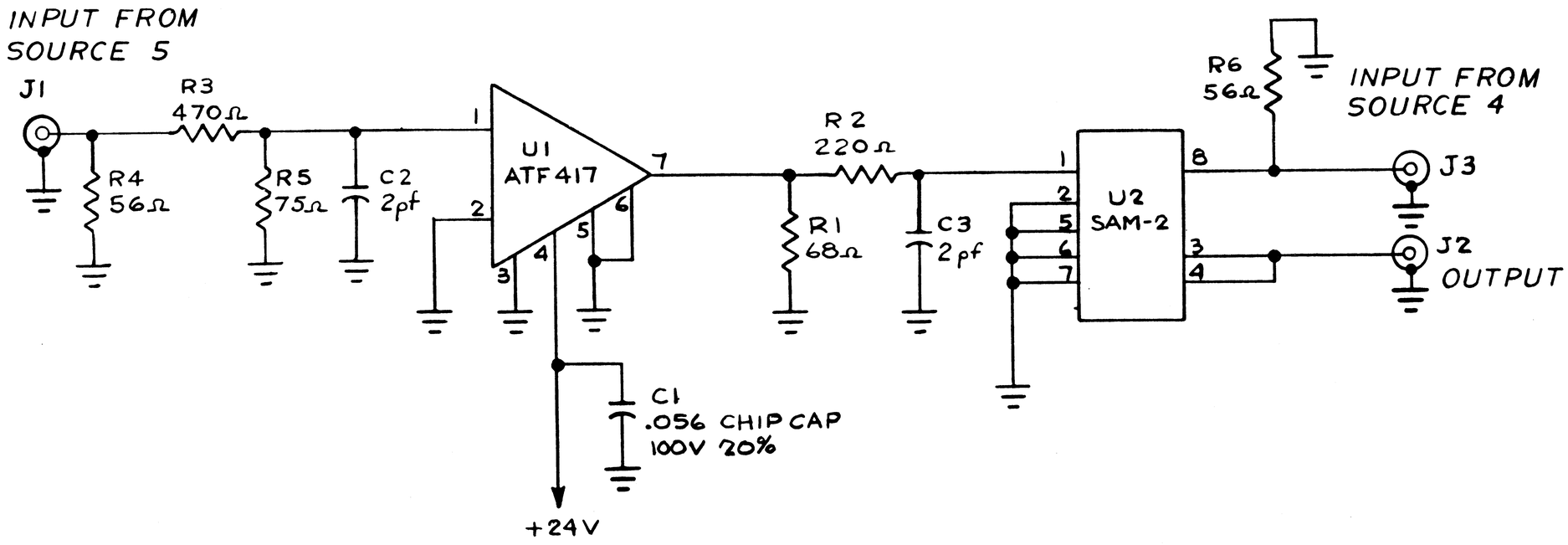

NOTE:
1. UNLESS NOTED: ALL RES. ARE 1/8W, 5%

FIGURE 7-47
A4A16, MIXER PCB
SCHEMATIC 7-05547001

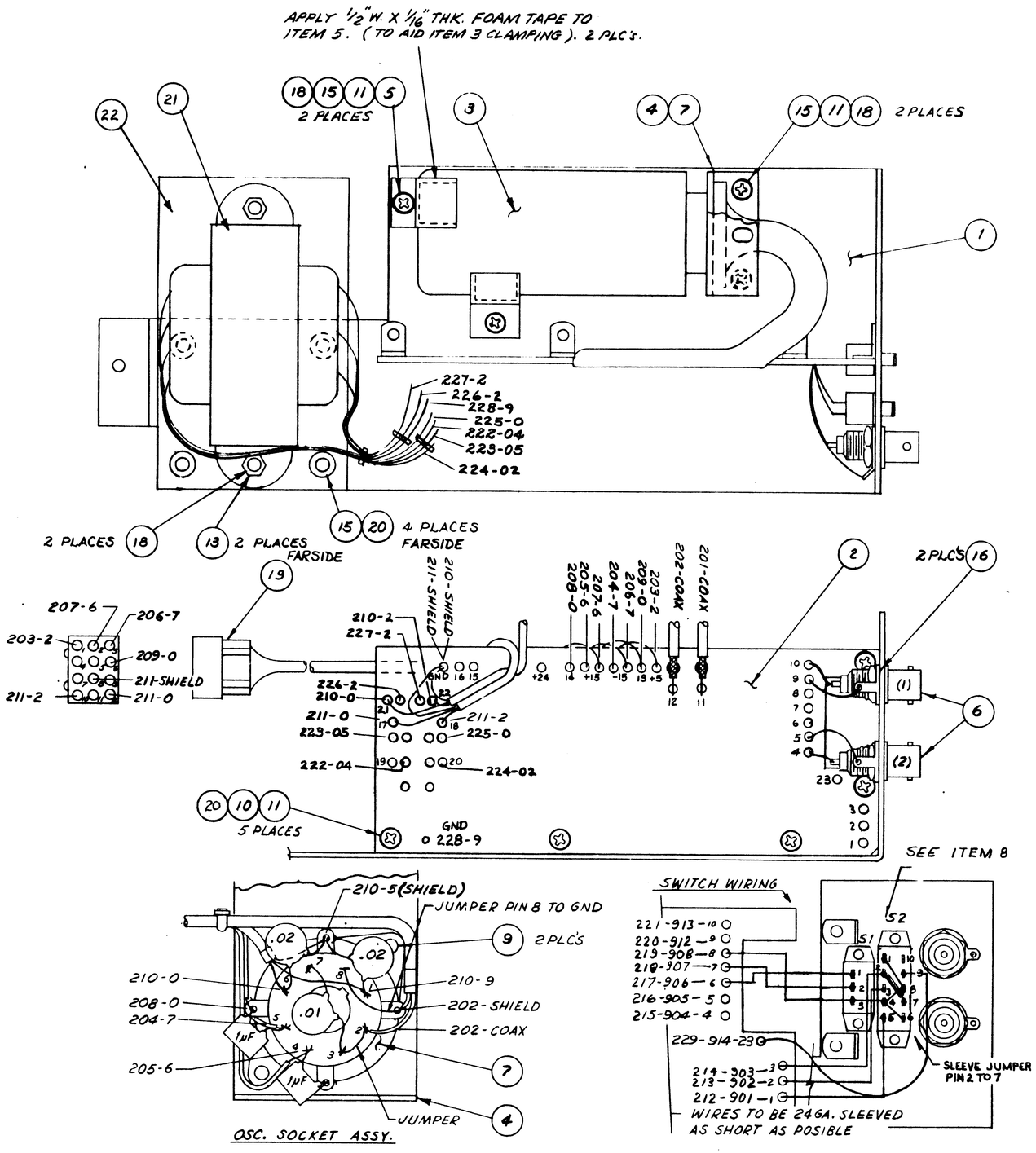

ITEM NO.	QTY	PART NUMBER	DESCRIPTION	SCHEMATIC REF. NO.
23	1	100103	CAP., .01μf-100V	C101
22	1	A075485	XFMR PLATE	
21	1	116934	XFMR UN68X	
20	9	100712	WASHER #6 SPLIT	
19	1	102808	MOLEX, 12 PIN MALE	
18	6	100706	NUT, KEP #6	
17				
16	2	107077	BNC SOLDER LUG	
15	8	10063205	SCREW PHMS 6-32 x 5/16	
14	2	100176	CAPACITOR, 1μF	C102 & C103
13	2	10073104	SCREW FHM 6-32 x 1/4	
12	2	106489	CAPACITOR, .02μF	C104 & C105
11	9	100704	WASHER, FLAT # 6	
10	5	10063204	SCREW PHMS 6-32 x 1/4	
9	2	100645	RIVET 1/8 x 1/8	
8	1	A057561	CLOCK OSC. ASSY LOOSE W/L	
7	1	102408	8 PIN OCTAL SOCKET	
6	2	101155	BNC CONNECTOR	
5	2	A067492	OSCILLATOR CLAMP	
4	1	B075498	OSCILLATOR MTG. BKT	
3	1	067401	OSCILLATOR	U105
2	1	B05754001	OSCILLATOR CONTROL PCB	A5
1	1	D057524	OSCILLATOR CHASSIS	

FIGURE 7-48
A5, STANDARD CLOCK
OSCILLATOR PCB
ASSEMBLY 5756001

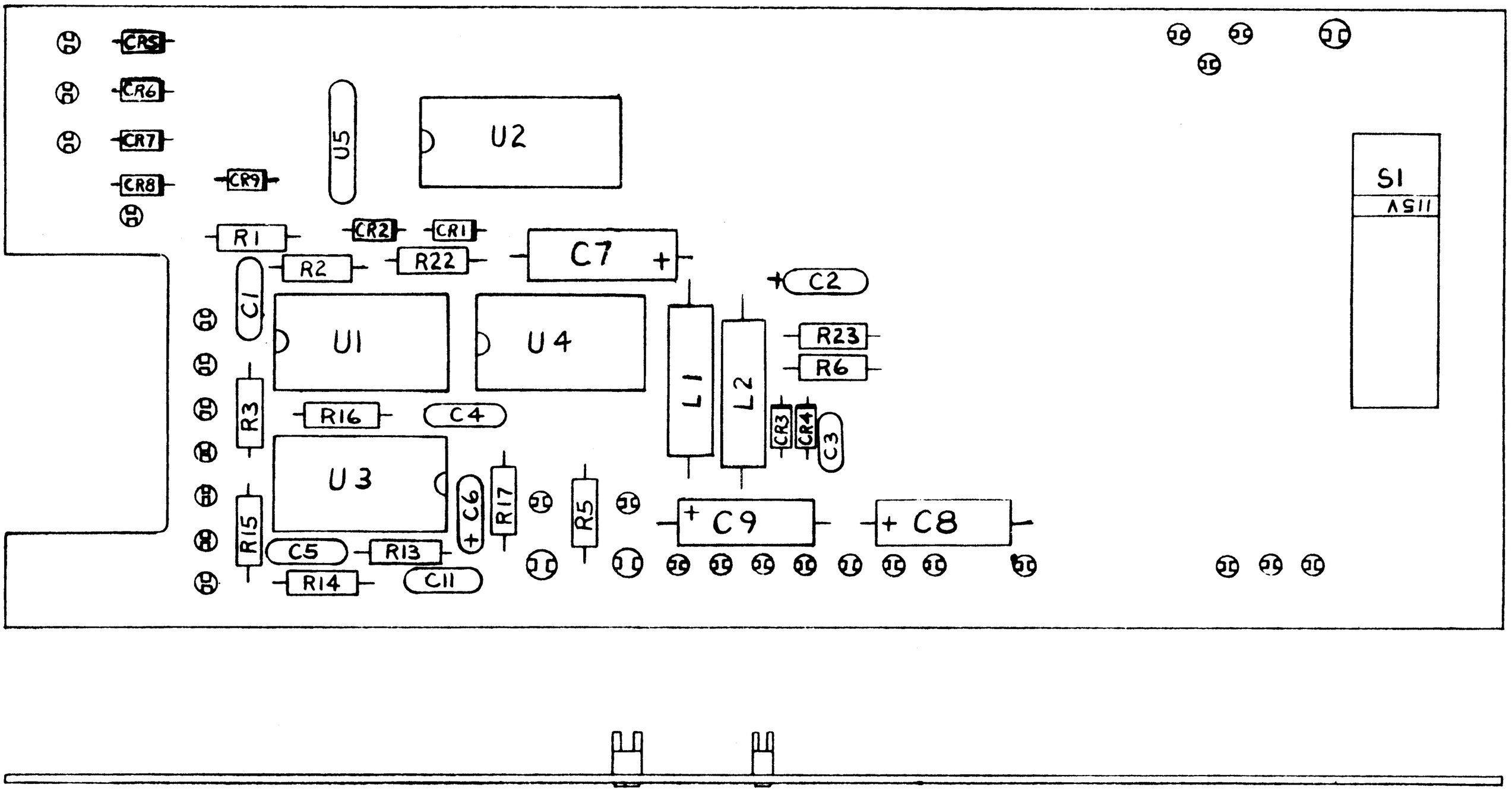

FIGURE 7-49
A5A1, STANDARD OSCILLATOR
CONTROL PCB
ASSEMBLY 5754001

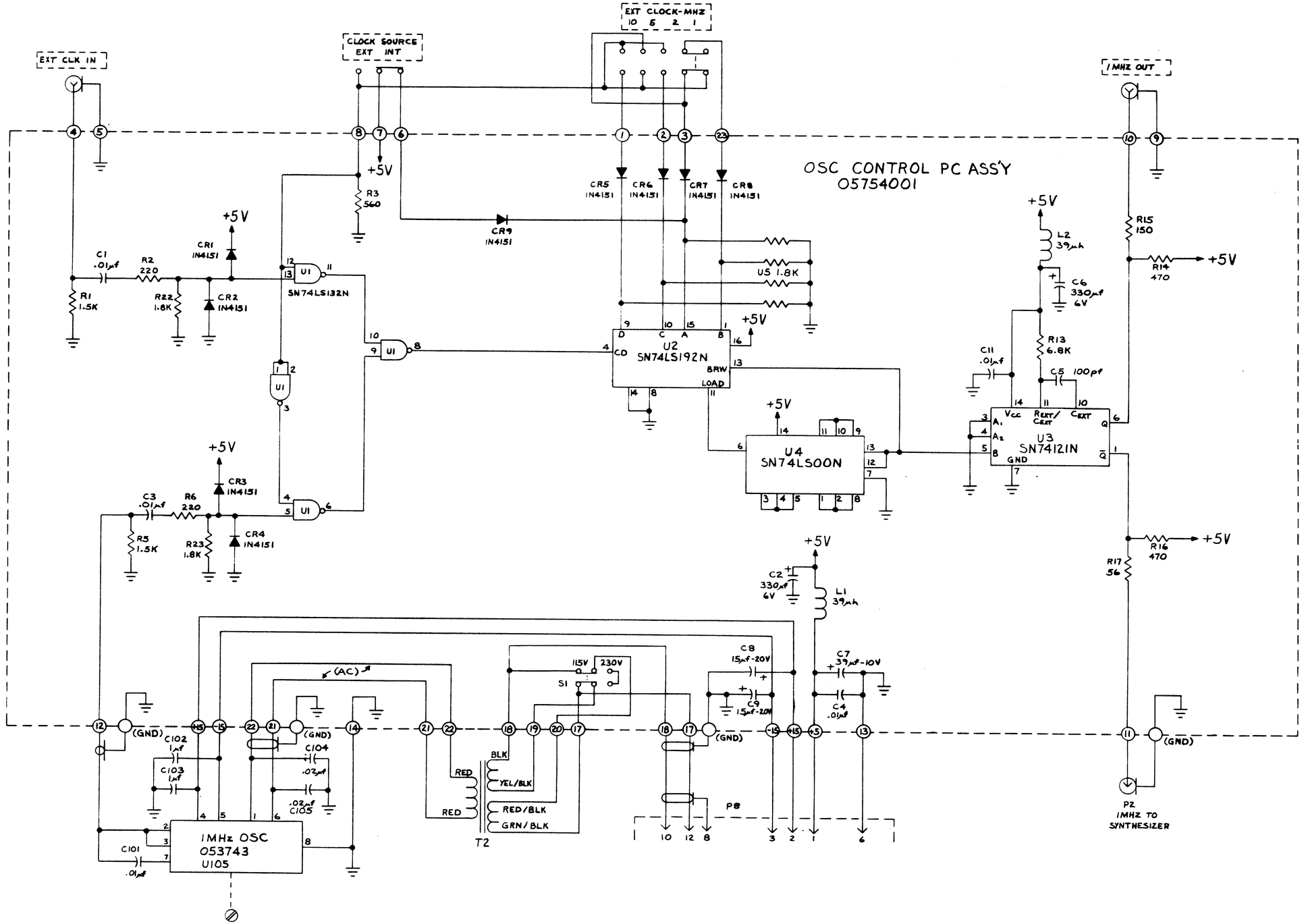

FIGURE 7-50
A5A1, STANDARD OSCILLATOR
CONTROL PCB
SCHEMATIC 7-05756001

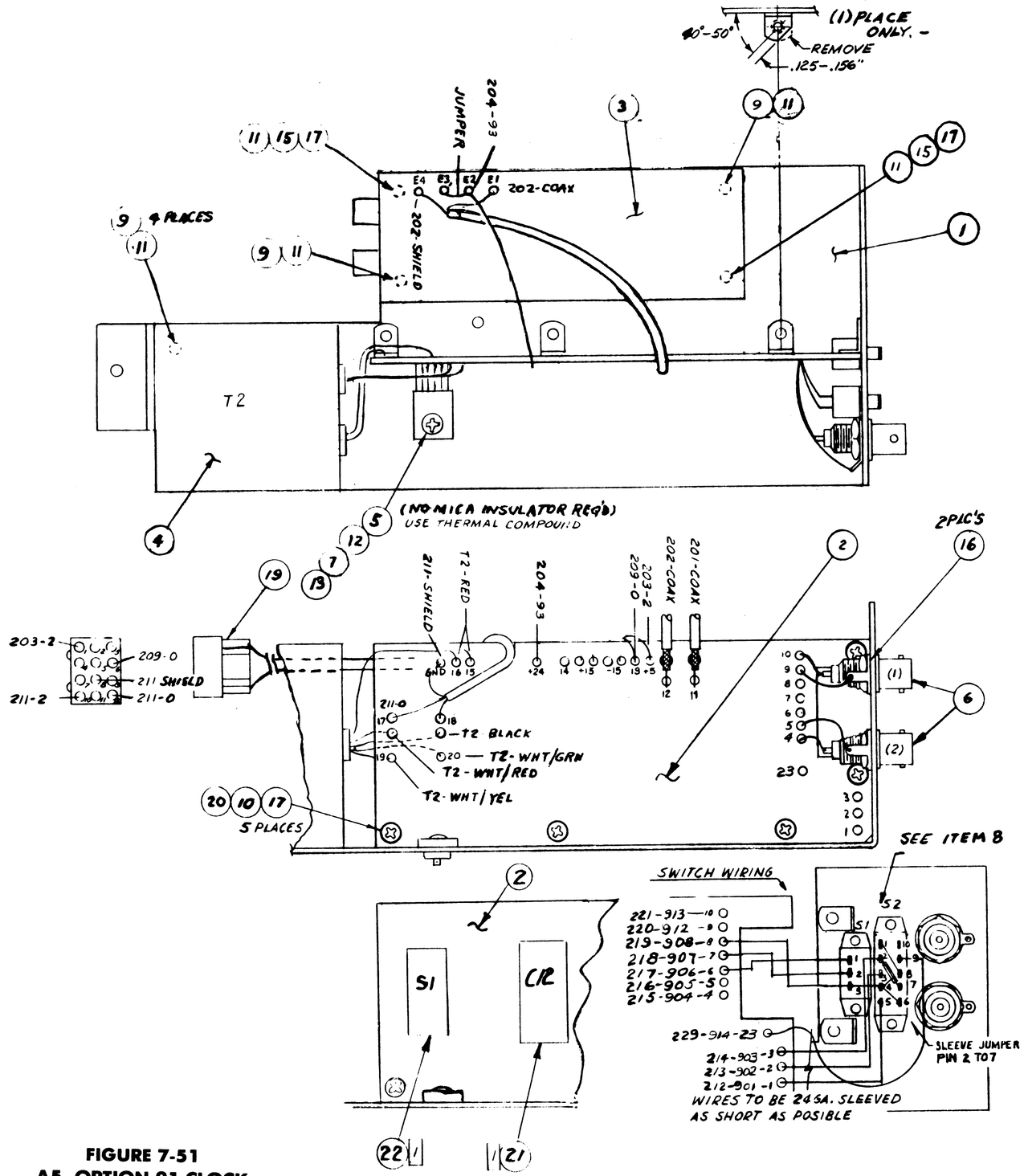

FIGURE 7-51
A5, OPTION 01 CLOCK OSCILLATOR PCB ASSEMBLY 05756003

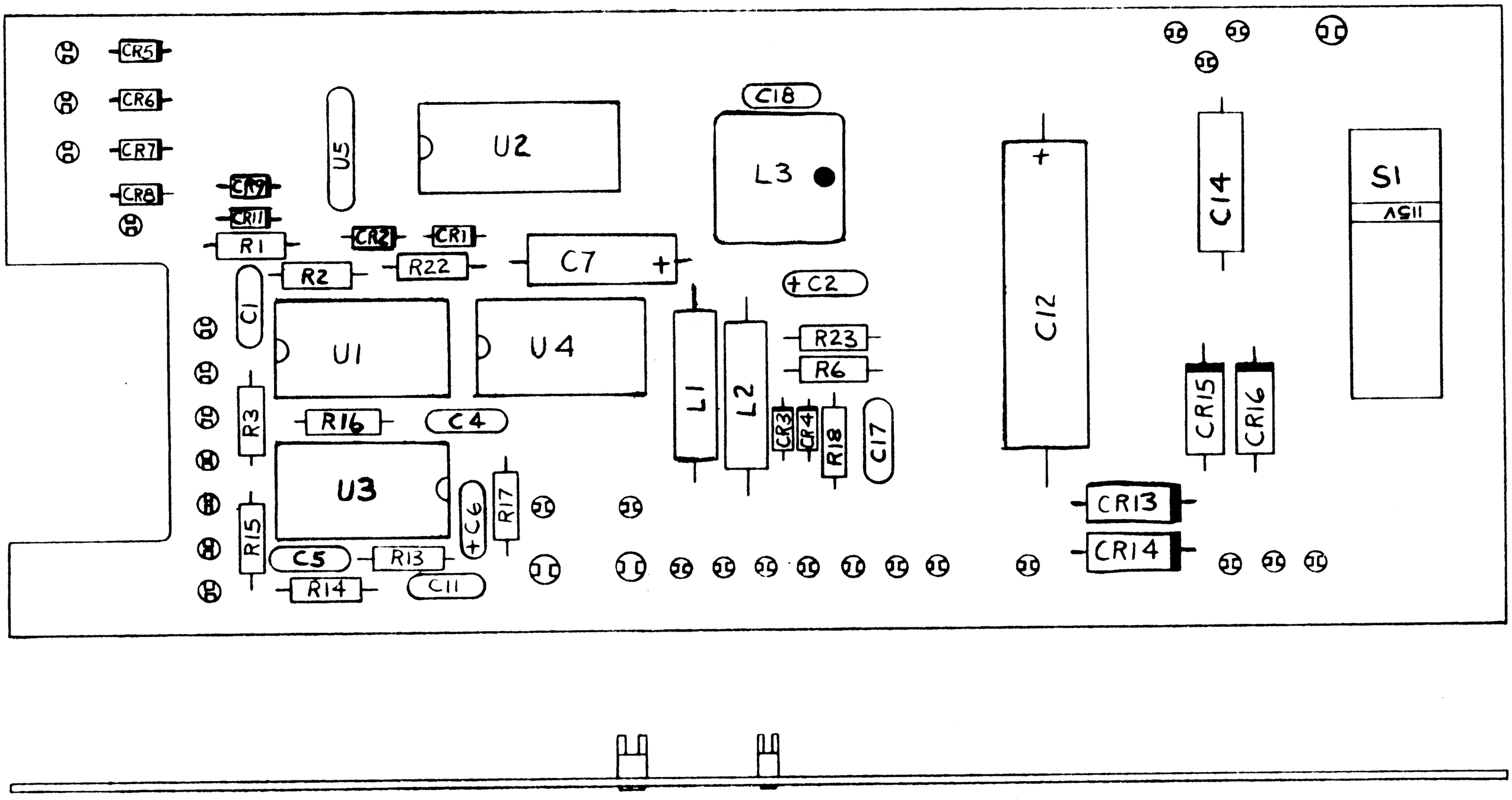

FIGURE 7-52
A5A1 OPTION 01 OSCILLATOR
CONTROL PCB
ASSEMBLY 05754003

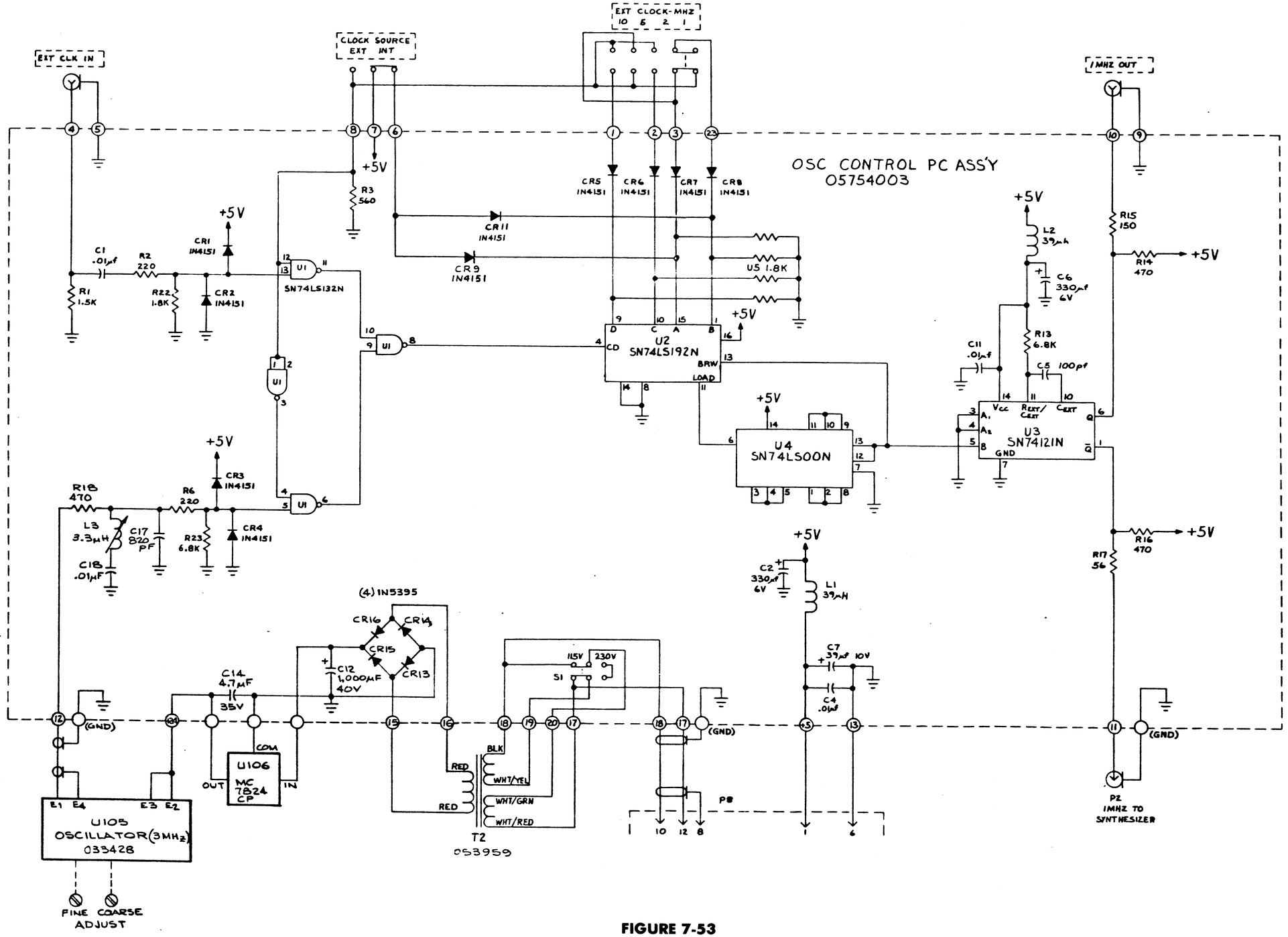

FIGURE 7-53
A5A1, OPTION 01 OSCILLATOR
CONTROL PCB
SCHEMATIC 7-05756003

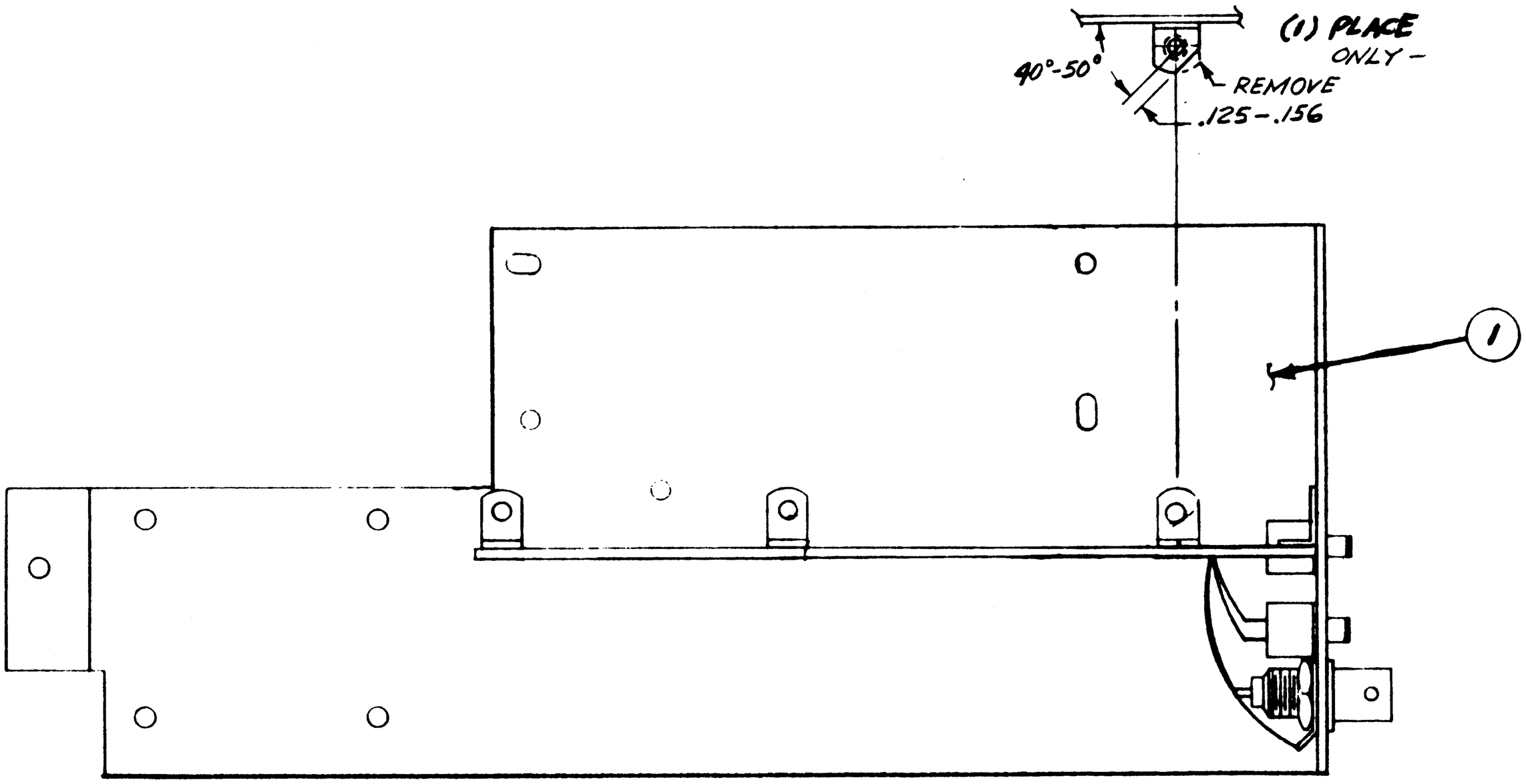

FIGURE 7-54
A5, OPTION 02 CLOCK OSCILLATOR
ASSEMBLY 05756002

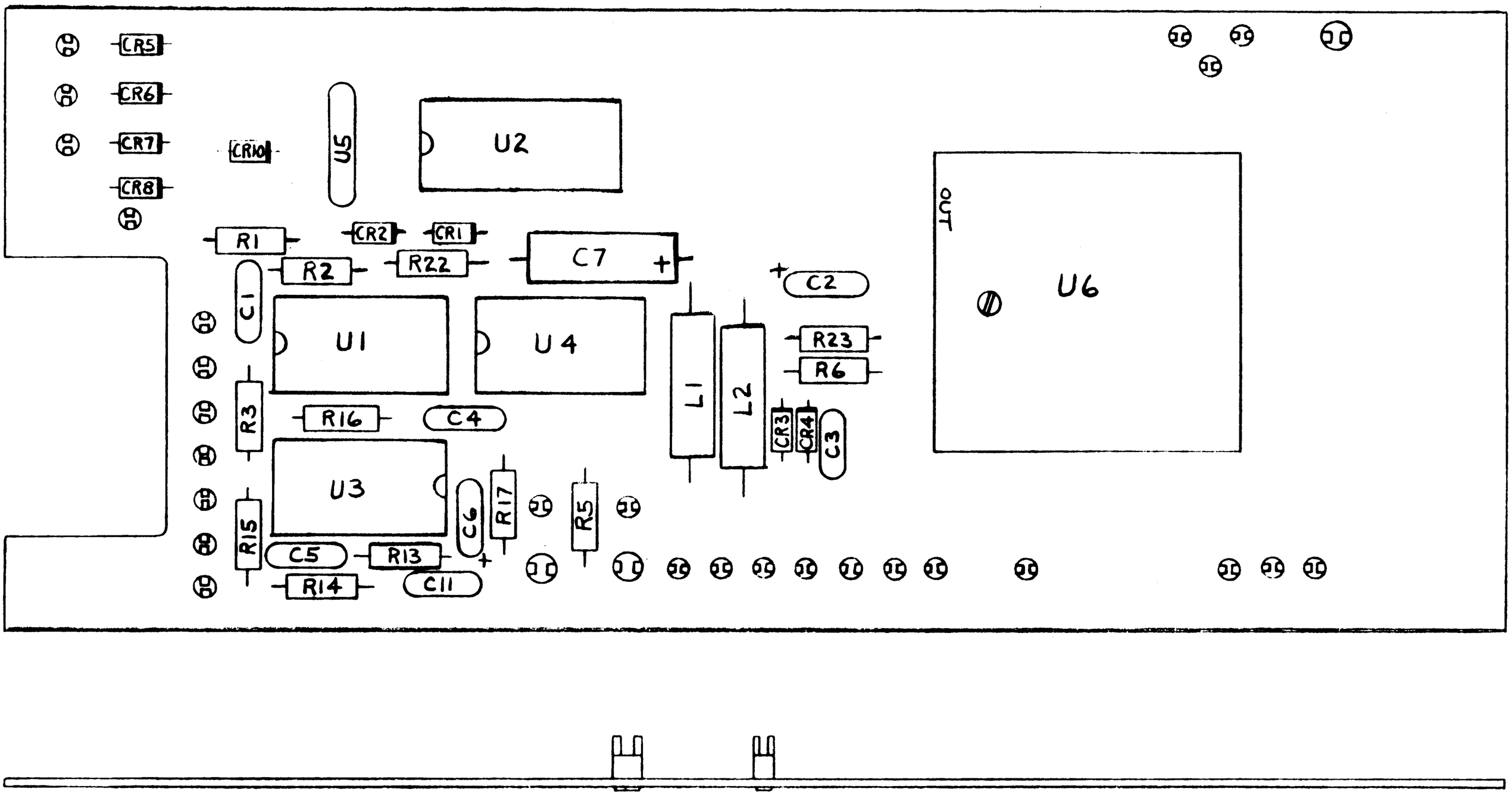

FIGURE 7-55
A5A1, OPTION 02 OSCILLATOR
CONTROL PCB
ASSEMBLY 05754002

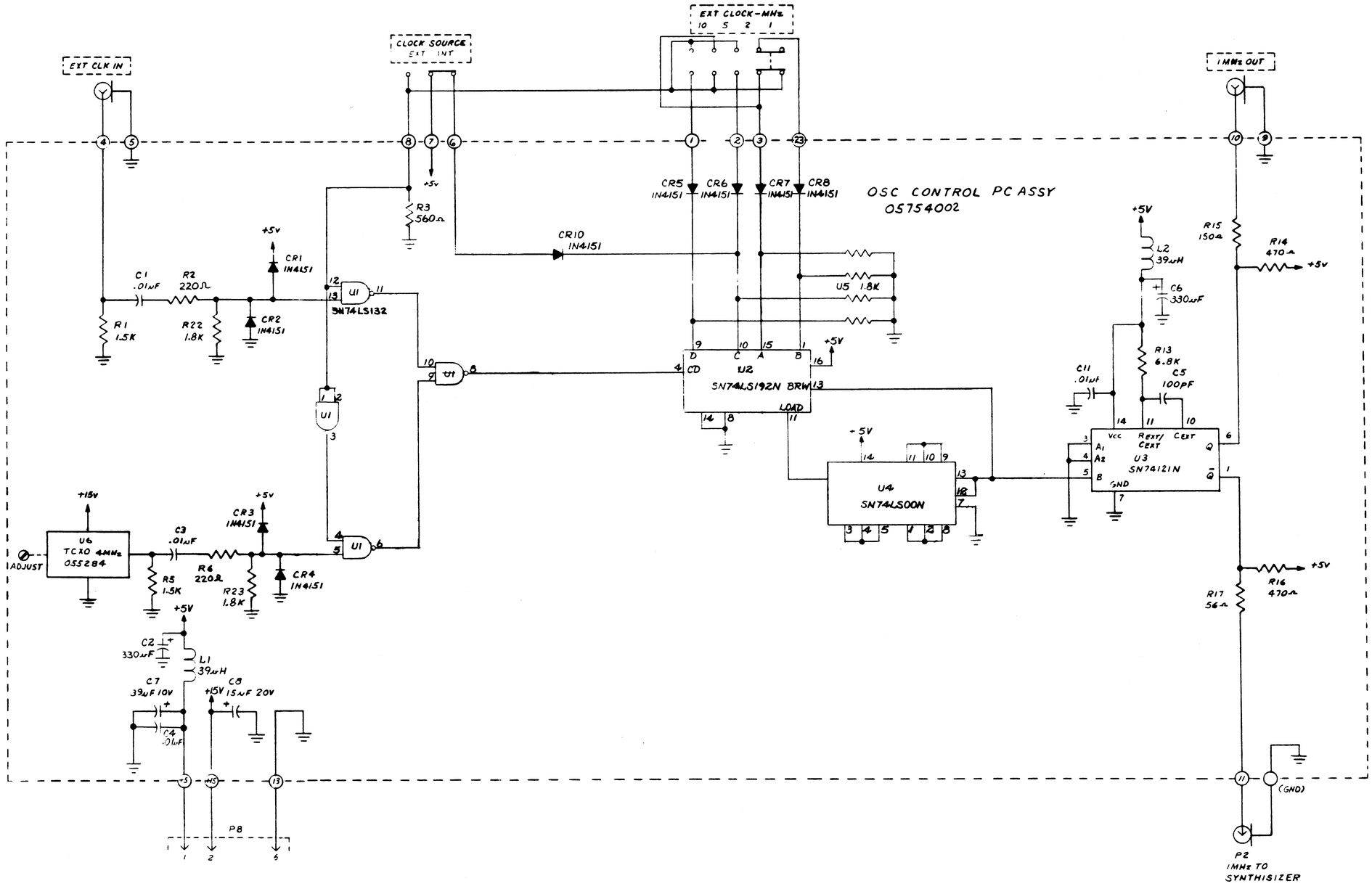

FIGURE 7-56
A5A1, OPTION 02 OSCILLATOR CONTROL PCB SCHEMATIC 7-05756002

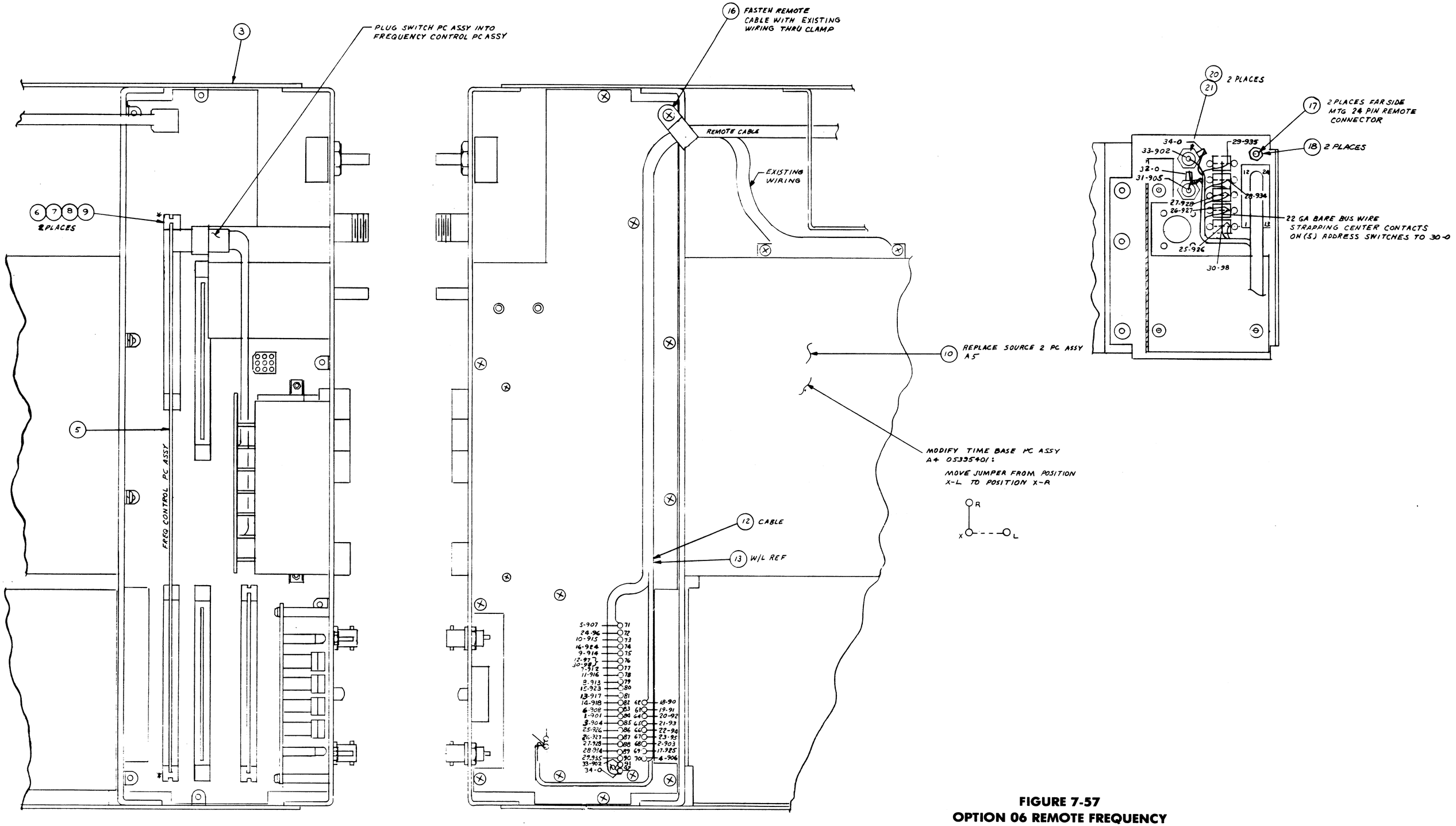

FIGURE 7-57
OPTION 06 REMOTE FREQUENCY CONTROL INSTALLATION
057924

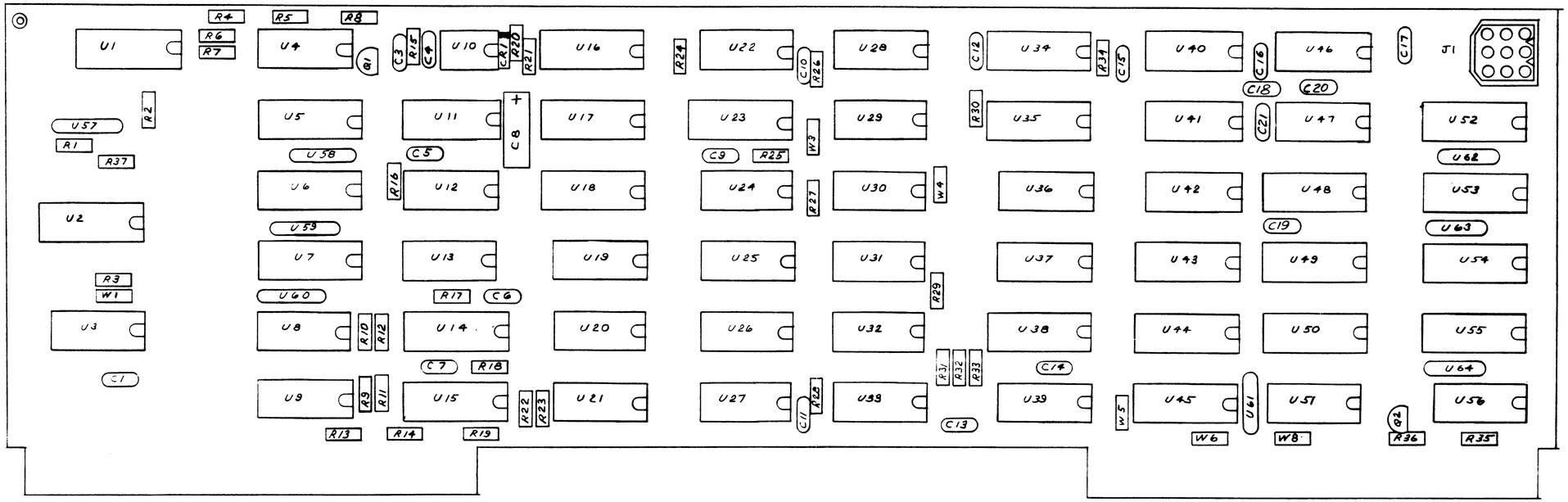

FIGURE 7-58
A3A4, OPTION 06 REMOTE FREQUENCY CONTROL PCB ASSEMBLY 05784101

PROGRAM

INTEGRATED CIRCUIT TABULATION							
U NO.	TYPE	GND	+5v	U NO	TYPE	GND	+5v
U 1	F 93L24	8	16	U 16	MC 14028 BCP	8	16
U 4	SN 74 LS14 N	7	14	U 17	MC 14028 BCP	8	16
U 5	MC 3446 P	8	16	U 18	MC 14028 BCP	8	16
U 6	MC 3446 P	8	16	U 19	MC 14011	7	14
U 7	MC 3446 P	8	16				

COMPONENT ORIENTATION

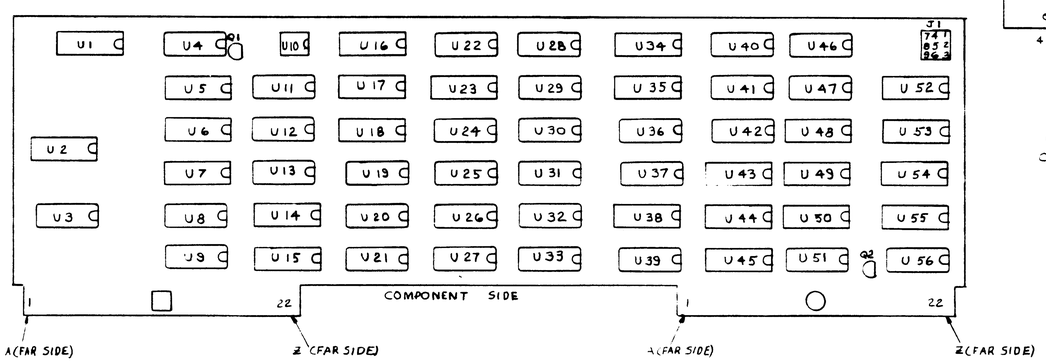

FIGURE 7-59A
A3A4, OPTION 06 REMOTE FREQUENCY CONTROL PCB SCHEMATIC 7-05784101 (Sheet 1 of 3)

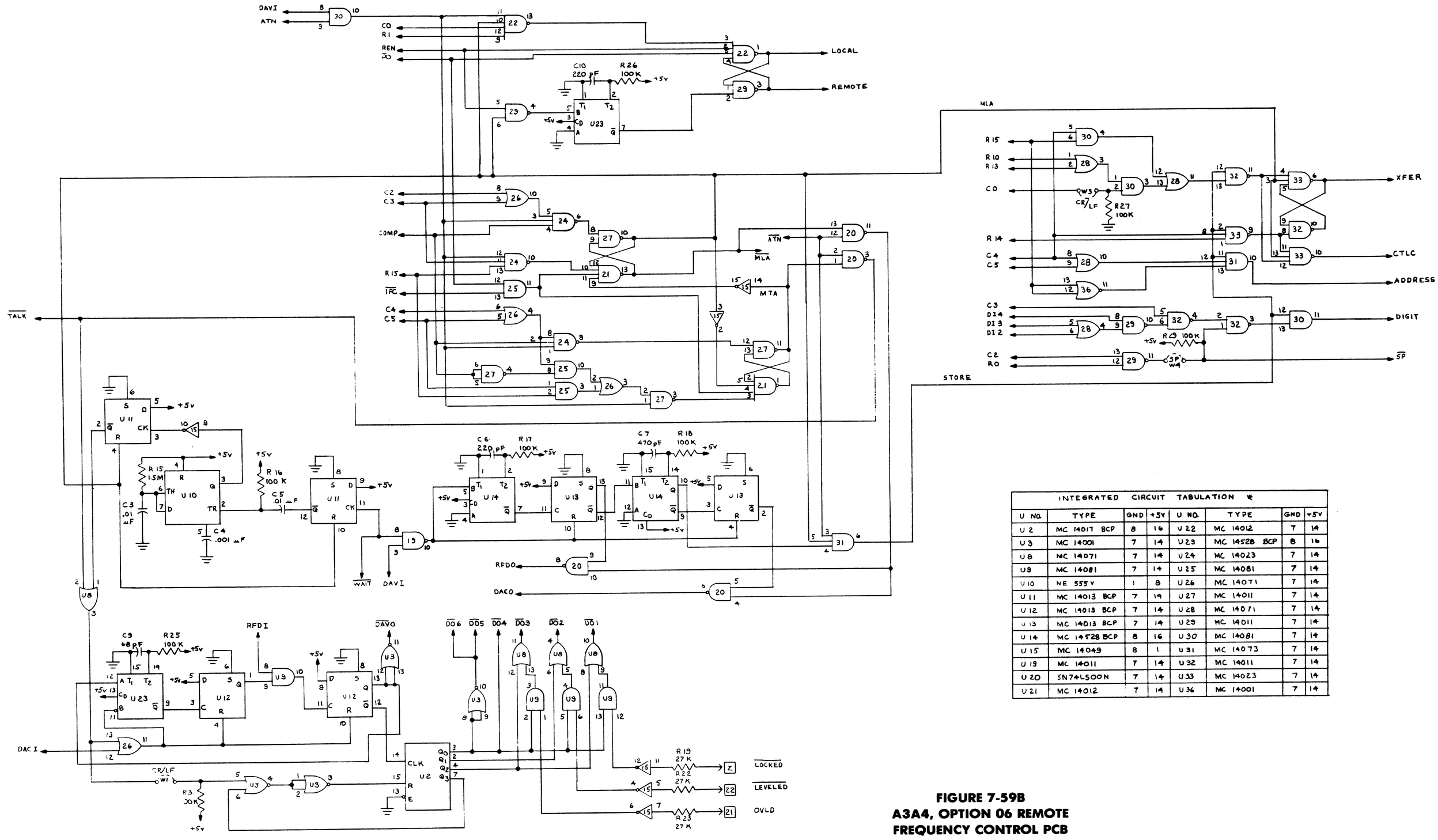

INTEGRATED CIRCUIT TABULATION *							
U NO.	TYPE	GND	+5v	U NO.	TYPE	GND	+5v
U 2	MC 14017 BCP	8	16	U 22	MC 14012	7	14
U 3	MC 14001	7	14	U 23	MC 14528 BCP	8	16
U 8	MC 14071	7	14	U 24	MC 14023	7	14
U 9	MC 14081	7	14	U 25	MC 14081	7	14
U 10	NE 555 V	1	8	U 26	MC 14071	7	14
U 11	MC 14013 BCP	7	14	U 27	MC 14011	7	14
U 12	MC 14013 BCP	7	14	U 28	MC 14071	7	14
U 13	MC 14013 BCP	7	14	U 29	MC 14011	7	14
U 14	MC 14528 BCP	8	16	U 30	MC 14081	7	14
U 15	MC 14049	8	1	U 31	MC 14073	7	14
U 19	MC 14011	7	14	U 32	MC 14011	7	14
U 20	SN74LS00N	7	14	U 33	MC 14023	7	14
U 21	MC 14012	7	14	U 36	MC 14001	7	14

FIGURE 7-59B
A3A4, OPTION 06 REMOTE
FREQUENCY CONTROL PCB
SCHEMATIC 7-05784101
(Sheet 2 of 3)

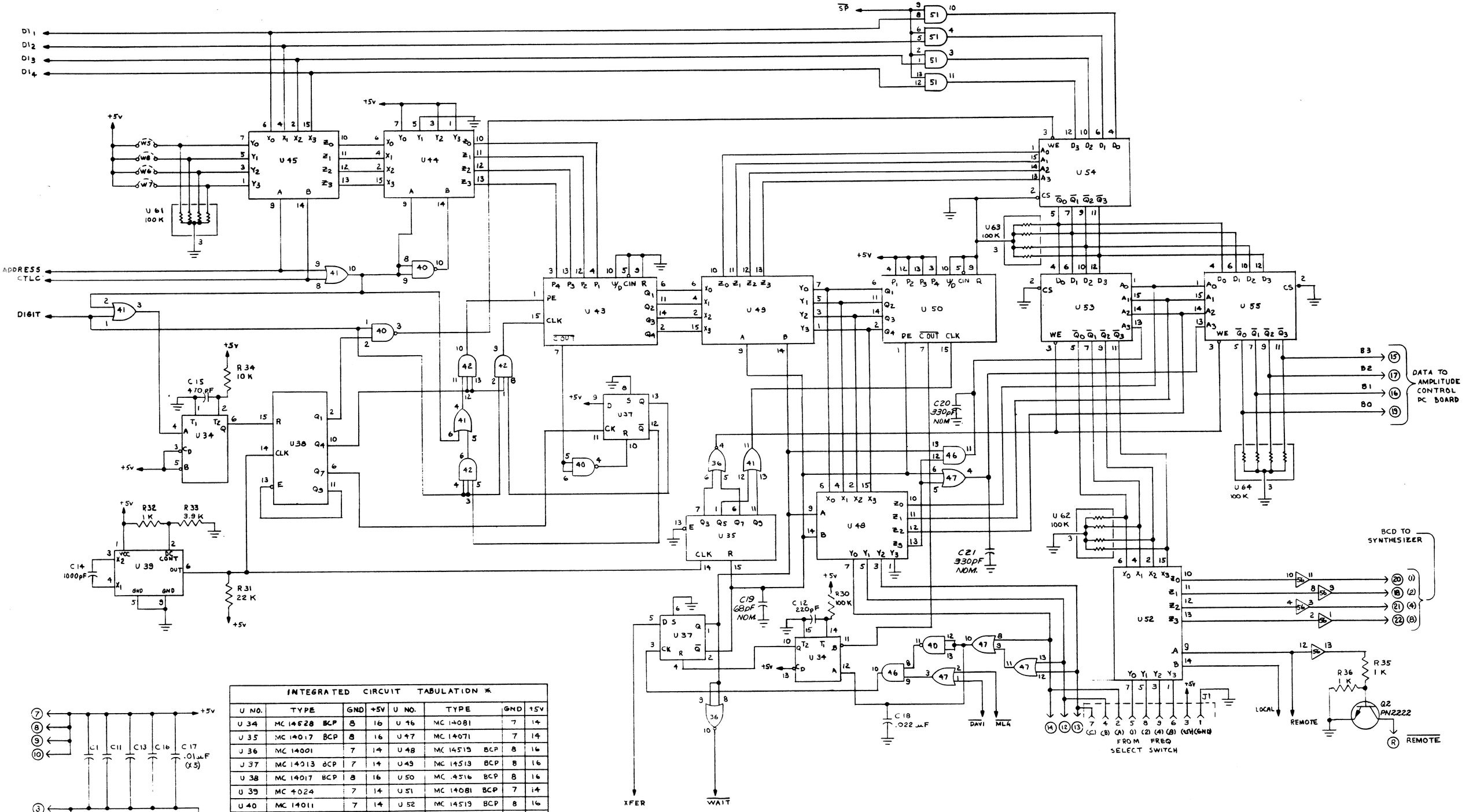

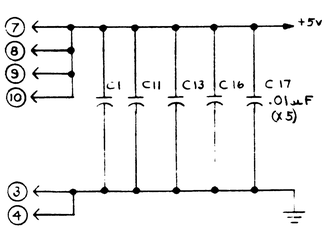

INTEGRATED CIRCUIT TABULATION *

U NO.	TYPE	GND	+5V	U NO.	TYPE	GND	+5V
U 34	MC 14528 BCP	8	16	U 46	MC 14081	7	14
U 35	MC 14017 BCP	8	16	U 47	MC 14071	7	14
U 36	MC 14001	7	14	U 48	MC 14519 BCP	8	16
U 37	MC 14013 BCP	7	14	U 49	MC 14519 BCP	8	16
U 38	MC 14017 BCP	8	16	U 50	MC 4516 BCP	8	16
U 39	MC 4024	7	14	U 51	MC 14081 BCP	7	14
U 40	MC 14011	7	14	U 52	MC 14519 BCP	8	16
U 41	MC 14071	7	14	U 53	F 4725	8	16
U 42	MC 14073	7	14	U 54	F 4725	8	16
U 43	MC 14516 BCP	8	16	U 55	F 4725	8	16
U 44	MC 14519 BCP	8	16	U 56	DS 3630 N	7	14
U 45	MC 14519 BCP	8	16				

FIGURE 7-59C
A3A4, OPTION 06 REMOTE FREQUENCY CONTROL PCB SCHEMATIC 7-05784101

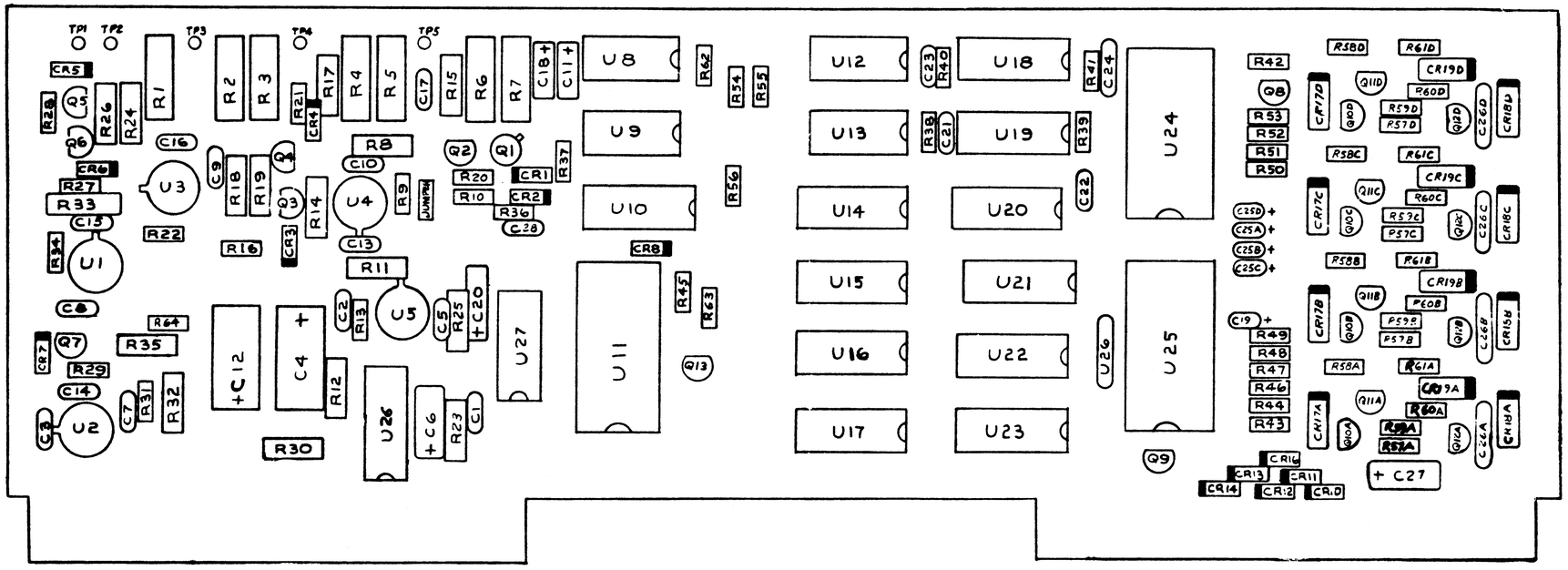

FIGURE 7-60
A3A5, OPTION 07 REMOTE
AMPLITUDE CONTROL PCB
ASSEMBLY 05797101

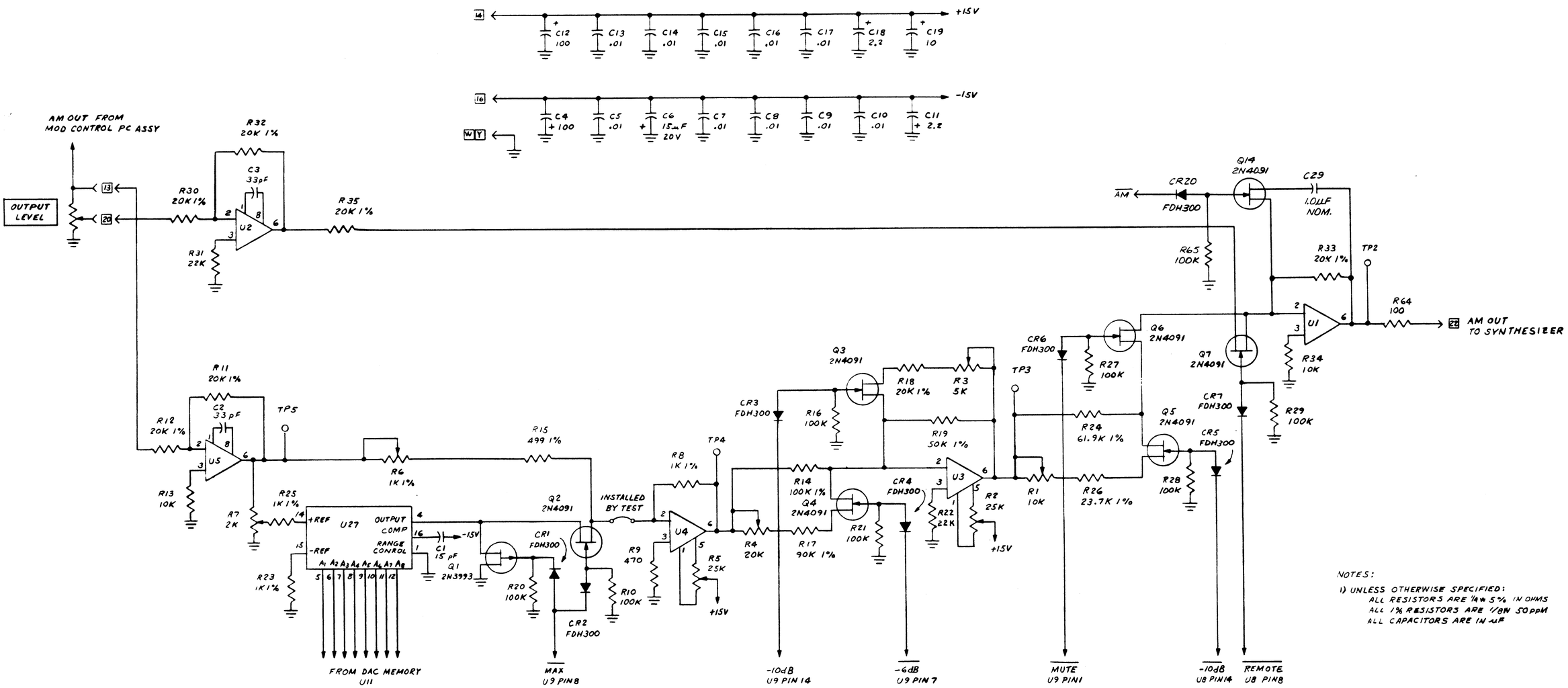

NOTES:

1) UNLESS OTHERWISE SPECIFIED:
   ALL RESISTORS ARE 1/4W 5% IN OHMS
   ALL 1% RESISTORS ARE 1/8W 50ppM
   ALL CAPACITORS ARE IN µF

I.C. TYPE & POWER LEGEND					
U Nº	TYPE	+15V	-15V	+5V	GND
U1	LF355	7	4	—	—
U2	LM201	7	4	—	—
U3	LF355	7	4	—	—
U4	LF355	7	4	—	—
U5	LM201	7	4	—	—
U27	MC1408	—	3	13	2

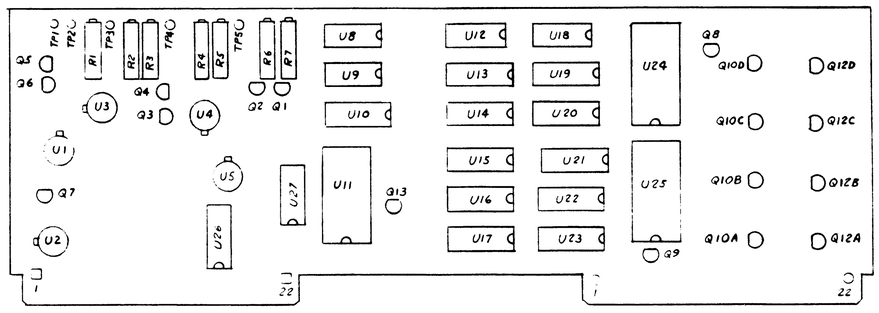

FIGURE 7-61A
A3A5, OPTION 07 REMOTE AMPLITUDE CONTROL PCB SCHEMATIC 7-05797101
(Sheet 1 of 2)

I.C. TYPE & POWER LEGEND							
UNIT	TYPE	+15V	-15V	UNIT	TYPE	+5V	GND
U8	4741CP	4	11	U17	MC14560	16	8
U9	4741CP	4	11	U18	MC14528	16	8
		+5V	GND	U19	MC14528	16	8
U10	MC14049	1	8	U20	CD4099	16	8
U11	MMI6336-1	24	12	U21	CD4099	16	8
U12	MC14081	14	7	U22	CD4099	16	8
U13	MC14071	14	7	U23	CD4099	16	8
U14	MC14560	16	8	U24	MMI6336-1	24	12
U15	MC6301	16	8	U25	MMI6336-1	24	12
U16	MC14560	16	8	U26	MC14028	16	8

NOTES: UNLESS OTHERWISE SPECIFIED
1) ALL RESISTORS ARE IN OHMS 1/4W 5%. ALL CAPACITORS ARE IN µF.
2) U11, MMI6336-1 PROG. PER 07519301
3) U24 " " 07519302
4) U25 " " 07519303
5) U15 MMI6301 " 07519401

FIGURE 7-61B
A3A5, OPTION 07 REMOTE AMPLITUDE CONTROL PCB SCHEMATIC 05797101 (Sheet 2 of 2)

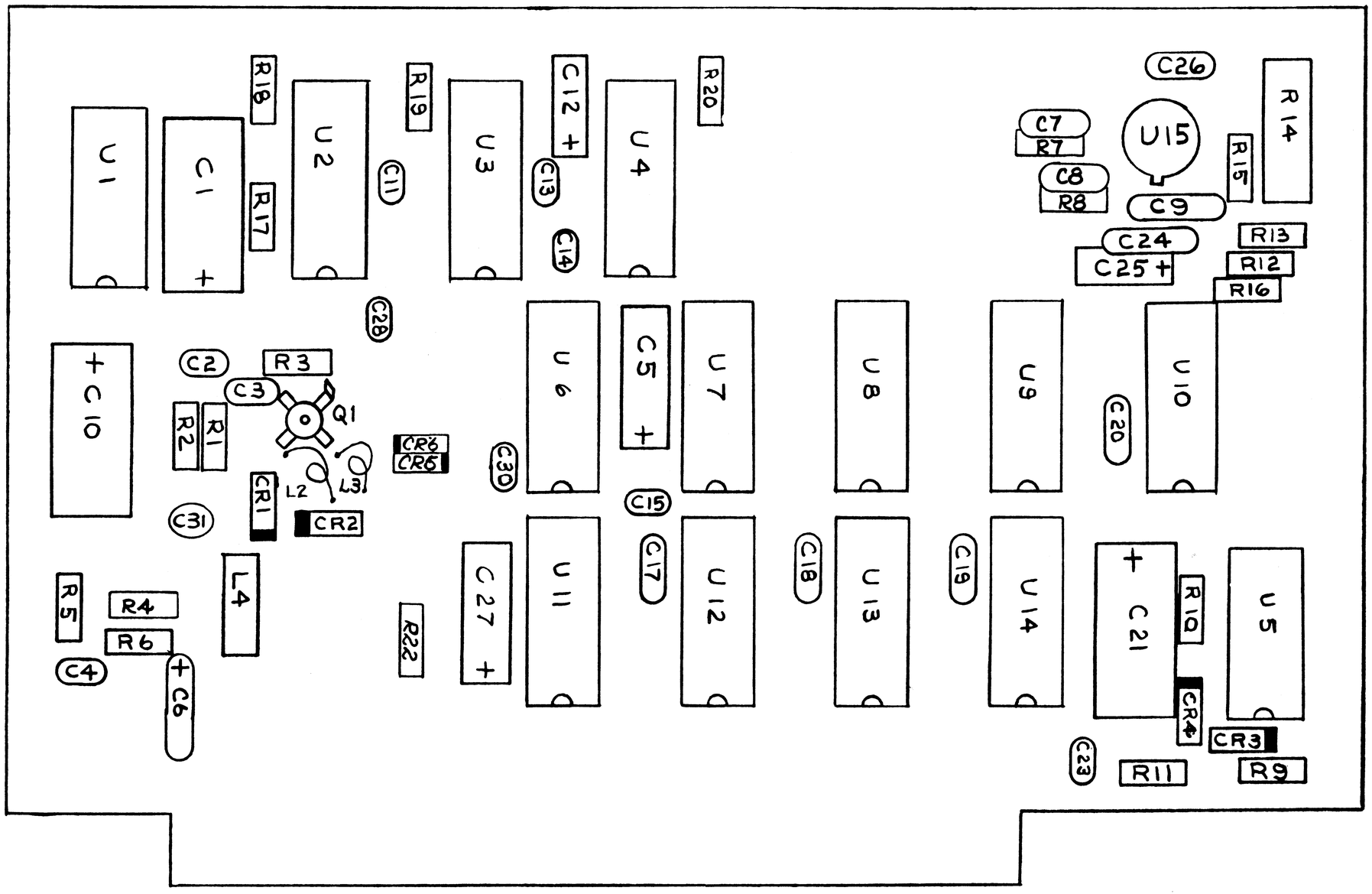

FIGURE 7-62
A4A5, OPTIONS 06, 07
SOURCE #2 PCB
ASSEMBLY 06700501

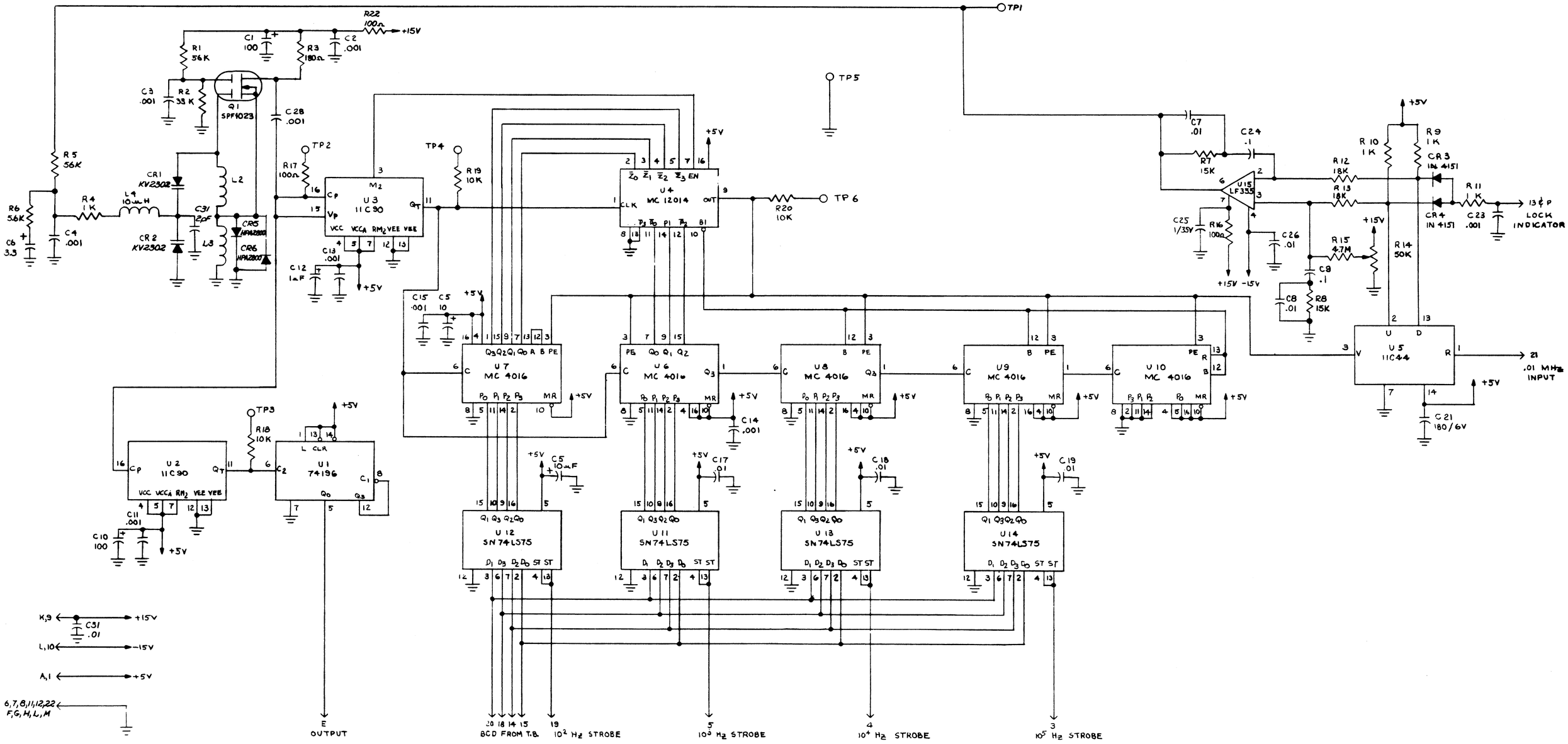

NOTE:

1) ALL CAPACITOR VALUES ARE IN μF.

FIGURE 7-63
A4A5, OPTIONS 06, 07
SOURCE #2 PCB
SCHEMATIC 7-06700501

SYSTRON DONNER
Member THORN EMI Group

MODEL 1702
CALIBRATION ADDENDUM

INSTRUMENT DIVISION

ADDENDUM

Calibration Addendum 2-89.

Due to the availability of improved test equipment since this manual was first published, certain changes in the calibration procedure are recommended to save operator time.

It should be noted that in certain instances the recommended calibration limits are tighter than the unit's guaranteed performance. This is to ensure that the best possible performance is attained after calibration. It is obviously necessary to cross-check with the guaranteed specifications of Chapter 1 if problems are encountered meeting the tighter calibration specs.

It is recommended that the following notes are used in conjunction with the calibration procedure of Chapter 5. Note that in the instances where TYPOS are listed the changes must be made in the procedure.

1] In step 5.5.1 it is recommended that the step attenuator be set to the 20 dB position when driving a counter to improve VSWR match and reduce the likelihood of over-driving the counter.

2] In step 5.5.3 it is now considered unnecessary to use a spectrum analyzer. The preferred calibration method is simply to adjust the potentiometer to just extinguish the LED.

3] Step 5.5.4 This and most other power measurement steps in the procedure that use the spectrum analyzer can better be performed directly on the HP 8902A Measuring Receiver. Note that steps 4 to 7 are interactive and may need to be repeated until both limits are achieved.

2727 Systron Drive • Concord, California 94518 • U.S.A.
Tel: (415)676-5000 • TWX: 910-481-9479 • Cable: SYSTRON DONNER
FSCM No. 52542

Copyright ©1198. Systron Donner
Printed in U.S.A.

4] TYPO Step 5.5.16 No frequency is given: unit should be set to 10 MHz for this test. DVM reading is +2V, not -2V.

5] TYPO Step 5.5.17 Detector Null is A3A3R41, not R55. Display Null is R55 (correctly listed).

6] TYPO Step 5.5.18 Unit should be set to 150.1 MHz (no frequency listed). Adjust for 9.80 kHz. (This change is because later specifications are to include residual FM, which is around 200 Hz.) There is no need to repeat this step.

7] Delete para 5.5.19 (†). Para 5.5.20 only verify at 2080 and 4160 Hz. (The 8020 Hz null is actually over 20 KHz and beyond the specified range).
There should be no need to readjust the potentiometers.

8] Step 5.5.23, 24. For improved accuracy and speed of testing it is recommended that the HP 8902A Measuring Receiver be used to measure AM depth. Verify the values as on the data sheet, noting that AM is only specified up to 10 KHz and performance beyond that is for reference only.

9] Step 5.5.28, 29. Set the attenuator to its 120 dB position before connecting the power supply. Return the power supply to 0V before resetting; at 5V the overload circuit is on its spec limit for tripping, and may not reset. These steps are interactive and may need to be repeated.

Test Data Sheet. The comments above also apply to the test data sheet, and the Sheet should be adjusted accordingly. Note TYPOS: Para 8 should be A3A3R33; para 18 should be 9.80 KHz (as discussed in the text above) and 4160 Hz rate. Additionally it should be noted that absolute values for power are given; only level flatness is actually specified, but these figures are suitable goals for calibration.

END

(†) para 5.5.19

19. With the EXT MOD SOURCE and FM MODULATION selected, set the Audio Synthesizer to 2080 Hz. Slowly increase the EXT MOD control from minimum, watching for the first carrier null on the Analyzer. Then adjust A3A3R41 (DET NULL) for a 05.00 kHz indication on the Front Panel 3-1/2 digits display.

SYSTRON DONNER
Member THORN EMI Group

MODEL 1702

INSTRUMENT DIVISION

ADDENDUM

MODEL 1702 RETROFIT

The enclosed Model 1702 Operating and Service Manual has been upgraded to include ECO's 17882, 17873, 19111 and 19099, and the modifications as detailed below. The new parts list Chapter 6 and drawing package Chapter 7 reflect these changes.

Modifications to the 1702 Signal Generator:

The specifications in Table 1-1 have been revised to show the modifications agreed to in FDSP's telex no. RBT 28.273/1 dated 20 Oct 1987.

The following pc assemblies have been modified to improve performance:

1] A5A1, Clock Oscillator 05756003.
2] A4A2, 10 MHz VCO 05566201.
3] A4A14, Amplifier 05392901.

The drawings and parts lists have been updated and installed in this manual. The modifications are as follows:

1] Clock Oscillator Assy 05756003
R23 has been increased in value from 1800 ohms to 6800 ohms. This allows an increase in signal level, leading to a wider noise margin.

2] 10 MHz VCO Assy 05566201
R66 (10 kΩ) has been added in series with C7 in the feedback around U2. This puts a pole in the frequency response of the FM modulation circuitry to correct a tendency for the FM sensitivity to increase with increasing FM modulation rate.

2727 Systron Drive • Concord, California 94518 • U.S.A.
Tel: (415)676-5000 • TWX: 910-481-9479 • Cable: SYSTRON DONNER
FSCM No. 52542

Copyrigh' ©1198. Systron Donner
Printed in U.S.A.

3] Amplifier Assy 05392901
C45 (100 pF chip cap) has been added in parallel with C3. This improves the AM depth capability at higher RF frequencies by reducing the impedance to ground when shunt PIN diode CR3 is turned on. This is because the inductance of the leads of C3 forms a significant impedance at the upper range of the synthesizer.

R1 and R3 have been changed from 10 kΩ to 33 kΩ. This alters the operating point of the levelling/AM PIN diodes CR1, CR2, CR3 for improved AM performance.

C46 (100 pF ceramic dip capacitor) and R52 (68 kΩ) added to flatten AM frequency response in downconverter; previously response had a dip at 5 kHz modulation rate.
Changed mixer U4 from SAM1 to SAM2 and removed buffer amplifier Q10 and associated bias components; improves spurious performance at top end of downconverter band (99-110 MHz approx.). An additional strip of beryllium-copper "fingers" added to improve grounding, for further spurious reduction.