Tektronix®
COMMITTED TO EXCELLENCE

PLEASE CHECK FOR CHANGE INFORMATION AT THE REAR OF THIS MANUAL.

7B87
TIME BASE
WITH
PRETRIGGER
ACQUIRE CLOCK

INSTRUCTION MANUAL

Tektronix, Inc.
P.O. Box 500
Beaverton, Oregon 97077

070-2788-00
Product Group 42

Serial Number _____

First Printing APR 1980
Revised JAN 1986

Copyright © 1980 Tektronix, Inc. All rights reserved. Contents of this publication may not be reproduced in any form without the written permission of Tektronix, Inc.

Products of Tektronix, Inc. and its subsidiaries are covered by U.S. and foreign patents and/or pending patents.

TEKTRONIX, TEK, SCOPE-MOBILE, and are registered trademarks of Tektronix, Inc. TELEQUIPMENT is a registered trademark of Tektronix U.K. Limited.

Printed in U.S.A. Specification and price change privileges are reserved.

INSTRUMENT SERIAL NUMBERS

Each instrument has a serial number on a panel insert, tag, or stamped on the chassis. The first number or letter designates the country of manufacture. The last five digits of the serial number are assigned sequentially and are unique to each instrument. Those manufactured in the United States have six unique digits. The country of manufacture is identified as follows:

B000000	Tektronix, Inc., Beaverton, Oregon, USA
100000	Tektronix Guernsey, Ltd., Channel Islands
200000	Tektronix United Kingdom, Ltd., London
300000	Sony/Tektronix, Japan
700000	Tektronix Holland, NV, Heerenveen, The Netherlands

TABLE OF CONTENTS

PAGE

LIST OF ILLUSTRATIONS iii
LIST OF TABLES iv
OPERATORS SAFETY SUMMARY v
SERVICING SAFETY SUMMARY vii

SECTION 1—OPERATING INSTRUCTIONS
INSTALLATION 1-1
CONTROLS, CONNECTORS, AND INDICATORS 1-1
FUNCTIONAL CHECK 1-1
SETUP PROCEDURE 1-1
SWEEP FUNCTIONS 1-4
TRIGGERING FUNCTIONS 1-4
PRETRIGGER ACQUIRE CLOCK FUNCTIONS 1-5
GENERAL OPERATING INFORMATION 1-6
TRIGGERING SWITCH LOGIC 1-6
TRIGGERING MODES 1-6
TRIGGER COUPLING 1-9
TRIGGER SOURCE 1-9
TRIGGER SLOPE 1-11
TRIGGER LEVEL 1-11
HORIZONTAL SWEEP RATES 1-11
TIME MEASUREMENT 1-11
SWEEP MAGNIFICATION 1-11
VARIABLE HOLD OFF 1-12
MAINFRAME OPERATING MODES 1-12
APPLICATIONS 1-12
TIME INTERVAL MEASUREMENTS 1-12
PERIOD AND FREQUENCY MEASUREMENTS 1-12
RISE-TIME AND FALL-TIME MEASUREMENTS 1-13
PULSE WIDTH MEASUREMENTS 1-14

SECTION 2—SPECIFICATION
STANDARD ACCESSORIES 2-4

WARNING

THE REMAINING PORTION OF THIS TABLE OF CONTENTS LISTS SERVICING INSTRUCTIONS. THESE SERVICING INSTRUCTIONS ARE FOR USE BY QUALIFIED PERSONNEL ONLY. TO AVOID ELECTRICAL SHOCK, DO NOT PERFORM ANY SERVICING OTHER THAN THAT CALLED OUT IN THE OPERATING INSTRUCTIONS UNLESS QUALIFIED TO DO SO.

SECTION 3—THEORY OF OPERATION
BLOCK DIAGRAM DESCRIPTION 3-1
TRIGGER GENERATOR 3-1
SWEEP GENERATOR 3-1
PICKOFF AMPLIFIER AND DELAY GATE GENERATOR 3-1
LOGIC 3-1
DIGITAL VOLTMETER 3-1
CLOCK GENERATOR 3-1

PAGE

DETAILED CIRCUIT DESCRIPTION 3-1
FRONT-PANEL DISTRIBUTION 3-3
TRIGGER GENERATOR 3-3
EXTERNAL SOURCE 3-3
INTERNAL AND LINE SOURCE 3-3
TRIGGER SOURCE SELECTOR AND AMPLIFIER 3-3
PEAK-TO-PEAK AUTO 3-3
SLOPE SELECTOR AND TRIGGER GENERATOR 3-5
GATE GENERATOR 3-5
LOGIC 3-5
SWEEP MODES 3-5
HOLD OFF TIMING 3-6
LOCKOUT BUFFER AMPLIFIER 3-7
HOLD OFF OUTPUT AMPLIFIER 3-7
SWEEP GENERATOR 3-7
TIMING CURRENT SOURCE 3-7
RAMP GENERATOR 3-10
HORIZONTAL PREAMPLIFIER 3-10
SWEEP GATE GENERATOR 3-10
DVM 3-10
DELAY TIME COMPARATOR AND DELAY GATE GENERATOR 3-10
DIGITAL VOLTMETER 3-11
DELAY COMPARISON VOLTAGE-TO-RAMP CONVERTER 3-12
COMPARATOR 3-12
REFERENCE CURRENT SOURCE 3-12
REFERENCE CURRENT INVERTER 3-12
COUNTER AND ENCODER 3-12
CLOCK GENERATOR 3-12
CONTROL LOGIC 3-13
OSCILLATOR 3-13
FIRST DIVIDER 3-15
X1-X10 MULTIPLEXER 3-15
DECADE DIVIDER 3-15
INTERNAL CLOCK MULTIPLEXER 3-15
OUTPUT CLOCK MULTIPLEXER 3-15
INTENSIFY CIRCUIT 3-15
7B87 IN A HORIZ PLUG-IN COMPARTMENT 3-16
INTERNAL BUTTON PRESSED 3-16
7B87 IN B HORIZ PLUG-IN COMPARTMENT 3-16
INTERNAL BUTTON PRESSED 3-16
TIME/DIVISION AND READOUT SWITCHING 3-17
BASIC READOUT SYSTEM 3-17
TIME/DIVISION READOUT 3-17
ACQUIRE-STOP DELAY TIME READOUT 3-17
INTERFACE CONNECTIONS AND POWER SUPPLY 3-17

SECTION 4—MAINTENANCE
PREVENTIVE MAINTENANCE 4-1
CLEANING 4-1
EXTERIOR 4-1
INTERIOR 4-1
SWITCH CONTACTS 4-1

TABLE OF CONTENTS (CONT)

PAGE

VISUAL INSPECTION 4-1
LUBRICATION 4-1
CAM SWITCH LUBRICATION 4-2
SEMICONDUCTOR CHECKS 4-2
ADJUSTMENT AFTER REPAIR 4-2
TROUBLESHOOTING 4-2
TROUBLESHOOTING AIDS 4-2
DIAGRAMS 4-2
VOLTAGES AND WAVEFORMS 4-2
CIRCUIT-BOARD ILLUSTRATIONS 4-2
SWITCH CAM IDENTIFICATION 4-4
DIODE COLOR CODE 4-4
WIRING COLOR CODE 4-4
SEMICONDUCTOR LEAD CONFIGURATIONS 4-4
INTER-BOARD PIN CONNECTOR IDENTIFICATION 4-4
MULTI-PIN CONNECTOR IDENTIFICATION 4-4
INTERFACE CONNECTOR PIN LOCATIONS 4-5
PERFORMANCE CHECK AND ADJUSTMENT 4-5
STATIC SENSITIVE DEVICES 4-5
TROUBLESHOOTING EQUIPMENT 4-6
TROUBLESHOOTING TECHNIQUES 4-6
TROUBLESHOOTING PROCEDURE 4-6
CORRECTIVE MAINTENANCE 4-8
OBTAINING REPLACEABLE PARTS 4-8
SOLDERING TECHNIQUES 4-9
COMPONENT REMOVAL AND REPLACEMENT 4-10
CIRCUIT BOARDS 4-10
SWITCHES 4-12
SEMICONDUCTORS 4-15
INTERCONNECTING PINS 4-15
CIRCUIT-BOARD PINS 4-15
FRONT-PANEL LIGHTS 4-16
ADJUSTMENT AFTER REPAIR 4-16
INSTRUMENT REPACKAGING 4-16

PAGE

SECTION 5—PERFORMANCE CHECK AND ADJUSTMENT
PRELIMINARY INFORMATION 5-1
ADJUSTMENT INTERVAL 5-1
TEKTRONIX FIELD SERVICE 5-1
USING THIS PROCEDURE 5-1
TEST EQUIPMENT REQUIRED 5-1
SPECIAL FIXTURES 5-1
TEST EQUIPMENT ALTERNATIVES 5-1
INDEX TO PERFORMANCE CHECK AND ADJUSTMENT PROCEDURE 5-4
PRELIMINARY PROCEDURE 5-4
A. TRIGGERING SYSTEM 5-5
B. HORIZONTAL/AQS SYSTEM 5-10

SECTION 6—INSTRUMENT OPTIONS

SECTION 7—REPLACEABLE ELECTRICAL PARTS

SECTION 8—DIAGRAMS AND CIRCUIT BOARD ILLUSTRATIONS

SECTION 9—REPLACEABLE MECHANICAL PARTS

CHANGE INFORMATION

LIST OF ILLUSTRATIONS

FIG. NO.		PAGE
Frontis-piece	7B87 Features	viii
1-1	Location of release latch	1-1
1-2	Front-panel controls, connectors, and indicators	1-2
1-3	Single Sweep Acquisition	1-5
1-4	Effect of LEVEL control and SLOPE switch on crt display	1-10
1-5	Area of graticule used for most accurate time measurements	1-11
1-6	Operation of sweep magnifier	1-12
1-7	Measuring the period and determining the frequency of a displayed waveform	1-13
1-8	Measuring the rise time and fall time of a displayed waveform	1-14
1-9	Measuring the pulse width of a displayed waveform	1-14
2-1	7B87 dimensional drawing	2-5
3-1	Basic block diagram of the 7B87 Delaying Time Base Unit	3-2
3-2	Detailed block diagram of Trigger Generator	3-4
3-3	Timing diagram for Gate Generator stage (Q92, Q96, Q98)	3-6
3-4	Detailed block diagram of Logic circuit	3-7
3-5	Detailed block diagram of Sweep Generator	3-8
3-6	Timing of events that form the Delay Gate signal	3-11
4-1	Lubrication procedure for a typical cam switch	4-2
4-2	Semiconductor lead configuration	4-3
4-3	Inter-board multi-pin connector assembly	4-4
4-4	End-lead multi-pin connector assembly	4-4
4-5	Location of pin numbers on Interface connector	4-5
4-6	7B87 troubleshooting chart	4-7
4-7	Readout board removal procedure	4-10
4-8	Coaxial end-lead connector assembly	4-11
4-9	Location of securing screws and inter-board multi-pin connectors on clock circuit board	4-12
4-10	Cam switch removal procedure	4-13
4-11	Removal procedure for typical pushbutton switch	4-14
4-12	Exploded view of circuit-board pin and ferrule	4-16
4-13	Front-panel light socket assembly	4-16

The illustrations in Section 8 are located near their associated diagrams on the foldout pages.

8-1	Semiconductor Lead Configurations.
8-2	Locations of circuit boards in the 7B87.
8-3	A2-Trigger circuit board assembly.
8-4	A1-Interface circuit board assembly.
8-5	A1-Interface circuit board assembly.
8-6	A1-Interface circuit board assembly.
8-7	A4-Clock circuit board assembly.
8-8	A4-Clock circuit board assembly.
8-9	A3-Readout circuit board assembly.
8-10	A1-Interface circuit board assembly.
8-11	Test Point and Adjustment Locations.

LIST OF TABLES

TABLE NO.		PAGE
1-1	TIME/DIV Setting Relationship To 7B87 Internal Acquire Clock Rep Rate	1-7
2-1	Electrical Characteristics	2-1
2-2	Mainframe Horizontal Compatibility	2-3
2-3	Environmental Characteristics	2-4
2-4	Physical Characteristics	2-4
3-1	Truth Table, TIME/DIV Setting vs. Strobes for U637 and U638	3-13
3-2	Selected Inputs or X1 and X10 Multiplexers	3-14
3-3	Operation of Output Multiplexer U655	3-15
3-4	Current in CH1 Readout Line vs. Acquire Clock Mode, During TS10	3-16
3-5	Readout Character Selection	3-18
4-1	Relative Susceptibility	4-5
5-1	Test Equipment	5-2
5-2	Acquire Clock Repetition Rate Output	5-11
5-3	Delay Time Linearity	5-12
5-4	Acquire-Stop Delay Accuracy	5-13
5-5	Sweep Timing	5-14
5-6	Magnified Sweep Timing	5-15

OPERATORS SAFETY SUMMARY

The general safety information in this part of the summary is for both operating and servicing personnel. Specific warnings and cautions will be found throughout the manual where they apply, but may not appear in this summary.

TERMS

IN THIS MANUAL

CAUTION statements identify conditions or practices that could result in damage to the equipment or other property.

WARNING statements identify conditions or practices that could result in personal injury or loss of life.

AS MARKED ON EQUIPMENT

CAUTION indicates a personal injury hazard not immediately accessible as one reads the marking, or a hazard to property including the equipment itself.

DANGER indicates a personal injury hazard immediately accessible as one reads the marking.

SYMBOLS

IN THIS MANUAL

Static-Sensitive Devces.

This symbol indicates where applicable cautionary or other information is to be found.

AS MARKED ON EQUIPMENT

DANGER—High voltage.

Protective ground (earth) terminal.

ATTENTION—refer to manual.

WARNINGS

POWER SOURCE

This product is intended to operate in a mainframe connected to a power source that will not apply more than 250 volts rms between the supply conductors or between either supply conductor and ground. A protective ground connection by way of the grounding conductor in the mainframe power cord is essential for safe operation.

GROUNDING THE PRODUCT

This product is grounded through the grounding conductor of the mainframe power cord. To avoid electrical shock, plug the mainframe power cord into a properly wired receptacle before connecting to the product input or output terminals. A protective ground connection by way of the grounding conductor in the mainframe power cord is essential for safe operation.

DANGER ARISING FROM LOSS OF GROUND

Upon loss of the protective-ground connection, all accessible conductive parts (including knobs and controls that may appear to be insulating), can render an electric shock.

DO NOT OPERATE IN EXPLOSIVE ATMOSPHERES

To avoid explosion, do not operate this product in an atmosphere of explosive gases unless it has been specifically certified for such operation.

DO NOT OPERATE PLUG-IN UNIT WITHOUT COVERS

To avoid personal injury, do not operate this product without covers or panels installed. Do not apply power to the plug-in unit via a plug-in extender.

SERVICING SAFETY SUMMARY

FOR QUALIFIED SERVICE PERSONNEL ONLY

Refer also to the preceding Operators Safety Summary

DO NOT SERVICE ALONE

Do not perform internal service or adjustment of this product unless another person capable of rendering first aid and resuscitation is present.

USE CARE WHEN SERVICING WITH POWER ON

Dangerous voltages exist at several points in this product. To avoid personal injury, do not touch exposed connections and components while power is on.

Disconnect power before removing protective panels, soldering, or replacing components.

POWER SOURCE

This product is intended to operate in a mainframe connected to a power source that will not apply more than 250 volts rms between the supply conductors or between either supply conductor and ground. A protective ground connection by way of the grounding conductor in the mainframe power cord is essential for safe operation.

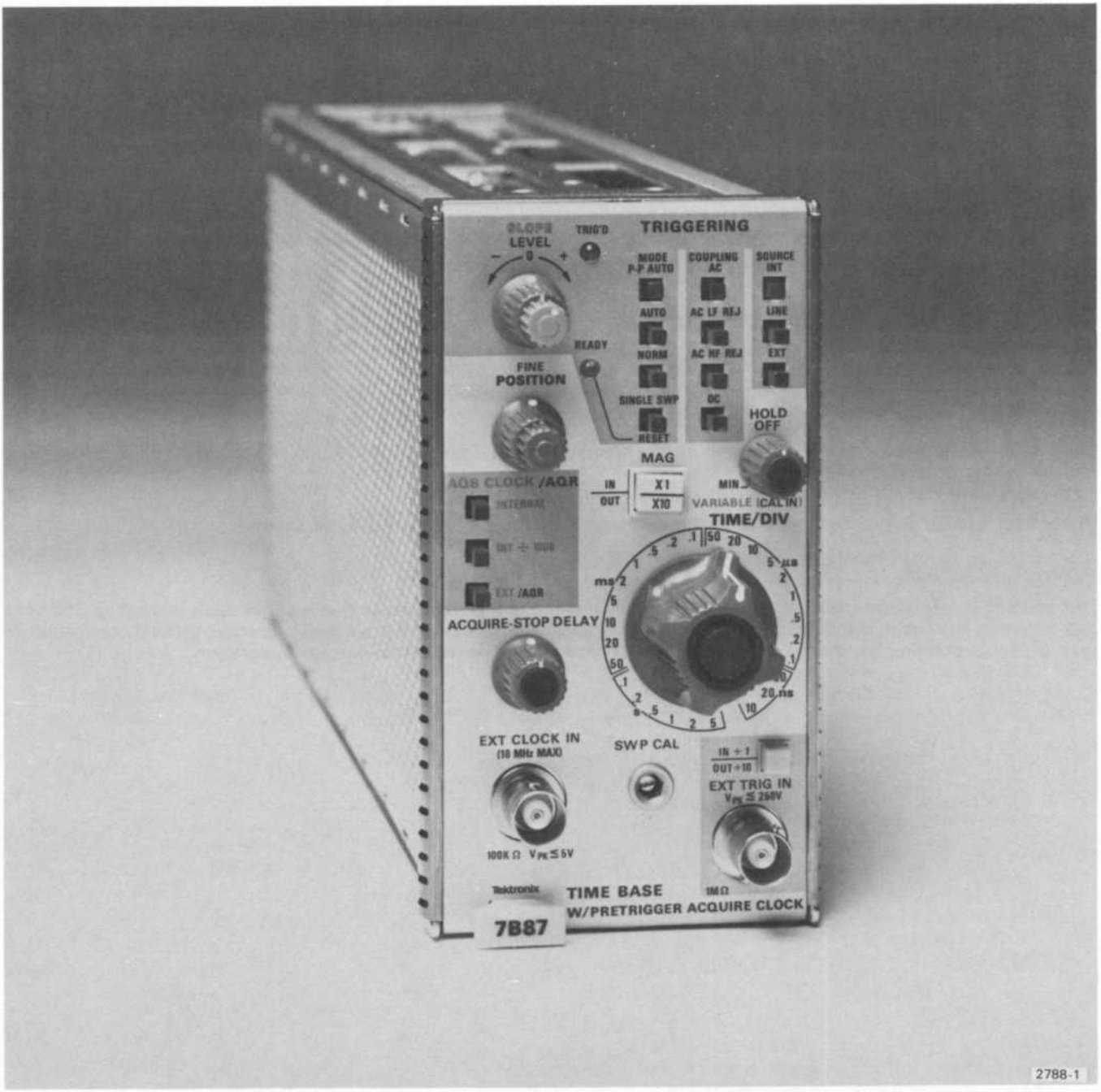

7B87 FEATURES

The 7B87 Time-Base unit Pretrigger Acquire Clock provides calibrated sweep rates from 5 seconds to 10 nanoseconds and triggering to 400 megahertz for 7000-Series Oscilloscopes. A X10 Magnifier increases each sweep rate by a factor of 10 and a VARIABLE TIME/DIV control provides continuously-variable sweep rates between calibrated steps. Variable holdoff and alphanumeric readout are provided. Also, when operating in the AUTO TRIGGERING MODE, a bright baseline trace is displayed in the absence of a trigger signal. The 7B87 can be operated as an independent time base or as a delayed-sweep unit with a companion delaying time-base unit. Sweep mode is determined by the companion delaying time base.

The 7B87 also features an internally-generated clock and an external clock input for sequential single sweep acquisition when operating in a 7000-series digitizing oscilloscope. The frequency range of the internally generated clock is 20.48 mHz (millihertz) to 20.48 MHz as determined by the TIME/DIV, X10 MAG, and INT ÷ 1000 switches. Also, an ACQUIRE-STOP DELAY function varies delay pickoff, and therefore pretrigger time, in compatible digitizing plug-in oscilloscopes. The portion of the oscilloscope real-time display between the triggering event and the end of delay time is intensified. The exact delay time is displayed on the crt readout.

OPERATING INSTRUCTIONS

The 7B87 Time-Base unit operates with a Tektronix 7700-, 7800-, or 7900-series oscilloscope mainframe and a 7A-series amplifier unit to form a complete oscilloscope system. This section describes the operation of the front-panel controls and connectors, provides general operating information, a functional check procedure, and basic applications for this instrument.

INSTALLATION

The time-base unit operates in the horizontal plug-in compartment of the mainframe. When used for single sweep acquisition with a Tektronix 7000-series digitizing oscilloscope (7854) the 7B87 must be installed in the B horizontal compartment of the mainframe. This instrument can also be installed in a vertical plug-in compartment to provide a vertical sweep on the crt. However, when used in this manner, there are no internal triggering or retrace blanking provisions, and the unit may not meet the specifications given in Section 2, Specification.

To install the unit in a plug-in compartment, push it in until it fits firmly into the compartment. The front panel of the unit should be flush with the front panel of the mainframe. Even though the gain of the mainframe is standardized, the sweep calibration of the unit should be checked when installed. The procedure for checking the unit is given under Sweep Functions in the Functional Check procedure in this section.

To remove the unit, first turn the power off, then pull the release latch (see Fig. 1-1) to disengage the unit from the mainframe, and pull it out of the plug-in compartment.

CONTROLS, CONNECTORS, AND INDICATORS

All controls, connectors, and indicators required for the operation of the time-base unit are located on the front panel. Figure 1-2 shows and provides a brief description of all front-panel controls, connectors, and indicators. More detailed information is given in the General Operating Instructions.

FUNCTIONAL CHECK

The following procedures are provided for checking basic instrument functions. Refer to the description of the controls, connectors, and indicators while performing this procedure. If performing the functional check procedure reveals a malfunction or possible improper adjustment, first check the operation of the associated plug-in units, then refer to the instruction manual for maintenance and adjustment procedures.

SETUP PROCEDURE

1. Install the time-base unit in the A horizontal compartment of the mainframe.

2. Install an amplifier plug-in unit in a vertical compartment.

3. Set the time-base unit controls as follows:

SLOPE ..... (+)
MODE ..... P-P AUTO
COUPLING ..... AC
SOURCE ..... INT
POSITION ..... Midrange
TIME/DIV ..... 1 ms
VARIABLE (CAL IN) ..... Calibrated (Pushed in)
HOLD OFF .....MIN (fully counterclockwise)
MAG ..... X1 (pushed in)

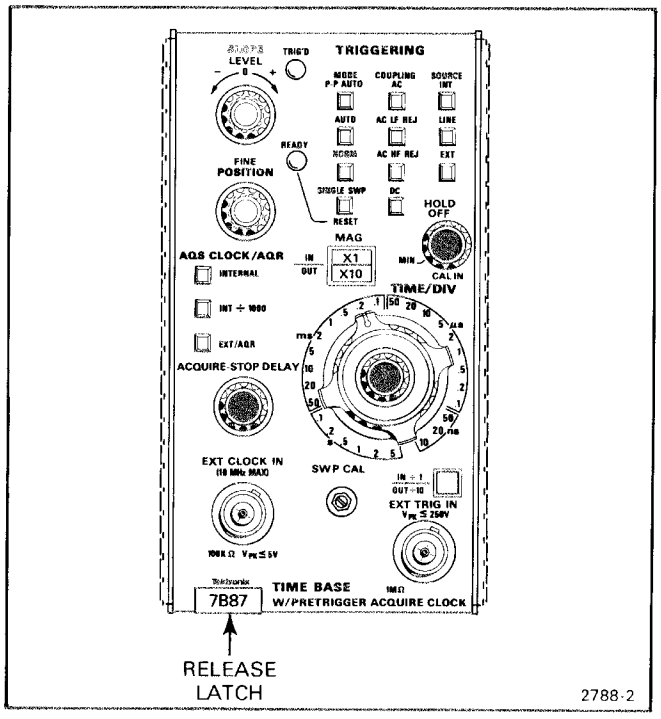

Figure 1-1. Location of release latch.

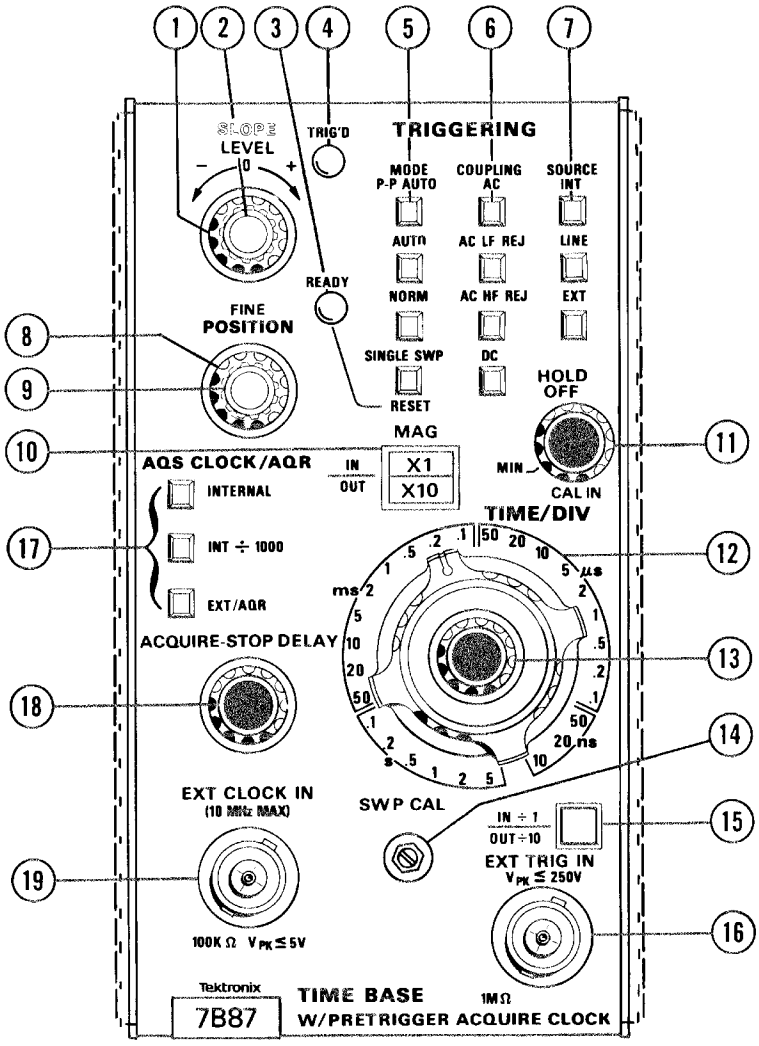

Figure 1-2. Front-panel controls, connectors, and indicators.

TRIGGERING

(1) **LEVEL Control**—Selects a point on the trigger signal where triggering occurs.

(2) **SLOPE Switch**—Permits sweep to be triggered on negative- or positive-going portions of the trigger signal.

(3) **READY Indicator**—Illuminates when sweep circuit is armed (SINGLE SWEEP Mode).

(4) **TRIG'D Indicator**—Illuminates when the display is triggered.

(5) **MODE Pushbuttons**—Selects the operating mode of the triggering circuit.

(6) **COUPLING Pushbuttons**—Selects the method of coupling the trigger signal to triggering circuit.

(7) **SOURCE**—Selects source of the trigger signal.

SWEEP

(8) **POSITION Control**—Provides horizontal positioning.

(9) **FINE Control**—Provides precise horizontal positioning.

(10) **MAG Pushbutton**—Selects magnified X10 or unmagnified sweep.

(11) **HOLD OFF Control**—Permits hold off period to be varied to improve trigger stability on repetitive, complex waveforms.

(12) **TIME/DIV Selector**—Selects the sweep rate of the sweep generator.

(13) **VARIABLE Control and CAL Switch**—Selects calibrated or uncalibrated sweep rates. Uncalibrated sweep rates can be continuously reduced to at least the sweep rate of the next slower position.

(14) **SWP CAL Adjustment**—Compensates for basic timing changes due to the differences in sensitivity of mainframes.

EXTERNAL TRIGGER INPUT

(15) **EXT TRIG ATTENUATOR**—Selects attenuation factor for external trigger signals.

(16) **EXT TRIG IN Connector**—Connector (BNC type) provides input for external trigger signals.

PRETRIGGER ACQUIRE CLOCK

(17) **AQS (acquire single-shot) CLOCK/AQR (acquire repetitive)**—Selects the source of clock pulses from the 7B87 to the 7854 digitizing plug-in oscilloscope (7B87 must be installed in B horizontal compartment of companion oscilloscope mainframe).

(18) **ACQUIRE-STOP DELAY Control**—A variable delay gate function that allows pretrigger time to be varied in compatible 7000-series digitizing oscilloscopes. Exact delay time is displayed on oscilloscope crt readout.

(19) **EXT CLOCK IN Connector**—Provides input for external TTL clock signals.

2788 38

Figure 1-2 (cont). Front-panel controls, connectors, and indicators.

4. Turn on the mainframe and allow at least 20 minutes warmup.

5. Set the mainframe vertical and horizontal modes to display the plug-in units used and adjust the intensity and focus for a well-defined display. See the oscilloscope mainframe and amplifier unit instruction manuals for detailed operating instructions.

SWEEP FUNCTIONS

NORMAL SWEEP. Perform the following procedure to obtain a normal sweep and to demonstrate the function of the related controls:

1. Perform the preceding Setup Procedure.

2. Connect a 0.4-volt, 1-kilohertz signal from the mainframe calibrator to the amplifier unit input.

3. Set the amplifier unit deflection factor for 4 divisions of display.

4. Adjust the LEVEL control for a stable display.

5. Turn the POSITION control and note that the trace moves horizontally.

6. Turn the FINE control and note that the display can be precisely positioned horizontally.

7. Check the display for one complete cycle per division. If necessary, adjust the front-panel SWP CAL screwdriver adjustment for one complete cycle per division over the center 8 graticule divisions. Be sure that the timing of the mainframe calibrator signal is accurate to within 0.25% (+20° to +30° C).

8. Press to release the VARIABLE (CAL IN) control. Turn the VARIABLE (CAL IN) control fully counterclockwise and note that the displayed sweep rate changes to at least the next slower TIME/DIV switch setting (i.e., 2 milliseconds/division). Press the VARIABLE (CAL IN) knob in (to the calibrated position).

MAGNIFIED SWEEP. Perform the following procedure to obtain a X10 magnified display and to demonstrate the function of the related controls:

1. Obtain a one cycle per division display as described in the preceding Normal Sweep procedure.

2. Press to release the MAG button (X10). Note that the unmagnified display within the center division of the graticule is magnified to about 10 divisions.

3. Press the MAG button (X1).

TRIGGERING FUNCTIONS

Perform the following procedure to obtain a triggered sweep and to demonstrate the functions of the related controls:

1. Obtain a display as described in the preceding Normal Sweep procedure.

2. Press the AUTO MODE button and turn the LEVEL control fully counterclockwise to obtain a free-running sweep.

3. Slowly turn the HOLD OFF control clockwise and note that a stable display can be obtained at several positions of the HOLD OFF control. Return the HOLD OFF control to the fully counterclockwise (MIN) position.

NOTE

The HOLD OFF control varies the sweep hold-off time which effectively changes the repetition-rate of the horizontal sweep signal. However, its primary function is to obtain a stable display of complex waveforms which are otherwise difficult to trigger.

4. Press the AC, AC HF REJ, and DC COUPLING buttons for both the + and − positions of the SLOPE switch and check for a stable display (LEVEL control may be adjusted, if necessary, to obtain a stable display).

5. Apply the 0.4-volt, 1-kilohertz signal from the mainframe calibrator to the amplifier unit and to the EXT TRIG IN connector.

6. Press the EXT SOURCE button and set the amplifier unit deflection factor for a 4-division display.

7. Press the AC, AC HF REJ, and DC COUPLING buttons for both the + and − positions of the SLOPE switch and check for a stable display (LEVEL control may be adjusted, if necessary, for a stable display).

8. Press the AC COUPLING, INT SOURCE, and NORM MODE buttons. Adjust the LEVEL control for a stable display.

9. Press the AUTO MODE button and adjust the LEVEL control for a free-running display.

10. Press the NORM MODE button and check for no display.

11. Adjust the LEVEL control for a stable display and press the SINGLE SWP MODE button.

12. Note that one trace occurs when the RESET MODE button is pressed.

13. Disconnect the mainframe calibrator signal from the amplifier unit input and press the RESET MODE button. Check for no display and note that the READY indicator is lit.

14. Note that one trace occurs and that the READY indicator extinguishes when the mainframe calibrator signal is reconnected to the amplifier unit input.

PRETRIGGER ACQUIRE CLOCK FUNCTIONS

NOTE

The following procedure must be performed with the 7B87 installed in the B horizontal compartment of a Tektronix 7854 Oscilloscope.

1. Install the 7B87 in the 7854 Oscilloscope B horizontal compartment and install an amplifier unit in the mainframe left vertical compartment. Turn on oscilloscope power. See Tektronix 7854 Oscilloscope Operators Manual for detailed operating information.

2. Set the time-base unit controls as follows:

SLOPE ..... (+)
MODE ..... AUTO
COUPLING ..... AC
SOURCE ..... INT
POSITION ..... Midrange
TIME/DIV ..... 1 ms
VARIABLE ..... Calibrated (CAL IN)
HOLDOFF ..... MIN (fully counterclockwise)
MAG ..... X1 (pushed in)
AQS CLOCK/AQR ..... INTERNAL
ACQUIRE STOP DELAY ..... Midrange

3. Set the 7854 vertical and horizontal modes to display the plug-in units and set WFM ACQUISITION to SCOPE. Set the intensity and focus for a well-defined, intensified display.

4. Connect the 0.4-volt, 1-kilohertz signal from the mainframe calibrator to the amplifier unit input.

5. Set the amplifier unit deflection factor for 4 divisions of display.

6. Set the TRIGGERING MODE to NORM and adjust the LEVEL control for a stable display (TRIG'D light on).

7. Rotate the ACQUIRE-STOP DELAY control fully counterclockwise. Notice that delay-time readout (located in the lower right-hand corner of the crt) is near 0.2 ms. (Zero delay time means that the acquired signal occurred prior to the triggering event.)

8. Rotate the ACQUIRE-STOP DELAY control until the delay-time readout is approximately 4 ms. Notice that the first four divisions of squarewave display are intensified. The 4 ms intensified display relates to four divisions of post-trigger in the subsequent single-sweep display. Therefore, the remaining 6 divisions in the subsequent display would be pre-trigger (see Fig. 1-3).

NOTE

Four divisions of intensified display at 1 ms/div relates to delay-time readout of approximately 4 ms.

9. Set the amplifier unit input coupling switch to off or ground. Set the 7B87 to SINGLE SWEEP MODE and press the RESET pushbutton so that READY light is on.

10. Set the 7854 to Stored CRT Display and then to Acquire Single-Shot Waveform Acquisition (AQS).

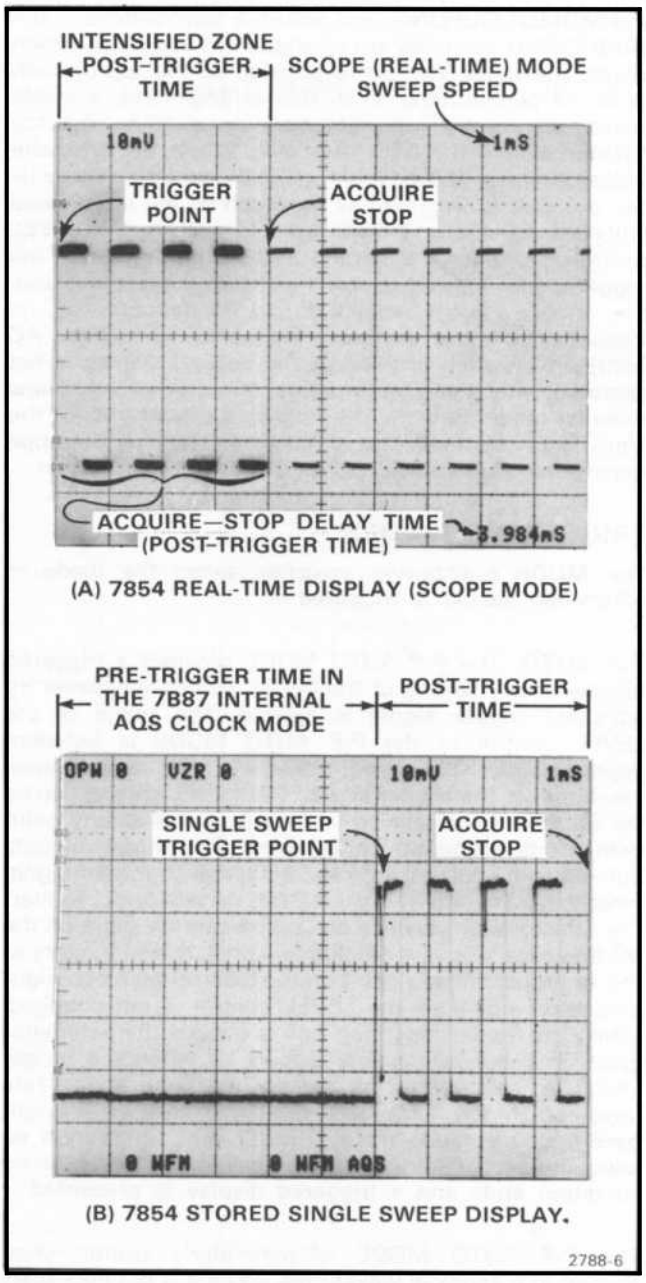

Figure 1-3. Single Sweep Acquisition.

11. To trigger the single-sweep display, set the amplifier unit input coupling to dc. Triggering occurs when the amplifier coupling switch is set to dc. The first six milliseconds of the display is pretrigger. (Noise in the Stored Single Sweep may be displayed at the Single Sweep Trigger Point as a result of the coupling switch contact closure.)

GENERAL OPERATING INFORMATION

TRIGGERING SWITCH LOGIC

The MODE, COUPLING, and SOURCE pushbuttons of the TRIGGERING switches are arranged in a sequence which places the most-often used position at the top of each series of pushbuttons. With this arrangement, a stable display can usually be obtained by pressing the top pushbuttons: P-P AUTO, AC, INT. When an adequate trigger signal is applied and the LEVEL control is correctly set, the unit is triggered as indicated by the illuminated TRIG'D light. If the TRIG'D light is not on, the LEVEL control is either at a setting outside the range of the trigger signal applied to this unit from the vertical unit, the trigger signal amplitude is inadequate, or its frequency is below the lower frequency limit of the AC COUPLING switch position. If the desired display is not obtained with these buttons pushed in, other selections must be made. Refer to the following discussions or the instruction manuals for the associated oscilloscope mainframe and vertical unit(s) for more information.

TRIGGERING MODES

The MODE pushbutton switches select the mode in which the sweep is triggered.

P-P AUTO. The P-P AUTO MODE provides a triggered display at any setting of the LEVEL control whenever an adequate trigger signal is applied. The range of the LEVEL control in the P-P AUTO MODE is between approximately 10% and 90% of the peak-to-peak amplitude of the trigger signal. The LEVEL control can be set so that the displayed waveform starts at any point within this range on either slope. The trigger circuits automatically compensate for a change in trigger signal amplitude. Therefore, if the LEVEL control is set to start the waveform display at a certain percentage point on the leading edge of a low-amplitude signal, it also triggers at the same percentage point on the leading edge of a high-amplitude signal, if the LEVEL control is not changed. When the trigger repetition rate is outside the parameter given in the Specification section, or when the trigger signal is inadequate, the sweep free runs at the rate indicated by the TIME/DIV switch to produce a bright base-line, reference trace (TRIG'D light off). When an adequate trigger signal is again applied, the free-running condition ends and a triggered display is presented.

The P-P AUTO MODE is particularly useful when observing a series of waveforms, since it is not necessary to reset the LEVEL control for each observation. The P-P AUTO MODE is used for most applications because of the ease of obtaining a triggered display. The AUTO, NORM, and SINGLE-SWP MODE settings may be used for special applications.

AUTO. The AUTO MODE provides a triggered display with the correct setting of the LEVEL control whenever an adequate trigger signal is applied (see Trigger Level discussions). The TRIG'D light indicates when the display is triggered.

When the trigger repetition rate is outside the frequency range selected by the COUPLING switch or the trigger signal is inadequate, the sweep free runs at the rate indicated by the TIME/DIV switch (TRIG'D indicator off). An adequate trigger signal ends the free-running condition and a triggered display is presented. The sweep also free runs at the rate indicated by the TIME/DIV switch when the LEVEL control is at a setting outside the amplitude range of the trigger signal. This type of free-running display is useful when it is desired to measure only the peak-to-peak amplitude of a signal without observing the waveshape (such as bandwidth measurements).

NORMAL. The NORM MODE provides a triggered display with the correct setting of the LEVEL control whenever an adequate trigger signal is applied. The TRIG'D light indicates when the display is triggered.

The normal trigger mode must be used to produce triggered displays with trigger repetition rates below about 30 hertz. When the TRIG'D light is off, no trace is displayed.

SINGLE-SWEEP OPERATION. The 7B87 single-sweep function can be used with both digitizing and non-digitizing oscilloscopes. A discussion of each follows:

Non-Digitizing Oscilloscope Single Sweep. When the signal to be displayed is not repetitive or varies in amplitude, waveshape, or repetition rate, a conventional repetitive type display may produce an unstable presentation. Under these circumstances, a stable display can often be obtained by using the single-sweep feature of this unit. The single-sweep mode is useful to photgraph non-repetitive or unstable displays.

To obtain a single-sweep display of a repetitive signal, first obtain the best possible display in the NORM MODE. Then, without changing the other TRIGGERING controls, press the SINGLE SWP RESET button. A single trace is presented each time this button is pressed. Further sweeps cannot be presented until the SINGLE SWP RESET button is pressed again. If the display signal is a complex waveform composed of varying amplitude pulses, successive single-sweep displays may not start at the same point on the waveform. To avoid confusion due to the crt persistance, allow the display to disappear before pressing the SINGLE SWP RESET button again. At fast sweep rates, it may be difficult to view the single-sweep display. The apparent trace intensity can be increased by reducing the ambient light level or by using a viewing hood as recommended in the mainframe instruction manual.

When using the single-sweep mode to photograph waveforms, the graticule may have to be photographed separately in the normal manner to prevent over exposing the film. Be sure the camera system is well protected against stray light, or operate the system in a darkened room. For repetitive waveforms, press the SINGLE SWP RESET button only once for each waveform unless the signal is completely symmetrical. Otherwise, multiple waveforms may appear on the film. For random signals, the camera shutter can be left open until the signal triggers the unit. Further information on photographic techniques is given in the appropriate camera instruction manual.

Single-Sweep Acquisition Using a 7854 Oscilloscope. The ACQUIRE-STOP DELAY control and AQS CLOCK switches function only with the 7B87 installed in the 7854 Oscilloscope B Horiz compartment. The 7854 requires a sequential clock signal to acquire a single-sweep display: this is provided by the 7B87 time-base unit with the AQS CLOCK/AQR clock switch in the INTERNAL or INT ÷ 1000 positions or externally through the EXT CLOCK IN, when in the EXT/AQR position.

Table 1-1 shows the internal clock frequencies at different TIME/DIV switch settings, at X10 MAG settings and at the INTERNAL and INT ÷ 1000 settings of the AQS CLOCK/AQR switches.

The AQS CLOCK/AQR switches select three clock operating modes:

1. INTERNAL—The clock is generated internally, with the clock frequency determined by the TIME/DIV and MAG settings (see Table 1-1).

The ACQUIRE-STOP DELAY control varies the allocation of pretrigger and post-trigger time in the subsequent stored single-sweep display. The post-trigger portion is intensified in the real-time display and the exact time is displayed by CRT readout (see Fig. 1-3).

NOTE

Occasionally, when using the 7B87/7854, the first point of single-shot acquired (AQS) waveform will be displayed at the end of the trace (extreme right) and will appear that the waveform has made a transition on the last point. To determine if the last point is erroneous, check that the first and last points have nearly the same vertical value at any setting of the 7B87 ACQUIRE-STOP DELAY control.

2. INT ÷ 1000—In this AQS CLOCK mode the internal clock frequency is divided by 1,000 (see Table 1-1). The real-time display is the same as the internal mode with the intensified zone and associated ACQUIRE-STOP DELAY readout corresponding to post-trigger time in the subsequent stored single-sweep display.

TABLE 1-1
TIME/DIV Setting Relationship To 7B87 Internal Acquire Clock Rep Rate

TIME/DIV	MAG		X1 ÷ 1000	X10 ÷ 1000
	X1	X10		
5 s	20.48 Hz	204.8 Hz	.02048 Hz	.2048 Hz
2 s	51.2 Hz	512 Hz	.0512 Hz	.512 Hz
1 s	102.4 Hz	1024 Hz	.1024 Hz	1.024 Hz
.5 s	204.8 Hz	2.048 kHz	.2048 Hz	2.048 Hz
.2 s	512 Hz	5.12 kHz	.512 Hz	5.12 Hz
.1 s	1.024 kHz	10.24 kHz	1.024 Hz	10.24 Hz
50 ms	2.048 kHz	20.48 kHz	2.048 Hz	20.48 Hz
20 ms	5.12 kHz	51.2 kHz	5.12 Hz	51.2 Hz
10 ms	10.24 kHz	102.4 kHz	10.24 Hz	102.4 Hz
5 ms	20.48 kHz	204.8 kHz	20.48 Hz	204.8 Hz
2 ms	51.2 kHz	512 kHz	51.2 Hz	512 Hz
1 ms	102.4 kHz	1.024 MHz	102.4 Hz	1.024 kHz
.5 ms	204.8 kHz	2.048 MHz	204.8 Hz	2.048 kHz
.2 ms	512 kHz	5.12 MHz	512 Hz	5.12 kHz
.1 ms	1.024 MHz	10.24 MHz	1.024 kHz	10.24 kHz
50 μS	2.048 MHz	20.48 MHz	2.048 kHz	20.48 kHz
20 μS	5.12 MHz		5.12 kHz	
10 μS	10.24 MHz		10.24 kHz	

The AQS stored single-sweep display is effectively 1000 times slower than the real-time display; however, the ACQUIRE-STOP DELAY time (post-trigger time) remains unchanged and becomes insignificant compared to the digitized sweep. Therefore, the stored single-sweep display is for practical purposes all pretrigger.

NOTE

During single-shot acquisition with an external clock input the 7854 may not necessarily sample one data point for each clock pulse, as shown below:

P/W (Points/ Waveform)	Clock Pulses Required
1024	1
512	2
256	4
128	8

3. EXT/AQR (EXT CLOCK IN)—This mode connects the external TTL compatible clock signal, applied to the front-panel EXT CLOCK IN connector, to the companion digitizing oscilloscope mainframe (7854).

The real-time display is the same as the internal mode with the intensified zone and associated ACQUIRE-STOP DELAY readout corresponding to post-trigger time in the subsequent stored single-sweep display. When the AQS (acquire single-shot) display is stored, the ACQUIRE-STOP DELAY time is as displayed on the readout but the effective TIME/DIV of the display changes at a rate determined by the frequency of the external clock signal. The resulting TIME/DIV for the stored single-sweep display acquired in the external clock mode can be determined by the following formula:

$$\text{EXT TIME/DIV} = 102.4 \times \text{External Clock Period}$$

or

$$102.4 \times \frac{1}{\text{EXT CLOCK FREQUENCY}}$$

NOTE

The 7854 may not return from the acquire single-shot (AQS) mode if the acquire-stop occurs before the memory is filled once. This is most noticeable at slow sweep speeds, especially in the internal ÷1000 clock mode. When the 7854 AQS button is pressed, the 7854 begins to sample the waveform and fill the memory. The acquire-stop signal occurs at a set interval after the 7B87 is triggered; this interval is the acquire-stop delay time. If the acquire-stop is generated before the 7854 has filled the memory once (one digital sweep) the 7854 will not recognize it, and the system will keep on digitizing.

When the 7854 is used for non-single-sweep acquisition (AQR), the 7B87 clock should be disabled by selecting the EXT/AQR pushbutton and removing any connection from the EXT CLOCK IN connector. This prevents the 7B87 clock signal from interfering with the 7854 acquisition mode.

To obtain a stored single-sweep display of a repetitive signal with a 7854 digitizing oscilloscope, first obtain a real-time display (7854 set to Scope CRT Display Mode) in the NORM TRIGGERING MODE. Then select the portion of pretrigger and post-trigger desired for the subsequent stored single-sweep display with the ACQUIRE-STOP DELAY control. The displayed intensified zone relates to the portion of the single-sweep displayed after the single-sweep trigger event (post-trigger) and the non-intensified zone relates to the portion of single-sweep displayed before the single-sweep trigger event

occurs (pretrigger—see Fig. 1-3). The exact amount of the post-trigger display is indicated by the CRT readout. Then, without changing other triggering controls, select the single-sweep mode by pressing the SINGLE SWP RESET pushbutton. Set the 7854 to the Stored CRT Display mode and to the AQS (acquire single-shot) WFM Acquisition mode. When the AQS button is presed, the 7854 will respond by lighting the "Busy" LED and blanking the entire screen. Arm the single-sweep function by pressing the SINGLE SWP RESET pushbutton again. After the trigger event occurs, the stored waveform will be displayed on screen. A single stored trace is displayed each time the 7854 AQS function is selected and the 7B87 SINGLE SWP RESET pushbutton is pressed.

If an Error message is displayed at the bottom of the CRT, the 7B87 clock is running faster than the 7854 can digitize, and the single sweep will not be acquired. To remedy this error condition, select a slower TIME/DIV setting and re-acquire the single-sweep display until the Error message disappears and the single-sweep display is stored. If the 7854 does not return from the "Busy" state or if it is desired to abort the AQS before the trigger event has occurred, press Stop Ext Acquire button on the 7854 rear panel.

TRIGGER COUPLING

The TRIGGERING COUPLING pushbuttons select the method in which the trigger signal is connected to the trigger circuits. Each position permits selection or rejection of some frequency components of the signal which triggers the sweep.

AC. AC COUPLING blocks the dc component of the trigger signal. Signals with low-frequency components below about 30 hertz are attenuated. In general, AC COUPLING can be used for most applications. However, if the signal contains unwanted frequency components or if the sweep is to be triggered at a low repetition rate or a dc level, one of the other COUPLING switch positions will provide a better display.

AC LF REJ. AC LF REJ COUPLING rejects dc, and attenuates low-frequency trigger signals below about 30 kilohertz. Therefore, the sweep is triggered only by the higher-frequency components of the trigger signal. This position is particularly useful for providing stable triggering if the trigger signal contains line-frequency components. Also, the AC LF REJ position provides the best alternate-mode vertical displays at fast sweep rates when comparing two or more unrelated signals.

AC HF REJ. AC HF REJ COUPLING passes all low-frequency signals between about 30 hertz and 50 kilohertz. Dc is rejected and signals outside the above range are attenuated. When triggering from complex waveforms, this position is useful to provide a stable display of the low-frequency components.

DC. DC COUPLING can be used to provide stable triggering from low-frequency signals which would be attenuated in other COUPLING switch positions. DC COUPLING can be used to trigger the sweep when the trigger signal reaches a dc level set by the LEVEL control. When using internal triggering, the setting of the vertical unit position control affects the triggering point.

TRIGGER SOURCE

The TRIGGERING SOURCE pushbuttons select the source of the trigger signal which is connected to the trigger circuits.

INTERNAL. The INT position causes the 7B87 to trigger on the trigger signal from the vertical plug-in unit. Further selection of the internal trigger signal may be provided by the vertical plug-in unit or by the mainframe; see the instruction manuals for these instruments for more information. For most applications, the internal source can be used. However, some applications require special triggering which cannot be obtained in the INT position. In such cases, the LINE or EXT positions of the SOURCE switches must be used.

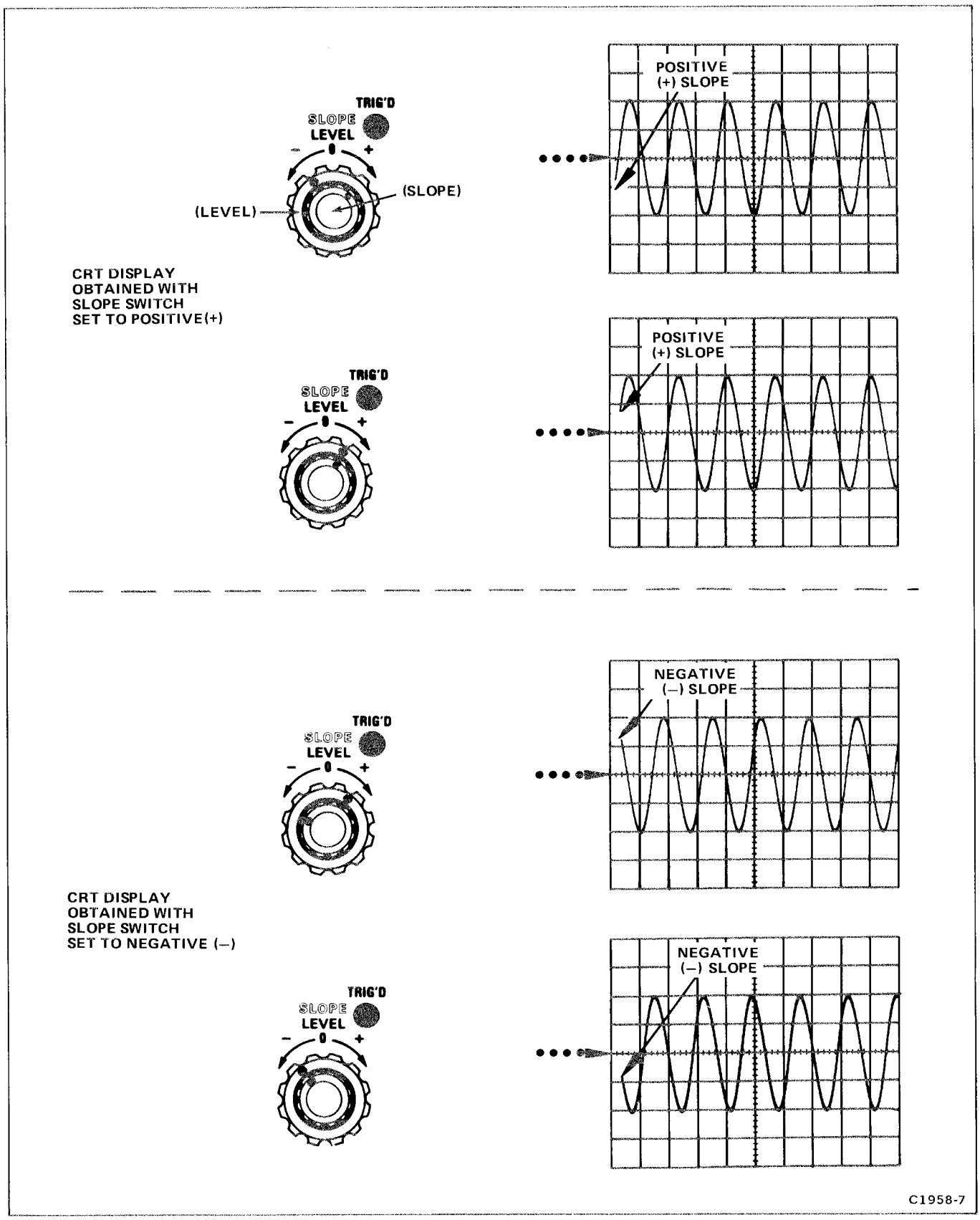

Figure 1-4. Effect of LEVEL control and SLOPE switch on crt display.

LINE. The LINE position connects a sample of the power-line voltage from the mainframe to the trigger circuit. Line triggering is useful when the input signal is time-related (multiple or submultiple) to the line frequency. It is also useful for providing a stable display of a line-frequency component in a complex waveform.

EXTERNAL. The EXT position connects the signal from the EXT TRIG IN connector to the trigger circuit. The external signal must be time-related to the displayed waveform for a stable display. An external trigger signal can be used to provide a triggered display when the internal signal is either too low in amplitude for correct triggering or contains signal components on which triggering is not desired. It is also useful when signal tracing in amplifiers, phase-shift networks, wave-shaping circuits, etc. The signal from a single point in the circuit can be connected to the EXT TRIG IN connector through a probe or cable. The sweep is then triggered by the same signal at all times and allows amplitude, time relationship, or waveshape changes of signals at various points in the circuit to be examined without resetting the TRIGGERING controls.

The ÷ 10 pushbutton attenuates the external trigger signal by a factor of 10. Attenuation of high-amplitude external trigger signals is desirable to increase the effective range of the LEVEL control.

TRIGGER SLOPE

The TRIGGERING SLOPE switch (concentric with the TRIGGERING LEVEL control) determines whether the trigger circuit responds on the positive- or negative-going portion of the trigger signal. When the SLOPE switch is in the (+) (positive-going) position, the display starts on the positive-going portion of the waveform (see Fig. 1-4). When several cycles of a signal appear in the display, the setting of the SLOPE switch is often unimportant. However, if only a certain portion of a cycle is to be displayed, correct setting of the SLOPE switch is necessary to provide a display that starts on the desired slope of the input signal.

TRIGGER LEVEL

The TRIGGERING LEVEL control determines the voltage level on the trigger signal at which the sweep is triggered. When the LEVEL control is set in the + region, the trigger circuit responds at a more positive point on the trigger signal. When the LEVEL control is set in the − region, the trigger circuit responds at a more negative point on the trigger signal. Figure 1-4 illustrates this effect with different settings of the SLOPE switch.

To set the LEVEL control, first select the TRIGGERING MODE, COUPLING, SOURCE, and SLOPE. Then set the LEVEL control fully counterclockwise and rotate it clockwise until the display starts at the desired point.

HORIZONTAL SWEEP RATES

The TIME/DIV switch provides calibrated sweep rates from 5 seconds/division to 10 nanoseconds/division in a 1-2-5 sequence. The VARIABLE TIME/DIV control must be in the calibrated position and the MAG switch set to X1 to obtain the sweep rate indicated by the TIME/DIV switch. However, the mainframe CRT readout will display the appropriate sweep rate.

The VARIABLE TIME/DIV control includes a two-position switch to determine if the sweep rate is calibrated, or uncalibrated. When the VARIABLE control is pressed in, it is inoperative and the sweep rate is calibrated. When pressed and released outward, the VARIABLE control is activated for uncalibrated sweep rates, to at least the sweep rate of the next slower position.

A calibrated sweep rate can be obtained in any position of the VARIABLE control by pressing the VARIABLE control. This feature is particularly useful when a specific uncalibrated sweep rate has been obtained and it is desired to switch between calibrated and uncalibrated displays.

TIME MEASUREMENT

When making time measurements from the graticule, the area between the second and tenth vertical lines of the graticule provides the most linear time measurements (see Fig. 1-5). Position the start of the timing area to the second vertical line and adjust the TIME/DIV switch so the end of the timing area falls between the second and tenth vertical lines.

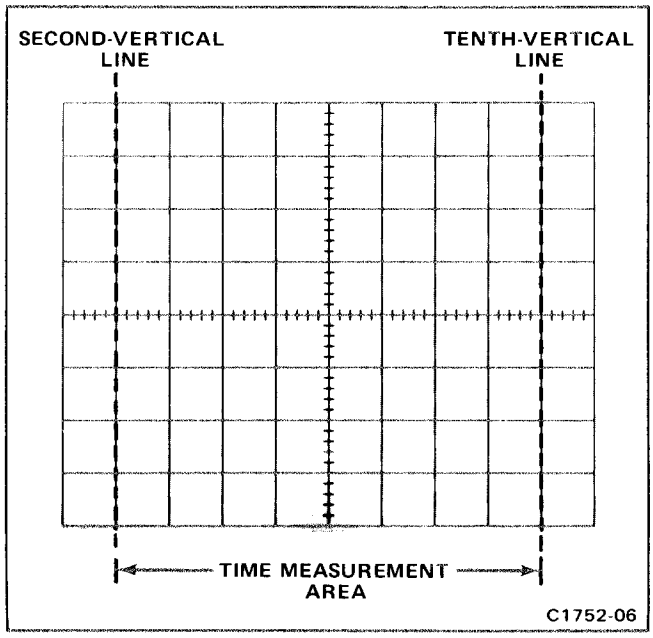

Figure 1-5. Area of graticule used for most accurate time measurements.

SWEEP MAGNIFICATION

The sweep magnifier can be used to expand the display by a factor of 10. The center division of the unmagnified display is the portion visible on the crt in the magnified form (see Fig. 1-6). The equivalent length of the

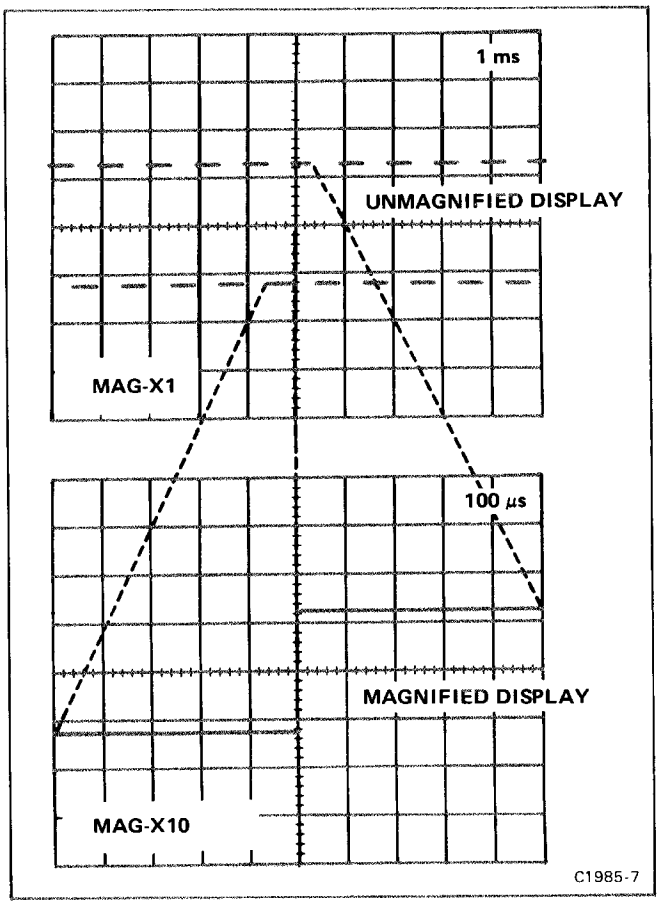

Figure 1-6. Operation of sweep magnifier.

magnified sweep is more than 100 divisions; any 10-division portion can be viewed by adjusting the POSITION and FINE POSITION controls to bring the desired portion into the viewing area.

When the MAG switch is set to X10 (OUT), the equivalent magnified sweep rate can be determined by dividing the TIME/DIV setting by 10; the equivalent magnified sweep rate is displayed on the crt readout.

VARIABLE HOLD OFF

The HOLD OFF control improves triggering stability on repetitive complex waveforms by effectively changing the repetition rate of the horizontal sweep signal. The HOLD OFF control should normally be set to its minimum setting. When a stable display cannot be obtained with the TRIGGERING LEVEL control, the HOLD OFF control can be varied for an improved display. If a stable display cannot be obtained at any setting of the LEVEL and HOLD OFF controls, check the TRIGGERING COUPLING and SOURCE switch settings.

MAINFRAME OPERATING MODES

The time-base unit can be operated either as an independent time base in any Tektronix 7700-, 7800-, or 7900-series oscilloscope mainframe, or as a delayed-sweep unit in those mainframes that have two horizontal compartments. A companion delaying time-base unit is required for delayed-sweep operation. Refer to the delaying time-base unit instruction manual for additional information.

APPLICATIONS

The following information describes procedures and techniques for making basic time measurements with the time-base unit installed in a Tektronix 7700-, 7800-, or 7900-series oscilloscope. These procedures provide enough detail to enable the operator to adapt them to other related time measurements. Contact your Tektronix Field Office or representative for assistance in making measurements that are not described in this manual.

TIME-INTERVAL MEASUREMENTS

Since the sweep rate and the horizontal distance (in divisions) that the sweep travels across the graticule in a calibrated-sweep oscilloscope system is a function of time, the time interval between any two points on a waveform can be accurately measured. The following procedures provide methods to measure some of the more common time-related definable characteristics of a waveform such as period, frequency, rise time, fall time, and pulse width. The procedure for each of these measurements is essentially the same, except for the points between which the measurements are made. The time interval between any two selected points on a displayed waveform can be measured with basically the same technique.

PERIOD AND FREQUENCY MEASUREMENTS

Perform the following procedure to measure the period and determine the frequency of a displayed waveform:

1. Install the time-base unit in a mainframe horizontal compartment (either A or B Horiz in a four-compartment mainframe).

2. Connect the signal to be measured to the vertical unit input.

3. Set the mainframe Horizontal and Vertical Mode switches to display the time base and vertical units. (Check that the time base VARIABLE (CAL IN) control is pushed in and the HOLD OFF control is in the MIN position.)

4. Set the TRIGGERING switches and LEVEL control for a stable display (see General Operating Information for selecting proper triggering).

5. Set the vertical deflection factor and position control for about a 5-division display, vertically centered on the graticule.

6. Set the TIME/DIV switch and POSITION control for 1 complete cycle displayed within the center 8 graticule divisions as shown in Figure 1-7.

7. Measure the horizontal distance in divisions over 1 complete cycle of the displayed waveform (see Fig. 1-7).

8. Multiply the horizontal distance measured in step 7 by the TIME/DIV switch setting. (Divide the answer by 10 if sweep magnification is used.)

Example: Assume that the horizontal distance over 1 complete cycle is 7 divisions, and the TIME/DIV switch setting is 0.1 ms (see Fig. 1-7).

Using the formula:

$$\text{Period} = \frac{\text{Horizontal distance (divisions)} \times \text{TIME/DIV setting}}{\text{Magnification}}$$

Substituting values:

$$\text{Period} = \frac{7 \times 0.1 \text{ ms}}{1} = 0.7 \text{ millisecond}$$

9. Determine the frequency of the displayed waveform obtained in steps 1 through 8 by taking the reciprocal of the period of 1 cycle.

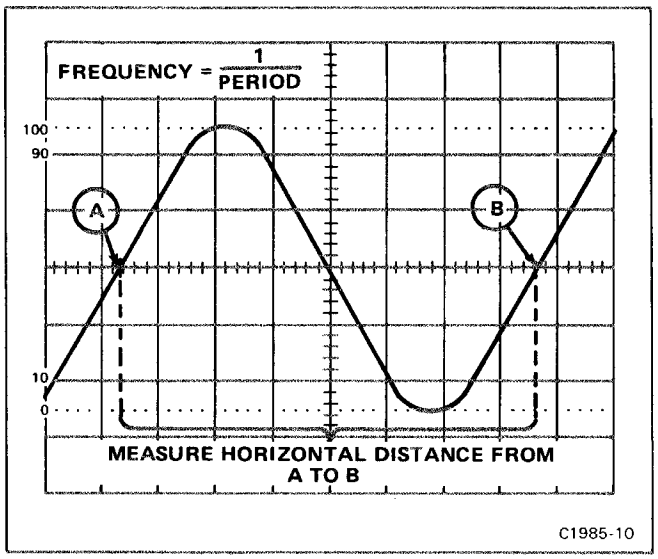

Figure 1-7. Measuring the period and determining the frequency of a displayed waveform.

Example: Assume that the period of the displayed waveform is 0.7 millisecond.

Using the formula:

$$\text{Frequency} = \frac{1}{\text{Period}}$$

Substituting values:

$$\text{Frequency} = \frac{1}{0.7 \text{ ms}} = 1.43 \text{ kilohertz}$$

RISE-TIME AND FALL-TIME MEASUREMENTS

Perform the following procedure to measure the rise time and fall time of a displayed waveform:

1. Install the time-base unit in a mainframe horizontal compartment (either A or B Horiz in a four-compartment mainframe).

2. Connect the signal to be measured to the vertical unit input.

3. Set the mainframe Horizontal and Vertical Mode switches to display the time base and the vertical unit. (Check that the time base VARIABLE (CAL IN) control is pushed in and the HOLD OFF control is in the MIN position.)

4. Set the TRIGGERING switches and LEVEL control for a stable display (see General Operating Information for selecting proper triggering).

5. Set the vertical deflection factor and position control for a vertically-centered display with an exact number of divisions of amplitude.

6. Set the TIME/DIV switch and POSITION control to display the rising or falling portion of the waveform within the center 8 graticule divisions as shown in Figure 1-8 (see General Operating Information in this section for discussion of timing measurment accuracy).

7. Determine rise time or fall time by measuring the horizontal distance in divisions between the point on the rising or falling portion of the waveform that is 10% and the point that is 90% of the total display amplitude (see Fig. 1-8).

NOTE

The left edge of the oscilloscope graticule is scribed with 0, 10, 90, and 100% lines for convenience when measuring rise time or fall time. To use this feature, adjust the vertical deflection factor and position control to fit the display between the 0 and 100% graticule lines. Then measure the horizontal distance between the points where the waveform crosses the 10% and 90% graticule lines.

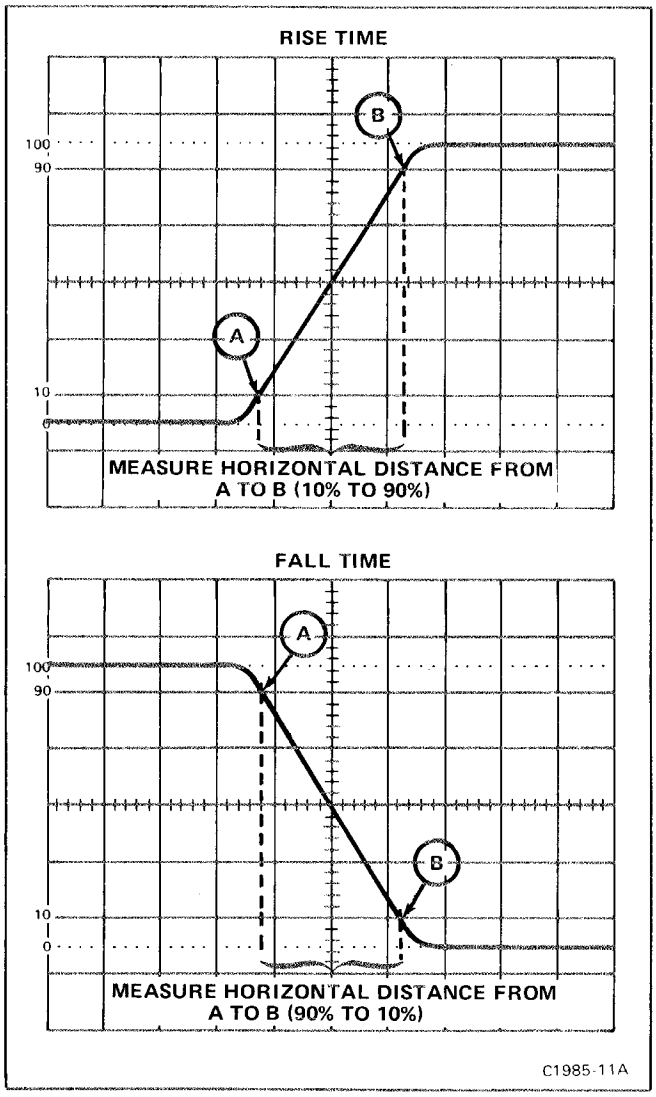

Figure 1-8. Measuring the rise time and fall time of a displayed waveform.

8. Multiply the horizontal distance measured in step 7 by the TIME/DIV switch setting. (Divide the answer by 10 if sweep magnification is used.)

Example: Assume that the horizontal distance from the 10 to 90% points is 2.5 divisions and the TIME/DIV switch setting is .1 μs (see Fig. 1-8).

Using the formula:

$$\text{Rise Time} = \frac{\text{Horizontal distance (divisions)} \times \text{TIME/DIV setting}}{\text{Magnification}}$$

Substituting values:

$$\text{Rise Time} = \frac{2.5 \times 0.1\ \mu\text{s}}{1} = 0.25 \text{ microsecond}$$

PULSE WIDTH MEASUREMENTS

Perform the following procedure to measure the pulse width of a displayed waveform:

1. Install the time-base unit in a mainframe horizontal compartment (either A or B Horiz in a four-compartment mainframe).

2. Connect the signal to be measured to the vertical unit input.

3. Set the mainframe horizontal- and vertical-mode switches to display the time base and vertical unit. (Check that the time base VARIABLE (CAL IN) control is pushed in and the HOLD OFF control is in the MIN position.)

4. Set the TRIGGERING switches and LEVEL control for a stable display (see General Operating Information for selecting proper triggering).

5. Set the vertical deflection factor and position control for about a 5-division pulse, vertically centered on the graticule.

6. Set the TIME/DIV switch and POSITION control for 1 complete pulse displayed within the center 8 graticule divisions as shown in Figure 1-9.

7. Measure the horizontal distance in divisions between the 50% amplitude points of the displayed pulse (see Fig. 1-9).

8. Multiply the horizontal distance measured in step 7 by the TIME/DIV switch setting. (Divide the answer by 10 if sweep magnification is used).

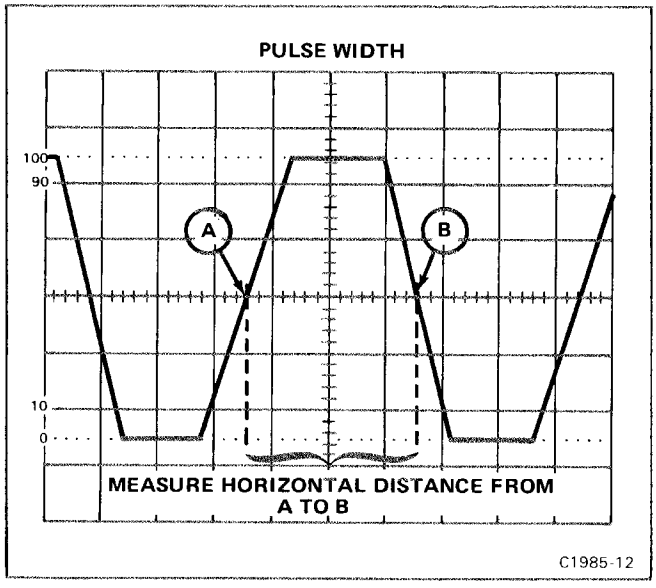

Figure 1-9. Measuring the pulse width of a displayed waveform.

Example: Assume that the horizontal distance between the 50% amplitude points is 3 divisions, and the TIME/DIV switch setting is 0.1 ms (see Fig. 1-9).

Using the formula:

$$\text{Pulse Width} = \frac{\text{Horizontal distance (divisions)} \times \text{TIME/DIV setting}}{\text{Magnification}}$$

Substituting values:

$$\text{Pulse Width} = \frac{3 \times 0.1 \text{ ms}}{1} = 0.3 \text{ millisecond}$$

SPECIFICATION

This instrument will meet the electrical characteristics listed in Table 2-1, following complete adjustment. The following electrical characteristics apply over an ambient temperature range of 0° to +50° C, except as otherwise indicated. Warmup time for given accuracy is 20 minutes.

TABLE 2-1
Electrical Characteristics

Characteristic	Performance Requirement			
SWEEP GENERATOR				
Sweep Rates				
Calibrated Range	5 s/div to 10 ns/div in 27 steps. X10 Magnifier extends fastest calibrated sweep rate to 1 ns/div.			
Variable Range	Continuously variable uncalibrated sweep rate to at least 2.5 times the calibrated sweep rate setting.			
Sweep Accuracy[1] (With 7700, 7800, or 7900-Series Mainframes)	With SWP CAL adjusted at 1 ms/div within the temperature range of +20° to +30° C to a timing reference of 0.25% or better.			
Over Center 8 Div	+15° to +35° C		0° to +50° C	
	Unmag	Mag	Unmag	Mag
5 s/Div to 1 s/Div	4.0%	5.0%	5.0%	6.0%
0.5 s/Div to 0.1 μs/Div	1.5%	2.5%	2.5%	3.5%
50 ns/Div to 10 ns/Div	2.5%	4.0%	3.5%	5.0%
Excluded Portions of Sweep				
Start of Sweep	First 10 ns in 7100, 7800, and 7900-series mainframes. First 20 ns in 7700-series mainframes. First 50 ns in all other 7000-series mainframes.			
End of Sweep	Beyond 10th div unmagnified. Beyond 100th div magnified.			
Sweep Length (Unmagnified)	At least 10.2 div at all sweep rates.			
MAG Registration	0.5 div or less from graticule center when changing from MAG X10 to MAG X1.			
Position Range				
POSITION Controls Fully Clockwise	Start of sweep must be to the right of graticule center at 1 ms/div.			
POSITION Controls Fully Counterclockwise	End of sweep must be to the left of graticule center at 1 ms/div.			

[1]The fastest calibrated sweep rate is limited by some mainframes.

TABLE 2-1 (CONT)
Electrical Characteristics

Characteristic	Performance Requirement
SWEEP GENERATOR (CONT)	
Trigger Holdoff Time	
Minimum Holdoff Setting	
5 s/Div to 1 μs/Div	2 times TIME/DIV setting or less.
0.5 μ/Div to 10 ns/Div	2.0 μs or less.
Variable Holdoff Range	Extends holdoff time through at least 2 sweep lengths for sweep rates of 20 ms/div or faster.

TRIGGERING

Triggering Sensitivity from Repetitive Signal (Auto, Norm and Single Sweep Modes)	Triggering Frequency Range[2]	Minimum Triggering Signal Required	
Coupling		Internal	External
AC	30 Hz to 50 MHz 50 MHz to 400 MHz	0.3 div 1.5 div	50 mV 250 mV
AC LF REJ[3]	30 kHz to 50 MHz 50 MHz to 400 MHz	0.3 div 1.5 div	50 mV 250 mV
AC HF REJ	30 Hz to 50 kHz	0.3 div	50 mV
DC[4]	Dc to 50 MHz 50 MHz to 400 MHz	0.3 div 1.5 div	50 mV 250 mV
Internal Trigger Jitter	0.1 ns or less at 400 MHz.		
External Trigger Input			
Maximum Input Voltage	250 V (dc plus peak ac).		
Input R and C	1 MΩ within 5%, 20 pF within 10%.		
Level Range (Excluding P-P AUTO)	(Checked on 1 kHz sine wave.)		
EXT ÷ 1	At least + and −1.5 volts.		
EXT ÷ 10	At least + and −15 volts.		

P-P AUTO Operation Sensitivity (AC or DC Coupling)	Triggering Frequency Range	Minimum Triggering Signal Required	
		Internal	External
	200 Hz to 50 MHz	0.5 div	125 mV
	50 MHz to 400 MHz	1.5 div	375 mV
Low Frequency Response	At least 50 Hz	2.0 div	500 mV

[2]The triggering frequency ranges given here are limited to the −3 dB frequency of the oscilloscope vertical system (mainframe and amplifier unit) when operating from an internal source.
[3]Will not trigger on sine waves at or below 60 Hz when amplitudes are less than 8 divisions internal or 3 volts external.
[4]The Triggering Frequency Range for DC COUPLING applies to frequencies above 30 Hz when operating in the AUTO TRIGGERING MODE.

TABLE 2-1 (CONT)
Electrical Characteristics

Characteristic	Performance Requirement
PRETRIGGER ACQUIRE CLOCK	
Internal Acquire (AQS) Clock Frequency	20.48 mHz (millihertz) to 20.48 MHz as determined by the TIME/DIV X10 MAG, and INT ÷ 1000 switches.
Accuracy (INTERNAL and INT ÷ 1000)	0.1%.
Range	
INTERNAL (X1 MAG)	18 steps in a 1-2-5 sequence from 20.48 Hz to 10.24 MHz.
INTERNAL (X10 MAG)	X10 magnifier increases frequency by a factor of 10 to a maximum of 20.48 MHz (16 steps to 50 μs/Div setting).
INT ÷ 1000 (X1 MAG)	18 steps in a 1-2-5 sequence from 20.48 mHz (millihertz) to 10.24 kHz.
INT ÷ 1000 (X10 MAG)	X10 magnifier increases frequency by a factor of 10 to a maximum of 20.48 kHz (16 steps to 50 μs/Div setting).
External Clock Input (EXT/AQR)	Front-panel bnc connector.
Maximum Input Voltage	5 V pk.
Input Characteristic	100 kΩ within 5%.
Threshold Voltage	TTL compatible.
Maximum Input Frequency	10 MHz.
BNC to Interface Delay	0.5 μs or less.
Acquire Stop Delay	
Range	0.2 or less to at least 9.9 times TIME/DIV setting.
Jitter (5 s/div to 10 μs/div)	0.02% of TIME/DIV setting or less.
Delay Accuracy (+15° C to +35° C)	
0.5 s/Div to 10 μs/Div	Within 0.5% of measurement plus 5% of TIME/DIV setting.

TABLE 2-2
Mainframe Horizontal Compatibility

Mainframe	Operating Conditions	Symptom	Cause
7844	When the B Horizontal compartment is displayed by both Beam 1 and Beam 2, a 7B87 in the A Horizontal compartment will terminate the B sweep display at the end of the A sweep.	The B sweep display may be shortened or disappear as determined by the 7B87 ACQUIRE-STOP DELAY control.	7000-Series Mainframes with four plug-in compartments have interface connection A16 HI in the A Horizontal compartment and A16 LO in the B Horizontal compartment. In the 7844, the state of A16 is switchable as determined by the selection of Beam 1 or Beam 2 display.
7844 Option 21		Fully Compatible.	

TABLE 2-3
Environmental Characteristics

Refer to the Specification section of the associated mainframe manual.

TABLE 2-4
Physical Characteristics

Characteristic	Information
Net Weight	Approximately 2.6 pounds (1.2 kilogram).
Dimensions	See Figure 2-1, dimensional drawing.

STANDARD ACCESSORIES

1 ea ..... Instruction Manual

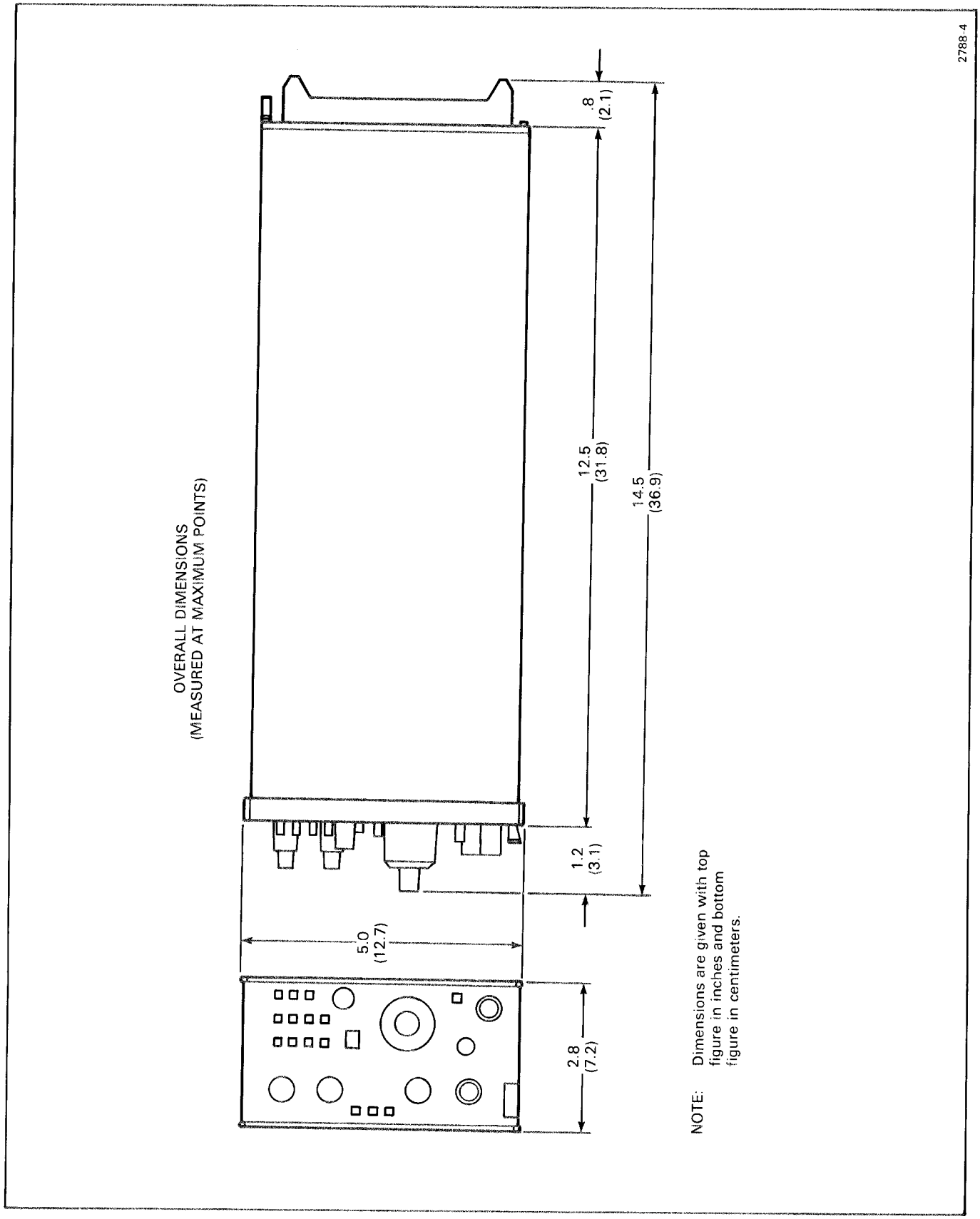

Figure 2-1. 7B87 dimensional drawing.

WARNING

THE FOLLOWING SERVICING INSTRUCTIONS ARE FOR USE BY QUALIFIED PERSONNEL ONLY. TO AVOID PERSONAL INJURY, DO NOT PERFORM ANY SERVICING OTHER THAN THAT CONTAINED IN OPERATING INSTRUCTIONS UNLESS YOU ARE QUALIFIED TO DO SO. REFER TO OPERATORS SAFETY SUMMARY AND SERVICE SAFETY SUMMARY PRIOR TO PERFORMING ANY SERVICE.

THEORY OF OPERATION

This section of the manual describes the circuitry used in the 7B87 Time-Base. The description begins with a discussion of the instrument, using the block diagram shown in Figure 3-1. Next, each circuit is described in detail with a block diagram provided to show the major interconnections between circuits, and the relationship of the front-panel controls to each circuit. Detailed schematic diagrams of each circuit are located in the diagrams foldout section at the back of this manual. Refer to these diagrams throughout the following discussions for specific electrical values and relationships.

BLOCK DIAGRAM DESCRIPTION

The following discussion is provided to aid in understanding the overall concept of the 7B87 before the individual circuits are discussed in detail. A basic block diagram is shown in Figure 3-1. The numbered diamond in each block refers to the corresponding circuit diagram at the rear of this manual.

TRIGGER GENERATOR

The Trigger Generator provides a stable crt display by starting each sweep at the same point on the waveform. Circuitry is included for selection of trigger-mode, coupling, and source. The output of the Trigger Generator is a fast-rise gate which enables the Sweep Generator.

SWEEP GENERATOR

The sweep sawtooth signal is initiated when the Trigger Generator output is applied to the Sweep Generator. The rate of change (slope) of the sawtooth signal is determined by the TIME/DIV switch setting. The sawtooth signal provides horizontal deflection for the mainframe (oscilloscope) and is used by the Pickoff Amplifier and the Delay Gate Generator in the 7B87. The Sweep Generator also generates a Sweep Gate pulse which unblanks the mainframe crt.

PICKOFF AMPLIFIER AND DELAY GATE GENERATOR

The Pickoff Amplifier and Delay Gate Generator circuits produce a delay gate when the sawtooth signal from the sweep generator reaches the level set by the ACQUIRE-STOP DELAY control. The ACQUIRE-STOP DELAY control determines where the intensified zone ends. The Delay Gate signal enables the companion delayed time-base unit.

LOGIC

The Logic circuit determines the acquire mode (acquire single-shot, AQS; or acquire repetitive, AQR) of the 7B87. The 7B87 can operate independently or as a delayed time base. The Logic circuit also determines the trigger mode and generates the holdoff signal for the mainframe

DIGITAL VOLTMETER

The Digital Voltmeter circuit converts the delay comparison voltage, from the ACQUIRE-STOP DELAY control, to a calibrated delay time readout on the crt. The readout indicates the time between the start of the sweep and the end of the intensified zone.

CLOCK GENERATOR

The Clock Generator produces three signals for the mainframe: (1) the Clock pulse, (2) the channel 1 Row Data for the 7854 mainframe, and (3) the Aux Z-Axis signal which intensifies the display.

DETAILED CIRCUIT DESCRIPTION

The operation of circuits unique to this instrument is described in detail in this discussion. Circuits commonly used in the electronics industry are not described in detail.

The following circuit analysis, with supporting illustrations, names the individual stages and shows how they are connected to form major circuits. These illustrations show the inputs and outputs for each circuit and the relationship of the front-panel controls to the individual stages. The detailed circuit diagrams from which the illustrations are derived are shown in the Diagrams section.

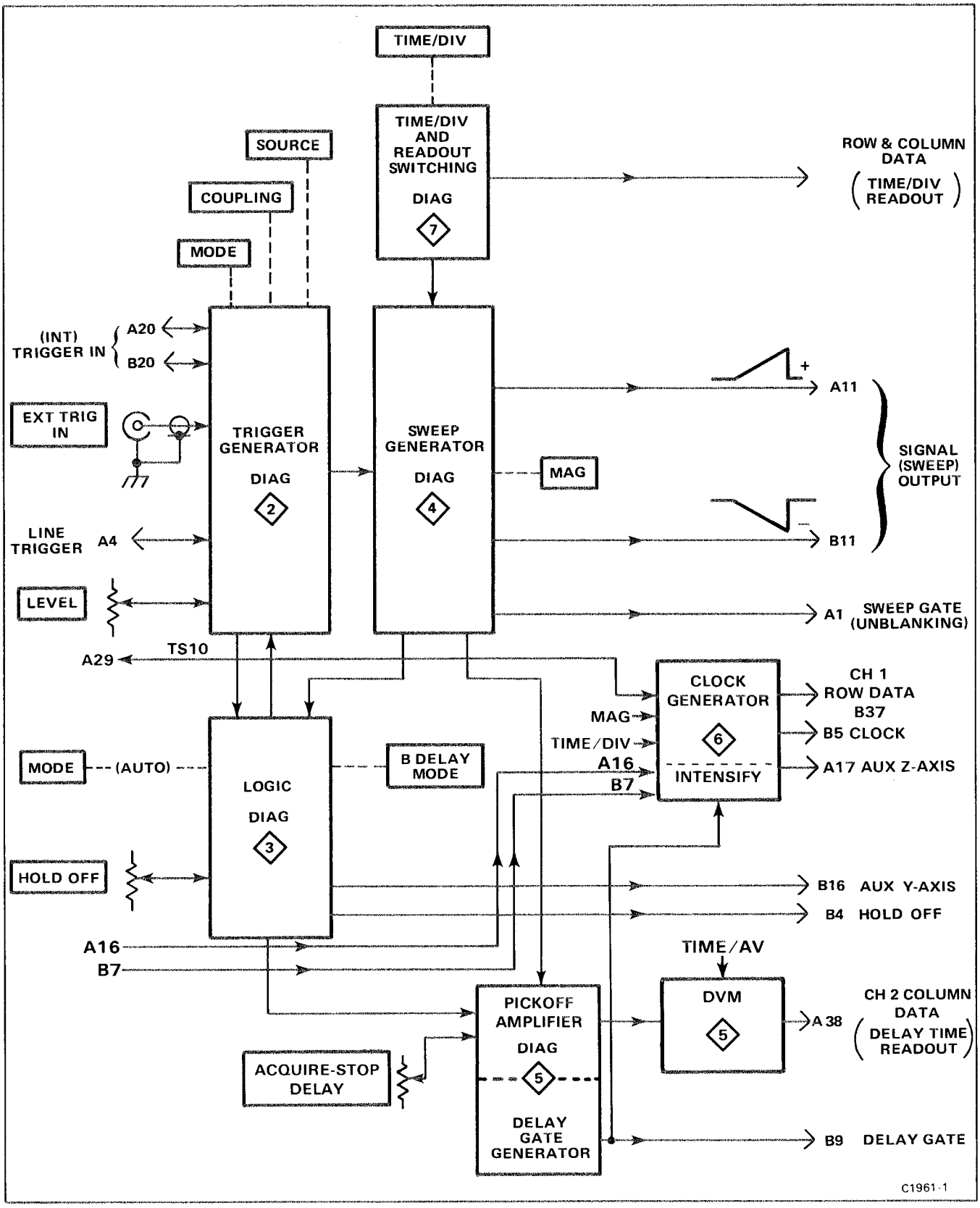

Figure 3-1. Basic block diagram of the 7B87 Delaying Time Base Unit.

1 FRONT-PANEL DISTRIBUTION

The Front-Panel Distribution diagram shows the interconnections between front-panel functions (controls, connectors, and indicators) and circuit boards in the 7B87.

2 TRIGGER GENERATOR

The Trigger Generator provides a stable display by starting the Sweep Generator (diagram 4) at a selected point on the input waveform. The triggering point can be varied by the LEVEL control and may occur on either the positive or negative slope of the waveform. The triggering signal source may come from the signal being displayed (INT), and external source (EXT), or a sample of the power-line voltage (LINE). Figure 3-2 is a block diagram of the Trigger Generator.

EXTERNAL SOURCE

The external trigger signal is connected to the Trigger Generator through EXT TRIG IN connector J2. When released, push-button switch S10 provides 10 times attenuation of the external trigger input signal.

When SOURCE switch (S50) is set to EXT and the COUPLING control set to AC, external signals below approximately 16 kilohertz are coupled through R15, C15 and R20 to Q22. Triggering signals above 16 kilohertz are coupled through C20 to the gate of Q22A.

Field-effect transistors Q22A and Q22B form a unity-gain source follower, which couples the external trigger signal to the Trigger Source Selector and Amplifier stage (U65 pin 4). Diodes CR23 and CR24 protect the input by clamping it within a diode drop of ground (approximately 0.7 volt).

INTERNAL AND LINE SOURCE

The internal trigger signal from the vertical channel(s) of the mainframe is connected to the Internal Trigger Amplifier stage (U35) differentially via interface connector pins A20 and B20.

Internal trigger signals with frequencies above 16 kilohertz are coupled through C37 directly into the Trigger Source Selector and Amplifier stage (U65 pin 8). Internal trigger signals with frequencies below 16 kilohertz are coupled differentially through R31 and R33 to U35 pins 2 and 3. The single-ended output at U35 pin 6 is coupled, along with the offset from LEVEL control R60, to U65 pin 10. Ac coupling is provided by C43.

A sample of the line voltage is connected to the trigger circuits via interface connector pin A4. The line signal connects to the Trigger Source Selector and Amplifier stage at U65 pin 2.

TRIGGER SOURCE SELECTOR AND AMPLIFIER

The Trigger Source Selector and Amplifier stage (partial U65) selects the triggering signal source from the signal being displayed (INT), an external source (EXT), or a sample of the power line voltage (LINE).

The trigger source is selected by SOURCE switch S50. The voltage offset from LEVEL control R60 is coupled to U65 pin 10. The differential trigger output signal from U65 pins 16 and 17 is coupled to the Slope Selector and Trigger Generator stage (U85).

High-frequency reject coupling is provided in the Trigger Source Selector stage. When the AC HF REJ push button is pressed, R68, C68 and components internal to U65 pin 9 form a high-frequency rejection filter. Only low-frequency ac triggering signals are accepted.

PEAK-TO-PEAK AUTO

The Peak-to-Peak Auto function can be divided into 3 distinct blocks. First, the Peak Detector determines signal size and dc positioning. Second, a DC Centering loop centers the peak-detected output regardless of the dc input and off-set voltages. Third, the Peak-to-Peak Level Range output voltage is automatically adjusted until the trigger output reaches the clamp level set by the Automatic Gain Control to achieve full level range (refer to the Specification section in this manual for level range parameters).

Peak Detector

The peak detector outputs from U65 pins 14 and 15, rectified within U65, are externally filtered by C73 and C74. Secondary stages of peak detection for the positive and negative detector signals are provided by U75A-CR71-C72 and U75B-CR75-C76. Outputs from the Peak Detector stage are coupled to the Peak-to-Peak Level Range and DC Centering stages.

DC Centering

Operational amplifier U55B adjusts the input level at U65 pin 10 to null the dc input voltage and accumulated dc offsets. This allows the trigger outputs at U65 pins 16 and 17 to balance when LEVEL control R60 is set to zero. DC Balance adjustment R85 provides centering for offset voltages due to U85.

Peak-to-Peak Level Range

The Peak-to Peak Level Range stage amplifies the peak Detector signals to provide constant-amplitude trigger signals and to establish the range of the front-panel LEVEL control. Peak Detector signal amplitude depends on triggering (input) signal amplitude.

Peak Detector signals from R58-R59 are coupled to U55A pin 3 of the Peak-to-Peak Level Range stage. The gain of

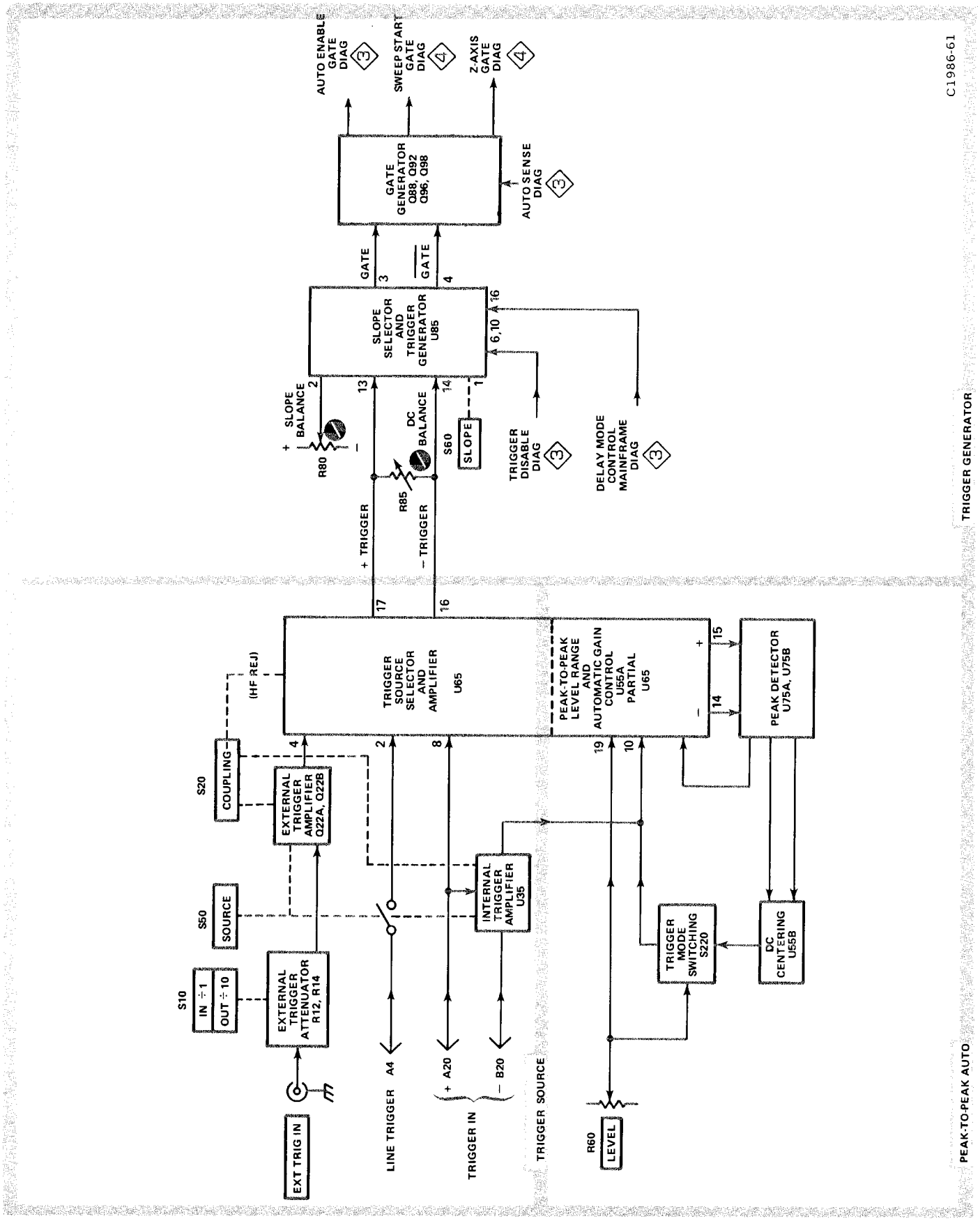

Figure 3-2. Detailed block diagram of Trigger Generator.

the feedback amplifier (consisting of U55A and pins 1 and 20 of U65) increases as the Peak Detector signal amplitude is reduced, thereby producing a constant trigger signal level at U65 pins 16 and 17.

The range of the front-panel LEVEL control is zero at minimum triggering signal amplitude. The LEVEL range increases as triggering signal amplitude increases, until it reaches maximum level range at the Automatic Gain Control threshold. Refer to the Specification section in this manual for triggering sensitivity and triggering LEVEL range parameters.

Automatic Gain Control

The Automatic Gain Control stage limits the trigger signal amplitude to approximately 450 millivolts peak-to-peak (at U65 pins 16 and 17) regardless of the trigger input signal amplitude. The level of the peak-detected signal from R58-59 is sensed by a feedback amplifier stage (U55A and pins 1 and 20 of U65). When the peak detected signal is above the Automatic Gain Control threshold (resulting from approximately 2 divisions of internal trigger signal or approximately 50 millivolts of external trigger signal), the Automatic Gain Control stage limits the output trigger signal amplitude at U65 pins 16 and 17. Current into U65 pin 3 (established by R51) determines the current reference that sets the Automatic Gain Control threshold.

SLOPE SELECTOR AND TRIGGER GENERATOR

Integrated circuit U85 converts the differential trigger signal from the Trigger Source Selector and Amplifier block to a differential gate waveform for use by the Gate Generator stage.

SLOPE switch S60 is connected to U85 pin 1 to determine whether the trigger occurs on the positive- or negative-going slope. When the SLOPE switch is set to +, a positive going signal on pin 13 produces a positive-going gate on pin 3 and a negative-going gate on pin 4. When the SLOPE switch is set to −, a negative-going signal on pin 13 produces a positive-going gate on pin 3 and a negative-going gate on pin 4. Slope Balance adjustment R80 provides optimum input balance for both + and − SLOPE operation.

The Delay Mode In signal (to U85 pin 16) functions only when the unit is operating as a delayed sweep in the B Horizontal compartment of a mainframe with 2 horizontal compartments. When the unit is operating in the "independent" or "triggerable after delay" modes (as determined by the delaying sweep time-base unit in the A horizontal compartment), there is no effect on the Trigger Generator circuits. However, when the unit is operating in the "B starts after delay" mode, a high level at U85 pin 16 supplies a trigger gate pulse to U85 pins 3 and 4 in the absence of a trigger disable pulse at the emitter of Q242.

At the end of each sweep, the Logic circuits (diagram 3) supply a trigger disable pulse through Q242 to U85 pins 6 and 10. A high level disables the Trigger Generator to allow enough time for the sweep generator to stabilize before another trigger pulse starts the next sweep.

GATE GENERATOR

The Gate Generator stage provides an auto enable gate and Z-axis gate (unblanking) to the Sweep Generator circuit (diagram 4). Figure 3-3 shows the timing of the Gate Generator Functions.

When an adequate trigger signal is applied to U85 pins 13 and 14, it produces high and low levels, respectively, at its pin 3 and pin 4 outputs.

The high level from U85 pin 3 is coupled through emitter follower Q88 and J200-2 into the Logic circuit (diagram 3) to indicate that a triggering signal has been received. The Logic circuit (diagram 3) sets the Auto Sense line at J200-3 high, turning off Q98. Simultaneously, the low level at U85 pin 4 gates comparator Q96-Q92. The collector of Q92 rises high to provide a Sweep Start Gate at J200-5 and the collector of Q96 falls low to provide a Z-Axis Gate (unblanking) at J200-4.

In the absence of a trigger output at U85 pins 13 and 14, pin 3 is set low and pin 4 is set high. The low level from U85 pin 3 is coupled through J200-2 to the Logic circuit (diagram 3) to indicate the lack of a triggering signal. The Logic circuit provides a low-level Auto Sense pulse through J200-3 to the base of Q98. The low level gates the comparator (Q98 and Q96). The collector of Q98 of Q96 falls low to provide a Z-Axis Gate (unblanking) at J200-4.

LOGIC

The Logic circuit controls the sweep modes and associated functions of the time-base unit (e.g., sweep display, hold off, auto sweep, single sweep, etc.). The Logic circuit also generates control signals for the mainframe. Figure 3-4 is a block diagram for the Logic circuit.

SWEEP MODES

Integrated circuit U220 controls the Norm, Auto, and Single Sweep Modes and also generates control signals. P-P Auto operation is described in the Trigger Generator circuit description (diagram 2).

Normal Mode

The Norm Mode is provided when U220 pin 12 is low. In the Norm Mode, only an appropriate trigger signal can initiate a sweep gate to the Sweep Generator (diagram 4). Sweep Control integrated circuit U220 controls sweep lockout and hold-off functions.

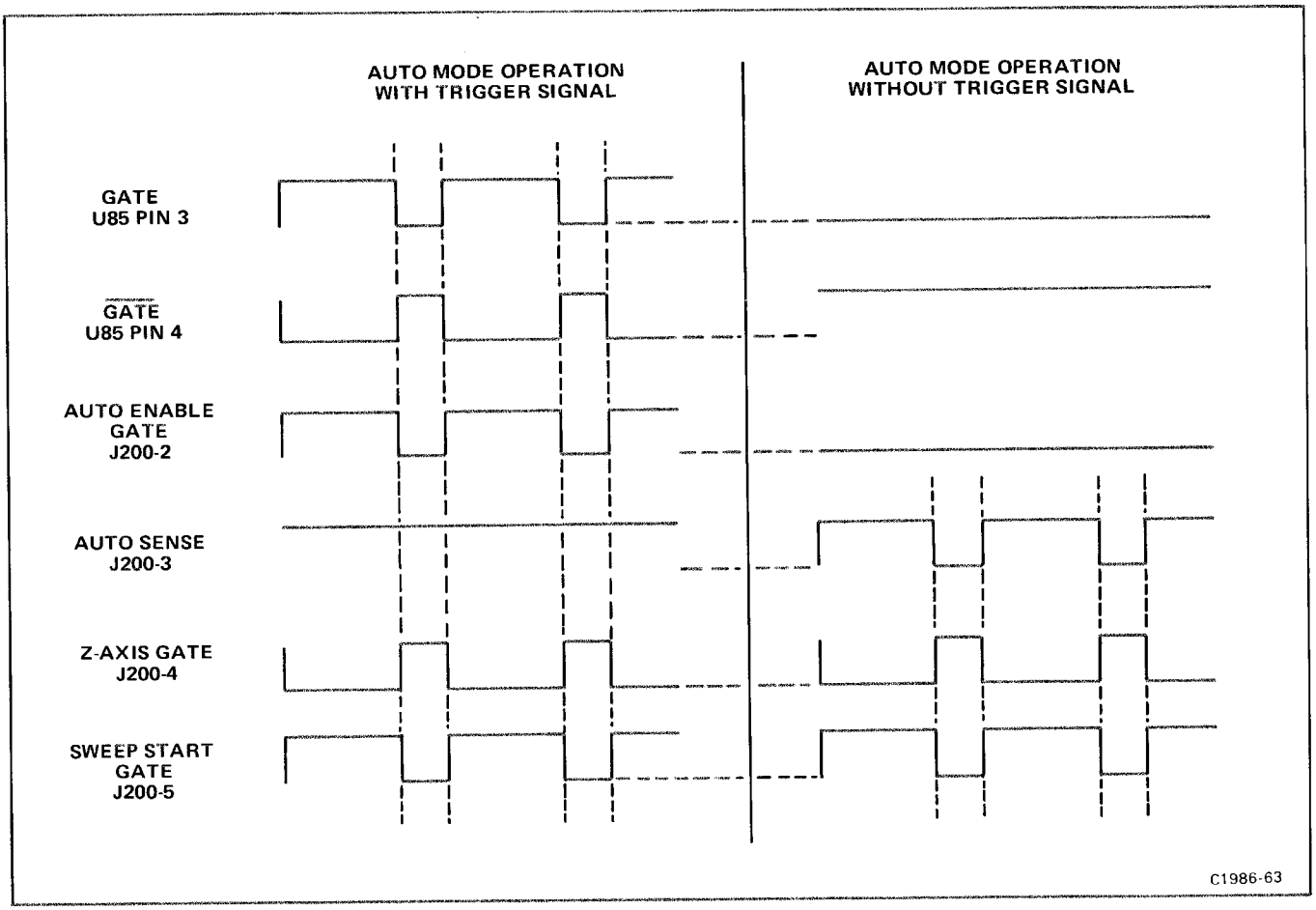

Figure 3-3. Timing diagram for Gate Generator stage (Q92, Q96, Q98).

Auto Mode

The Auto Control stage produces a free-running reference trace (bright base line) in the absence of a trigger signal.

A high level from MODE switch S230 is inverted by Q230 to set U220 pin 19 low, which selects AUTO MODE operation. In the presence of a trigger pulse from the Trigger Generator (diagram 2), a high level at U220 pin 1 discharges the auto stage which inhibits the Auto Sense signal from U220 pin 3. In the absence of a trigger pulse, the low level at U220 pin 1 enables the Auto Control stage. After a time delay determined by R228, C228, and circuitry internal to U220 pin 6, an Auto Sense signal is initiated from U220 pin 3 to the Trigger Generator (diagram 2).

Single Sweep Mode

Single Sweep operation provides display of only one sweep. After one sweep has run the sweep is inhibited until the SINGLE SWP RESET button is pressed. The READY light indicates that the sweep is ready to accept a trigger.

After completion of one sweep, the Holdoff Start pulse at U220 pin 16 causes the Swp Disable Out at pin 17 to rise high. A high level at U220 pin 12 initiates single sweep operation and holds the sweep disable out at U220 pin 17 after completion of the sweep. Momentary contact of the RESET push button places a low at U220 pins 14 and 15, which removes the sweep disable out from pin 17 and allows the Sweep Generator (diagram 4) to accept a trigger. Interface connector B15 provides a remote Single-Sweep Reset input from compatible mainframes.

HOLD OFF TIMING

The hold off stages prevent the Sweep Generator (diagram 4 from being retriggered until the sweep timing capacitors are discharged.

At the end of each sawtooth waveform from the Sweep Generator (diagram 4), a Holdoff Start pulse (high) is coupled to U220 pin 16. This pulse enables the hold off timing circuits at U220 pin 8, which sets the sweep disable out at U220 pin 17 high and the Hold Off signal at pin 10 low for the duration of the hold-off cycle. Hold-off timing (U220 pin 8) is provided by capacitors C211 through C215, and resistors R212 through R214. Transistors Q203 and Q204 prevent the Swp Disable Out

pulse at U220 pin 17 from falling low until the timing capacitors have discharged. Transistors Q212 and Q214 and front-panel HOLD OFF control R210 provide variable current to the timing components to change the hold-off time period.

LOCKOUT BUFFER AMPLIFIER

A Sweep Lockout pulse (high) may be initiated at interface connector pin B8 by mainframe switching functions. A high level, coupled from interface connector B8 through the Lockout Buffer Amplifier Q202 and Q206 to the Lockout input at U220 pin 18, initiates a Swp Disable pulse at U220 pin 17, thereby disabling the sweep. The Lockout pulse (high) is also applied through Q358 (diagram 4) to the hold off start input at U220 pin 16 to enable the hold off cycle.

HOLD OFF OUTPUT AMPLIFIER

The Hold Off Output Amplifier inverts and amplifies the Hold Off signal from U220 for the mainframe.

Transistor Q272 inverts the Hold Off signal from U220 to provide a high level when hold off is present. The inverted signal is coupled through emitter follower Q274 to interface connector B4.

4 SWEEP GENERATOR

The Sweep Generator produces a linear ramp waveform for the mainframe when gated by the Trigger Generator. The sweep trace is displayed either independently or as the intensified sweep (when used with a companion delayed time base unit) of an alternate display. The sweep ramp is also used as a time reference for the delay pickoff comparator (diagram 5). A sweep gate (unblanking) is also generated in this circuit block.

The linear sweep ramp waveform is produced by charging a capacitor from a constant-current source. The slope of the ramp determines the sweep rate of the displayed trace. Figure 3-5 is a block diagram of the Sweep Generator.

TIMING CURRENT SOURCE

The Timing Current Source stages generate a constant current for the Ramp Generator stages (see Figure 3-5).

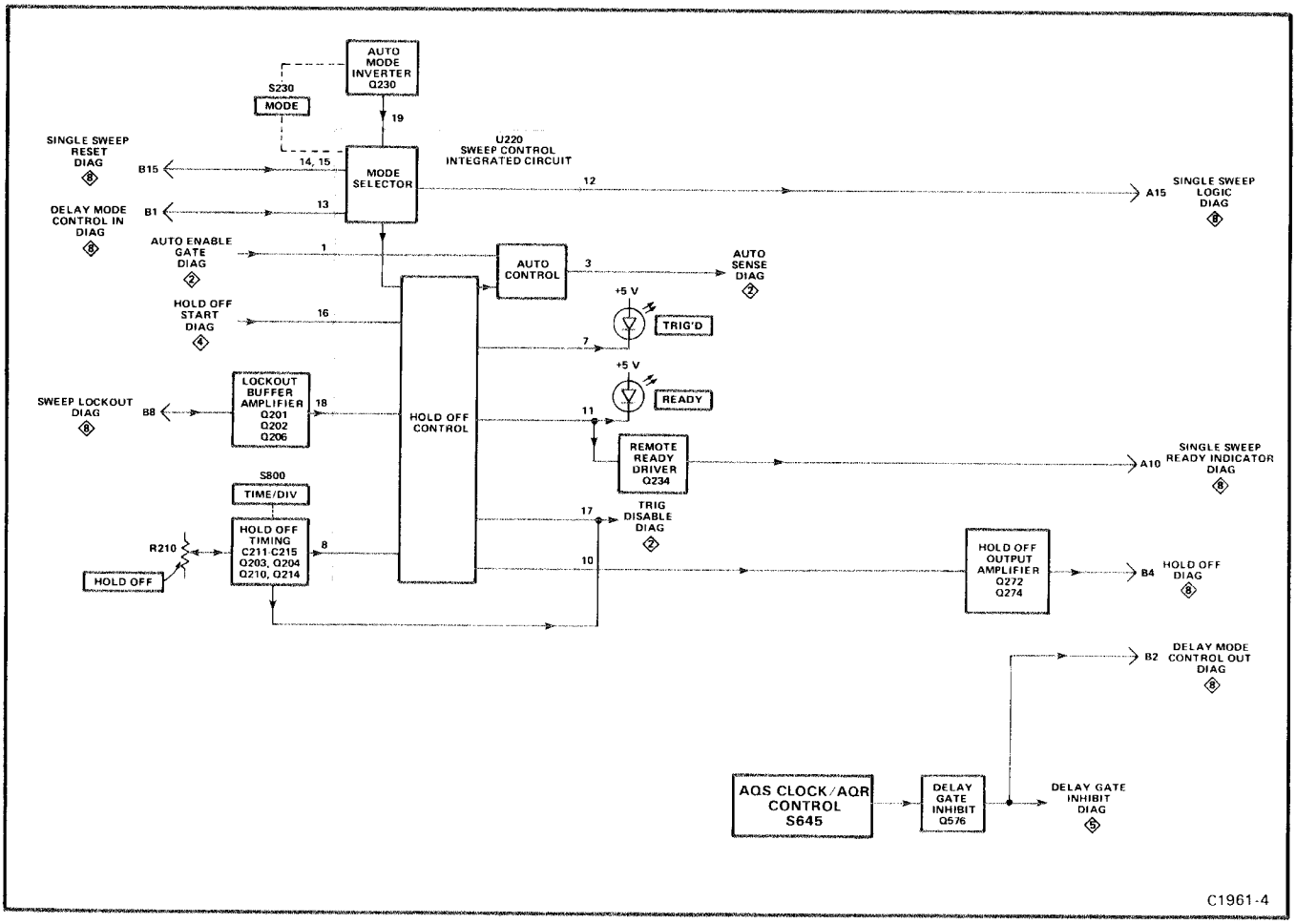

Figure 3-4. Detailed block diagram of Logic circuit.

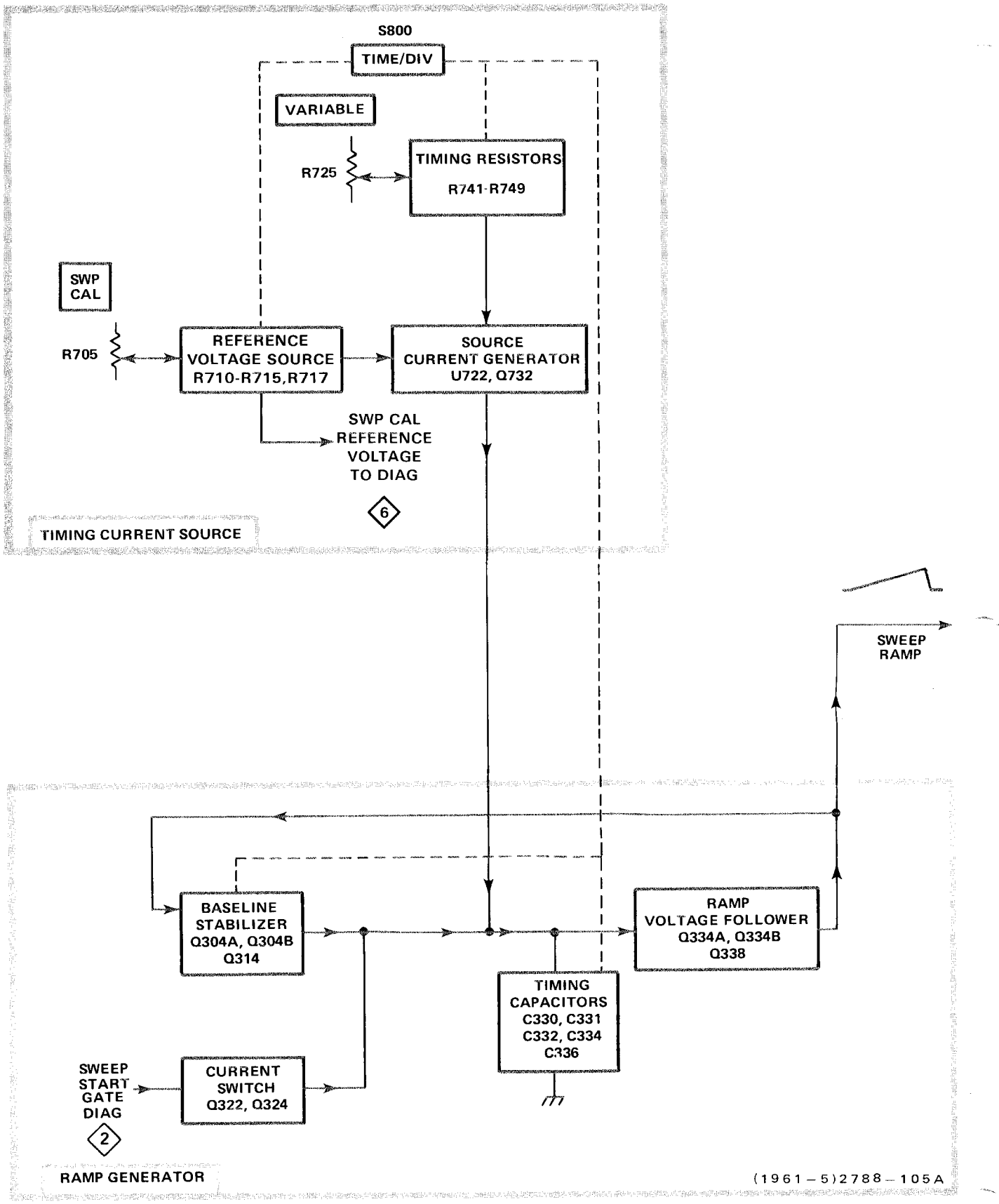

Figure 3-5. Detailed block diagram of Sweep Generator.

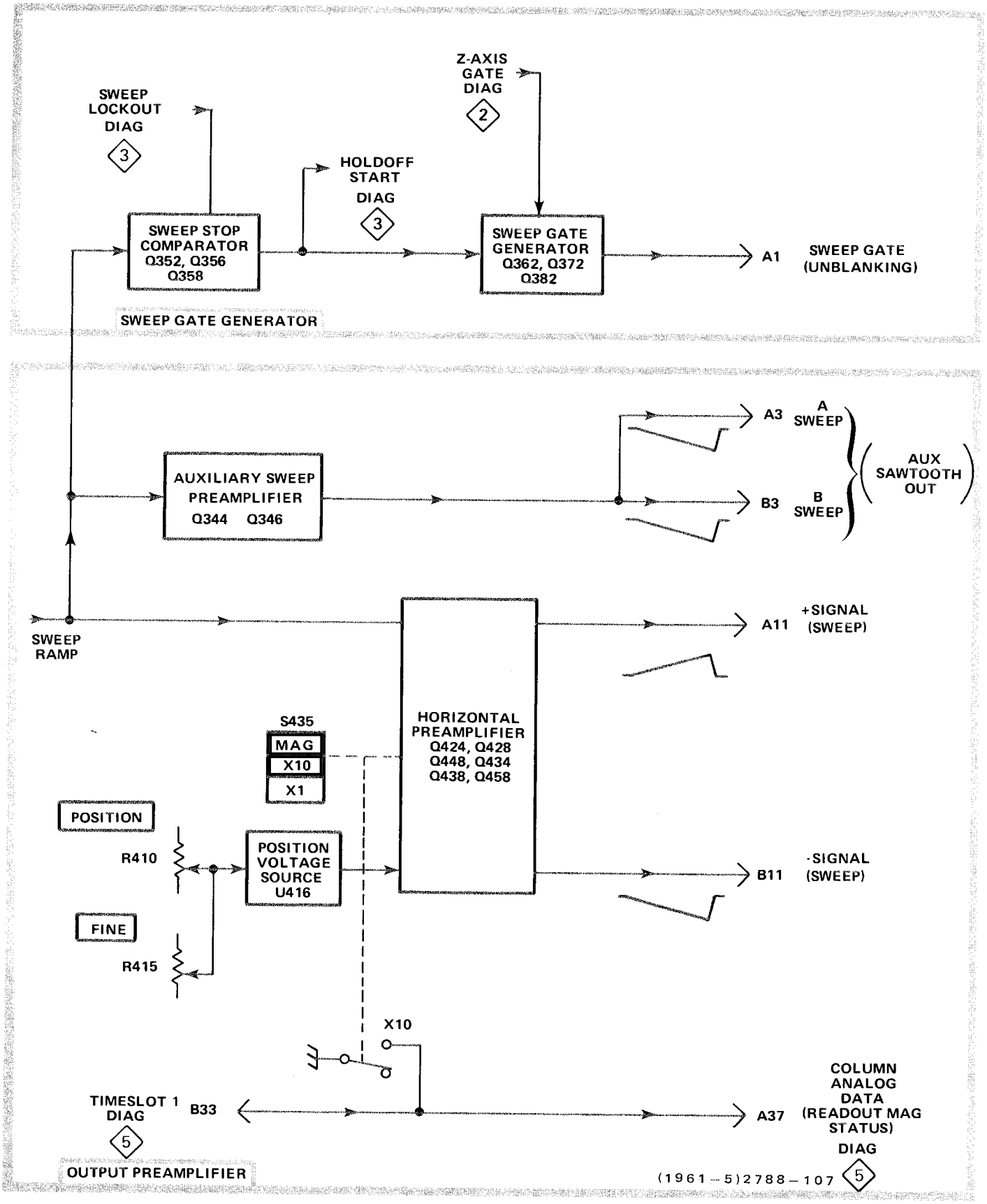

Figure 3-5 (cont). Detailed block diagram of Sweep Generator.

A Reference Voltage Source is established by the +50 volt supply and R710, R711, and R705 (front-panel SWP CAL adjustment).

The reference voltage is applied to the Source Current Generator stage. Operational amplifier U722 provides unity voltage gain and low output impedance. The output of U722 is connected through Q732 to the Timing Resistors (R741 through R749). Timing current is the result of the voltage across the Timing Resistors and flows through the collector of Q732 to the Ramp Generator stages.

RAMP GENERATOR

The Ramp Generator stages produce a linear positive going ramp for the Output Preamplifier and Sweep Gate Generator stages, and for delay pickoff in the Logic DVM (diagram 5). Refer to Figure 3-5.

Upon the arrival of a high-level Sweep Start Gate at the Current Switch stage, Q322 turns on and Q324 turns off. The source current from Q732 charges the Timing Capacitors (C332, C334, C336) in a positive ramp. Field effect transistors Q334A, Q334B, and transistor Q338 form a unity-gain Ramp Voltage Follower for the sweep ramp. The output of Q338 is connected to the Horizontal Preamplifier, Sweep Stop Comparator, Delay-Time Comparator, and Baseline Stabilizer stages.

When the Sweep Start Gate is low, Q322 turns off and Q324 turns on causing the Timing Capacitors (C332, C334, and C336) to discharge. The Baseline Stabilizer stage (Q304, Q314) maintains a constant level from which the ramp begins. The output of Q338 is compared (via Q304A) with the reference level at the base of Q304B. If the output of Q338 is less than the reference, Q314 will charge the timing capacitors through CR323 until the output and reference voltages are equal. If the output of Q338 is greater than the reference, Q314 conducts more and CR323 conducts less causing the Timing Capacitors to discharge through Q324 and R322. When the output and reference voltages are equal, the current through CR323 and Q732 equal the current through Q324.

HORIZONTAL PREAMPLIFIER

The Horizontal Preamplifier stages connect the differential sweep signal to the mainframe and provide an offset voltage for trace positioning. Provisions are made in these stages for sweep magnification, and a negative-going sawtooth signal is supplied to the mainframe for sawtooth output and special plug-in unit functions. Refer to Figure 3-5.

The sweep ramp voltage from Q338 is coupled to the Horizontal Preamplifier stage at the base of Q424. Transistors Q424 and Q434 form a single-ended to push-pull converter with Q428 and Q438 as current follower stages for the push-pull signal. Output Q448 and Q458 provide final amplification and connect the sweep signal to the mainframe.

The MAG switch, S435, increases the Horizontal Preamplifier gain ten times by connecting R431 and R430 in parallel with R442.

The Position Voltage Source stage combines the dc voltages of the FINE and POSITION controls to produce a position voltage level at the output of operational amplifier U416. This voltage level on the base of Q434 provides a ramp-waveform-offset voltage to horizontally position the displayed trace.

The Auxiliary Sweep Preamplifier stage provides a negative-going sweep ramp to the mainframe (via interface connector pins A3 and B3) for sawtooth output and special plug-in unit functions. Transistors Q344 and Q346 form a unity-gain inverting amplifier for the sawtooth signal from the Ramp Voltage Follower Stage. Diode CR344 provides emitter-base compensation.

SWEEP GATE GENERATOR

The Sweep Gate Generator produces an unblanking gate, at interface pin A1, for the Z-Axis system of the mainframe. When the sweep is displayed, the crt is unblanked (gate level high). The sweep is blanked (gate level low) between sweeps. Refer to Figure 3-5.

The sweep ramp is applied to the Sweep Stop Comparator stage. A reference voltage is set at the base of Q356. When the ramp voltage exceeds the reference voltage, Q352 turns off and Q356 couples a high level through common-base transistor Q358. The Sweep Stop Comparator output is coupled to the Sweep Gate Generator stage and to the Logic circuit (diagram 3) to initiate hold off.

The Z-Axis gate from the Trigger Generator circuit (diagram 2) is low at the start of the sweep. This low level turns off Q372. The resultant high-level sweep gate pulse at the collector of Q372 is coupled through emitter follower Q382 to the mainframe for sweep unblanking. At the end of the sweep, the high level from the Sweep Stop Comparator stage turns Q362 off and Q372 on. The resultant low is coupled through emitter follower Q382 to the mainframe for sweep blanking.

DVM

DELAY TIME COMPARATOR AND DELAY GATE GENERATOR

The Delay Time Comparator (DTC) produces a signal that goes positive when the sweep voltage is more positive than the delay comparison voltage from the ACQUIRE-STOP DELAY control. The DTC consists of Q512B and Q522A. (Q512A and Q522B are not used because +5V turns off Q528 via R529.) The DTC operates at sweep speeds from 5 s to 10 μs/Div. At sweep speeds above 10 μs/Div, a low level from Q607 (diagram 6) turns Q518 off. When Q518 is turned off, the DTC does not function,

and no Delay Gate occurs. Unity-gain buffer U535A couples the voltage from the ACQUIRE-STOP DELAY control to the comparator. When the Sweep Ramp voltage at the base of Q522A exceeds the reference voltage from U535A, Q522A shuts off and Q512B turns on. Because Q522A is turned off, the low level at its collector turns off Q564, the input of Schmitt trigger pair Q564-Q568. With Q564 turned off, Q568 conducts a greater current through Q574.

The Delay Gate Generator (DGG) produces the Delay Gate signal in response to the output of the Delay Time Comparator and the Z-Axis Gate line. The DGG consists of Q572 and Q574.

The Delay Gate starts when a low-logic level on the Z-Axis Gate line turns Q572 off. When Q572 is shut off, Q574 conducts all the current from Q568, which is off because the Sweep Ramp voltage is lower than the voltage from the ACQUIRE-STOP DELAY control. This causes Q574's collector voltage to produce a positive transition, which is the leading edge of the Delay Gate. When the Sweep Ramp voltage exceeds the voltage from the ACQUIRE-STOP DELAY control, Q522A turns off and Q512B turns on. This causes the Schmitt trigger transistor Q568 to conduct a greater current through Q574, whose collector voltage falls and forms the trailing edge of the Delay Gate. Emitter-follower Q578 applies the Delay Gate to pin B9 of the Interface Board's edge connector. Figure 3-6 shows the timing of the events that form the Delay Gate Signal.

If the 7B87 is in the A Horiz plug-in compartment and the INTERNAL AQS CLOCK/AQR button is pressed, S645 grounds the Delay Mode line. The Delay Mode line turns on Q576, which saturates and removes the collector voltage from Q574. In this situation the Delay Gate line stays at a low-logic level. This permits a time base in the B Horiz plug-in compartment to operate independently.

DIGITAL VOLTMETER

The Digital Voltmeter circuit converts the Delay Comparison Voltage, determined by the ACQUIRE-STOP DELAY front-panel control, to an accurate time measurement which is displayed on the crt by the mainframe readout system. The schematic for the Digital Voltmeter circuit is shown on diagram 5.

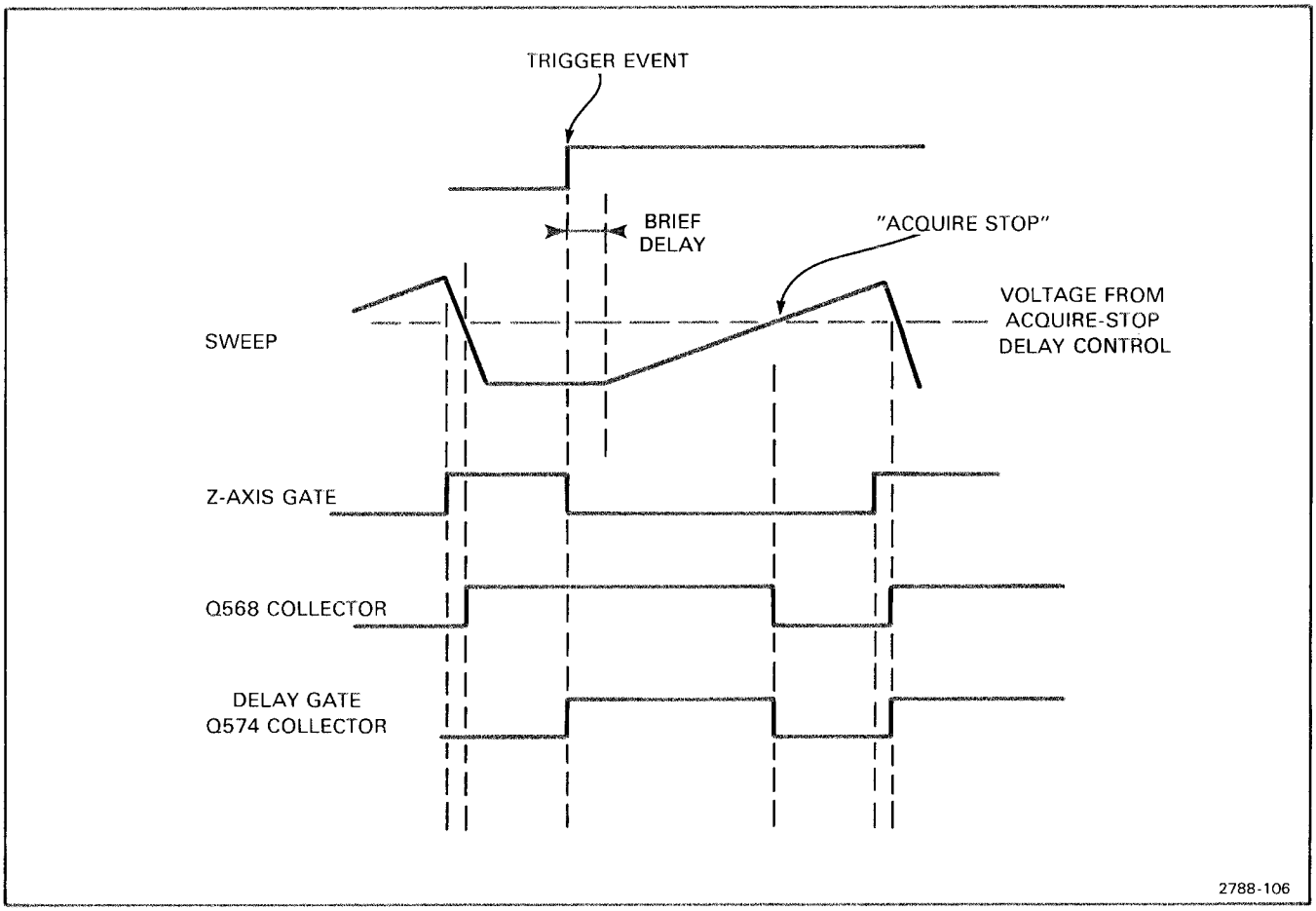

Figure 3-6. Timing of events that form the Delay Gate signal.

DELAY COMPARISON VOLTAGE-TO-RAMP CONVERTER

The Delay Comparison Voltage-to-Ramp Converter, U547, develops a negative-going ramp at CR552's anode. The current that flows through R537 and R539 (delay comparison current, determined by the ACQUIRE-STOP DELAY front-panel control) is integrated by U547 and C547 to form a negative-going ramp with a slope proportional to the delay comparison voltage. Consequently, the more positive the delay comparison voltage, the more negative the ramp will run.

After a period of time (determined by U590) diode CR547 turns on and adds reference current to the delay comparison current. This reference current polarity is opposite to the delay comparison current and at least 10 times greater. Therefore, the output of U547 becomes a positive-going ramp. When the positive-going ramp reaches about 7 volts, the Comparator stage switches and the Ramp control turns off CR547. The output of U547 becomes a negative-going ramp, completing the cycle.

The DVM Zero adjustment, R550, provides a dc offset current to set the quiescent operating level of the Delay Comparison. Voltage to Ramp Converter. Scaling adjustment R538 allows for calibration of the delay comparison current.

COMPARATOR

The Comparator circuitry drives the comparator input of U590. When the output of U547 rises to about 7 volts, it forward biases CR552, which turns on Q552. Inverters U556B and U566D provide rapid latchup of the positive-going signal from Q552 and U556C applies it to the comparator input of U590.

REFERENCE CURRENT SOURCE

The Reference Current Source determines the amount of current to be used for comparison with the delay comparison current. The front-panel SWP CAL control determines the absolute value of reference current. The Swp Cal reference input, on pin 1 of J100, changes the reference current value to compensate for different front-panel SWP CAL settings.

REFERENCE CURRENT INVERTER

The Reference Current Inverter acts as a current "mirror" to produce an equivalent current in opposite polarity. Thus, current flowing through R546 is reversed as it flows through R547. Reversing current flow allows U547 to sum the reference current with the delay comparison current.

The ramp control output of U590 controls the reference current switching. A high on pin 16 of U590 causes a low at U556A's output, which reverse biases CR555. This causes U535 to forward-bias CR547 and allows reference current to flow from the summing node at pin 2 of U547. A low at pin 16 of U590 forward-biases CR555, turning off CR547 and routing the reference current away from U547's summing node.

COUNTER AND ENCODER

The Counter and Encoder circuit consists essentially of a four-decade counter with a multiplexer and associated circuitry.

An integration cycle of 100,000 counts begins with the ramp control (pin 16) going high and starting a short internal delay. During the delay, the counters are cleared and set to their initial state. After the delay, the counters are enabled and increment until a transition occurs on the comparison input (pin 8) signaling that the counters contain the desired digital output which is a direct function of the delay comparison voltage. At this point clock pulses to the counters are disabled, the ramp control is set low, and the contents of the counter are latched. The counter then resumes operation.

Each decade counter counts synchronously with data read out by sequentially strobing U590's select lines, pins 3, 4, 5, and 6. The output appears at pin 18 as a current which varies from 0 ma to 1 ma in 100 μa steps.

Integrated circuit U590 uses S800 cam-switch control voltages at pins 10 and 11 for accurate 1, 2, and 5 sweep-speed scaling. The presence of voltages at pins 10 or 11 allows U590 to determine if it should be dividing by two or by five. An absence of voltage at both pins is interpreted as "divide by one."

CLOCK GENERATOR

The Clock board generates a Clock signal for digitizing mainframes such as the 7854. Diagram 6 depicts the circuitry on the Clock board. There are 10 groups of circuitry on diagram 6, as follows:

1. Control Logic. The Control Logic generates the signals that operate the X1-X10 Multiplexer.

2. Oscillator. The Oscillator produces a 20.48-MHz signal that serves as the reference for the Clock Generator.

3. First Divider. The First Divider produces outputs of 10.24, 5.12, 2.048, and 1.024 MHz and 512 kHz for the X1-X10 multiplexer.

4. X1-X10 Multiplexer. The X1-X10 Multiplexer selects its output based on the position of the MAG X1-X10 control.

5. Decade Divider. The Decade Divider furnishes five inputs to the Internal Clock Multiplexer. It produces the five inputs by dividing the output of the X1-X10 Multiplexer by 10, 100, 1,000, and 100,000.

6. Internal Clock Multiplexer. The Internal Clock Multiplexer selects one of the outputs of the Decade Divider as the input to the Output Clock Multiplexer.

7. Output Clock Multiplexer. The Output Clock Multiplexer selects the output of the Internal Clock Multiplexer, the Internal Clock divided by 1000, or the signal from the EXT CLOCK IN connector to be the "acquire clock" signal.

8. Intensify Circuit. The Intensify Circuit causes the mainframe to intensify the display between sweep start and the point selected by the ACQUIRE-STOP DELAY control.

9. External Clock Buffer. The External Clock Buffer is a high-impedance source follower which ensures that the 7B87 will not load the external signal source.

10. AQS CLOCK/AQR Switches. The AQS CLOCK/AQR switches control the Output Clock Multiplexer and the Intensify circuit.

CONTROL LOGIC

The Control Logic (CL) circuit produces a select input for Output Multiplexer U660, and enable inputs for X1 multiplexer U638 and X10 multiplexer U637. The CL circuit consists of U621A, U622A, B, C and D, and U623B, C and D.

When section 18 or 35 of TIME/DIV switch S800 is closed, U621A will be active and apply a high-logic level to multiplexer U660's pin 15 input. One or both of sections 18 and 35 is closed from 5s to 50 μs/div, and from 2 μs to 50 μs/div. Because of this, U621A applies a high-logic level to U660's pin 15 input at all TIME/DIV settings except 20, 10, and 5 μs, and 20 and 10 ns.

Gates U622A, B, C and D and U623B, C and D are wired so that they provide low-logic levels to the enable inputs of: a) X1 multiplexer U638 from 5s to 10 μs/div when the MAG button is set to X1, and b) X10 multiplexer U637 from 5s to 50 μs/div when the MAG button is set to X10. Table 3-1 is a truth table that gives details of this operation.

When the TIME/DIV switch is set between 5 s and 10 μs/Div, section 1 of S800 turns Q607 off. The high level output of Q607 permits the Delay Time Comparator (diagram 5) to operate. At settings between 5 μs and 10 ns/Div, Q607 is turned on, producing a low output level that disables the Delay Time Comparator.

OSCILLATOR

The Oscillator generates a 20.48-MHz signal that serves as the reference for the clock-generating circuitry. Gates U621B and C and crystal Y626 form the Oscillator.

The Oscillator has two enable inputs, which are connected to the TIME/DIV switch, via U622D, and to the AQS CLOCK/AQR switch. Both enable inputs must be at high-logic levels to allow oscillation.

When the TIME/DIV switch (S800) is set from 5 s to 10 μs/Div, section 11 is closed. The ground from S800 section 11 causes U622D to assert a high-logic level to U621B's pin 5 input, which enables the oscillator.

When the AQS CLOCK/AQR control is set to INTERNAL or INT ÷ 1000, R646 applies a high-logic level to U621C's pin 10 input. When the AQS CLOCK/AQR control is set

TABLE 3-1
Truth Table, TIME/DIV Setting vs. Strobes for U637 and U638

	MAG	U622C	Outputs U622D	Outputs U622B	U622A	U623C	Strobe for U637 (U623D)	Strobe for U638 (U623B)
5s to 50μs	L	L	H	H	L	H	H	L[1]
20 & 10μs	L	H	H	H	L	H	H	L[1]
5μs	L	H	L	H	H	L	H	H
2μs to 50ns	L	L	L	H	H	L	H	H
20ns, 10ns	L	H	L	H	H	L	H	H
5s to 50μs	H	L	H	H	L	H	L[2]	H
20μs, 10μs	H	H	H	L	H	L	H	H
5μs	H	H	L	L	H	L	H	H
2μs to 50ns	H	L	L	H	H	L	H	H
20ns, 10 ns	H	H	L	L	H	L	H	H

[1]Operates from 5s to 10μs/div, in X1 MAG.
[2]Operates from 5s to 50μs/div, in X10 MAG.

TABLE 3-2
Selected Inputs or X1 and X10 Multiplexers

Setting of TIME/DIV	X1 MAG											X10 MAG									
	Frequency of Clock (pin B5)	Selected Multiplexer Input										Frequency of Clock (pin B5)	Selected Multiplexer Input								
		U638					U660						U637			U660					
		÷2 D0	÷4 D2	÷10 D5	÷20 D1	÷40 D3	÷1 E2,3,6	÷10 E13	÷100 E5	÷1k E1	÷10k E15	÷100k E7		÷1 D5	÷2 D1	÷4 D3	÷1 E2,3,6	÷10 E13	÷100 E5	÷1k E1	÷10k E15	÷100k E7
5 s	20.48 Hz			X								X	204.8 Hz	X								X
2 s	51.2 Hz					X					X		512 Hz			X					X	
1 s	102.4 Hz				X						X		1.024 kHz		X						X	
.5 s	204.8 Hz			X							X		2.048 kHz	X							X	
.2 s	512 Hz					X				X			5.12 kHz			X				X		
.1 s	1.024 kHz				X					X			10.24 kHz		X					X		
50 ms	2.048 kHz			X						X			20.48 kHz	X						X		
20 ms	5.12 kHz					X			X				51.2 kHz			X			X			
10 ms	10.24 kHz				X				X				102.4 kHz		X				X			
5 ms	20.48 kHz			X					X				204.8 kHz	X					X			
2 ms	51.2 kHz					X		X					512 kHz			X		X				
1 ms	102.4 kHz				X			X					1.024 MHz		X			X				
.5 ms	204.8 kHz			X				X					2.048 MHz	X				X				
.2 ms	512 kHz					X							5.12 MHz			X	X					
.1 ms	1.024 MHz				X								10.24 MHz		X		X					
50 µs	2.048 MHz			X			X						20.48 MHz	X			X					
20 µs	5.12 MHz		X				X															
10 µs	10.24 MHz	X					X															

5 µs
2 µs
1 µs
.5 µs
.2 µs
.1 µs
50 ns
20 ns
10 ns

The acquire Clock does not run above 10 µs in X1 MAG, or above 50 µs in X10 MAG.

to EXT/AQR, S645 grounds the enable line and stops the oscillator.

FIRST DIVIDER

The First Divider (FD) receives the reference frequency from the oscillator and divides it to form five sub-frequencies (10.24, 5.12, 2.56, and 1.28 MHz, and 512 kHz). The FD consists of U635 and U636.

Counter U635 receives the 20.48-MHz reference frequency on its A input and produces a half-frequency output (10.24 MHz). The 10.24-MHz signal clocks counter U636, which provides signals at one-half (5.12 MHz) and one-fifth (2.048 MHz) the 10.24-MHz input frequency.

The 2.048-MHz output from U636 clocks U635's B input, and U635 provides signals at one-half (1.024 MHz) and one-fourth (512 kHz) the 2.048-MHz input.

X1-X10 MULTIPLEXER

The X1-X10 Multiplexer selects the input frequency designated by the levels on its A, B and C inputs. The circuit consists of X1 multiplexer U638, X10 multiplexer U637 and gate U621D. Table 3-2 shows which inputs the X1, X10 and Internal Clock multiplexers select for each setting of the TIME/DIV control.

DECADE DIVIDER

The Decade Divider (DD) receives the output of the X1-X10 Multiplexer, and from it provides five submultiple frequencies to the Internal Clock Multiplexer. The DD consists of counters U651, U652, U653 and U654.

Counters U651, U652 and U653 divide the output of the X1-X10 Multiplexer and furnish the ÷ 10, ÷ 100, ÷ 1 k, ÷ 10 k and ÷ 100 k signals to the Internal Clock Multiplexer.

Counter U654 receives the ÷ 10 signal from U653, and divides it by 100 to form the Int ÷ 1000 input for the output Clock Multiplexer.

INTERNAL CLOCK MULTIPLEXER

The Internal Clock Multiplexer receives the outputs of the Decade Divider, and selects the one designated by the outputs of the TIME/DIV switch as the Internal Clock. One-of-sixteen multiplexer U660 is the Output Clock Multiplexer. Table 3-2 shows which inputs U660 selects for each setting of the TIME/DIV control.

OUTPUT CLOCK MULTIPLEXER

The Output Clock Multiplexer receives the Internal Clock, the Int ÷ 1000 clock, and the Ext Clock signals and selects one of them to be the output Clock signal. Multiplexer U655, Q663, Q667 and Q671 form the Output Multiplexer.

The AQS CLOCK/AQR switch, S645, controls pins 10 and 11 of U655, and causes U655 to select one of its three inputs. Table 3-3 shows the three positions of S645 and the resulting output of multiplexer U655.

Transistors Q663, Q667 convert the TTL output of U655 to a level suitable for the mainframe.

INTENSIFY CIRCUIT

The Intensify circuit produces the Aux Z Axis signal, which intensifies the display via the mainframe's z-axis amplifier, when:

a. The 7B87 is in the B Horiz plug-in compartment, and

b. The Display B (pin B7) line is at a high-logic level.

If the Display B line is at a low-logic level when the 7B87 is in the B Horiz plug-in compartment, or if the 7B87 is in the A Horiz plug-in compartment, the Intensify circuit does not produce the Aux Z-Axis signal.

Although the 7B87 is not called a "delaying" time base, its "acquire stop" signal is identical to the Delay Gate in a delaying time base, and its delay-mode operation is the same. That is, the Delay Gate in the 7B87 has two functions—it sets the boundaries of the acquisition time in a digitizing mainframe, such as the 7854, and operates

TABLE 3-3
Operation of Output Multiplexer U655

S645 AQS CLOCK/AQR	U655 Select Inputs		Output of U655
	Pin 11	Pin 10	
INTERNAL	L	H	Internal Clock
INT ÷ 1000	H	H	Internal Clock ÷ 1000
EXT/AQR	H	L	External Clock

like the Delay Gate of a delaying time base. By setting the voltage on the Delay Mode line, the three AQS CLOCK/AQR pushbuttons, INTERNAL, INT ÷ 1000, and EXT/AQR, cause operating modes that correspond to Independent, B Starts After Dly, and B Triggerable After Dly, respectively (if the 7B87 is in the A Horiz plug-in compartment). The Delay Mode line controls Q576 and Q574. The voltage on the Delay Mode line, that goes to pin B2, is 0 V, +5.0 V, and +3.6 V, respectively, when the INTERNAL, INT divided by 1000, or EXT/AQR button is pressed.

7B87 IN A HORIZ PLUG-IN COMPARTMENT

INTERNAL BUTTON PRESSED

A low-logic level on the Delay Mode line turns on Q576 (refer to diagram 5), which saturates and removes the collector voltage from Q574. Without collector voltage, Q574 produces no Delay Gate signal. Transistor Q678 controls intensification in response to the voltage on pin A16. When the 7B87 is in the A Horiz plug-in compartment pin A16 will be at +5 V. Intensification then cannot occur because Q678 and Q680 keep Q681 turned off. When Q681 is off, its output turns off Q687, which prevents Q574 (diagram 5) from producing the Delay Gate. Either of these events will prevent a Delay Gate from occurring in the A Horiz compartment with the INTERNAL button pressed; one would be sufficient. When there is no Delay Gate there is no Aux Z-Axis signal and no intensification.

7B87 IN B HORIZ PLUG-IN COMPARTMENT

INTERNAL BUTTON PRESSED

A low-logic level on the Delay Mode line turns off Q576 (refer to diagram 5). The pin A16 input is at ground, which turns off Q680 via Q678, and Q680 turns on Q681. The output of Q681 turns on Q687, which has two effects:

a. It supplies collector voltage for Q574 via R687, and

b. If the Display B line is at a high-logic level, it turns on Q691 via R688.

Transistor Q691 conducts current from the mainframe, which intensifies the display.

When the TIME/DIV control is set to 10 μs or faster, +5 V turns on CR677 via R611. This clamps the emitter of Q691 to about +3.4 V, which turns it off and prevents intensification.

External Clock Buffer

The External Clock Buffer receives the signal from the EXT CLOCK IN connector, buffers it, and applies it to the Output Clock Multiplexer. The External Clock Buffer consists of Q642, Q643 and U623A.

Source-follower Q642 and current source Q643 present a high impedance to the input signal. Inverter U623A applies an inverted, TTL version of the Ext Clock In signal to multiplexer U655. Diodes CR641 and CR642 limit the voltage at Q642's gate to the -0.6 V to +5.6 V range.

AQS CLOCK/AQR Switches

The AQS CLOCK/AQR Switches control the Output Clock Multiplexer, activate the Delay Mode line for the Intensify circuit, and insert different resistances in the Ch 1, Analog Data Row line.

Two sections of S645, operated by the INTERNAL and EXT/AQR buttons, control the select lines for multiplexer U655. When a button is released, that switch's output line will be at a high-logic level; and when a button is pressed that switch's output line will be at a low-logic level. When the EXT/AQR line is pressed, the low-logic level on the output line stops the Oscillator.

Two sections of S645 select the voltages on the Delay Mode line, which are:

Button Pressed	Voltage on Delay Mode Line
INTERNAL	gnd
INT ÷ 1000	+5 V
EXT/AQR	+3.5 V

Acquire Clock Mode

When the 7B87 is in the B Horiz plug-in compartment, the current in the TS10 line indicates the Acquire Clock Mode, as follows:

TABLE 3-4
Current in CH1 Readout Line vs Acquire Clock Mode, During TS10

Acquire Clock Mode	Current	
	CH 1 Row	CH 2 Column
Internal	0.1 mA	0 mA
Internal ÷ 1000	0.2 mA	0 mA
External	0.3 mA	0 mA

When the 7B87 is installed in the B Horiz plug-in compartment, the information during TS10 is used by a digitizing mainframe (such as the 7854) to sense the 7B87's clock mode.

7 TIME/DIVISION AND READOUT SWITCHING

The Readout Switching circuits provide sweep rate and delay time information to the mainframe readout system. Readout circuitry appears on the Time/Division and Readout Switching diagram (7) at the rear of this manual.

BASIC READOUT SYSTEM

The readout system in 7000-series mainframes provides alpha-numeric display of information encoded by the plug-in units. This display is presented on the crt, and is written by the crt beam on a time-shared basis with the analog waveform display.

The readout system produces a pulse train consisting of ten negative-going pulses called time-slots. Each pulse represents a possible character in a readout word, and is assigned a time-slot number corresponding to its position in the word. Each time-slot pulse is directed to one of ten output lines, labeled TS 1 through TS 10 (time slots one through ten), which are connected to the vertical and horizontal plug-in compartments. Two output lines, row and column, are connected from each channel (two channels per plug-in compartment) back to the readout system.

Data is encoded on these output lines either by connecting resistors between them and the time-slot input lines or by generating equivalent currents. The resultant output is a sequence of analog current levels on the row and column output lines. The row and column current levels are decoded by the readout system to address a character matrix during each time slot, thus selecting a character to be displayed or a special instruction to be followed.

TIME/DIVISION READOUT

Time/Division readout is displayed on channel 1 (top of the graticule) corresponding to the plug-in compartment in which the time-base unit is installed. The sweep rate is selected by TIME/DIV switch S800, which also selects the resistors that determine the various readout characters shown in Table 3-5.

ACQUIRE-STOP DELAY TIME READOUT

The Acquire-Stop delay time is displayed on Channel 2 (bottom of graticule) corresponding to the plug-in compartment where the 7B87 is installed. The Acquire-Stop delay time is selected by the ACQUIRE-STOP DELAY control, R535, as explained in the Delay Line Comparator and Delay Gate Generator description (diagram 5).

The resistors that control the various delay time readout functions are shown in the channel 2 portions of Table 3-5. Numerical scaling for delay time readout (1, 2, 5 sequence) is explained in the Digital Voltmeter description (diagram 3).

8 INTERFACE CONNECTIONS AND POWER SUPPLY

The Interface Connectors connect control signals and power supply voltages between the mainframe and the time-base.

The Power Supply derives supply voltages from the mainframe supplies for power requirements unique to this instrument. Additional voltage regulation is also provided within the 7B87.

TABLE 3-5
Readout Character Selection

Characters	Time-Slot	Description	Encoded By	
			Channel 1 (Time/Division)	Channel 2 (Delay Time)
Decimal	TS-1	Determines decimal magnitude (number of zeros displayed or prefix change information)	R751, R752, R756	R753, R754, R754, R757
Uncalibrated (>)	TS-3	Indicates calibrated or uncalibrated sweep rates and delay times.	R761, R764	S280, R762, R763
1, 2, 5	TS-4	Scaling (TIME/DIV).	R771, R772, R773	
0 through 9	TS-4 TS-5 TS-6 TS-7	Scaling (Delay Time)		U686 6
m, μ, n	TS-8	Defines the prefix which modifies the units of measurement.	R781, R782 R783, R784	R785, R786 R787
s (seconds)	TS-9	Defines the unit of measurement.	R793, R794	R791, R792
Δ	TS-2	Indicates differential delay-time measurement.		R542, R543 5
blank space	TS-10	Indicates Acquire Clock Mode by magnitude of "now current". (Used by 7854 mainframe.)	R645, R647	

@

MAINTENANCE

This section of the manual contains information for performing preventive maintenance, troubleshooting, and corrective maintenance for this instrument.

PREVENTIVE MAINTENANCE

Preventive maintenance consists of cleaning, visual inspection, lubrication, etc. Preventive maintenance performed on a regular basis may prevent instrument breakdown and will improve the reliability of the instrument. The severity of the environment to which this instrument is subjected determines the frequency of maintenance. A convenient time to perform preventive maintenance is preceding adjustment of the instrument.

CLEANING

This instrument should be cleaned as often as operating conditions require. Accumulation of dirt on components acts as an insulating blanket and prevents efficient heat dissipation which can cause overheating and component breakdown.

CAUTION

Avoid the use of chemical cleaning agents which might damage the plastics used in this instrument. In particular, avoid chemicals that contain benzene, toluene, xylene, acetone, or similar solvents.

EXTERIOR

Loose dust accumulated on the front panel can be removed with a soft cloth or small brush. Dirt that remains can be removed with a soft cloth dampened with a mild detergent and water solution. Abrasive cleaners should not be used.

INTERIOR

Dust in the interior of the instrument should occasionally be removed due to its electrical conductivity under high-humidity conditions. The best way to clean the interior is to blow off the accumulated dust with dry, low-pressure air. Remove any dirt which remains with a soft brush or a cloth dampened with a mild detergent and water solution. A cotton-tipped applicator is useful for cleaning in narrow spaces.

SWITCH CONTACTS

Switch contacts and pads are designed to operate dry for the life of the switch. However, as the switches are not sealed, dust attracted to the contact area may cause switch contacts to become electrically noisy. Cleaning may be accomplished by flushing the contact area with isopropl alcohol or kelite (1 part kelite to 20 parts water). Do not use chemical cleaning agents that leave a film or that might damage plastic parts. Do not use cotton swabs or similar applicators to apply cleaning agents, as they tend to snag and leave strands of cotton on switch contacts. Should it become necessary to remove a switch for replacement or cleaning, refer to Component Removal and Replacement in this section.

VISUAL INSPECTION

This instrument should be inspected occasionally for such defects as broken connections, improperly seated semiconductors, damaged circuit boards, and heat-damaged parts.

The corrective procedure for most visible defects is obvious; however, particular care must be taken if heat-damaged components are found. Overheating usually indicates other trouble in the instrument; therefore, it is important that the cause of overheating be corrected to prevent recurrence of the damage.

LUBRICATION

Generally, there are no components in this instrument that require a regular lubrication program during the life of the instrument.

CAM SWITCH LUBRICATION

In most cases, factory lubrication should be adequate for the life of the instrument. However, if the switch has been disassembled for replacement of switch sub-parts, a lubrication kit containing the necessary lubricating materials and instructions is available through any Tektronix Field Office. Order Tektronix Part 003-0342-01. General Electric Versilube® silicone grease should be applied sparingly so that the lubricant does not get on the contacts. Refer to Figure 4-1 for lubrication instructions.

SEMICONDUCTOR CHECKS

Periodic checks of the semiconductors in this instrument are not recommended. The best check of semiconductor performance is actual operation in the instrument. More details on checking semiconductor operation are given under Troubleshooting.

ADJUSTMENT AFTER REPAIR

After any electrical component has been replaced, the adjustment of that particular circuit should be checked, as well as the adjustment of other closely related circuits. The Performance Check and Adjustment procedure in this manual provides a quick and convenient means of checking instrument operation. In some cases, minor troubles may be revealed or corrected by adjustment.

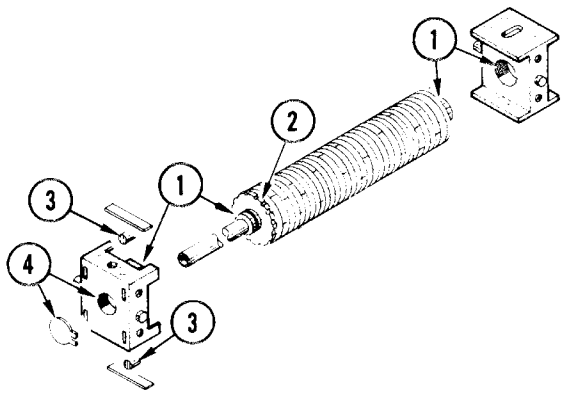

(1) Apply lubricant to the drum journals and mating surface in the mounting bearings.

(2) Apply lubricant to the wear surface of the index wheel.

(3) Apply lubricant to the index roller and roller guide in the front bearing. A thin film should be applied to the inner face of the detent springs if more than one spring is replaced.

(4) Ensure that some lubricant is present at the interface between the bearing and retainer clip.

C1967-2

Figure 4-1. Lubrication procedure for a typical cam switch.

TROUBLESHOOTING

The following information is provided to help troubleshoot this instrument. Information contained in other sections of this manual should be used along with the following information to aid in locating the defective component. An understanding of the circuit operation is very helpful in locating troubles, particularly where integrated circuits are used.

TROUBLESHOOTING AIDS

DIAGRAMS

Circuit diagrams are given on foldout pages in section 8. The component number and electrical value of each component in this instrument is shown on the diagrams. Components that are mounted on circuit boards are outlined on the diagrams with a heavy black line.

VOLTAGES AND WAVEFORMS

Typical operating voltages are shown on the diagrams. Voltage conditions given on the diagrams page indicate the test equipment used and the front-panel control status necessary to obtain the given voltages.

Typical operating waveforms are shown next to the diagram where they were measured. Each waveform is numbered to locate on the diagram the point where the waveform was taken. Waveform Conditions given on the diagram page list the test equipment used and the front-panel control status necessary to obtain the given waveform.

CIRCUIT-BOARD ILLUSTRATIONS

Circuit-board illustrations are shown on the foldout page preceding the associated diagram. Each board-mounted electrical component is identified by its circuit number, as are interconnecting wires and connectors.

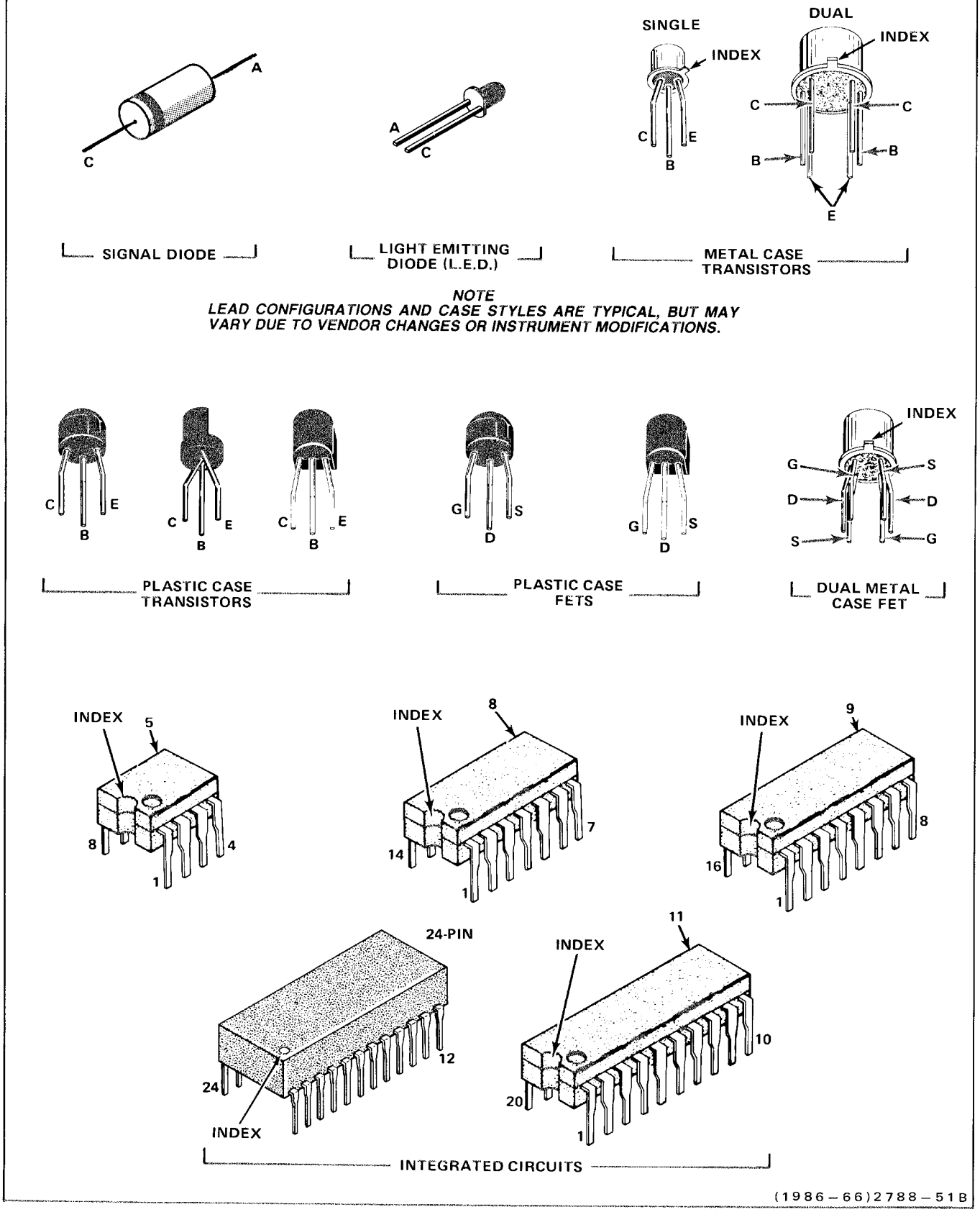

Figure 4-2. Semiconductor lead configuration.

Figure 8-2, in the front of the diagrams section, shows the location and assembly number of each circuit board in this instrument.

SWITCH CAM IDENTIFICATION

Switch cam numbers shown on diagrams indicate the position of each cam in the complete switch assembly. The switch cams are numbered from front to rear.

DIODE COLOR CODE

The cathode end of each glass-encased diode is indicated by a stripe, a series of stripes, or a dot. The cathode and anode ends of metal-encased diodes are identified by the diode symbol marked on the case. For most silicon or germanium diodes with a series of stripes, the color code identifies the four significant digits of the JEDEC or vendor number using the resistor color-code system (e.g., a diode color-coded yellow-brown-green-red indicates a 1N-4152 diode).

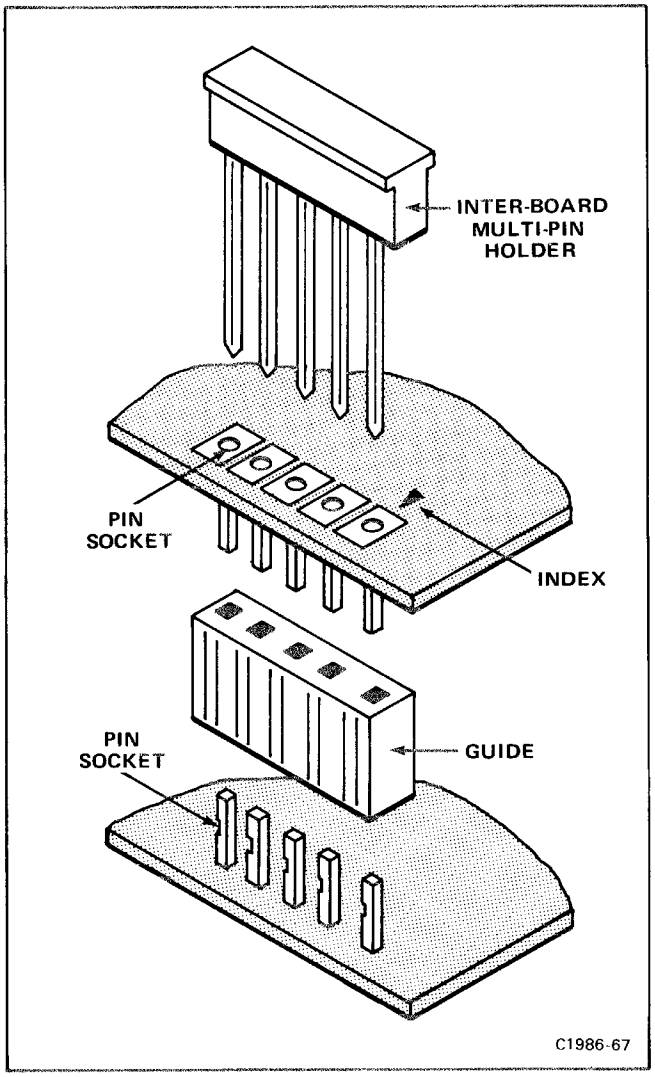

Figure 4-3. Inter-board multi-pin connector assembly.

WIRING COLOR CODE

Insulated wire and cable used in this instrument is color-coded to facilitate circuit tracing.

SEMICONDUCTOR LEAD CONFIGURATIONS

Figure 4-2 illustrates the lead configurations for all semiconductors used in this instrument. Some plastic-case transistors have lead configurations that do not agree with those shown here. If a replacement transistor is made by a different manufacturer than the original, check the manufacturer's lead configuration diagram. All transistor sockets in this instrument are wired for the standard lead configuration used for metal-case transistors.

INTER-BOARD PIN CONNECTOR IDENTIFICATION

The inter-board pin connector sockets are installed on circuit boards, in groups of 5 sockets (as in Fig. 4-3). Socket number 1 is indexed on the circuit board with either a triangular mark or the number 1. Each group of sockets is identified by its J (jack) number etched on the circuit board. The J numbers correlate to the J (jack) and P (plug) circuit numbers on the schematic diagrams.

MULTI-PIN CONNECTOR IDENTIFICATION

Multi-pin connectors mate with groups of pins soldered to circuit boards. Pin number 1 is indexed with a triangular mark on the circuit board and molded on the holder of the multi-pin connector, as shown in Figure 4-4. Each group of pins is identified by its corresponding J

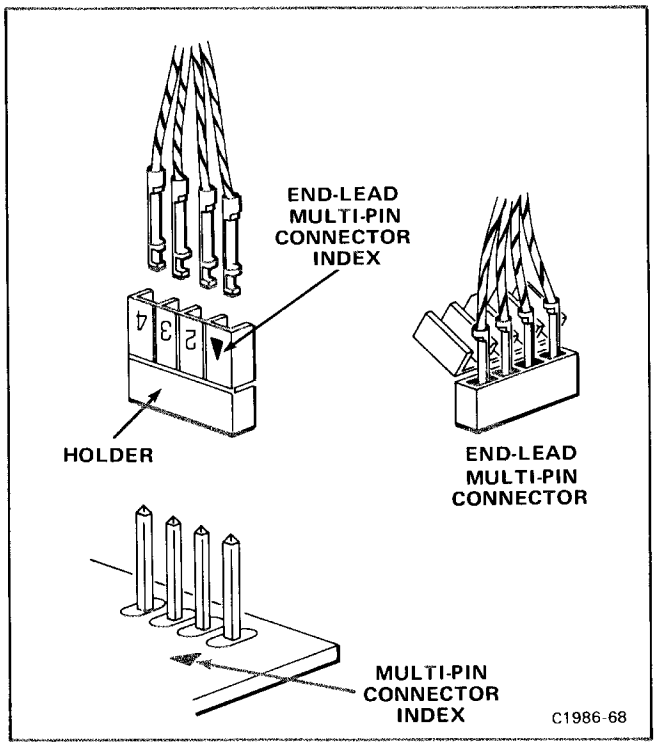

Figure 4-4. End-lead multi-pin connector assembly.

number etched on the circuit board. The J numbers, on the circuit boards, correlate to the J and P component numbers on the schematic diagrams.

INTERFACE CONNECTOR PIN LOCATIONS

The Interface circuit board couples the plug-in unit to the associated mainframe (oscilloscope). Figure 4-5 identifies the pins on the interface connector as shown on Interface Connectors and Power Supply diagram 8 in the diagrams section.

PERFORMANCE CHECK AND ADJUSTMENT

The Performance Check and Adjustment procedure, given in section 5 of this manual, provides a quick and convenient means of checking instrument operation. In some cases, minor troubles may be revealed or corrected by adjustment.

STATIC-SENSITIVE DEVICES

CAUTION

Static discharge can damage any semiconductor component in this instrument.

This instrument contains electrical components that are susceptible to damage from static discharge. See Table 4-1 for relative susceptibility of various classes of semiconductors. Static voltage of 1 kV to 30 kV are common in unprotected environments.

Observe the following precautions to avoid damage.

TABLE 4-1
Relative Susceptibility to Static Discharge Damage

Semiconductor Classes	Relative Susceptibility Levels[1]
MOS or CMOS microcircuits or discretes, or linear microcircuits with MOS inputs. (Most sensitive)	1
ECL	2
Schottky signal diodes	3
Schottky TTL	4
High-frequency bipolar transistors	5
JFETs	6
Linear Microcircuits	7
Low-power Schottky TTL	8
TTL (Least sensitive)	9

[1]Voltage equivalent for levels:

1 = 100 to 500 V 4 = 500 V 7 = 400 to 1000 V (est.)
2 = 200 to 500 V 5 = 400 to 600 V 8 = 900 V
3 = 250 V 6 = 600 to 800 V 9 = 1200 V

(Voltage discharged from a 100 pF capacitor through a resistance of 100 ohms.)

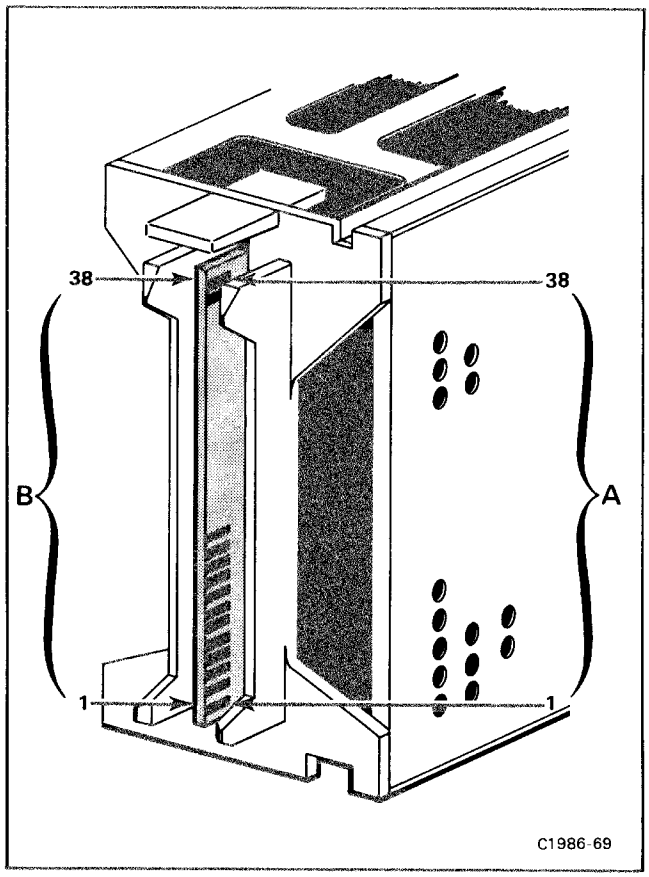

Figure 4-5. Location of pin numbers on Interface connector.

1. Minimize handling of static-sensitive components.

2. Transport and store static-sensitive components or assemblies in their original containers, on a metal rail or on conductive foam. Label any package that contains static-sensitive assemblies or components.

3. Discharge the static voltage from your body by wearing a wrist strap while handling these components. Servicing static-sensitive assemblies or components should be performed only at a static-free work station by qualified service personnel.

4. Nothing capable of generating or holding a static charge should be allowed on the work station surface.

5. Keep the component leads shorted together whenever possible.

6. Pick up components by the body, never by the leads.

7. Do not slide the components over any surface.

8. Avoid handling components in areas that have a floor or work-surface covering capable of generating a static charge.

9. Use a soldering iron that is connected to earth ground.

10. Use only special anti-static suction type or wick type desoldering tools.

TROUBLESHOOTING EQUIPMENT

The following equipment, in addition to that listed in the Performance Check and Adjustment section, is useful for troubleshooting.

Transistor Tester

Description: Dynamic-type tester.

Purpose: Test semiconductors.

Recommended Tektronix types: 576 Curve Tracer, 577/177 Curve Tracer system, 7CT1N Curve Tracer unit and a 7000-series oscilloscope system, or a 5CT1N Curve Tracer unit and a 5000-series oscilloscope.

Multimeter

Description: Voltmeter, 10 megohm input impedance and a range from 0 to at least 50 volts dc; accuracy, within 0.1%. Ohmmeter, 0 to 20 megohms. Test probes should be insulated to prevent accidental shorting.

Purpose: Check voltage and resistance.

Test Oscilloscope

Description: Frequency response, dc to 100 megahertz minimum; deflection factor, 5 millivolts to 5 volts/division. A 10X, 10 megohm voltage probe should be used to reduce circuit loading.

Purpose: Check operating waveforms.

TROUBLESHOOTING TECHNIQUES

The following troubleshooting procedure is arranged to check the simple trouble possibilities before proceeding with extensive troubleshooting. The first few checks ensure proper connection, operation, and adjustment. If the trouble is not located by these checks, the remaining steps aid in locating the defective component. When the defective component is located, it should be replaced using the replacement procedure given under Corrective Maintenance.

TROUBLESHOOTING PROCEDURE

1. CHECK CONTROL SETTINGS. Incorrect control settings can indicate a trouble that does not exist. If there is any question about the correct function or operation of any control, see Operating Instructions, Section 2.

2. CHECK ASSOCIATED EQUIPMENT. Before troubleshooting, check that the equipment used with this instrument is operating correctly. Check that the signal is properly connected and that the interconnecting cables are not defective. Also, check the power source. If the trouble persists, the time-base unit is probably at fault.

3. VISUAL CHECK. Visually check the portion of the instrument in which the trouble is located. Many troubles can be located by visible indications such as unsoldered connections, broken wires, damaged circuit boards, damaged components, etc.

4. CHECK INSTRUMENT ADJUSTMENT. Check the adjustment of this instrument, or the affected circuit if the trouble appears in one circuit. The apparent trouble may be the result of misadjustment. Complete adjustment instructions are given in the Performance Check and Adjustment, Section 5.

5. ISOLATE TROUBLE TO A CIRCUIT. To isolate trouble to a circuit, note the trouble symptom. The symptom often identifies the circuit in which the trouble is located. When trouble symptoms appear in more than one circuit, check the affected circuits by taking voltage and waveform readings. Incorrect operation of all circuits often indicates trouble in the power supply. Check first for correct voltages of the individual supplies. However, a defective component elsewhere in the instrument can appear as a power-supply trouble and may also affect the operation of other circuits.

Figure 4-6 provides a guide for locating a defective circuit. Start at the top of the chart and perform the checks given on the left side of the page until a step is found that does not produce the indicated results. Further checks, or the circuit in which the trouble is probably located, are listed to the right of the step. The shaded blocks on the Troubleshooting Chart indicate circuit(s) that may cause instrument malfunction. The circuit(s) listed in shaded blocks are discussed in detail in the Theory of Operation section of this manual. This chart does not include checks for all possible defects; use steps 6 and 7 in such cases.

After the defective circuit has been located, proceed with steps 6 and 7 to locate the defective component(s).

6. CHECK VOLTAGES AND WAVEFORMS. Often the defective component can be located by checking for the correct voltages and waveforms in the circuit. Refer to the diagrams section at the rear of the manual for typical voltages and waveforms.

NOTE

Voltages and waveforms given on the diagrams are not absolute and may vary slightly between instruments. To obtain operating conditions similar to those used to take these readings, see the voltage and waveforms page adjacent to each schematic diagram. Note the recommended test equipment, front-panel control settings, voltage and waveform conditions, and test equipment cable connection instructions.

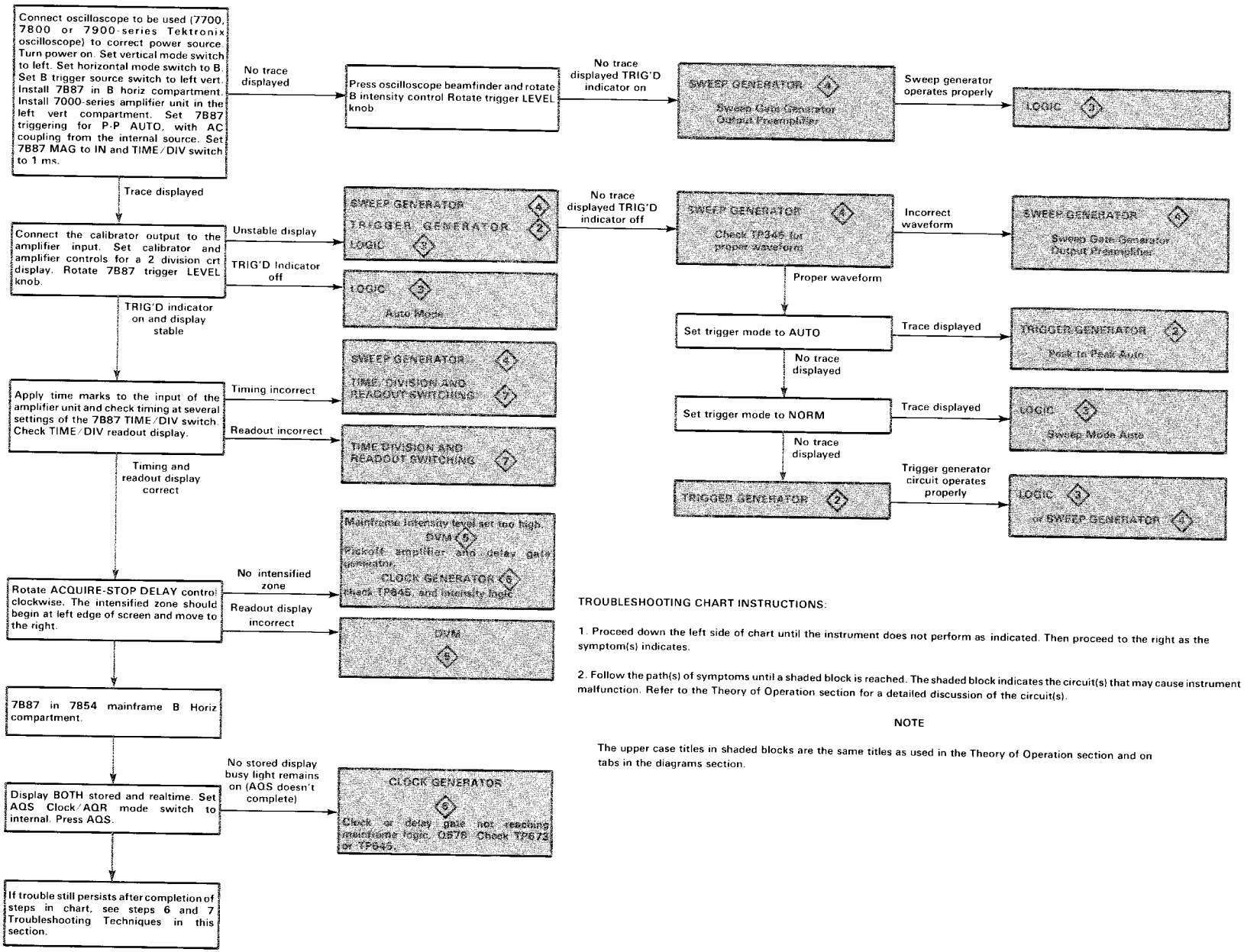

Figure 4-6. 7B87 troubleshooting chart.

7. CHECK INDIVIDUAL COMPONENTS. The following procedures describe methods for checking individual components. Two-lead components that are soldered in place are best checked by first disconnecting one end. This isolates the measurement from the effects of surrounding circuitry.

CAUTION

To avoid component damage, disconnect the power source before removing or replacing semiconductors.

Transistors. The best check of transistor operation is actual performance under operating conditions. A transistor can be most effectively checked by substituting a new component or one that has been checked previously. However, be sure that circuit conditions are not such that a replacement transistor might also be damaged. If substitute transistors are not available, use a dynamic tester. Static-type testers are not recommended, since they do not check operation under simulated operating conditions.

Integrated Circuits. IC's can be checked with a voltmeter, test oscilloscope, or by direct substitution. A good understanding of circuit operation is desirable when troubleshooting circuits using IC's. Use care when checking voltages and waveforms around the IC's so that adjacent leads are not shorted together. A convenient means of clipping a test probe to the 14- and 16-pin IC's is with an IC test clip. This device also serves as an extraction tool. The lead configuration for the semiconductors used in this instrument are shown in Figure 4-2, and also on a pullout page in the front of the diagrams section.

CAUTION

Do not use an ohmmeter scale that has a high internal current. High currents may damage the diode.

Diodes. A diode can be checked for an open or shorted condition by measuring the resistance between terminals with an ohmmeter having a low internal source current, such as the R X 1K scale. The resistance should be very high in one direction and very low when the meter leads are reversed.

The cathode end of each glass-encased diode is indicated by a stripe, a series of stripes, or a dot. The cathode and anode ends of a metal-encased diode are identified by the diode symbol marked on the case. For most silicon or germanium diodes with a series of stripes, the color code identifies the four significant digits of the JEDEC or vendor number using the resistor color-code system (e.g., a diode color-coded yellow-brown-green-red indicates a 1N-4152 diode).

Resistors. Check resistors with an ohmmeter. See the Replaceable Electrical Parts list for the tolerance of the resistors used in this instrument. Resistors normally do not need to be replaced unless the measured value varies widely from that specified.

Inductors. Check for open inductors by checking continuity with an ohmmeter. Shorted or partially shorted inductors can usually be found by checking the waveform response when high-frequency signals are passed through the circuit. Partial shorting often reduces high-frequency response.

Capacitors. A leaky or shorted capacitor can usually be detected by checking resistance with an ohmmeter on the highest scale. Do not exceed the voltage rating of the capacitor. The resistance reading should be high after initial charge of the capacitor. An open capacitor can best be detected with a capacitance meter or by checking that the capacitor passes ac signals.

8. REPAIR AND ADJUSTMENT. If any defective parts are located, follow the replacement procedures given in Corrective Maintenance. Be sure to check the performance of any circuit that has been repaired or had any electrical components replaced.

CORRECTIVE MAINTENANCE

Corrective maintenance consists of component replacement and instrument repair. Special techniques required to replace components in this instrument are given here.

OBTAINING REPLACEMENT PARTS

All electrical and mechanical part replacements can be obtained through your Tektronix Field Office or representative. However, many of the standard electronic components can be obtained locally in less time than is required to order them from Tektronix, Inc. Before purchasing or ordering replacement parts check the parts list for value, tolerance, rating, and description.

NOTE

When selecting replacement parts, remember that the physical size and shape of a component may affect the performance of the instrument, particularly at high frequenies. All parts should be direct replacements unless a different component will not adversely affect instrument performance.

Some parts are manufactured or selected by Tektronix, Inc. to satisfy particular requirements, or are manufactured to specifications for Tektronix, Inc. Most of the mechanical parts used in this instrument have been manufactured by Tektronix, Inc. To determine the manufacturer of parts, first refer to parts list, then to the Cross Index—Mfr. Code Number to Manufacturer.

When ordering replacement parts from Tektronix, Inc., include the following information:

1. Instrument type.

2. Instrument serial number.

3. A description of the part (if electrical, include circuit number).

4. Tektronix part number.

SOLDERING TECHNIQUES

WARNING

To avoid electrical shock, disconnect the instrument from the power source before soldering.

The reliability and accuracy of this instrument can be maintained only if proper soldering techniques are used when repairing or replacing parts. General soldering techniques, which apply to maintenance of any precision electronic equipment, should be used when working on this instrument. Use only 60/40 rosin-core, electronic-grade solder. The choice of soldering iron is determined by the repair to be made. When soldering on circuit boards, use a 15- to 40-watt pencil-type soldering iron with a 1/8-inch wide, wedge-shaped tip. A higher wattage soldering iron may separate the printed wiring from its base material. Keep the tip properly tinned for best heat transfer to the solder joint. Avoid excessive heat; apply only enough heat to remove the component or to make a good solder joint. Also, apply only enough solder to make a firm solder joint; do not apply too much solder.

CAUTION

All circuit boards, except the readout circuit board, in this instrument are multilayer type boards with a conductive path(s) laminated between the top and bottom board layers. All soldering on these boards should be done with extreme care to prevent breaking the connections to the center conductor(s); only experienced maintenance personnel should attempt repair of these boards.

For metal terminals (e.g., switch terminals, potentiometers, etc.) a higher wattage-rating soldering iron may be required. Match the soldering iron to the work being done. For example, if the component is connected to the chassis or other large heat-radiating surface, it will require a 75-watt or larger soldering iron.

The following techniques should be used to replace a component on a circuit board:

1. Grip the component lead with long-nose pliers. Touch the soldering iron to the lead at the solder connection. Do not lay the iron directly on the board, as it may damage the board.

2. When the solder begins to melt, gently pull the lead out. If unable to pull out the lead without using force, try removing the other end of the component as it may be more easily removed.

NOTE

The reason some component leads are troublesome to remove is due to a bend placed on each lead during the manufacturing process. The bent leads hold components in place during a process that solders many components at one time.

If a component lead is extremely difficult to remove, it may be helpful to straighten the leads on the back side of the board with a small screwdriver or pliers while heating the soldered connection.

Use only enough heat to remove the component lead without removing the solder from the board. If it is desired to remove solder from a circuit-board hole for easier installation of a new component, a solder-removing wick should be used.

3. Bend the leads of the new component to fit the holes in the board. If the component is replaced while the board is mounted in the instrument, cut the leads so they will just protrude through the board. Insert the leads into the holes so the component is firmly seated against the board (or as positioned originally). If it does not seat properly, heat the solder and gently press the component into place.

4. Touch the iron to the connection and apply a small amount of solder to make a firm solder-joint. To protect heat-sensitive components, hold the lead between the component body and the solder joint with a pair of long-nose pliers or other heat sink.

5. Clip any excess lead protruding through the board (if not clipped in step 3).

6. Clean the area around the solder connection with a flux-removing solvent. Be careful not to remove information printed on the board.

COMPONENT REMOVAL AND REPLACEMENT

WARNING

To avoid electrical shock, disconnect the instrument from the power source before replacing components.

The exploded-view drawing associated with the Replaceable Mechanical Parts list may be helpful in the removal or disassembly of individual components or subassemblies. Component location and circuit board locations are shown in the diagrams section.

CIRCUIT BOARDS

If a circuit board is damaged beyond repair, replace the entire board assembly. Part numbers for completely wired boards are given in the Replaceable Electrical Parts list.

A3-READOUT CIRCUIT BOARD. To remove the circuit board, follow the procedure given in Figure 4-7.

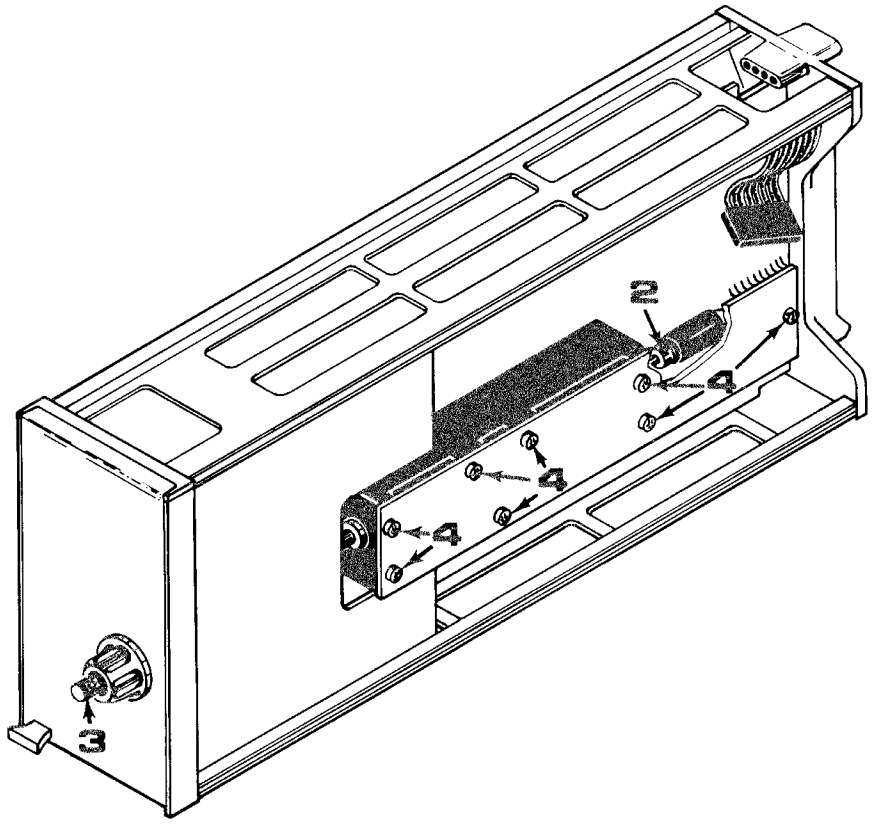

REMOVE READOUT BOARD AS FOLLOWS:

1. Note index of multi-pin connector attached to board and disconnect cable.
2. Loosen set screw on variable switch assembly.
3. Remove VARIABLE (CAL IN) TIME/DIV knob and attached shaft out the front of the instrument.
4. Remove the 8 securing screws from board.
5. Lift board away from cam switch assembly.

TO REPLACE READOUT BOARD, REVERSE THE ORDER OF REMOVAL.

C1986-70

Figure 4-7. Readout board removal procedure.

@

A2-TRIGGER CIRCUIT BOARD. To remove the circuit board:

1. Remove 3 inter-board multi-pin connectors (see Fig. 4-3 for identification).

2. Remove 2 screws from circuit board.

3. Lift rear of circuit board away from frame and slide board to the rear until pushbutton switches are clear of the front panel.

4. Note wire color on single-conductor shielded cables (see Fig. 4-8) and connector to which each is attached.

5. Disconnect cables from back of circuit board.

To replace the circuit board, reverse the order of removal.

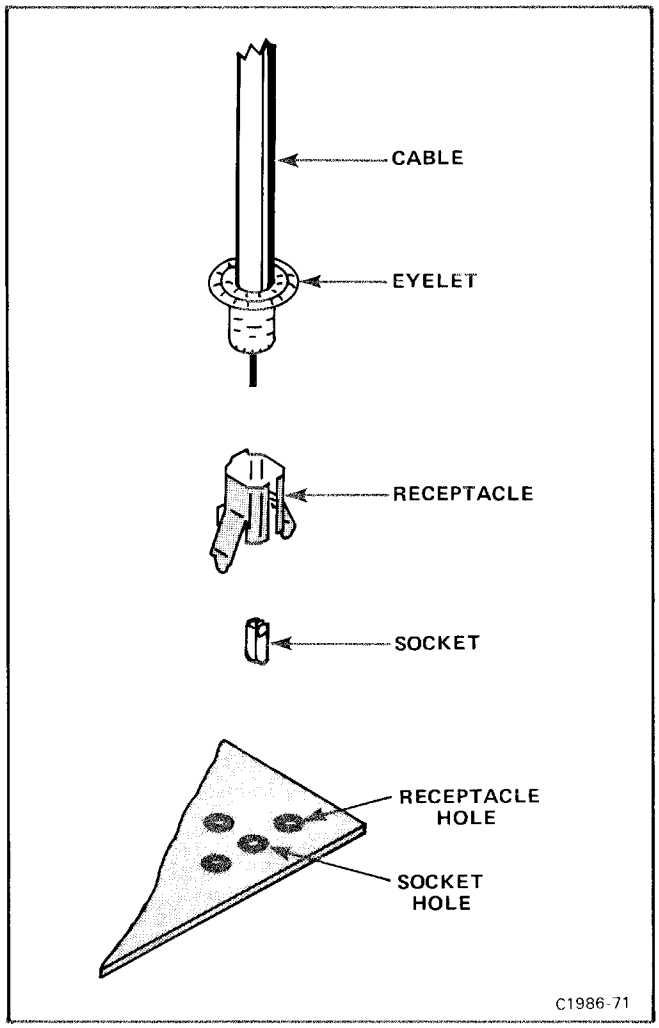

Figure 4-8. Coaxial end-lead connector assembly.

A4-CLOCK CIRCUIT BOARD. To remove the circuit board:

1. Note color of multi-pin connectors (see Fig. 4-4 for identification) and P numbers to which each attach. Disconnect all multi-pin connectors from board.

2. Remove 4 inter-board multi-pin connectors shown in Figure 4-9. See Figure 4-3 for identification.

3. Remove 4 screws that secure circuit board as shown in Figure 4-9.

4. Lift rear of circuit board away from the frame and slide board to the rear until pushbutton switches are clear of front panel.

5. Disconnect coaxial end-lead connector from bottom of board (see Fig. 4-8 for identification). Remove board from instrument.

6. Remove remaining 5 screws to detach aluminium shield.

7. To replace circuit board, reverse order of removal.

A1-INTERFACE CIRCUIT BOARD. To remove circuit board:

1. Remove Trigger and Clock circuit boards using procedures given previously.

2. Set TIME/DIV knob to 2 ms position and VARIABLE TIME/DIV knob to expose the set screw.

3. With hex-key wrench, loosen set screws in both knobs. Remove knobs from shafts.

4. Note color of multi-pin connectors (see Fig 4-4 for identification) and P numbers to which each connect. Disconnect all multi-pin connectors from board.

5. Remove 4 screws that secure gray plastic rear panel to instrument frame.

6. Remove 6 screws that secure perimeter of board to instrument frame

7. Remove Interface circuit board through rear of instrument.

To install the Interface circuit board:

1. Guide TIME/DIV switch shaft through hole in front-panel.

2. Install 6 screws that secure perimeter of board to instrument frame.

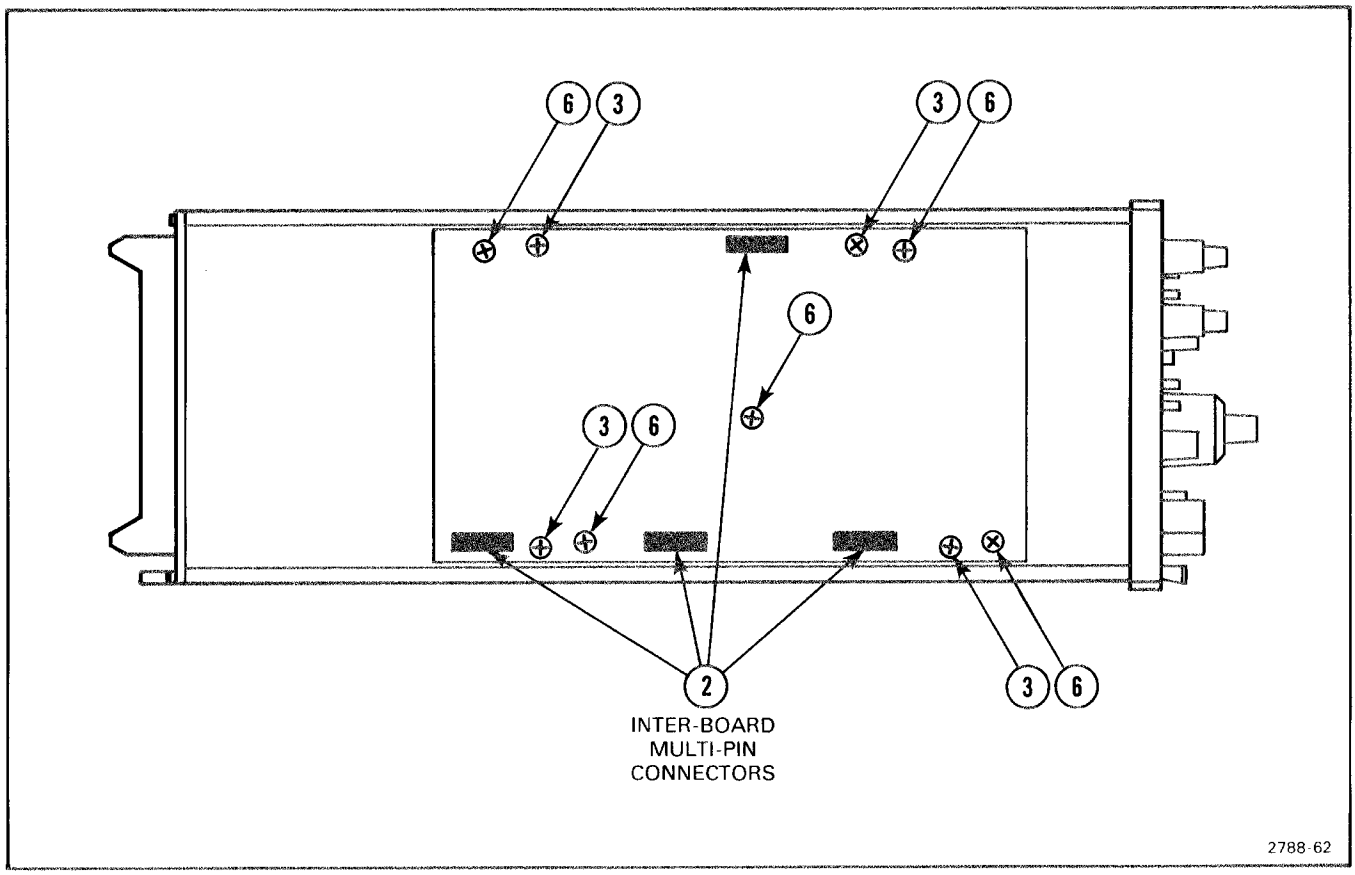

Figure 4-9. Location of securing screws and inter-board multi-pin connectors on clock circuit board.

3. Install gray plastic rear panel with 4 securing screws.

4. Replace TIME/DIV knob on shaft. Align knob index with 2 ms position; then, tighten 2 set screws on knob.

5. Replace VARIABLE knob and tighten set screw.

6. Replace all cables as noted during removal procedure.

7. Replace Trigger and Clock circuit boards.

SWITCHES

Two types of switches are used in this instrument. Contact alignment and spacing are critical to the operation of the pushbutton and cam switches. Therefore, defective switches should either be replaced as a unit or repaired only by personnel experienced with these types of switches. Your local Tektronix Field Office or representative can provide additional repair information. The following special maintenance information is provided for switch replacement.

CAM SWITCHES. Cam switches consist of a rotating cam that mates with contacts on the adjacent circuit board. These contacts are activated by lobes on the cam as the switch is rotated. A cam switch can be disassembled for inspection, cleaning, repair, or replacement; however, it is recommended that the switch be removed and replaced as a unit. Refer to Figure 4-10 for special instructions on cam switch removal.

CAUTION

Repair of a cam switch should be undertaken only by experienced maintenance personnel. Switch alignment and contact spacing must be carefully maintained for proper operation. A cam switch repair kit is available (Tektronix part 040-0541-00) which contains special alignment tools for use in repairing or replacing the switch contacts. For information or assistance on maintenance of cam switches, contact your local Tektronix Field Office or representative.

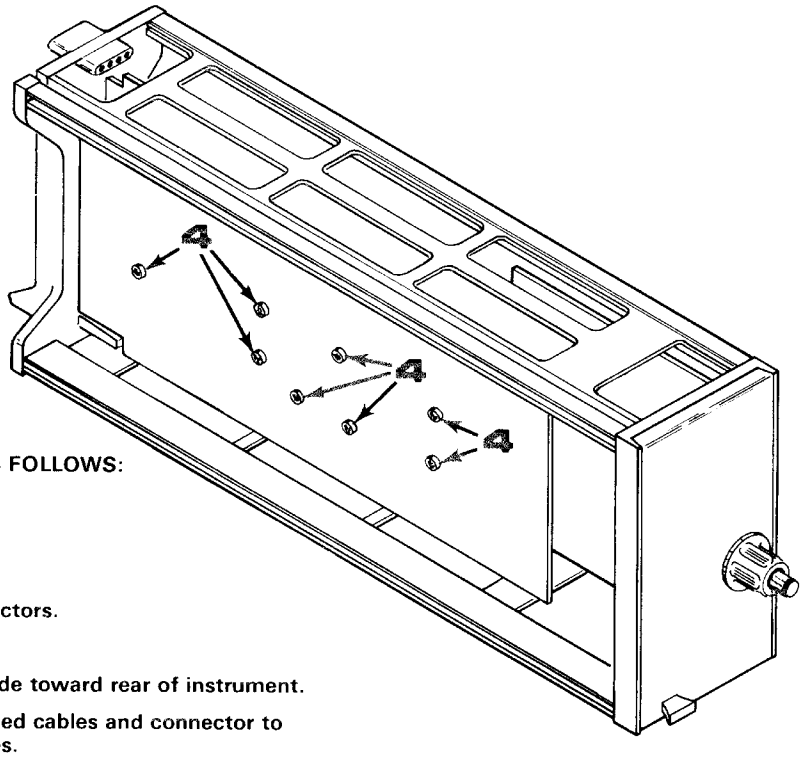

REMOVE CAM-TYPE SWITCH ASSEMBLY AS FOLLOWS:

1. Remove clock circuit board (see procedure in text).

2. Remove Trigger circuit board as follows:
   a. Remove the 3 inter-board multi-pin connectors.
   b. Remove 2 screws from circuit board.
   c. Lift rear of board away from frame and slide toward rear of instrument.
   d. Note wire color of single-conductor shielded cables and connector to which each attach. Then, disconnect cables.

3. Remove the TIME/DIV and VARIABLE (CAL IN) knobs as follows:
   a. Set the TIME/DIV switch to the 2 ms position and the VARIABLE (CAL IN) knob out to expose set screw.
   b. With a hex key wrench loosen the set screws in both knobs. Remove knobs from shaft.

4. Remove 8 screws securing cam-type switch to the Interface circuit board.

5. Disconnect multi-pin connector from Readout circuit board.

To reinstall the cam-type switch, reverse the order of removal.

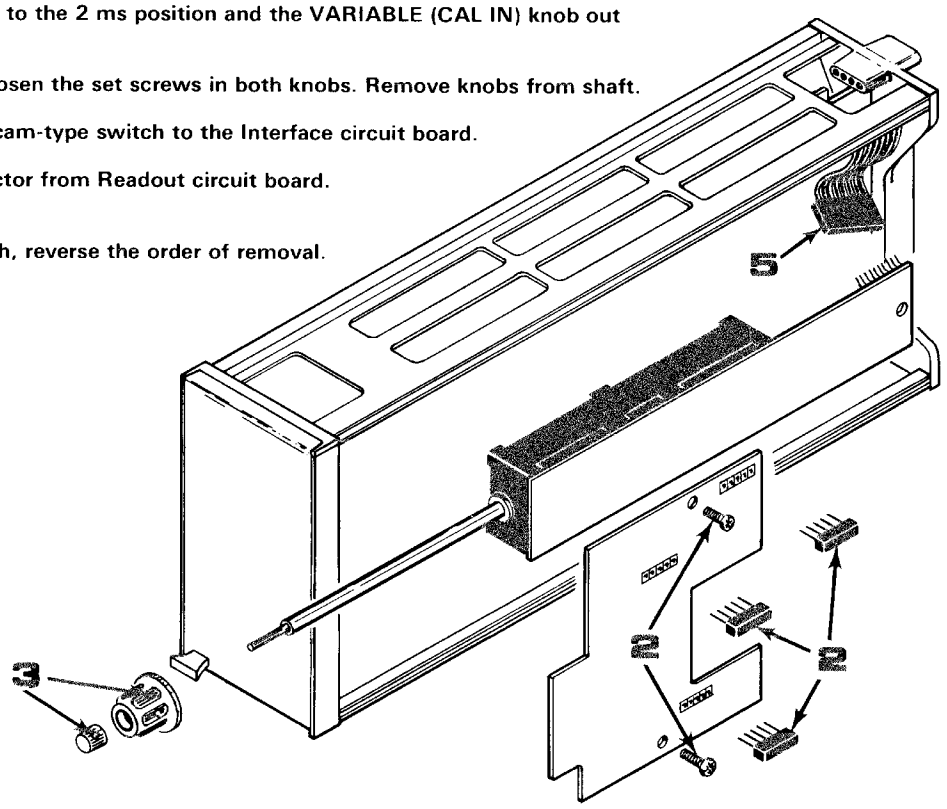

(1986-72)2788-58

Figure 4-10. Cam switch removal procedure.

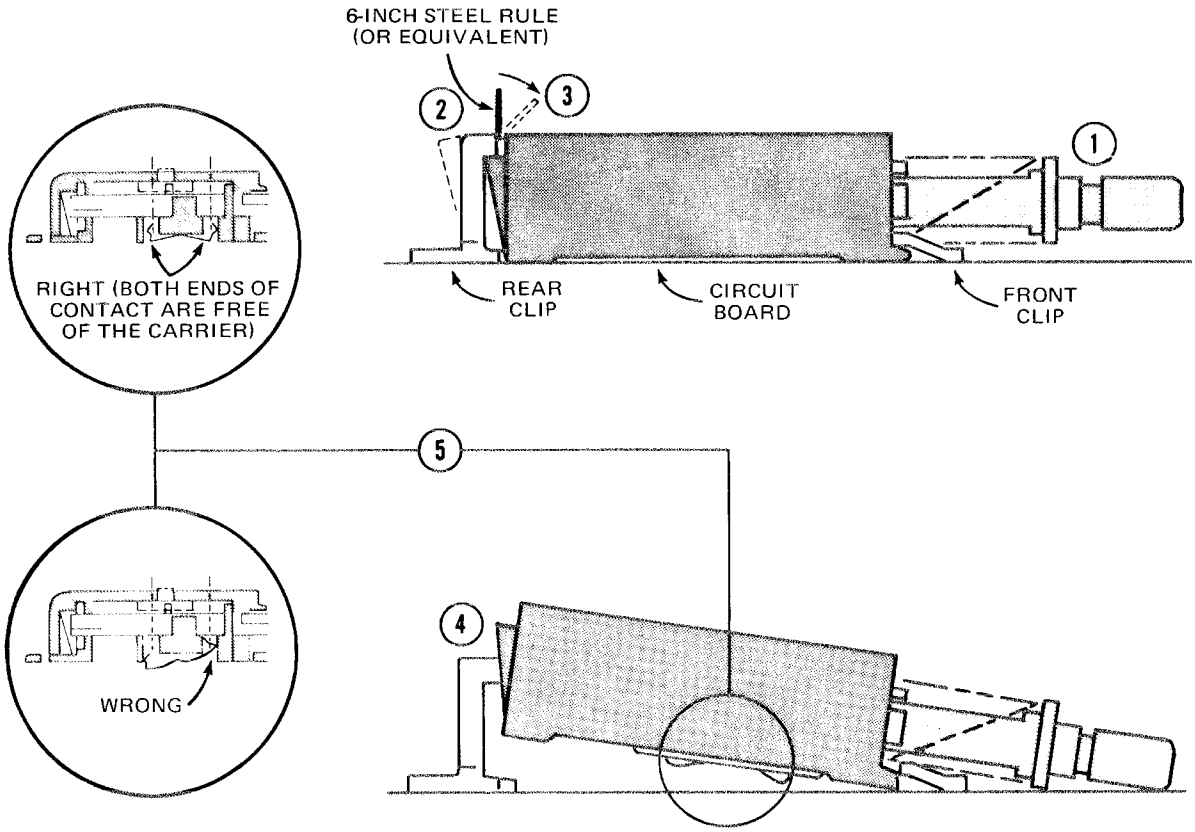

(1) Make sure that all switch shafts are in the OUT position to clear the rear clip.

(2) Place the long edge of a six-inch rule or similar thin straight edge between the top edge of the rear clip and the switch body.

(3) Carefully pry the rear clip back just far enough to push the steel rule down between the clip and switch body.

CAUTION

When the switch is removed, the contacts may drop free and be damaged or lost. Body salts or acids can contaminate the switch contacts. Wear cotton gloves to prevent touching the contacts in the switch or on the board with bare hands.

(4) Pull the rear of the switch up, remove the steel rule, and pull the switch out of the front clip.

(5) To replace the switch, first check that the slide contacts are properly installed in the carrier. Then, place the front of the switch into the front clip and push the rear of the switch down until the rear clip catches and holds the switch in place.

C1967-3

Figure 4-11. Removal procedure for typical pushbutton switch.

PUSHBUTTON SWITCHES. Removal and replacement instructions for pushbutton switches are shown in Figure 4-11.

SEMICONDUCTORS

CAUTION

To avoid component damage, power must be turned off before removing or replacing semiconductors.

Semiconductors should not be replaced unless actually defective. If semiconductors are removed during routine maintenance, return them to their original sockets. Unnecessary replacement of semiconductors may affect the adjustment of this instrument. When semiconductors are replaced, check the operation of that part of the instrument which may be affected.

WARNING

Handle silicone grease with care. Avoid getting silicone grease in eyes. Wash hands throroughly after use.

Replacement devices should be of the original type or a direct replacement. Figure 4-2 shows the lead configurations of the semiconductor devices used in this instrument. Some plastic-case transistors have lead configurations that do not agree with those shown here. When replacing, check the manufacturer's lead configuration diagram. All transistor sockets in this instrument are wired for the standard lead configuration used for metal-case transistors. Semiconductors that have heat radiators use silicone grease to increase heat transfer. Replace the silicone grease when replacing these semiconductors.

An extraction tool should be used to remove the 14- and 16-pin integrated circuits to prevent damage to the pins. This tool is available from Tektronix, Inc. Order Tektronix part 003-0619-00. If an extraction tool is not available when removing one of these integrated circuits, pull slowly and evenly on both ends of the device. Try to avoid having one end of the integrated circuit disengage from the socket before the other, as the pins may be damaged.

INTERCONNECTING PINS

Three methods of interconnection are used to connect the circuit boards with other boards and components. When the interconnection is made with a coaxial cable, a special end-lead connector plugs into a socket on the board (Fig. 4-8). When the interconnection is made with a wire lead, an end-lead connector is used which mates with the interconnecting pin soldered into the board (Fig. 4-4). When the interconnection is made between adjacent boards, an inter-board multi-pin connector is used (Fig. 4-3). The following informaton provides the removal and replacement procedure for the various types of interconnection methods.

COAXIAL END-LEAD CONNECTORS. Replacement of the coaxial-type end-lead connectors requires special tools and techniques; only experienced maintenance personnel should attempt to remove and replace these connectors. It is recommended that the cable be replaced as a unit. For cable part numbers see the Replaceable Mechanical Parts list. An alternative solution is to refer the replacement of the defective connector to your local Tektronix Field Office or representative.

END-LEAD CONNECTORS. The pin connectors used to connect the wires to the interconnecting pins are clamped to the ends of the associated leads. To remove and replace damaged end-lead pin connectors, remove the old pin connector from the end of the lead and clamp the replacement connector to the lead.

Some of the pin connectors are grouped together and mounted in a plastic holder; the overall result is that these connectors are removed and installed as a multi-pin connector (see Fig. 4-4). To provide correct orientation of this multi-pin connector when it is replaced, an arrow is marked on the circuit board and a matching arrow is molded into the plastic holder of the multi-pin connector. Be sure these arrows are aligned as the multi-pin connector is replaced. If the individual end-lead pin connectors are removed from the plastic holder, note the color of the individual wires for replacement.

INTER-BOARD MULTI-PIN CONNECTOR. The inter-board multi-pin connector pin-holder is not repairable and should be replaced as a unit (see Fig. 4-3). Refer to the Replaceable Mechanical Parts list for part number. Inter-board multi-pin connector pin-sockets are soldered to circuit boards (see Fig. 4-3). To replace a socket, first remove the guide. Then, remove the old socket using soldering techniques previously described. Solder the new socket in place, making sure it will align properly with the inter-board connector pins.

CIRCUIT-BOARD PINS

CAUTION

All circuit boards in this instrument, except the Readout circuit board, are multilayer type boards with a conductive path(s) laminated between the top and bottom board layers. All soldering on these boards should be done with extreme care to prevent breaking the connection to the center conductor(s); only experienced maintenance personnel should attempt repair on these boards.

A circuit-board pin replacement kit including the necessary tools, instructions, and replacement pins is available from Tektronix, Inc. Order Tektronix part 040-0542-00. Replacement of circuit-board pins on multi-layer boards is not recommended; refer such repairs to your local Tektronix Field Office or representative.

To replace a damaged pin which is mounted on a single-layer circuit board, first disconnect any pin connectors.

Then (using Soldering Techniques given earlier in this section), unsolder the damaged pin and pull it from the board with a pair of pliers, leaving the ferrule (see Fig. 4-12) in the hole, if possible. If the ferrule remains in the circuit board, remove the spare ferrule from the replacement pin and press the new pin into the hole in the circuit board. If the ferrule is removed with the damaged pin, clean out the hole, using a solder-removing wick and a scribe. Then, press the replacement pin with attached spare ferrule into the hole. Position the replacement pin in the same manner as the damaged pin. Solder the pin to the circuit board on each side of the board. If the old pin was bent at an angle to mate with a connector, carefully bend the new pin to the same angle. Replace the pin connector.

FRONT-PANEL LIGHTS

This instrument uses LED's (light-emitting diodes) and incandescent lamps for front-panel lights.

LED's are used to illuminate the TRIG'D and SINGLE SWP READY lights. To replace LED's, remove the cap from the sleeve as in Figure 4-13. Note lead wire color coding and LED lead configuration. Unsolder wire leads and remove LED from the cap. Solder the replacement LED and lead wires to the socket cap as noted previously. Install the cap in the sleeve.

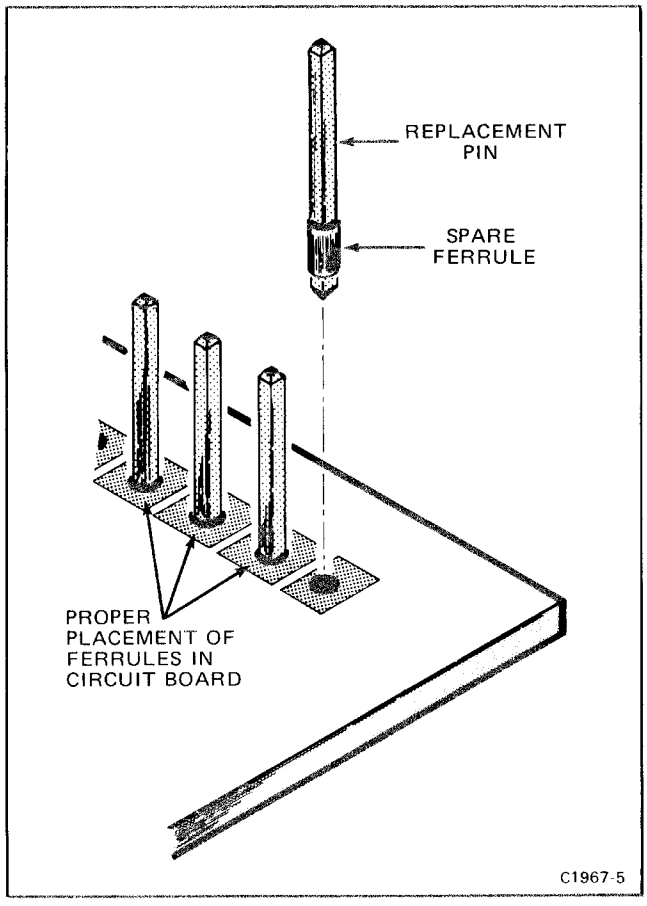

Figure 4-12. Exploded view of circuit-board pin and ferrule.

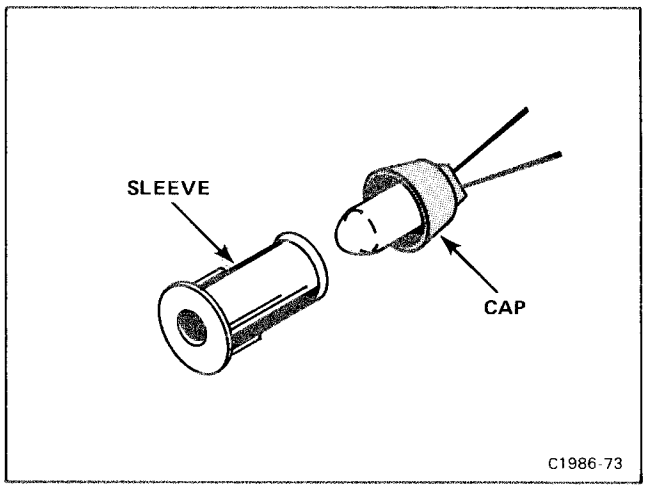

Figure 4-13. Front-panel light socket assembly.

Incandescent lamps are used to illuminate the transparent pushbutton switches. To replace incandescent lamps unsolder the lead wires from the rear of the cap (see Fig. 4-13), pull the cap and bulb out of the sleeve. Solder the replacement lamp and lead wires to the cap. Install the assembly in the sub-panel sleeve.

ADJUSTMENT AFTER REPAIR

After any electrical component has been replaced, the adjustment of that particular circuit should be checked, as well as other closely related circuits. See section 5 for a complete adjustment procedure.

INSTRUMENT REPACKAGING

If the Tektronix instrument is to be shipped to a Tektronix Service Center for service or repair, attach a tag showing: owner (with address) and the name of an individual at your firm that can be contacted, complete instrument serial number and a description of the service required.

Save and re-use the package in which your instrument was shipped. If the original packaging is unfit for use or not available, repackage the instrument as follows:

1. Obtain a corrugated cardboard carton having inside dimensions of no less than six inches more than the instrument dimensions; this will allow for cushioning. The shipping carton test strength for this instrument is 200 lbs.

2. Surround the instrument with polyethylene sheeting to protect the finish of the instrument.

3. Cushion the instrument on all sides by tightly packing dunnage or urethane foam between carton and instrument, allowing three inches on all sides.

4. Seal carton with shipping tape or industrial stapler.

PERFORMANCE CHECK AND ADJUSTMENT

This section contains information necessary to perform a complete instrument performance check and adjustment. Limits given in the procedure are adjustment guides and should not be interpreted as performance requirements unless preceeded by a check mark ✓. Where possible, instrument performance is checked before an adjustment is made.

PRELIMINARY INFORMATION

ADJUSTMENT INTERVAL

To maintain instrument accuracy, check the performance of the 7B87 every 1000 hours of operation, or every 6 months if used infrequently. Before complete adjustment, thoroughly clean and inspect this instrument as outlined in Section 4, Maintenance.

TEKTRONIX FIELD SERVICE

Tektronix Field Service Centers and the Factory Service Center provide instrument repair and adjustment services. Contact your Tektronix Field Office or representative for further information.

USING THIS PROCEDURE

This Performance Check and Adjustment procedure can be used either for complete adjustment or as a check of instrument performance. Completion of each step in the procedure ensures that the instrument is correctly adjusted and operating within specified limits. Refer to the following discussion for instructions on a complete or partial check and adjustment.

Index

An index precedes the procedure to aid in locating Performance Check and Adjustment steps.

Performance Check

Instrument performance can be checked by performing the complete Performance Check and Adjustment procedure and omitting only the ADJUST parts of the steps. A check mark ✓ preceding a CHECK indicates that the limit given is a performance requirement specified in Section 2, Specification.

Adjustment

Completion of each step in the Performance Check and Adjustment procedure ensures that the instrument is correctly adjusted and performing within specified limits. Where possible, instrument performance is checked before an adjustment is made. For best overall performance when performing the complete adjustment procedure, make each adjustment to the exact setting indicated.

Partial Procedures

The following procedure is written to completely check and adjust the instrument to the Performance Requirements listed in Section 2, Specification. If the applications for which the instrument is used do not require the full available performance, the procedures and the required equipment list can be shortened accordingly.

A partial performance check and adjustment may be desirable after replacing components, or to touch up the adjustment of a portion of the instrument. To check or adjust only part of the instrument, refer to the Equipment Required list which precedes that portion of the procedure to be performed. To avoid unnecessary adjustment of other parts, adjust only if the tolerance given in each CHECK is not met.

TEST EQUIPMENT REQUIRED

The test equipment listed in Table 5-1 is required for a complete performance check and adjustment of this instrument. The specifications given in Table 5-1 for test equipment are the minimum required to meet the Performance Requirements listed in Section 2, Specification. Detailed operating instructions for test equipment are omitted in this procedure. Refer to the test equipment instruction manual if more information is needed.

SPECIAL FIXTURES

Special fixtures are used only where they facilitate instrument adjustment. These fixtures are available from Tektronix, Inc. Order by part number from Tektronix Field Offices or representatives.

TEST EQUIPMENT ALTERNATIVES

The test equipment listed in the Examples of Applicable Test Equipment column, Table 5-1, is required to check and adjust this instrument. The Performance Check and Adjustment procedure is based on the first item of equipment given as an example. If other equipment is substituted, control settings or setups may need to be altered. If the exact item of equipment given as an example is not available, refer to the Minimum Specifications column to determine if other equipment may be substituted. Then check the Purpose column. If you determine that your measurement requirements will not be affected, the item and corresponding step(s) can be deleted.

TABLE 5-1
Test Equipment

Description	Minimum Specifications	Purpose	Examples of Applicable Test Equipment
1. Oscilloscope Mainframe	Tektronix 7000-series; bandwidth, 400 MHz with 2 horizontal plug-in compartments.	Provides a display for unit under test.	a. TEKTRONIX 7854 Oscilloscope system.
2. Amplifier Plug-in Units	Tektronix 7A-series; bandwidth, 400 MHz; deflection factor, 10 mV to 0.5 V.	Provides vertical input to oscilloscope mainframe.	a. TEKTRONIX 7A16A Amplifier and 7A19 Amplifier plug-in units.
3. Time-Base Plug-in Unit	Sweep rate, 5 μs/division.	Provides a delayed trace for the Delay Time Accuracy check and adjustments.	a. TEKTRONIX 7B80 Time Base plug-in unit. b. TEKTRONIX 7B85 Delaying Time Base plug-in unit.
4. Test Oscilloscope	Bandwidth, dc to 50 MHz; minimum deflection factor, 1 volt/division; accuracy, within 3%.	Provides a means to check the internal and and external clock signal amplitudes.	a. TEKTRONIX 465 Oscilloscope with P6105 probe.
5. Frequency Counter	Range, 20.00 Hz to 20.48 MHz; accuracy, within 0.02%.	Provides a means to check the internal and external clock frequencies.	a. TEKTRONIX DC 504 Counter/Timer, with power module.
6. Pulse Generator	Frequency, 10 MHz; output, square wave; Amplitude, 5 V (0 to peak) into 100 KΩ.	External clock input check.	a. TEKTRONIX PG 501 Pulse Generator with power module.
7. High-Frequency Signal Generator	Frequency, 400 MHz; output amplitude, variable from 50 mV to 0.5 V into 50 Ω.	High-frequency triggering checks.	a. TEKTRONIX SG 504 Leveled Sine Wave Generator. b. Wavetek 1002 Sweep/Signal Generator.
8. Medium-Frequency Signal Generator	Frequency, 50 MHz; output amplitude range, 50 mV to 125 mV.	Medium-frequency triggering checks.	a. TEKTRONIX SG 503 Leveled Sine Wave Generator.
9. Low-Frequency Sine-Wave Generator	Frequency, 30 Hz to 50 kHz; output amplitude, variable from 50 mV to 3 V into 50 Ω.	Low-frequency triggering checks and adjustments.	a. TEKTRONIX FG 503 Function Generator with power module. b. General Radio 1310-B Oscillator.
10. Time-Mark Generator	Marker outputs, 2 ns to 5 s; accuracy within 0.1%.	Sweep timing checks and adjustments.	a. TEKTRONIX TG 501 Time-Mark Generator with power module. b. TEKTRONIX 2901 Time-Mark Generator. c. TEKTRONIX 184 Time-Mark Generator.

TABLE 5-1 (CONT)
Test Equipment

Description	Minimum Specifications	Purpose	Examples of Applicable Test Equipment
11. Digital Multimeter	Ranges, 200 K and 2 MΩ; accuracy, within 1%.	Special readout encoding check.	a. TEKTRONIX DM 501 Digital Multimeter, with power module.
12. 1X Probe	Compatible with frequency counter being used (see item 5, frequency counter).	Provides signal connection from frequency Counter.	a. TEKTRONIX P6028 probe. b. TEKTRONIX P6101 probe.
13. Plug-In Extender	Tektronix 7000-series extender.	Provides access to internal adjustments and test points.	a. Tektronix Part 067-0589-00 Calibration Fixture.
14. Coaxial Cables (2 required)	Impedance, 50 Ω; type RG 58/U; length, 18 inches; connectors, BNC.	Provides signal interconnections.	a. Tektronix Part 012-0057-01.
15. T Connector	Connectors, BNC.	External trigger and adjustments.	a. Tektronix Part 103-0030-00.
16. Attenuators	2X and 10X; impedance 50 Ω.	Attenuate signals.	a. Tektronix Part 011-0069-02 (2X) Tektronix Part 011-0059-02 (10X).
17. Termination	Impedance, 50 Ω; accuracy, within 2%; connectors, BNC.	Magnified sweep timing check.	a. Tektronix Part 011-0049-01.
18. Screwdriver	3-inch shaft, 3/32-inch bit.	Adjustments.	a. Xcelite R-3323.

INDEX TO PERFORMANCE CHECK AND ADJUSTMENT PROCEDURE

PAGE

A. TRIGGERING SYSTEM
1. Adjust DC Balance and Slope Balance (R85,R80) 5-5
✓ 2. Check Triggering Modes 5-5
✓ 3. Check External Level Range 5-6
4. Adjust Trigger Sensitivity (R49) 5-6
✓ 5. Check External Triggering Sensitivity 5-6
✓ 6. Check Internal Triggering Sensitivity 5-7
✓ 7. Check Internal Trigger Jitter 5-9
✓ 8. Check Line Triggering 5-9

B. HORIZONTAL/AQS SYSTEM
1. Set Basic Sweep Calibration 5-10
✓ 2. Check Sweep Length and Positioning Range 5-10
✓ 3. Check/Adjust Magnifier Gain and Registration (R430,R445) 5-11
✓ 4. Check Variable Time/Division and Variable Hold Off 5-11
5. Adjust 50 ns Sweep Timing (C330) 5-11
✓ 6. Check Internal Clock Frequency Ranges ... 5-11
✓ 7. Check External Clock Input 5-12
8. Adjust Delay Start and Pickoff Bias (R305,R530) 5-12
9. Adjust DVM Zero and Scaling (R550,R538) 5-12
10. Adjust 10 μs and 10 ms Sweep Timing (R710,R715) 5-13
✓ 11. Check Delay Time Accuracy 5-13
✓ 12. Check Sweep Timing 5-14
✓ 13. Check Magnified Sweep Timing 5-14
✓ 14. Check Special Readout Encoding 5-15

PRELIMINARY PROCEDURE

1. Install a 7A16A Amplifier unit in the left vertical compartment, and a 7A19 Amplifier unit in the right vertical compartment of the oscilloscope mainframe.

2. Install the 067-0580-00 plug-in extender in the B horizontal compartment of the mainframe. Remove the side covers and install the 7B87 in the plug-in extender.

3. Set the mainframe vertical mode switch to display the left vertical unit and the horizontal mode switch to display the B horizonal unit. Set the mainframe intensity controls fully counterclockwise and set the trigger source switches to vertical mode.

4. Turn on the mainframe and allow at least 20 minutes warmup before beginning the procedure.

NOTE

The performance of this instrument can be checked at any ambient temperature within the 0° to +50° C range unless stated otherwise. This instrument must be adjusted at an ambient temperature of +20° to +30° C for quoted accuracy.

✓ Performance Requirement check; see introductory information.

A. TRIGGERING SYSTEM

Equipment Required: (Refer to Table 5-1, Test Equipment.)

1. Oscilloscope mainframe.
2. Amplifier plug-in units.
3. Low-frequency sine-wave generator.
4. Medium-frequency signal generator.
5. High-frequency signal generator.
6. Plug-in extender.
7. 50-ohm cables (2).
8. BNC T connector.
9. 2X attenuator.
10. 10X attenuator.

BEFORE YOU BEGIN, see TEST POINT AND ADJUSTMENT LOCATIONS in the Diagrams section.

CONTROL SETTINGS

Set the 7B87 controls as follows:

TRIGGERING

MODE ..... P-P AUTO
COUPLING ..... AC
SOURCE ..... INT

SWEEP

POSITION ..... Midrange
TIME/DIV ..... 20 μs
VARIABLE ..... IN (calibrated)
MAG X1
HOLD OFF ..... MIN

A1. ADJUST DC BALANCE AND SLOPE BALANCE (R85, R80)

a. Connect the low-frequency sine-wave generator to the amplifier unit input with a 50-ohm cable.

b. Set the oscilloscope mainframe intensity and focus controls for the desired display.

c. Set the low-frequency sine-wave generator and the amplifier unit deflection factor for a 0.3-division display at 50 kilohertz. Center the display vertically.

d. Set the TRIGGERING LEVEL control to approximately 0 (midrange) and TRIGGERING SLOPE to (+).

e. Check for a stable display with TRIG'D light on.

f. **ADJUST**—R85 (DC Balance) for a stable crt display.

g. Set the SLOPE switch to (−) and check for a stable display.

h. **ADJUST**—R80 (Slope Balance) for a stable display.

i. Check for a stable display when the SLOPE switch is set to (+) and (−).

j. **INTERACTION**—Repeat the adjustment of R85 (DC Balance) and R80 (Slope Balance) until a stable display is obtained while changing TRIGGERING SLOPE.

NOTE

If any of the CHECK parts in the following steps cannot be met, repeat step A1.

✓ A2. CHECK TRIGGERING MODES

a. Set the low-frequency sine-wave generator and the amplifier unit deflection factor for approximately a 2-division display.

✓ b. **CHECK**—For a stable display at all LEVEL control settings (P-P AUTO MODE).

c. Set the TRIGGERING MODE to AUTO.

✓ Performance Requirement check; see introductory information.

✓ d. **CHECK**—Set the TRIGGERING LEVEL control for a stable display (TRIG'D light on).

✓ e. **CHECK**—For a free-running display with TRIG'D light off when the TRIGGERING LEVEL control is set fully clockwise and fully counterclockwise.

f. Set the TRIGGERING MODE to NORM.

✓ g. **CHECK**—Set the TRIGGERING LEVEL control for a stable display (TRIG'D light on).

✓ h. **CHECK**—For no display (TRIG'D light off) when the TRIGGERING LEVEL control is set fully clockwise and fully counterclockwise.

i. Set the TRIGGERING LEVEL control for a stable display (TRIG'D light on).

j. Set the TRIGGERING MODE to SINGLE SWP and the SOURCE to EXT.

✓ k. **CHECK**—Press the SINGLE SWP RESET pushbutton and check that the READY light is on.

✓ l. **CHECK**—Rotate the oscilloscope intensity control clockwise slightly and check for one sweep and that the READY light is out after completion of that sweep when the INT SOURCE push button is pressed.

m. Remove signal connection.

✓ A3. CHECK EXTERNAL LEVEL RANGE

a. Connect the low-frequency sine-wave generator to the EXT TRIG IN connector with a 42-inch 50-ohm cable and T connector. Connect the output of the T Connector to the amplifier unit input with an 18-inch 50-ohm cable.

b. Set the TRIGGERING MODE to AUTO, SLOPE to (+), and SOURCE to EXT. SET the TIME/DIV switch to 0.5 ms and the EXT TRIG IN attenuator to IN ÷ 1.

c. Set the amplifier unit deflection factor for 0.5 volts/division. Set the low-frequency sine-wave generator for a 6-division display (3 volts) at 1 kilohertz.

✓ d. **CHECK**—That all levels of the positive slope may be selected for the sweep starting point as the TRIGGERING LEVEL control is rotated throughout its range (indicates an external level range of at least plus and minus 1.5 volts). Check that the display is not triggered at either end of the LEVEL control rotation.

✓ e. **CHECK**—Change the TRIGGERING LEVEL to (−) and repeat part d for the negative slope of the waveform.

A4. ADJUST TRIGGERING SENSITIVITY (R49)

a. Set the TRIGGERING LEVEL control to 0. Set the TRIGGERING MODE to NORM, and SOURCE to INT.

b. Set the amplifier unit deflection factor to 50 millivolts/division. Set the low-frequency sine-wave generator for a 5-division display (250 millivolts) at 1 kilohertz.

c. Set the amplifier unit deflection factor to 1 volt/division (0.25 division). Set the TRIGGERING LEVEL control for a stable display.

d. **ADJUST**—R49 (Trigger Sensitivity) for a stable crt display.

e. Set the amplifier unit deflection factor to 2 volts/division (0.125 division). Set the TRIGGERING LEVEL control for a stable display (stable display may not be possible).

f. **ADJUST**—R49 (Trigger Sensitivity) to a setting that provides a visible trace, but the display remains unstable.

g. Repeat part c of this step.

h. Set the amplifier unit deflection factor to 5 volts/division (0.05 division).

✓ i. **CHECK**—rotate the TRIGGERING LEVEL control throughout its range and check for no trace (one displayed sweep will occur when control passes the midrange point).

✓ A5. CHECK EXTERNAL TRIGGERING SENSITIVITY

a. Remove the 7B87 and plug-in extender; then install the 7B87 directly into the B horizontal compartment. Set the amplifier unit deflection factor for 10 millivolts/division. Set the low-frequency sine-wave generator for a 5-division display (50 millivolts) at 30 hertz.

b. Set TRIGGERING SLOPE to (+) MODE to NORM, TIME/DIV to 20 ms, and set the LEVEL control for a stable display.

✓ c. **CHECK**—Set the TRIGGERING MODE to AUTO and check for a stable display (TRIG'D light on) with the COUPLING pushbutton set to:

1. AC
2. AC HF REJ
3. DC

(Set TRIGGERING LEVEL control as necessary).

✓ Performance Requirement check; see introductory information.

✓ d. **CHECK**—Change the TRIGGERING SLOPE to (−) and repeat part c.

e. Set the TRIGGERING MODE to P-P AUTO and COUPLING to AC.

f. Set the amplifier unit deflection factor for 0.1 volt/division and the low-frequency sine-wave generator for a 5-division display (500 millivolts) at 50 hertz.

✓ g. **CHECK**—For a stable display (TRIG'D light on) at all settings of the LEVEL control with COUPLING set to:

1. AC
2. DC

✓ h. **CHECK**—Set the SLOPE to (+) and repeat part g.

i. Set the amplifier unit deflection factor for 50 millivolts/division and the low-frequency sine-wave generator for a 2.5-division display (125 millivolts) at 200 hertz. Set the TIME/DIV switch to 5 ms.

✓ j. **CHECK**—Repeat part g for both the (+) and (−) SLOPE.

k. Disconnect the low-frequency sine-wave generator from the T connector and connect the medium-frequency signal generator to the T connector.

l. Set the TRIGGERING MODE to AUTO and the SLOPE to (+). Set the TIME/DIV switch to 20 ns.

m. Set the amplifier unit deflection factor to 10 millivolts/division and the medium-frequency signal generator for a 5 division display (50 millivolts) at 50 megahertz.

✓ n. **CHECK**—For a stable display (TRIG'D light on) with the COUPLING switch set to:

1. AC
2. AC LF REJ
3. DC

(Set the TRIGGERING LEVEL control as necessary.)

✓ o. **CHECK**—Set the SLOPE switch to (−) and repeat part n.

p. Set the amplifier unit deflection factor to 50 millivolts/division and set the medium-frequency signal generator for a 2.5-division display (125 millivolts).

✓ q. **CHECK**—Set the TRIGGERING MODE to P-P AUTO and check for a stable display (TRIG'D light on) at all settings of the LEVEL control with the COUPLING switch set to:

1. AC
2. DC

✓ r. **CHECK**—Set the SLOPE to (+) and repeat part q.

s. Disconnect the medium-frequency sine-wave generator and T-connector from the left vertical plug-in unit. Connect the high-frequency signal generator through the T-connector to the right vertical plug-in unit.

t. Set the mainframe vertical mode switch to display the right vertical plug-in unit.

u. Set the high-frequency signal generator for a 7.5-division display (375 millivolts) at 400 megahertz. Set the TIME/DIV switch to 10 ns and the MAG switch to X10.

✓ v. **CHECK**—Set the TRIGGERING MODE to P-P AUTO and check for a stable display (TRIG'D light on) when the LEVEL control setting is within the ends of the arrows on the front panel. Repeat for both the (+) and (−) SLOPE.

w. Set the high-frequency signal generator for a 5-division display (250 millivolts) at 400 megahertz. Set the TRIGGERING MODE to AUTO and the SLOPE to (+).

✓ x. **CHECK**—For a stable display (TRIG'D light on) with the COUPLING switch set to:

1. AC
2. AC LF REJ
3. DC

(Set TRIGGERING LEVEL control as necessary.)

✓ y. **CHECK**—Set the SLOPE to (−) and repeat part x.

✓ A6. CHECK INTERNAL TRIGGERING SENSITIVITY

a. Remove all signal connections, then connect the low-frequency sine-wave generator to the amplifier unit input.

b. Set the TIME/DIV switch to 20 ms and the MAG switch to X1.

✓ **Performance Requirement check; see introductory information.**

c. Set the low-frequency sine-wave generator and the amplifier unit deflection factor for a 0.3-division display at 30 hertz.

d. Set TRIGGERING for (+) SLOPE, NORM MODE, AC COUPLING, INT SOURCE, and set the LEVEL control for a stable display (TRIG'D light on).

✓ e. **CHECK**—Set the TRIGGERING MODE to AUTO and check for a stable display (TRIG'D light on) with the COUPLING switch set to:

1. AC
2. AC HF REJ
3. DC

(Set TRIGGERING LEVEL control as necessary.)

✓ f. **CHECK**—Change the TRIGGERING SLOPE to (-) and repeat part e.

g. Set the TRIGGERING MODE to P-P AUTO and COUPLING to AC.

h. Set the low-frequency sine-wave generator and the amplifier unit deflection factor for a 2-division display at 50 hertz.

✓ i. **CHECK**—For a stable display (TRIG'D light on) at all settings of the LEVEL control with the COUPLING switch set to:

1. AC
2. DC

✓ j. **CHECK**—Set the SLOPE to (+) and repeat part i.

k. Set the low-frequency sine-wave generator and the amplifier unit deflection factor for a 0.5-division display at 200 hertz. Set the TIME/DIV switch to 5 ms.

✓ l. **CHECK**—Repeat part i for both the (+) and (-) SLOPE.

m. Disconnect the low-frequency sine-wave generator and connect the medium-frequency signal generator to the amplifier unit input.

n. Set the TRIGGERING MODE to AUTO and the SLOPE to (+). Set the TIME/DIV switch to 20 ns.

o. Set the medium-frequency signal generator and the amplifier unit deflection factor for a 0.3-division display at 50 megahertz.

✓ p. **CHECK**—For a stable display (TRIG'D light on) with the COUPLING switch set to:

1. AC
2. AC LF REJ
3. DC

(Set TRIGGERING LEVEL control as necessary.)

✓ q. **CHECK**—Set the SLOPE to (-) and repeat part p.

r. Set the medium-frequency signal generator and the amplifier unit deflection factor for a 0.5 division display.

✓ s. **CHECK**—Set the TRIGGERING MODE to P-P AUTO and check for a stable display at all settings of the LEVEL control (TRIG'D light on) with the COUPLING switch set to:

1. AC
2. DC

✓ t. **CHECK**—Set the SLOPE to (+) and repeat part s.

u. Disconnect the medium-frequency sine-wave generator and connect the high-frequency signal generator to the amplifier unit input.

v. Set the high-frequency signal generator and the amplifier unit deflection factor for a 1.5-division display at 400 megahertz. Set the TIME/DIV switch to 10 ns and the MAG switch to X10.

✓ w. **CHECK**—Set the TRIGGERING MODE to P-P AUTO and check for a stable display (TRIG'D light on) when the LEVEL control setting is within the ends of the arrows on the front panel. Repeat for both the (+) and (-) SLOPE.

x. Set the TRIGGERING MODE to AUTO and SLOPE to (+).

✓ y. **CHECK**—For a stable display (TRIG'D light on) with the COUPLING switch set to:

1. AC
2. AC LF REJ
3. DC

(Set TRIGGERING LEVEL control as necessary.)

✓ z. **CHECK**—Set the SLOPE to (-) and repeat part y.

✓ Performance Requirement check; see introductory information.

@

✓ A7. CHECK INTERNAL TRIGGER JITTER

a. Set TRIGGERING COUPLING to AC and set the LEVEL control for a stable display (TRIG'D light on).

✓ b. **CHECK**—For a stable display with no more than 0.1 division (0.1 nanosecond) of jitter.

✓ A8. CHECK LINE TRIGGERING

a. Remove all signal connections.

b. Set the TRIGGERING SOURCE to LINE, the TIME/DIV switch to 1 ms, and the MAG switch to X1.

✓ c. **CHECK**—Set the TRIGGERING LEVEL to approximately midrange and check that the TRIG'D light is on.

✓ d. **CHECK**—That the display is not triggered (TRIG'D light off) at either end of the LEVEL control rotation.

✓ Performance Requirement check; see introductory information.

B. HORIZONTAL/AOS SYSTEM

Equipment Required: (Refer to Table 5-1, Test Equipment.)

1. Oscilloscope mainframe.
2. Test oscilloscope.
3. Amplifier plug-in units.
4. Time-base plug-in unit.
5. Time-mark generator.
6. Frequency counter.
7. Pulse generator.
8. Digital multimeter.
9. Plug-in extender.
10. 1X probe.
11. 50-ohm cables (2).
12. 50-ohm termination.

BEFORE YOU BEGIN, see TEST POINT AND ADJUSTMENT LOCATIONS in the Diagrams section.

CONTROL SETTINGS

Set the 7B87 controls as follows:

TRIGGERING

MODE ..... AUTO
SLOPE ..... +
COUPLING ..... AC
SOURCE ..... INT

SWEEP

POSITION ..... Midrange
TIME/DIV ..... 1 ms
VARIABLE ..... IN (calibrated)
MAG X1
HOLD OFF ..... MIN

B1. SET BASIC SWEEP CALIBRATION

a. Remove the 7B87 from the oscilloscope mainframe and install the plug-in extender in the A horizontal compartment. Then, install the 7B87 in the plug-in extender. Install a time base in the B horizontal compartment. Set the horizontal mode switch to display the A horizontal plug-in compartment.

b. Connect the time-mark generator to the amplifier unit input with a 50-ohm cable. Set the time-mark generator for 1-millisecond markers. Set the mainframe intensity and focus for the desired display.

c. Set the LEVEL control for a stable display (TRIG'D light on). Set the amplifier unit for approximately a 2-division display centered vertically on the graticule.

d. Set the front-panel SWP CAL adjustment for exactly 1 marker/ division over the center 8 divisions (position as necessary).

✓ B2. CHECK SWEEP LENGTH AND POSITIONING RANGE

a. Horizontally position the display to place the second time marker to the first graticule line.

✓ b. **CHECK**—That the end of sweep is beyond 9.2 graticule divisions (indicates sweep length of at least 10.2 divisions).

c. Set the POSITION and FINE controls fully clockwise.

✓ d. **CHECK**—The start of sweep must be to the right of graticule center.

e. Set the POSITION and FINE controls fully counterclockwise.

✓ f. **CHECK**—The end of sweep must be to the left of graticule center.

✓ Performance Requirement check; see introductory information.

@

✓ B3. CHECK/ADJUST MAGNIFIER GAIN AND REGISTRATION (R430,R445)

a. Set the time-mark generator for 0.1-millisecond markers.

b. Set the MAG switch to X10 and set the POSITION controls to midrange. Set the mainframe intensity controls for the desired display.

c. Check for 1 marker/division over the center 8 divisions of display (position as necessary).

d. **ADJUST**—R430 (Mag Gain) for 1 marker/division over the center 8 divisions of display.

e. Set the time-mark generator for 0.5-millisecond markers. Align the center time marker with graticule center.

✓ f. **CHECK**—Set the MAG switch to X1 and check that the center time marker is at graticule center within 0.5 division.

g. **ADJUST**—R445 (Mag Reg) to align the center time marker with graticule center.

h. **INTERACTION**—Set the MAG switch to X10 and repeat parts e, f, and g as necessary.

✓ B4. CHECK VARIABLE TIME/DIVISION AND VARIABLE HOLD OFF

a. Press and release the VARIABLE TIME/DIV control for uncalibrated sweep rates. Set the VARIABLE control fully clockwise and note 3 time markers in 10 graticule divisions.

✓ b. **CHECK**—Set the VARIABLE control fully counterclockwise and check for 2 divisions or less between 5-millisecond markers.

c. Press the VARIABLE control in for calibrated sweep rates.

d. Set the LEVEL control for a free-running display (TRIG'D light off).

e. Set the HOLD OFF control fully counterclockwise.

✓ f. **CHECK**—Rotate the HOLD OFF control slowly clockwise throughout its range and check that the display (3 time markers in 10 divisions) will stabalize at least 3 times throughout the range of the HOLD OFF control (disregard any slow drift).

g. Set the HOLD OFF control counterclockwise to MIN and set the LEVEL control for a stable display.

✓ Performance Requirement check; see introductory information.

B5. ADJUST 50 ns SWEEP TIMING (C330)

a. Set the TIME/DIV switch to 50 ns and set the time mark generator for 50-nanosecond markers.

b. Check for 1 marker/division over the center 8 divisions of display (position as necessary).

c. **ADJUST**—C330 (50 ns Timing) for 1 marker/division over the center 8 divisions of display (position as necessary).

✓ B6. CHECK INTERNAL CLOCK FREQUENCY RANGES

a. Set the 7B87 TIME/DIV switch to 10 μs.

b. Connect the frequency counter 1X probe tip to TP673 and the ground lead to the GND test point.

✓ c. **CHECK**—That the clock frequency is 10.240 MHz, within the limits of 10.230 to 10.250 MHz. Check that the repetition rate output for each TIME/DIV switch setting is approximately the same as that shown in Table 5-2.

d. Set the AQS CLOCK/AQR switch to INT ÷ 1000, the TIME/DIV switch to 50 μs, and the MAG switch to X1 (in).

TABLE 5-2
Acquire Clock Repetition Rate Output

TIME/DIV Setting	MAG X1 (Button In)	MAG X10 (Button Out)
10 μs	10.24 MHz	—
20 μs	5.12 MHz	—
50 μs	2.048 MHz	20.48 MHz
.1 ms	1.024 MHz	10.24 MHz
.2 ms	512.0 kHz	5.12 MHz
.5 ms	204.8 kHz	2.048 MHz
1 ms	102.4 kHz	1.024 MHz
2 ms	51.2 kHz	512.0 kHz
5 ms	20.48 kHz	204.8 kHz
10 ms	10.24 kHz	102.4 kHz
20 ms	5.12 kHz	51.2 kHz
50 ms	2.048 kHz	20.48 kHz
.1 s	1.024 kHz	10.24 kHz
.2 s	512.0 Hz	5.12 kHz
.5 s	204.8 Hz	2.048 kHz
1 s	102.4 Hz	1.024 kHz
2 s	51.2 Hz	512.0 Hz
5 s	20.48 Hz	204.8 Hz

✓ e. **CHECK**—That the repetition rate is 2.048 kHz, within the limits of 2.045 to 2.050 kHz.

✓ B7. CHECK EXTERNAL CLOCK INPUT

a. Set the AQS CLOCK/AQR switch to EXT/AQR.

b. Connect a +5 volt (0 to peak), 10 MHz signal from the pulse generator to the 7B87 EXT CLOCK IN connector. The frequency counter probe and ground lead must remain on TP673 and TP644.

✓ c. **CHECK**—That the external clock output repetition rate is 10 MHz.

B8. ADJUST DELAY START AND PICKOFF BIAS (R305, R530)

a. Set the B horizontal time-base unit time/div switch to 5 μs/div, and the triggering to + slope, auto, ac , int. Set the AQS CLOCK/AQR switch to INT ÷ 1000, and the TIME/DIV switch to 1 ms.

b. Connect the time-mark generator to the amplifier unit input with a 50-ohm cable. Set the time-mark generator to display 0.2 millisecond markers with an amplitude of about 1-division. Align every fifth marker with the vertical graticule lines using the 7B87 POSITION control.

c. Set the mainframe horizontal mode to alternate, and adjust the intensity and focus for the desired display.

d. Position the start of the B horizontal trace to the left graticule edge. Rotate the ACQUIRE-STOP DELAY control fully counterclockwise.

e. Check that the intensified zone is on the second time marker, and the rising edge of the delayed sweep marker is at the start of the delayed sweep trace.

f. **ADJUST**—R305 (Delay Start) to position the intensified zone to the 2nd time marker on the delaying sweep trace and the rising edge of the delayed sweep marker to the start of the delayed sweep trace.

g. Rotate the ACQUIRE-STOP DELAY control fully clockwise.

h. Set the time-mark generator for 1 millisecond markers.

i. Check that the intensified zone is on the 11th time marker.

j. **ADJUST**—R530 (Pickoff Bias) to position the intensified zone to the 11th marker and the rising edge of the delayed sweep marker to 5 divisions (25 μs) from the start of the delayed sweep.

k. **INTERACTION**—Repeat parts b through j until the intensified zone is on the 2nd (0.2 ms) and 11th (1 ms) markers when the ACQUIRE-STOP DELAY is rotated fully counterclockwise and fully clockwise.

B9. ADJUST DVM ZERO AND SCALING (R550, R538)

a. Set the ACQUIRE-STOP DELAY control fully counterclockwise.

b. Check that the channel 2 readout indicates 0.200 ms.

c. **ADJUST**—R550 (DVM Zero) for a channel 2 readout display of exactly 0.200 ms.

d. Rotate the ACQUIRE-STOP DELAY control fully clockwise.

e. Check that the channel 2 readout indicates 9.995 ms.

f. **ADJUST**—R538 (Scaling) for a channel 2 readout of exactly 9.995 ms.

g. **INTERACTION**—Repeat parts a through f until the channel 2 readout indicates 0.200 ms (ACQUIRE-STOP DELAY control fully counterclockwise), and 9.995 ms (ACQUIRE-STOP control fully clockwise).

h. Rotate the ACQUIRE-STOP DELAY control to position the instensified zone on the 2nd time marker and position horizontally the rising edge of the delayed time marker (reference point) to the first graticule line.

i. Progressively check each time marker using the above reference point and note the readout count display as shown in Table 5-3.

TABLE 5-3
Delay Time Linearity

Marker	Readout Count	Within
2	1.000	0.990-1.010
3	2.000	1.985-2.015
4	3.000	2.980-3.020
5	4.000	3.975-4.025
6	5.000	4.970-5.030
7	6.000	5.975-6.025
8	7.000	6.980-7.020
9	8.000	7.985-8.015
10	9.000	8.990-9.010

✓ Performance Requirement check; see introductory information.

B10. ADJUST 10 μs AND 10 ms SWEEP TIMING (R710, R715)

NOTE

The 50 ns timing has been previously checked or adjusted in step B5.

a. Set the time mark generator for 10 μs time markers.

b. Set the TIME/DIV switch to 10 μs, and the delayed time base sweep rate for 50 ns.

c. Rotate the ACQUIRE-STOP DELAY control for a channel 2 readout of approximately 9.7 μs; further adjust the control to align the rising portion of the delayed sweep marker with the center vertical graticule line. Note the exact channel 2 readout value and add 80.00 to that amount.

d. Rotate the ACQUIRE-STOP DELAY control clockwise to the amount calculated in part c.

e. **ADJUST**—R710 (10 μs Timing) to align the rising portion of the delayed sweep marker with the center vertical graticule line.

f. **INTERACTION**—Repeat parts c through e until interaction is eliminated.

g. Set the time mark generator for 10 ms markers.

h. Set the TIME/DIV switch to 10 ms, the delayed time base sweep rate to 50 μs/div, and the oscilloscope mainframe horizontal mode to chop.

i. Rotate the ACQUIRE-STOP DELAY control to display a channel 2 readout of approximately 9.7 ms; further adjust the control to align the rising portion of the delayed sweep marker with the center vertical graticule line. Note the exact channel 2 readout value and add 80.000 to that amount.

j. Rotate the ACQUIRE-STOP DELAY control clockwise to the amount calculated in part i.

k. **ADJUST**—R715 (10 ms Timing) to align the rising portion of the delayed sweep marker with the center vertical graticule line.

l. **INTERACTION**—Repeat parts i through k until interaction is eliminated.

✓ B11. CHECK DELAY TIME ACCURACY

a. Remove the 7B87 and plug-in extender from the A horizontal compartment. Then, install the 7B87 directly in the A horizontal compartment.

TABLE 5-4
Acquire-Stop Delay Accuracy

7B87 TIME/DIV	7B80 Time Base Sweep Rate	Time Mark Generator	Channel 2 Readout Display		
			2nd Delayed Time Marker	10th Delayed Time Marker	Differential Time Delay
10 μs	.1 μs	10 μs	9.45-10.55	89.10-90.90	79.57-80.43
20 μs	.2 μs	20 μs	18.9-21.1	178.2-181.8	158.9-161.1
50 μs	.5 μs	50 μs	47.2-52.8	445.5-454.5	397.7-402.3
.1 ms	1 μs	.1 ms	94.5-105.5	891.0-909.0	795.7-804.3
.2 ms	2 μs	.2 ms	0.189-0.211	1.782-1.818	1.589-1.611
.5 ms	5 μs	.5 ms	0.472-0.528	4.455-4.545	3.977-4.023
1 ms	10 μs	1 ms	0.945-1.055	8.910-9.090	7.957-8.043
2 ms	20 μs	2 ms	1.89-2.11	17.82-18.18	15.89-16.11
5 ms	50 μs	5 ms	4.72-5.28	44.55-45.45	39.77-40.23
10 ms	.1 ms	10 ms	9.45-10.55	89.10-90.90	79.57-80.43
20 ms	.2 ms	20 ms	18.9-21.1	178.2-181.8	158.9-161.1
50 ms	.5 ms	50 ms	47.2-52.8	445.5-454.5	397.7-402.3
.1 s	1 ms	.1 s	94.5-105.5	891.0-909.0	795.7-804.3
.2 s	2 ms	.2 s	0.189-0.211	1.782-1.818	1.589-1.611
.5 s	5 ms	.5 s	0.472-0.528	4.455-4.545	3.977-4.023

✓ Performance Requirement check; see introductory information.

b. Set the time-mark generator for 10 μs markers. Set the TIME/DIV switch to 10 μs and the companion time-base unit for a 0.1 μs/division sweep rate (unmagnified).

c. Position the display for 1 marker/division over the center 8 divisions of intensified display.

d. Position the start of the delayed sweep to the left graticule edge. Then set the ACQUIRE-STOP DELAY control to start the first intensified zone on the second time marker, and the rising portion of the delayed time marker to the start of the delayed sweep.

✓ e. **CHECK**—That the channel 2 readout indicates 10.00 μs within 09.45 to 10.55 μs.

f. Rotate the ACQUIRE-STOP DELAY control to position the intensified zone on the 10th marker and the rising portion of the delayed time marker to the start of the delayed sweep.

✓ g. **CHECK**—That the channel 2 readout indicates 90.00 μs within 89.10 to 90.90 μs.

✓ h. **CHECK**—Follow the procedure outlined in parts c through g and check the ACQUIRE-STOP DELAY accuracy as given in Table 5-4.

✓ B12. CHECK SWEEP TIMING

NOTE

The tolerances given in Table 5-5 are for an ambient temperature range of +15° to +35° C. If outside this range, see the Specification section for applicable tolerances.

a. Remove the 7B87 and plug-in extender from the mainframe; then install the 7B87 directly into the B horizontal compartment.

b. Set the POSITION controls to midrange and TRIGGERING MODE to NORM.

✓ c. **CHECK**—Using the TIME/DIV setting and time-mark generator settings from Table 5-5, check sweep accuracy for 1 time mark/division over the center 8 divisions within the tolerance given in Table 5-5. Set the POSITION controls and TRIGGERING LEVEL control as necessary for a stable display aligned with the vertical graticule lines.

NOTE

If the time-mark generator used does not have 1-2-5 sequence markers, apply 1 unit markers in place of 2 unit markers and check for 2 markers/division, over the center eight divisions of display, to the tolerances given in Table 5-5.

TABLE 5-5
Sweep Timing

TIME/DIV	Time Markers	Tolerance (+15° to +35° C)
10 ns	10 ns	Within 0.2 div
20 ns	20 ns	Within 0.2 div
50 ns	50 ns	Within 0.2 div
.1 μs	.1 μs	Within 0.12 div
.2 μs	.2 μs	Within 0.12 div
.5 μs	.5 μs	Within 0.12 div
1 μs	1 μs	Within 0.12 div
2 μs	2 μs	Within 0.12 div
5 μs	5 μs	Within 0.12 div
10 μs	10 μs	Within 0.12 div
20 μs	20 μs	Within 0.12 div
50 μs	50 μs	Within 0.12 div
.1 ms	.1 ms	Within 0.12 div
.2 ms	.2 ms	Within 0.12 div
.5 ms	.5 ms	Within 0.12 div
1 ms	1 ms	Within 0.12 div
2 ms	2 ms	Within 0.12 div
5 ms	5 ms	Within 0.12 div
10 ms	10 ms	Within 0.12 div
20 ms	20 ms	Within 0.12 div
50 ms	50 ms	Within 0.12 div
.1 s	.1 s	Within 0.12 div
.2 s	.2 s	Within 0.12 div
.5 s	.5 s	Within 0.12 div
1 s	1 s	Within 0.32 div
2 s	2 s	Within 0.32 div
5 s	5 s	Within 0.32 div

✓ B13. CHECK MAGNIFIED SWEEP TIMING

NOTE

The tolerances in Table 5-6 are for an ambient temperature range of +15° to +35° C. If outside this range, see the Specification section for applicable tolerances.

a. Center the display horizontally on the graticule. Set the MAG switch to X10 and the SOURCE switch to EXT.

b. Connect the time-mark generator trigger output to the EXT TRIG IN connector with a 50-ohm cable and 50-ohm termination.

✓ Performance Requirement check; see introductory information.

TABLE 5-6
Magnified Sweep Timing

TIME/DIV	Time Markers	Tolerance (+15° to 35° C)
10 ns	2 ns	[1]Within 0.32 div
20 ns	2 ns	Within 0.32 div
50 ns	5 ns	Within 0.32 div
.1 μs	10 ns	Within 0.2 div
.2 μs	20 ns	Within 0.2 div
.5 μs	50 ns	Within 0.2 div
1 μs	.1 μs	Within 0.2 div
2 μs	.2 μs	Within 0.2 div
5 μs	.5 μs	Within 0.2 div
10 μs	1 μs	Within 0.2 div
20 μs	2 μs	Within 0.2 div
50 μs	5 μs	Within 0.2 div
.1 ms	10 μs	Within 0.2 div
.2 ms	20 μs	Within 0.2 div
.5 ms	50 μs	Within 0.2 div
1 ms	.1 ms	Within 0.2 div
2 ms	.2 ms	Within 0.2 div
5 ms	.5 ms	Within 0.2 div
10 ms	1 ms	Within 0.2 div
20 ms	2 ms	Within 0.2 div
50 ms	5 ms	Within 0.2 div
.1 s	10 ms	Within 0.2 div
.2 s	20 ms	Within 0.2 div
.5 s	50 ms	Within 0.2 div
1 s	.1 s	Within 0.4 div
2 s	.2 s	Within 0.4 div
5 s	.5 s	Within 0.4 div

[1] **Check for 1 time-marker in 2 divisions over the center eight divisions.**

✓ **Performance Requirement check; see introductory information.**

✓ B14. CHECK SPECIAL READOUT ENCODING

a. Remove the 7B87 from the oscilloscope mainframe.

b. Set the AQS CLOCK/AQR switch to INTERNAL.

c. Connect the digital multimeter between pins A29 and B37 on the plug-in rear interface connector. Refer to Figure 4-5 in the Maintenance section for the location of pin numbers on the interface connector.

✓ d. **CHECK**-The resistance should measure 150 kΩ, within the limits of 142.5 to 172.5 kΩ.

e. Set the AQS CLOCK/AQR switch to INT ÷ 1000.

✓ f. **CHECK**-The resistance should measure 75 kΩ, within the limits of 71.25 to 78.75 kΩ.

g. Set the AQS CLOCK/AQR switch to EXTERNAL.

✓ h. **CHECK**-The resistance should measure 50 kΩ, within the limits of 47.5 to 54.1 kΩ.

This completes the Performance Check and Adjustment procedure.

INSTRUMENT OPTIONS

No options were available for this instrument at the time of this printing.

Information on any subsequent options may be found in the CHANGE INFORMATION section in the back of this manual.

REPLACEABLE ELECTRICAL PARTS

PARTS ORDERING INFORMATION

Replacement parts are available from or through your local Tektronix, Inc. Field Office or representative.

Changes to Tektronix instruments are sometimes made to accommodate improved components as they become available, and to give you the benefit of the latest circuit improvements developed in our engineering department. It is therefore important, when ordering parts, to include the following information in your order: Part number, instrument type or number, serial number, and modification number if applicable.

If a part you have ordered has been replaced with a new or improved part, your local Tektronix, Inc. Field Office or representative will contact you concerning any change in part number.

Change information, if any, is located at the rear of this manual.

LIST OF ASSEMBLIES

A list of assemblies can be found at the beginning of the Electrical Parts List. The assemblies are listed in numerical order. When the complete component number of a part is known, this list will identify the assembly in which the part is located.

CROSS INDEX-MFR. CODE NUMBER TO MANUFACTURER

The Mfr. Code Number to Manufacturer index for the Electrical Parts List is located immediately after this page. The Cross Index provides codes, names and addresses of manufacturers of components listed in the Electrical Parts List.

ABBREVIATIONS

Abbreviations conform to American National Standard Y1.1.

COMPONENT NUMBER (column one of the Electrical Parts List)

A numbering method has been used to identify assemblies, subassemblies and parts. Examples of this numbering method and typical expansions are illustrated by the following:

Example a.

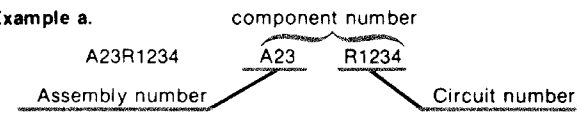

Read: Resistor 1234 of Assembly 23

Example b.

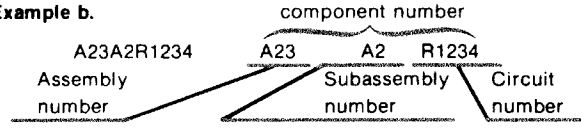

Read: Resistor 1234 of Subassembly 2 of Assembly 23

Only the circuit number will appear on the diagrams and circuit board illustrations. Each diagram and circuit board illustration is clearly marked with the assembly number. Assembly numbers are also marked on the mechanical exploded views located in the Mechanical Parts List. The component number is obtained by adding the assembly number prefix to the circuit number.

The Electrical Parts List is divided and arranged by assemblies in numerical sequence (e.g., assembly A1 with its subassemblies and parts, precedes assembly A2 with its subassemblies and parts).

Chassis-mounted parts have no assembly number prefix and are located at the end of the Electrical Parts List.

TEKTRONIX PART NO. (column two of the Electrical Parts List)

Indicates part number to be used when ordering replacement part from Tektronix.

SERIAL/MODEL NO. (columns three and four of the Electrical Parts List)

Column three (3) indicates the serial number at which the part was first used. Column four (4) indicates the serial number at which the part was removed. No serial number entered indicates part is good for all serial numbers.

NAME & DESCRIPTION (column five of the Electrical Parts List)

In the Parts List, an Item Name is separated from the description by a colon (:). Because of space limitations, an Item Name may sometimes appear as incomplete. For further Item Name identification, the U.S. Federal Cataloging Handbook H6-1 can be utilized where possible.

MFR. CODE (column six of the Electrical Parts List)

Indicates the code number of the actual manufacturer of the part. (Code to name and address cross reference can be found immediately after this page.)

MFR. PART NUMBER (column seven of the Electrical Parts List)

Indicates actual manufacturers part number.

CROSS INDEX - MFR. CODE NUMBER TO MANUFACTURER

Mfr. Code	Manufacturer	Address	City, State, Zip Code
00853	SANGAMO WESTON INC SANGAMO CAPACITOR DIV	SANGAMO RD P O BOX 128	PICKENS SC 29671
01121	ALLEN-BRADLEY CO	1201 SOUTH 2ND ST	MILWAUKEE WI 53204
01295	TEXAS INSTRUMENTS INC SEMICONDUCTOR GROUP	13500 N CENTRAL EXPRESSWAY P O BOX 225012 M/S 49	DALLAS TX 75265
02111	SPECTROL ELECTRONICS CORP SUB OF CARRIER CORP	17070 E GALE AVE P O BOX 1220	CITY OF INDUSTRY CA 91749
02114	AMPEREX ELECTRONIC CORP FERROXCUBE DIV	5083 KINGS HWY	SAUGERTIES NY 12477
02735	RCA CORP SOLID STATE DIVISION	ROUTE 202	SOMERVILLE NJ 08876
03508	GENERAL ELECTRIC CO SEMI-CONDUCTOR PRODUCTS DEPT	N GENESEE ST	AUBURN NY 13021
04222	AVX CERAMICS DIV OF AVX CORP	19TH AVE SOUTH P O BOX 867	MYRTLE BEACH SC 29577
04713	MOTOROLA INC SEMICONDUCTOR GROUP	5005 E MCDOWELL RD	PHOENIX AZ 85008
05397	UNION CARBIDE CORP MATERIALS SYSTEMS DIV	11901 MADISON AVE	CLEVELAND OH 44101
07263	FAIRCHILD CAMERA AND INSTRUMENT CORP SEMICONDUCTOR DIV	464 ELLIS ST	MOUNTAIN VIEW CA 94042
07716	TRW INC TRW ELECTRONICS COMPONENTS TRW IRC FIXED RESISTORS/BURLINGTON	2850 MT PLEASANT AVE	BURLINGTON IA 52601
12697	CLAROSTAT MFG CO INC	LOWER WASHINGTON ST	DOVER NH 03820
14301	ANDERSON ELECTRONICS INC	310 PENN ST	HOLLIDAYSBURG PA 16648
14552	MICRO/SEMICONDUCTOR CORP	2830 S FAIRVIEW ST	SANTA ANA CA 92704
18324	SIGNETICS CORP	811 E ARQUES	SUNNYVALE CA 94086
19396	ILLINOIS TOOL WORKS INC PAKTRON DIVISION	900 FOLLIN LANE S E	VIENNA VA 22180
19701	MEPCO/ELECTRA INC A NORTH AMERICAN PHILIPS CO	P O BOX 760	MINERAL WELLS TX 76067
21847	TRW MICROWAVE INC SUB OF TRW INC	825 STEWART DR	SUNNYVALE CA 94086
24546	CORNING GLASS WORKS	550 HIGH ST	BRADFORD PA 16701
27014	NATIONAL SEMICONDUCTOR CORP	2900 SEMICONDUCTOR DR	SANTA CLARA CA 95051
31918	ITT SCHADOW INC	8081 WALLACE RD	EDEN PRAIRIE MN 55343
32293	INTERSIL INC	10900 N TANTAU AVE	CUPERTINO CA 95014
32997	BOURNS INC TRIMPOT DIV	1200 COLUMBIA AVE	RIVERSIDE CA 92507
50434	HEWLETT-PACKARD CO OPTOELECTRONICS DIV	640 PAGE MILL RD	PALO ALTO CA 94304
51642	CENTRE ENGINEERING INC	2820 E COLLEGE AVE	STATE COLLEGE PA 16801
51984	NEC AMERICA INC	2741 PROSPERITY AVE	FAIRFAX VA 22031
54473	MATSUSHITA ELECTRIC CORP OF AMERICA	ONE PANASONIC WAY	SECAUCUS NJ 07094
56289	SPRAGUE ELECTRIC CO	87 MARSHALL ST	NORTH ADAMS MA 01247
57668	ROHM CORP	16931 MILLIKEN AVE	IRVINE CA 92713
58361	GENERAL INSTRUMENT CORP OPTOELECTRONICS DIV	3400 HILLVIEW AVE	PALO ALTO CA 94304
58854	GTE PRODUCTS CORP LIGHTING PRODUCTS GROUP	60 BOSTON ST	SALEM MA 01970
59660	TUSONIX INC	2155 N FORBES BLVD	TUCSON, ARIZONA 85705
74970	JOHNSON E F CO	299 10TH AVE S W	WASECA MN 56093
75042	TRW INC TRW ELECTRONIC COMPONENTS IRC FIXED RESISTORS PHILADELPHIA DIV	401 N BROAD ST	PHILADELPHIA PA 19108
80009	TEKTRONIX INC	4900 S W GRIFFITH DR P O BOX 500	BEAVERTON OR 97077
91637	DALE ELECTRONICS INC	P O BOX 609	COLUMBUS NE 68601

Component No.	Tektronix Part No.	Serial/Assembly No. Effective	Dscont	Name & Description	Mfr. Code	Mfr. Part No.
A1	------ ------			CKT BOARD ASSY:INTERFACE (REPLACEABLE AS A UNIT WITH 672-0829-XX)		
A2	670-4181-01			CIRCUIT BD ASSY:TRIGGER	80009	670-4181-01
A3	670-4183-00			CIRCUIT BD ASSY:READOUT	80009	670-4183-00
A4	670-6184-00	B010100	B023314	CIRCUIT BD ASSY:CLOCK	80009	670-6184-00
A4	670-6184-01	B023315		CIRCUIT BD ASSY:CLOCK	80009	670-6184-01

Component No.	Tektronix Part No.	Serial/Assembly No. Effective	Dscont	Name & Description	Mfr. Code	Mfr. Part No.
A1	----------			CKT BOARD ASSY:INTERFACE (REPLACEABLE AS A UNIT WITH 672-0829-XX)		
A1C99	281-0786-00			CAP,FXD,CER DI:150PF,10%,100V	04222	MA101A151KAA
A1C204	281-0772-00			CAP,FXD,CER DI:4700PF,10%,100V	04222	MA201C472KAA
A1C211	283-0672-00			CAP,FXD,MICA DI:200PF,1%,500V	00853	D155F2010F0
A1C212	283-0555-00			CAP,FXD,MICA DI:2000PF,1%,500V	00853	D195F202F0
A1C213	285-0683-00			CAP,FXD,PLASTIC:0.022UF,5%,100V	19396	223J01PT485
A1C214	290-0269-00			CAP,FXD,ELCTLT:0.22UF,5%,35V	05397	T320A224J035AS
A1C221	281-0775-00			CAP,FXD,CER DI:0.1UF,20%,50V	04222	MA205E104MAA
A1C222	281-0772-00			CAP,FXD,CER DI:4700PF,10%,100V	04222	MA201C472KAA
A1C225	290-0536-00			CAP,FXD,ELCTLT:10UF,20%,25V TANTALUM	05397	T368B106M025AS
A1C228	290-0534-00			CAP,FXD,ELCTLT:1UF,20%,35V	05397	T368A105M035AZ
A1C273	281-0815-00			CAP,FXD,CER DI:0.027UF,20%,50V	04222	MA205C273MAA
A1C312	283-0691-00			CAP,FXD,MICA DI:650PF,1%,300V	00853	D153F651F0
A1C324	281-0775-00			CAP,FXD,CER DI:0.1UF,20%,50V	04222	MA205E104MAA
A1C333	281-0775-00			CAP,FXD,CER DI:0.1UF,20%,50V	04222	MA205E104MAA
A1C335	281-0775-00			CAP,FXD,CER DI:0.1UF,20%,50V	04222	MA205E104MAA
A1C353	281-0763-00			CAP,FXD,CER DI:47PF,10%,100V	04222	MA101A470KAA
A1C356	283-0616-00			CAP,FXD,MICA DI:75PF,5%,500V	00853	D155E750J0
A1C416	290-0534-00			CAP,FXD,ELCTLT:1UF,20%,35V	05397	T368A105M035AZ
A1C432	281-0775-00			CAP,FXD,CER DI:0.1UF,20%,50V	04222	MA205E104MAA
A1C440	281-0616-00			CAP,FXD,CER DI:6.8PF,+/-0.5PF,200V	59660	374-018-C0H06890
A1C441	281-0592-00			CAP,FXD,CER DI:4.7PF,+/-0.5PF,500V	59660	301-000C0H0-4790
A1C522	283-0119-00			CAP,FXD,CER DI:2200PF,5%,200V	59660	855-XXXY5E0222J
A1C523	290-0527-00			CAP,FXD,ELCTLT:15UF,20%,20V	05397	T368B156M020AS
A1C526	290-0527-00			CAP,FXD,ELCTLT:15UF,20%,20V	05397	T368B156M020AS
A1C573	290-0527-00			CAP,FXD,ELCTLT:15UF,20%,20V	05397	T368B156M020AS
A1C576	281-0775-00			CAP,FXD,CER DI:0.1UF,20%,50V	04222	MA205E104MAA
A1C712	290-0420-00			CAP,FXD,ELCTLT:0.68UF,20%,75V	05397	T110A684M075AS
A1C730	281-0772-00			CAP,FXD,CER DI:4700PF,10%,100V	04222	MA201C472KAA
A1C731	281-0772-00			CAP,FXD,CER DI:4700PF,10%,100V	04222	MA201C472KAA
A1C810	281-0775-00	B010100	B023285	CAP,FXD,CER DI:0.1UF,20%,50V	04222	MA205E104MAA
A1C810	283-0167-00	B023286		CAP,FXD,CER DI:0.1UF,10%,100V	04222	3430-100C-104K
A1C820	290-0745-00			CAP,FXD,ELCTLT:22UF,+50-10%,25V	54473	ECE-A25V22L
A1C822	281-0815-00			CAP,FXD,CER DI:0.027UF,20%,50V	04222	MA205C273MAA
A1C830	290-0745-00			CAP,FXD,ELCTLT:22UF,+50-10%,25V	54473	ECE-A25V22L
A1C840	290-0745-00			CAP,FXD,ELCTLT:22UF,+50-10%,25V	54473	ECE-A25V22L
A1C844	281-0815-00			CAP,FXD,CER DI:0.027UF,20%,50V	04222	MA205C273MAA
A1CR202	152-0153-00			SEMICOND DVC,DI:SM,SI,10V,50MA,.00-7	07263	F07003
A1CR206	152-0141-02			SEMICOND DVC,DI:SM,SI,30V,150MA,30V,DO-35	03508	DA2527 (1N4152)
A1CR208	152-0141-02			SEMICOND DVC,DI:SM,SI,30V,150MA,30V,DO-35	03508	DA2527 (1N4152)
A1CR224	152-0141-02			SEMICOND DVC,DI:SM,SI,30V,150MA,30V,DO-35	03508	DA2527 (1N4152)
A1CR225	152-0141-02			SEMICOND DVC,DI:SM,SI,30V,150MA,30V,DO-35	03508	DA2527 (1N4152)
A1CR226	152-0141-02			SEMICOND DVC,DI:SM,SI,30V,150MA,30V,DO-35	03508	DA2527 (1N4152)
A1CR273	152-0141-02			SEMICOND DVC,DI:SM,SI,30V,150MA,30V,DO-35	03508	DA2527 (1N4152)
A1CR301	152-0141-02			SEMICOND DVC,DI:SM,SI,30V,150MA,30V,DO-35	03508	DA2527 (1N4152)
A1CR302	152-0141-02			SEMICOND DVC,DI:SM,SI,30V,150MA,30V,DO-35	03508	DA2527 (1N4152)
A1CR314	152-0141-02			SEMICOND DVC,DI:SM,SI,30V,150MA,30V,DO-35	03508	DA2527 (1N4152)
A1CR323	152-0322-00			SEMICOND DVC,DI:SCHOTTKY BARRIER,SI,15V	21847	A2X600
A1CR324	152-0141-02			SEMICOND DVC,DI:SM,SI,30V,150MA,30V,DO-35	03508	DA2527 (1N4152)
A1CR334	152-0141-02			SEMICOND DVC,DI:SM,SI,30V,150MA,30V,DO-35	03508	DA2527 (1N4152)
A1CR344	152-0141-02			SEMICOND DVC,DI:SM,SI,30V,150MA,30V,DO-35	03508	DA2527 (1N4152)
A1CR356	152-0141-02			SEMICOND DVC,DI:SM,SI,30V,150MA,30V,DO-35	03508	DA2527 (1N4152)
A1CR362	152-0141-02			SEMICOND DVC,DI:SM,SI,30V,150MA,30V,DO-35	03508	DA2527 (1N4152)
A1CR372	152-0322-00			SEMICOND DVC,DI:SCHOTTKY BARRIER,SI,15V	21847	A2X600
A1CR423	152-0141-02			SEMICOND DVC,DI:SM,SI,30V,150MA,30V,DO-35	03508	DA2527 (1N4152)
A1CR433	152-0141-02			SEMICOND DVC,DI:SM,SI,30V,150MA,30V,DO-35	03508	DA2527 (1N4152)
A1CR435	152-0141-02			SEMICOND DVC,DI:SM,SI,30V,150MA,30V,DO-35	03508	DA2527 (1N4152)
A1CR526	152-0141-02			SEMICOND DVC,DI:SM,SI,30V,150MA,30V,DO-35	03508	DA2527 (1N4152)

Component No.	Tektronix Part No.	Serial/Assembly No. Effective	Dscont	Name & Description	Mfr. Code	Mfr. Part No.
A1CR567	152-0141-02			SEMICOND DVC,DI:SW,SI,30V,150MA,30V,DO-35	03508	DA2527 (1N4152)
A1CR578	152-0141-02			SEMICOND DVC,DI:SW,SI,30V,150MA,30V,DO-35	03508	DA2527 (1N4152)
A1CR579	152-0141-02			SEMICOND DVC,DI:SW,SI,30V,150MA,30V,DO-35	03508	DA2527 (1N4152)
A1CR717	152-0141-02			SEMICOND DVC,DI:SW,SI,30V,150MA,30V,DO-35	03508	DA2527 (1N4152)
A1CR718	152-0141-02			SEMICOND DVC,DI:SW,SI,30V,150MA,30V,DO-35	03508	DA2527 (1N4152)
A1CR723	152-0141-02			SEMICOND DVC,DI:SW,SI,30V,150MA,30V,DO-35	03508	DA2527 (1N4152)
A1CR724	152-0141-02			SEMICOND DVC,DI:SW,SI,30V,150MA,30V,DO-35	03508	DA2527 (1N4152)
A1CR844	152-0141-02			SEMICOND DVC,DI:SW,SI,30V,150MA,30V,DO-35	03508	DA2527 (1N4152)
A1E274	276-0507-00			SHLD BEAD,ELEK:FERRITE	02114	56-590-65B/3B
A1E382	276-0507-00			SHLD BEAD,ELEK:FERRITE	02114	56-590-65B/3B
A1E578	276-0507-00			SHLD BEAD,ELEK:FERRITE	02114	56-590-65B/3B
A1LR810	108-0537-00			COIL,RF:FIXED,200UH	80009	108-0537-00
A1LR820	108-0537-00			COIL,RF:FIXED,200UH	80009	108-0537-00
A1LR830	108-0537-00			COIL,RF:FIXED,200UH	80009	108-0537-00
A1LR840	108-0537-00			COIL,RF:FIXED,200UH	80009	108-0537-00
A1Q201	151-0221-00			TRANSISTOR:PNP,SI,TO-92	04713	SPS246
A1Q202	151-0325-00			TRANSISTOR:PNP,SI,TO-92,SEL	80009	151-0325-00
A1Q203	151-0220-00	B010100	B011049	TRANSISTOR:PNP,SI,TO-92	04713	SPS8867
A1Q203	151-0216-00	B011050		TRANSISTOR:PNP,SI,TO-92	04713	SPS8803
A1Q204	151-0223-00			TRANSISTOR:NPN,SI,TO-92	04713	SPS8026
A1Q206	151-0223-00			TRANSISTOR:NPN,SI,TO-92	04713	SPS8026
A1Q210	151-0273-00			TRANSISTOR:SELECTED	03508	X16E3616
A1Q214	151-0220-00			TRANSISTOR:PNP,SI,TO-92	04713	SPS8867
A1Q230	151-0302-00			TRANSISTOR:NPN,SI,TO-18	04713	ST899
A1Q234	151-0301-00			TRANSISTOR:PNP,SI,TO-18	04713	ST898
A1Q242	151-0223-00			TRANSISTOR:NPN,SI,TO-92	04713	SPS8026
A1Q272	151-0223-00			TRANSISTOR:NPN,SI,TO-92	04713	SPS8026
A1Q274	151-0223-00			TRANSISTOR:NPN,SI,TO-92	04713	SPS8026
A1Q304	151-0354-00			TRANSISTOR:PNP,SI,TO-78	32293	ITS-1200-A
A1Q314	151-0220-00			TRANSISTOR:PNP,SI,TO-92	04713	SPS8867
A1Q322	151-0367-00			TRANSISTOR:NPN,SI,X-55	04713	SPS 8811
A1Q324	151-0367-00			TRANSISTOR:NPN,SI,X-55	04713	SPS 8811
A1Q334	151-1036-00			TRANSISTOR:FET,N-CHAN,SI,TO-71	80009	151-1036-00
A1Q338	151-0437-00	B010100	B011049	TRANSISTOR:SELECTED	07263	S038704
A1Q338	151-0127-00	B011050		TRANSISTOR:NPN,SI,TO-18	04713	SL6073A
A1Q344	151-0220-00			TRANSISTOR:PNP,SI,TO-92	04713	SPS8867
A1Q346	151-0220-00			TRANSISTOR:PNP,SI,TO-92	04713	SPS8867
A1Q352	151-0221-00			TRANSISTOR:PNP,SI,TO-92	04713	SPS246
A1Q356	151-0221-00			TRANSISTOR:PNP,SI,TO-92	04713	SPS246
A1Q358	151-0223-00			TRANSISTOR:NPN,SI,TO-92	04713	SPS8026
A1Q362	151-0221-00			TRANSISTOR:PNP,SI,TO-92	04713	SPS246
A1Q372	151-0223-00			TRANSISTOR:NPN,SI,TO-92	04713	SPS8026
A1Q382	151-0367-00			TRANSISTOR:NPN,SI,X-55	04713	SPS 8811
A1Q424	151-0220-00			TRANSISTOR:PNP,SI,TO-92	04713	SPS8867
A1Q428	151-0325-00			TRANSISTOR:PNP,SI,TO-92,SEL	80009	151-0325-00
A1Q434	151-0220-00			TRANSISTOR:PNP,SI,TO-92	04713	SPS8867
A1Q438	151-0325-00			TRANSISTOR:PNP,SI,TO-92,SEL	80009	151-0325-00
A1Q448	151-0472-00			TRANSISTOR:NPN,SI,TO-92	51984	NE41632B
A1Q458	151-0472-00			TRANSISTOR:NPN,SI,TO-92	51984	NE41632B
A1Q512	151-0354-00			TRANSISTOR:PNP,SI,TO-78	32293	ITS-1200-A
A1Q518	151-0410-00			TRANSISTOR:PNP,SI,TO-92	04713	SPS6765
A1Q522	151-0354-00			TRANSISTOR:PNP,SI,TO-78	32293	ITS-1200-A
A1Q528	151-0410-00			TRANSISTOR:PNP,SI,TO-92	04713	SPS6765
A1Q562	151-0223-00			TRANSISTOR:NPN,SI,TO-92	04713	SPS8026
A1Q564	151-0223-00			TRANSISTOR:NPN,SI,TO-92	04713	SPS8026
A1Q568	151-0223-00			TRANSISTOR:NPN,SI,TO-92	04713	SPS8026
A1Q572	151-0223-00			TRANSISTOR:NPN,SI,TO-92	04713	SPS8026
A1Q574	151-0223-00			TRANSISTOR:NPN,SI,TO-92	04713	SPS8026
A1Q576	151-0223-00			TRANSISTOR:NPN,SI,TO-92	04713	SPS8026

Component No.	Tektronix Part No.	Serial/Assembly No. Effective	Dscont	Name & Description	Mfr. Code	Mfr. Part No.
A1Q578	151-0190-00			TRANSISTOR:NPN,SI,TO-92	80009	151-0190-00
A1Q844	151-0301-00			TRANSISTOR:PNP,SI,TO-18	04713	ST898
A1R28	315-0822-00			RES,FXD,CMPSN:8.2K OHM,5%,0.25W	19701	5043CX8K200J
A1R88	315-0100-00			RES,FXD,CMPSN:10 OHM,5%,0.25W	19701	5043CX10RR00J
A1R99	315-0911-00			RES,FXD,CMPSN:910 OHM,5%,0.25W	57668	NTR25J-E910E
A1R201	315-0223-00			RES,FXD,CMPSN:22K OHM,5%,0.25W	19701	5043CX22K00J92U
A1R202	315-0202-00			RES,FXD,CMPSN:2K OHM,5%,0.25W	57668	NTR25J-E 2K
A1R203	315-0391-00			RES,FXD,CMPSN:390 OHM,5%,0.25W	57668	NTR25J-E390E
A1R204	315-0392-00			RES,FXD,CMPSN:3.9K OHM,5%,0.25W	57668	NTR25J-E03K9
A1R205	315-0471-00			RES,FXD,CMPSN:470 OHM,5%,0.25W	57668	NTR25J-E470E
A1R206	321-0219-00			RES,FXD,FILM:1.87K OHM,1%,0.125W,TC=T0	07716	CEAD18700F
A1R207	321-0173-00			RES,FXD,FILM:619 OHM,1%,0.125W,TC=T0	07716	CEAD619R0F
A1R208	315-0102-00			RES,FXD,CMPSN:1K OHM,5%,0.25W	57668	NTR25JE01K0
A1R209	321-0274-00			RES,FXD,FILM:6.98K OHM,1%,0.125W,TC=T0	19701	5043ED6K980F
A1R211	301-0752-00			RES,FXD,CMPSN:7.5K OHM,5%,0.5W	19701	5053CX7K500J
A1R212	321-0373-00			RES,FXD,FILM:75.0K OHM,1%,0.125W,TC=T0	19701	5033ED75K00F
A1R213	321-0373-00			RES,FXD,FILM:75.0K OHM,1%,0.125W,TC=T0	19701	5033ED75K00F
A1R214	321-0689-00			RES,FXD,FILM:24.9K OHM,0.5%,0.125W,TC=T0	91637	MFF1816G24901D
A1R215	315-0101-00			RES,FXD,CMPSN:100 OHM,5%,0.25W	57668	NTR25J-E 100E
A1R216	321-0689-00			RES,FXD,FILM:24.9K OHM,0.5%,0.125W,TC=T0	91637	MFF1816G24901D
A1R217	321-0291-00			RES,FXD,FILM:10.5K OHM,1%,0.125W,TC=T0	80009	321-0291-00
A1R218	321-0267-00			RES,FXD,FILM:5.90K OHM,1%,0.125_,TC=T0	19701	5033ED5K900F
A1R222	315-0472-00			RES,FXD,CMPSN:4.7K OHM,5%,0.25W	57668	NTR25J-E04K7
A1R224	315-0622-00			RES,FXD,CMPSN:6.2K OHM,5%,0.25W	19701	5043CX6K200J
A1R225	315-0103-00			RES,FXD,CMPSN:10K OHM,5%,0.25W	19701	5043CX10K00J
A1R226	315-0393-00			RES,FXD,CMPSN:39K OHM,5%,0.25W	57668	NTR25J-E39K0
A1R227	315-0121-00			RES,FXD,CMPSN:120 OHM,5%,0.25W	19701	5043CX120R0J
A1R228	315-0184-00			RES,FXD,CMPSN:180K OHM,5%,0.25W	19701	5043CX180K0J
A1R231	315-0432-00			RES,FXD,CMPSN:4.3K OHM,5%,0.25W	57668	NTR25J-E04K3
A1R232	315-0121-00			RES,FXD,CMPSN:120 OHM,5%,0.25W	19701	5043CX120R0J
A1R233	315-0561-00			RES,FXD,CMPSN:560 OHM,5%,0.25W	19701	5043CX560R0J
A1R234	315-0430-00			RES,FXD,CMPSN:43 OHM,5%,0.25W	19701	5043CX43R00J
A1R240	315-0471-00			RES,FXD,CMPSN:470 OHM,5%,0.25W	57668	NTR25J-E470E
A1R241	315-0241-00			RES,FXD,CMPSN:240 OHM,5%,0.25W	19701	5043CX240R0J
A1R242	315-0332-00			RES,FXD,CMPSN:3.3K OHM,5%,0.25W	57668	NTR25J-E03K3
A1R243	315-0821-00			RES,FXD,CMPSN:820 OHM,5%,0.25W	19701	5043CX820R0J
A1R244	315-0432-00			RES,FXD,CMPSN:4.3K OHM,5%,0.25W	57668	NTR25J-E04K3
A1R271	315-0222-00			RES,FXD,CMPSN:2.2K OHM,5%,0.25W	57668	NTR25J-E02K2
A1R272	315-0472-00			RES,FXD,CMPSN:4.7K OHM,5%,0.25W	57668	NTR25J-E04K7
A1R274	315-0302-00			RES,FXD,CMPSN:3K OHM,5%,0.25W	57668	NTR25J-E03K0
A1R275	315-0510-00			RES,FXD,CMPSN:51 OHM,5%,0.25W	19701	5043CX51R00J
A1R301	315-0221-00			RES,FXD,CMPSN:220 OHM,5%,0.25W	57668	NTR25J-E220E
A1R303	315-0470-00			RES,FXD,CMPSN:47 OHM,5%,0.25W	57668	NTR25J-E47E0
A1R304	315-0103-00			RES,FXD,CMPSN:10K OHM,5%,0.25W	19701	5043CX10K00J
A1R305	311-1228-00			RES,VAR,NONWW:TRMR,10K OHM,0.5W	32997	3386F-T04-103
A1R307	321-0301-00			RES,FXD,FILM:13.3K OHM,1%,0.125W,TC=T0	07716	CEAD13301F
A1R308	321-0275-00			RES,FXD,FILM:7.15K OHM,1%,0.125W,TC=T0	07716	CEAD71500F
A1R312	315-0201-00			RES,FXD,CMPSN:200 OHM,5%,0.25W	57668	NTR25J-E200E
A1R313	315-0101-00			RES,FXD,CMPSN:100 OHM,5%,0.25W	57668	NTR25J-E 100E
A1R314	315-0101-00			RES,FXD,CMPSN:100 OHM,5%,0.25W	57668	NTR25J-E 100E
A1R315	315-0112-00			RES,FXD,CMPSN:1.1K OHM,5%,0.25W	19701	5043CX1K100J
A1R321	315-0101-00			RES,FXD,CMPSN:100 OHM,5%,0.25W	57668	NTR25J-E 100E
A1R322	323-0175-00			RES,FXD,FILM:649 OHM,1%,0.5W,TC=T0	75042	CECT0-6490F
A1R323	315-0101-00			RES,FXD,CMPSN:100 OHM,5%,0.25W	57668	NTR25J-E 100E
A1R324	315-0100-00			RES,FXD,CMPSN:10 OHM,5%,0.25W	19701	5043CX10RR00J
A1R325	315-0221-00			RES,FXD,CMPSN:220 OHM,5%,0.25W	57668	NTR25J-E220E
A1R326	315-0222-00			RES,FXD,CMPSN:2.2K OHM,5%,0.25W	57668	NTR25J-E02K2
A1R333	315-0470-00			RES,FXD,CMPSN:47 OHM,5%,0.25W	57668	NTR25J-E47E0
A1R334	315-0101-00			RES,FXD,CMPSN:100 OHM,5%,0.25W	57668	NTR25J-E 100E

Component No.	Tektronix Part No.	Serial/Assembly No. Effective	Dscont	Name & Description	Mfr. Code	Mfr. Part No.
A1R335	315-0470-00			RES,FXD,CMPSN:47 OHM,5%,0.25W	57668	NTR25J-E47E0
A1R336	315-0101-00			RES,FXD,CMPSN:100 OHM,5%,0.25W	57668	NTR25J-E 100E
A1R337	315-0272-00			RES,FXD,CMPSN:2.7K OHM,5%,0.25W	57668	NTR25J-E02K7
A1R338	315-0120-00			RES,FXD,CMPSN:12 OHM,5%,0.25W	57668	NTR25J-R12
A1R339	315-0470-00			RES,FXD,CMPSN:47 OHM,5%,0.25W	57668	NTR25J-E47E0
A1R341	321-0260-00			RES,FXD,FILM:4.99K OHM,1%,0.125W,TC=T0	19701	5033ED4K990F
A1R342	315-0474-00			RES,FXD,CMPSN:470K OHM,5%,0.25W	19701	5043CX470K0J92U
A1R343	321-0263-00			RES,FXD,FILM:5.36K OHM,1%,0.125W,TC=T0	07716	CEAD53600F
A1R344	315-0431-00			RES,FXD,CMPSN:430 OHM,5%,0.25W	19701	5043CX430R0J
A1R345	315-0242-00			RES,FXD,CMPSN:2.4K OHM,5%,0.25W	57668	NTR25J-E02K4
A1R346	315-0472-00			RES,FXD,CMPSN:4.7K OHM,5%,0.25W	57668	NTR25J-E04K7
A1R347	315-0510-00			RES,FXD,CMPSN:51 OHM,5%,0.25W	19701	5043CX51R00J
A1R350	315-0751-00			RES,FXD,CMPSN:750 OHM,5%,0.25W	57668	NTR25J-E750E
A1R351	315-0161-00			RES,FXD,CMPSN:160 OHM,5%,0.25W	57668	NTR25J-E 160E
A1R352	315-0222-00			RES,FXD,CMPSN:2.2K OHM,5%,0.25W	57668	NTR25J-E02K2
A1R353	321-0222-07			RES,FXD,FILM:2.0K OHM,0.1%,0.125W,TC=T9	19701	5033RE2K000B
A1R354	321-0196-00			RES,FXD,FILM:1.07K OHM,1%,0.125W,TC=T0	07716	CEAD10700F
A1R355	315-0162-00			RES,FXD,CMPSN:1.6K OHM,5%,0.25W	19701	5043CX1K600J
A1R356	321-0229-00			RES,FXD,FILM:2.37K OHM,1%,0.125W,TC=T0	19701	5043ED2K37F
A1R358	321-0185-00			RES,FXD,FILM:825 OHM,1%,0.125W,TC=T0	07716	CEAD825R0F
A1R362	315-0122-00			RES,FXD,CMPSN:1.2K OHM,5%,0.25W	57668	NTR25J-E01K2
A1R371	315-0121-00			RES,FXD,CMPSN:120 OHM,5%,0.25W	19701	5043CX120R0J
A1R372	315-0102-00			RES,FXD,CMPSN:1K OHM,5%,0.25W	57668	NTR25JE01K0
A1R373	321-0173-00			RES,FXD,FILM:619 OHM,1%,0.125W,TC=T0	07716	CEAD619R0F
A1R381	315-0202-00			RES,FXD,CMPSN:2K OHM,5%,0.25W	57668	NTR25J-E 2K
A1R383	315-0510-00			RES,FXD,CMPSN:51 OHM,5%,0.25W	19701	5043CX51R00J
A1R412	315-0513-00			RES,FXD,CMPSN:51K OHM,5%,0.25W	57668	NTR25J-E51K0
A1R413	315-0105-00			RES,FXD,CMPSN:1M OHM,5%,0.25W	19701	5043CX1M000J
A1R414	321-0362-00			RES,FXD,FILM:57.6K OHM,1%,0.125W,TC=T0	19701	5043ED57K60F
A1R416	321-0289-03			RES,FXD,FILM:10.0K OHM,0.25%,0.125W,TC=T2	07716	CEAC10001C
A1R422	315-0680-00			RES,FXD,CMPSN:68 OHM,5%,0.25W	57668	NTR25J-E68E0
A1R424	323-0285-00			RES,FXD,FILM:9.09K OHM,1%,0.5W,TC=T0	19701	5053RD9K090F
A1R426	315-0180-00			RES,FXD,CMPSN:18 OHM,5%,0.25W	19701	5043CX18R00J
A1R427	315-0103-00			RES,FXD,CMPSN:10K OHM,5%,0.25W	19701	5043CX10K00J
A1R428	315-0473-00			RES,FXD,CMPSN:47K OHM,5%,0.25W	57668	NTR25J-E47K0
A1R430	311-1423-00			RES,VAR,NONWW:TRMR,20 OHM,0.5W	32997	3386F-T04-200
A1R431	321-0122-00			RES,FXD,FILM:182 OHM,1%,0.125W,TC=T0	19701	5033ED182R0F
A1R432	315-0180-00			RES,FXD,CMPSN:18 OHM,5%,0.25W	19701	5043CX18R00J
A1R433	315-0820-00			RES,FXD,CMPSN:82 OHM,5%,0.25W	57668	NTR25J-E82E0
A1R434	323-0285-00			RES,FXD,FILM:9.09K OHM,1%,0.5W,TC=T0	19701	5053RD9K090F
A1R435	321-0400-00			RES,FXD,FILM:143K OHM,1%,0.125W,TC=T0	19701	5043ED143K0F
A1R436	315-0180-00			RES,FXD,CMPSN:18 OHM,5%,0.25W	19701	5043CX18R00J
A1R437	315-0103-00			RES,FXD,CMPSN:10K OHM,5%,0.25W	19701	5043CX10K00J
A1R438	315-0473-00			RES,FXD,CMPSN:47K OHM,5%,0.25W	57668	NTR25J-E47K0
A1R439	315-0151-00			RES,FXD,CMPSN:150 OHM,5%,0.25W	57668	NTR25J-E150E
A1R440	315-0470-00			RES,FXD,CMPSN:47 OHM,5%,0.25W	57668	NTR25J-E47E0
A1R441	315-0682-00			RES,FXD,CMPSN:6.8K OHM,5%,0.25W	57668	NTR25J-E06K8
A1R442	321-0225-06			RES,FXD,FILM:2.15K OHM,0.25%,0.125W,T=T9MI	07716	CEAE21500C
A1R444	322-0210-00			RES,FXD,FILM:1.50K OHM,1%,0.25W,TC=T0	75042	CEBT0-1501F
A1R445	311-1226-00			RES,VAR,NONWW:TRMR,2.5K OHM,0.5W	32997	3386F-T04-252
A1R446	315-0682-00			RES,FXD,CMPSN:6.8K OHM,5%,0.25W	57668	NTR25J-E06K8
A1R447	321-0928-00			RES,FXD,FILM:250 OHM,1%,0.125W,TC=T0	91637	MFF1816D250R0C
A1R448	322-0218-00			RES,FXD,FILM:1.82K OHM,1%,0.25W,TC=T0	75042	CEBT0-1821F
A1R449	322-0224-00			RES,FXD,FILM:2.10K OHM,1%,0.25W,TC=T0	19701	5043RD2K100F
A1R454	322-0210-00			RES,FXD,FILM:1.50K OHM,1%,0.25W,TC=T0	75042	CEBT0-1501F
A1R455	321-0124-00			RES,FXD,FILM:191 OHM,1%,0.125W, TC=T0	07716	CEAD191R0F
A1R456	315-0682-00			RES,FXD,CMPSN:6.8K OHM,5%,0.25W	57668	NTR25J-E06K8
A1R457	321-0928-03			RES,FXD,FILM:250 OHM,0.25%,0.125W,TC=T2	91637	MFF1816D250R0C
A1R458	322-0218-00			RES,FXD,FILM:1.82K OHM,1%,0.25W,TC=T0	75042	CEBT0-1821F

Component No.	Tektronix Part No.	Serial/Assembly No. Effective	Dscont	Name & Description	Mfr. Code	Mfr. Part No.
A1R459	322-0224-00			RES,FXD,FILM:2.10K OHM,1%,0.25M,TC=T0	19701	5043R02K100F
A1R514	315-0221-00			RES,FXD,CMPSN:220 OHM,5%,0.25M	57668	NTR25J-E220E
A1R518	321-0260-00			RES,FXD,FILM:4.99K OHM,1%,0.125M,TC=T0	19701	5033ED4K990F
A1R522	315-0331-00			RES,FXD,CMPSN:330 OHM,5%,0.25M	57668	NTR25J-E330E
A1R524	315-0221-00			RES,FXD,CMPSN:220 OHM,5%,0.25M	57668	NTR25J-E220E
A1R526	321-0260-00			RES,FXD,FILM:4.99K OHM,1%,0.125M,TC=T0	19701	5033ED4K990F
A1R527	321-0285-00			RES,FXD,FILM:9.09K OHM,1%,0.125M,TC=T0	07716	CEA090900F
A1R528	321-0260-00			RES,FXD,FILM:4.99K OHM,1%,0.125M,TC=T0	19701	5033ED4K990F
A1R560	321-0196-00			RES,FXD,FILM:1.07K OHM,1%,0.125M,TC=T0	07716	CEA010700F
A1R561	321-0302-00			RES,FXD,FILM:13.7K OHM,1%,0.125M,TC=T0	07716	CEA0 13701F
A1R562	315-0242-00			RES,FXD,CMPSN:2.4K OHM,5%,0.25M	57668	NTR25J-E02K4
A1R563	315-0102-00			RES,FXD,CMPSN:1K OHM,5%,0.25M	57668	NTR25JE01K0
A1R564	315-0510-00			RES,FXD,CMPSN:51 OHM,5%,0.25M	19701	5043CX51R00J
A1R567	315-0242-00			RES,FXD,CMPSN:2.4K OHM,5%,0.25M	57668	NTR25J-E02K4
A1R569	315-0223-00			RES,FXD,CMPSN:22K OHM,5%,0.25M	19701	5043CX22K00J92U
A1R570	315-0511-00			RES,FXD,CMPSN:510 OHM,5%,0.25M	19701	5043CX510R0J
A1R571	315-0153-00			RES,FXD,CMPSN:15K OHM,5%,0.25M	19701	5043CX15K00J
A1R572	315-0270-00			RES,FXD,CMPSN:27 OHM,5%,0.25M	19701	5043CX27R00J
A1R573	315-0153-00			RES,FXD,CMPSN:15K OHM,5%,0.25M	19701	5043CX15K00J
A1R574	315-0242-00			RES,FXD,CMPSN:2.4K OHM,5%,0.25M	57668	NTR25J-E02K4
A1R575	315-0392-00			RES,FXD,CMPSN:3.9K OHM,5%,0.25M	57668	NTR25J-E03K9
A1R576	315-0112-00			RES,FXD,CMPSN:1.1K OHM,5%,0.25M	19701	5043CX1K100J
A1R577	315-0302-00			RES,FXD,CMPSN:3K OHM,5%,0.25M	57668	NTR25J-E03K0
A1R578	315-0510-00			RES,FXD,CMPSN:51 OHM,5%,0.25M	19701	5043CX51R00J
A1R579	315-0122-00			RES,FXD,CMPSN:1.2K OHM,5%,0.25M	57668	NTR25J-E01K2
A1R706	321-0438-00			RES,FXD,FILM:357K OHM,1%,0.125M,TC=T0	07716	CEA035702F
A1R710	311-1232-00			RES,VAR,NONWW:TRMR,50K OHM,0.5M	32997	3386F-T04-503
A1R711	321-0458-00			RES,FXD,FILM:576K OHM,1%,0.125M,TC=T0	07716	CEA057602F
A1R712	315-0273-00			RES,FXD,CMPSN:27K OHM,5%,0.25M	57668	NTR25J-E27K0
A1R713	315-0273-00			RES,FXD,CMPSN:27K OHM,5%,0.25M	57668	NTR25J-E27K0
A1R714	321-0363-00			RES,FXD,FILM:59.0K OHM,1%,0.125M,TC=T0	07716	CEA059001F
A1R715	311-1232-00			RES,VAR,NONWW:TRMR,50K OHM,0.5M	32997	3386F-T04-503
A1R717	321-0360-00			RES,FXD,FILM:54.9K OHM,1%,0.125M,TC=T0	19701	5033ED54K90F
A1R721	315-0121-00			RES,FXD,CMPSN:120 OHM,5%,0.25M	19701	5043CX120R0J
A1R722	321-0225-06			RES,FXD,FILM:2.15K OHM,0.25%,0.125M,T=T9MI	07716	CEAE21500C
A1R723	321-0642-00			RES,FXD,FILM:20.3K OHM,0.25%,0.125M,T=T9	91637	MFF1816C20301C
A1R724	315-0682-00			RES,FXD,CMPSN:6.8K OHM,5%,0.25M	57668	NTR25J-E06K8
A1R728	301-0432-00			RES,FXD,CMPSN:4.3K OHM,5%,0.5M	19701	5053CX4K300J
A1R729	315-0101-00			RES,FXD,CMPSN:100 OHM,5%,0.25M	57668	NTR25J-E 100E
A1R731	315-0221-00			RES,FXD,CMPSN:220 OHM,5%,0.25M	57668	NTR25J-E220E
A1R741	323-0810-07			RES,FXD,FILM:4 MEG OHM,0.1%,0.5M,TC=T9	24546	NE65E4004B
A1R742	323-0809-07			RES,FXD,FILM:2.667MEG OHM,0.1%,0.5M,TC=T9	19701	5053RE2M667B
A1R743	323-1500-07			RES,FXD,FILM:1.6MEG OHM,0.1%,0.5M,TC=T2	24546	NE65E1604B
A1R744	323-0620-07			RES,FXD,FILM:800K OHM,0.1%,0.5M,TC=T9	24546	NE65E8003B
A1R745	323-0806-07			RES,FXD,FILM:266.7K OHM,0.1%,0.5M,TC=T9	24546	ADVISE
A1R746	323-1404-07			RES,FXD,FILM:160K OHM,0.1%,0.5M,TC=T9	24546	NE65E1603B
A1R747	323-0805-07			RES,FXD,FILM:80.0K OHM,0.1%,0.5M,TC=T9	24546	NE65E8002B
A1R748	323-0802-07			RES,FXD,FILM:26.67K OHM,0.1%,0.5M,TC=T9	07716	CECE26671B
A1R749	323-1308-07			RES,FXD,FILM:16.0K OHM,0.1%,0.5M,TC=T9	24546	NE65E1602B
A1R803	321-0308-00			RES,FXD,FILM:15.8K OHM,1%,0.125M,TC=T0	07716	CEA0 15801F
A1R806	315-0154-00			RES,FXD,CMPSN:150K OHM,5%,0.25M	57668	NTR25J-E150K
A1R821	315-0510-00			RES,FXD,CMPSN:51 OHM,5%,0.25M	19701	5043CX51R00J
A1R832	315-0150-00			RES,FXD,CMPSN:15 OHM,5%,0.25M	19701	5043CX15R00J
A1R841	321-0260-00			RES,FXD,FILM:4.99K OHM,1%,0.125M,TC=T0	19701	5033ED4K990F
A1R842	321-0289-03			RES,FXD,FILM:10.0K OHM,0.25%,0.125M,TC=T2	07716	CEAC10001C
A1R844	315-0241-00			RES,FXD,CMPSN:240 OHM,5%,0.25M	19701	5043CX240R0J
A1S435	260-1771-00			SWITCH,PUSH:1 BUTTON,2 POLE,SLOPE	31918	ORDER BY DESCR
A1T35	120-0444-00			XFMR,TOROID:	80009	120-0444-00
A1U220	155-0049-02			MICROCKT,DGTL:SWEEP CONTROL,W/LOCKOUT	80009	155-0049-02

Component No.	Tektronix Part No.	Serial/Assembly No. Effective	Dscont	Name & Description	Mfr. Code	Mfr. Part No.
A1U416	156-0067-02			MICROCKT,LINEAR:OPNL AMPL,SELECTED	02735	85147
A1U722	156-1149-00			MICROCKT,LINEAR:OPERATIONAL AMP,JFET INPUT	27014	LF351N/GLEA134
A1U842	156-0067-02			MICROCKT,LINEAR:OPNL AMPL,SELECTED	02735	85147
A1VR314	152-0168-00			SEMICOND DVC,DI:ZEN,SI,12V,5%,0.4W,DO-763B	14552	TD331689
A1VR728	152-0226-00			SEMICOND DVC,DI:ZEN,SI,5.1V,5%,0.4W,DO-7	04713	SZ12262RL
A1W1	131-0566-00			BUS,COND:DUMMY RES,0.094 OD X 0.225 L	24546	OMA 07
A1W2	131-0566-00			BUS,COND:DUMMY RES,0.094 OD X 0.225 L	24546	OMA 07
A1W3	131-0566-00			BUS,COND:DUMMY RES,0.094 OD X 0.225 L	24546	OMA 07
A1W4	131-0566-00			BUS,COND:DUMMY RES,0.094 OD X 0.225 L	24546	OMA 07
A1W5	131-0566-00			BUS,COND:DUMMY RES,0.094 OD X 0.225 L	24546	OMA 07

Component No.	Tektronix Part No.	Serial/Assembly No. Effective	Dscont	Name & Description	Mfr. Code	Mfr. Part No.
A2	670-4181-01			CIRCUIT BD ASSY:TRIGGER	80009	670-4181-01
A2C3	290-0748-00			CAP,FXD,ELCTLT:10UF,+50-10%,25V	54473	ECE-B1EV100S
A2C5	290-0748-00			CAP,FXD,ELCTLT:10UF,+50-10%,25V	54473	ECE-B1EV100S
A2C7	290-0748-00			CAP,FXD,ELCTLT:10UF,+50-10%,25V	54473	ECE-B1EV100S
A2C9	290-0534-00			CAP,FXD,ELCTLT:1UF,20%,35V	05397	T368A105M035AZ
A2C12	281-0661-00			CAP,FXD,CER DI:0.8PF,+/-0.1PF,500V	59660	0301-080C0K08088
A2C14	281-0503-00			CAP,FXD,CER DI:8PF,+/-0.5PF,500V	59660	301-000C0H0-8090
A2C15	283-0005-00			CAP,FXD,CER DI:0.01UF,+100-0%,250V	04222	SR303E103ZAA
A2C20	281-0505-00			CAP,FXD,CER DI:12PF,10%,500V	59660	301-000C0G0-120K
A2C21	283-0299-00			CAP,FXD,CER DI:51PF,5%,500V	51642	200-500-NP0-510J
A2C22	283-0299-00			CAP,FXD,CER DI:51PF,5%,500V	51642	200-500-NP0-510J
A2C23	281-0812-00			CAP,FXD,CER DI:1000PF,10%,100V	04222	MA101C102KAA
A2C30	281-0813-00			CAP,FXD,CER DI:0.047UF,20%,50V	05397	C412C473M5V2CA
A2C34	281-0525-00			CAP,FXD,CER DI:470PF,+/-94PF,500V	59660	301000X5U471M
A2C35	281-0551-00			CAP,FXD,CER DI:390PF,10%,500V	59660	301-000X5P0-391K
A2C37	281-0773-00			CAP,FXD,CER DI:0.01UF,10%,100V	04222	MA201C103KAA
A2C43	283-0203-00			CAP,FXD,CER DI:0.47UF,20%,50V	04222	SR305SC474MAA
A2C46	281-0792-00			CAP,FXD,CER DI:82PF,10%,100V	04222	MA101A820KAA
A2C51	283-0111-00			CAP,FXD,CER DI:0.1UF,20%,50V	05397	C330C104M5U1CA
A2C52	283-0111-00			CAP,FXD,CER DI:0.1UF,20%,50V	05397	C330C104M5U1CA
A2C53	283-0773-00			CAP,FXD,MICA DI:578 PF,1%,300V	00853	D153F5780F0
A2C56	283-0341-00			CAP,FXD,CER DI:0.047UF,10%,100V	04222	3430100C473K
A2C57	283-0203-00			CAP,FXD,CER DI:0.47UF,20%,50V	04222	SR305SC474MAA
A2C65	283-0005-00			CAP,FXD,CER DI:0.01UF,+100-0%,250V	04222	SR303E103ZAA
A2C66	283-0111-00			CAP,FXD,CER DI:0.1UF,20%,50V	05397	C330C104M5U1CA
A2C67	281-0773-00			CAP,FXD,CER DI:0.01UF,10%,100V	04222	MA201C103KAA
A2C68	283-0195-00			CAP,FXD,CER DI:680PF,5%,50V	04222	SR205A681JAA
A2C69	281-0773-00			CAP,FXD,CER DI:0.01UF,10%,100V	04222	MA201C103KAA
A2C71	281-0773-00			CAP,FXD,CER DI:0.01UF,10%,100V	04222	MA201C103KAA
A2C72	290-0580-00			CAP,FXD,ELCTLT:0.27UF,20%,50V	05397	T368A274M050AZ
A2C73	283-0114-00			CAP,FXD,CER DI:1500PF,5%,200V	59660	805-534-Y5D0152J
A2C74	283-0114-00			CAP,FXD,CER DI:1500PF,5%,200V	59660	805-534-Y5D0152J
A2C75	281-0773-00			CAP,FXD,CER DI:0.01UF,10%,100V	04222	MA201C103KAA
A2C76	290-0580-00			CAP,FXD,ELCTLT:0.27UF,20%,50V	05397	T368A274M050AZ
A2C84	281-0773-00			CAP,FXD,CER DI:0.01UF,10%,100V	04222	MA201C103KAA
A2C85	283-0111-00			CAP,FXD,CER DI:0.1UF,20%,50V	05397	C330C104M5U1CA
A2C88	281-0773-00			CAP,FXD,CER DI:0.01UF,10%,100V	04222	MA201C103KAA
A2C89	281-0786-00			CAP,FXD,CER DI:150PF,10%,100V	04222	MA101A151KAA
A2C92	281-0773-00			CAP,FXD,CER DI:0.01UF,10%,100V	04222	MA201C103KAA
A2C99	281-0786-00			CAP,FXD,CER DI:150PF,10%,100V	04222	MA101A151KAA
A2CR23	152-0141-02			SEMICOND DVC,DI:SW,SI,30V,150MA,30V,DO-35	03508	DA2527 (1N4152)
A2CR24	152-0141-02			SEMICOND DVC,DI:SW,SI,30V,150MA,30V,DO-35	03508	DA2527 (1N4152)
A2CR53	152-0141-02			SEMICOND DVC,DI:SW,SI,30V,150MA,30V,DO-35	03508	DA2527 (1N4152)
A2CR55	152-0141-02			SEMICOND DVC,DI:SW,SI,30V,150MA,30V,DO-35	03508	DA2527 (1N4152)
A2CR71	152-0141-02			SEMICOND DVC,DI:SW,SI,30V,150MA,30V,DO-35	03508	DA2527 (1N4152)
A2CR75	152-0141-02			SEMICOND DVC,DI:SW,SI,30V,150MA,30V,DO-35	03508	DA2527 (1N4152)
A2LR3	108-0543-00			COIL,RF:FIXED,1.1UH	80009	108-0543-00
A2LR5	108-0537-00			COIL,RF:FIXED,200UH	80009	108-0537-00
A2LR7	108-0543-00			COIL,RF:FIXED,1.1UH	80009	108-0543-00
A2LR70	108-0328-00			COIL,RF:FIXED,0.3UH	80009	108-0328-00
A2LR75	108-0328-00			COIL,RF:FIXED,0.3UH	80009	108-0328-00
A2Q22	151-1042-00			SEMICOND DVC SE:FET,SI,TO-92	04713	SPF627M2
A2Q48	151-0190-00			TRANSISTOR:NPN,SI,TO-92	80009	151-0190-00
A2Q88	151-0223-00			TRANSISTOR:NPN,SI,TO-92	04713	SPS8026
A2Q92	151-0221-00			TRANSISTOR:PNP,SI,TO-92	04713	SPS246
A2Q96	151-0221-00			TRANSISTOR:PNP,SI,TO-92	04713	SPS246
A2Q98	151-0342-00			TRANSISTOR:PNP,SI,TO-92	07263	S035928
A2R8	315-0622-00			RES,FXD,CMPSN:6.2K OHM,5%,0.25W	19701	5043CX6K200J
A2R9	315-0102-00			RES,FXD,CMPSN:1K OHM,5%,0.25W	57668	NTR25JE01K0

Component No.	Tektronix Part No.	Serial/Assembly No. Effective	Dscont	Name & Description	Mfr. Code	Mfr. Part No.
A2R12	315-0915-00			RES,FXD,CMPSN:9.1M OHM,5%,0.25W	01121	CB9155
A2R13	317-0470-00			RES,FXD,CMPSN:47 OHM,5%,0.125W	01121	BB4705
A2R14	315-0105-00			RES,FXD,CMPSN:1M OHM,5%,0.25W	19701	5043CX1M000J
A2R15	315-0824-00			RES,FXD,CMPSN:820K OHM,5%,0.25W	19701	5043CX820K0J
A2R16	315-0274-00			RES,FXD,CMPSN:270K OHM,5%,0.25W	57668	NTR25J-E270K
A2R19	315-0274-00			RES,FXD,CMPSN:270K OHM,5%,0.25W	57668	NTR25J-E270K
A2R20	315-0103-00			RES,FXD,CMPSN:10K OHM,5%,0.25W	19701	5043CX10K00J
A2R21	315-0510-00			RES,FXD,CMPSN:51 OHM,5%,0.25W	19701	5043CX51R00J
A2R22	315-0272-00			RES,FXD,CMPSN:2.7K OHM,5%,0.25W	57668	NTR25J-E02K7
A2R23	315-0751-00			RES,FXD,CMPSN:750 OHM,5%,0.25W	57668	NTR25J-E750E
A2R29	315-0222-00			RES,FXD,CMPSN:2.2K OHM,5%,0.25W	57668	NTR25J-E02K2
A2R30	315-0104-00			RES,FXD,CMPSN:100K OHM,5%,0.25W	57668	NTR25J-E100K
A2R31	315-0202-00			RES,FXD,CMPSN:2K OHM,5%,0.25W	57668	NTR25J-E 2K
A2R32	315-0510-00			RES,FXD,CMPSN:51 OHM,5%,0.25W	19701	5043CX51R00J
A2R33	315-0202-00			RES,FXD,CMPSN:2K OHM,5%,0.25W	57668	NTR25J-E 2K
A2R34	315-0203-00			RES,FXD,CMPSN:20K OHM,5%,0.25W	57668	NTR25J-E 20K
A2R35	315-0203-00			RES,FXD,CMPSN:20K OHM,5%,0.25W	57668	NTR25J-E 20K
A2R36	315-0203-00			RES,FXD,CMPSN:20K OHM,5%,0.25W	57668	NTR25J-E 20K
A2R37	315-0560-00			RES,FXD,CMPSN:56 OHM,5%,0.25W	57668	NTR25J-E56E0
A2R38	317-0101-00			RES,FXD,CMPSN:100 OHM,5%,0.125W	01121	BB1015
A2R41	315-0102-00			RES,FXD,CMPSN:1K OHM,5%,0.25W	57668	NTR25JE01K0
A2R42	315-0473-00			RES,FXD,CMPSN:47K OHM,5%,0.25W	57668	NTR25J-E47K0
A2R43	315-0752-00			RES,FXD,CMPSN:7.5K OHM,5%,0.25W	57668	NTR25J-E07K5
A2R44	315-0103-00			RES,FXD,CMPSN:10K OHM,5%,0.25W	19701	5043CX10K00J
A2R45	315-0102-00			RES,FXD,CMPSN:1K OHM,5%,0.25W	57668	NTR25JE01K0
A2R47	315-0101-00			RES,FXD,CMPSN:100 OHM,5%,0.25W	57668	NTR25J-E 100E
A2R48	315-0682-00			RES,FXD,CMPSN:6.8K OHM,5%,0.25W	57668	NTR25J-E06K8
A2R49	311-1564-00			RES,VAR,NONWW:TRMR,500 OHM,0.5W	32997	3352T-CK5-501
A2R50	315-0133-00			RES,FXD,CMPSN:13K OHM,5%,0.25W	19701	5043CX13K00J
A2R51	321-0274-00			RES,FXD,FILM:6.98K OHM,1%,0.125W,TC=T0	19701	5043ED6K980F
A2R52	321-0431-00			RES,FXD,FILM:301K OHM,1%,0.125W,TC=T0	07716	CEA030102F
A2R53	315-0124-00			RES,FXD,CMPSN:120K OHM,5%,0.25W	19701	5043CX120K0J
A2R54	315-0622-00			RES,FXD,CMPSN:6.2K OHM,5%,0.25W	19701	5043CX6K200J
A2R55	315-0202-00			RES,FXD,CMPSN:2K OHM,5%,0.25W	57668	NTR25J-E 2K
A2R56	315-0104-00			RES,FXD,CMPSN:100K OHM,5%,0.25W	57668	NTR25J-E100K
A2R57	315-0104-00			RES,FXD,CMPSN:100K OHM,5%,0.25W	57668	NTR25J-E100K
A2R58	321-0443-00			RES,FXD,FILM:402K OHM,1%,0.125W,TC=T0	19701	5043ED402K0F
A2R59	321-0443-00			RES,FXD,FILM:402K OHM,1%,0.125W,TC=T0	19701	5043ED402K0F
A2R61	315-0203-00			RES,FXD,CMPSN:20K OHM,5%,0.25W	57668	NTR25J-E 20K
A2R62	315-0512-00			RES,FXD,CMPSN:5.1K OHM,5%,0.25W	57668	NTR25J-E05K1
A2R63	315-0152-00			RES,FXD,CMPSN:1.5K OHM,5%,0.25W	57668	NTR25J-E01K5
A2R64	315-0123-00			RES,FXD,CMPSN:12K OHM,5%,0.25W	57668	NTR25J-E12K0
A2R65	315-0511-00			RES,FXD,CMPSN:510 OHM,5%,0.25W	19701	5043CX510R0J
A2R67	323-0155-00			RES,FXD,FILM:402 OHM,1%,0.5W,TC=T0	75042	CECT0-4020F
A2R68	315-0162-00			RES,FXD,CMPSN:1.6K OHM,5%,0.25W	19701	5043CX1K600J
A2R69	315-0820-00			RES,FXD,CMPSN:82 OHM,5%,0.25W	57668	NTR25J-E82E0
A2R72	315-0205-00			RES,FXD,CMPSN:2M OHM,5%,0.25W	01121	CB2055
A2R73	315-0514-00			RES,FXD,CMPSN:510K OHM,5%,0.25W	19701	5043CX510K0J
A2R74	315-0514-00			RES,FXD,CMPSN:510K OHM,5%,0.25W	19701	5043CX510K0J
A2R76	315-0205-00			RES,FXD,CMPSN:2M OHM,5%,0.25W	01121	CB2055
A2R80	311-1228-00			RES,VAR,NONWW:TRMR,10K OHM,0.5W	32997	3386F-T04-103
A2R83	315-0470-00			RES,FXD,CMPSN:47 OHM,5%,0.25W	57668	NTR25J-E47E0
A2R84	315-0680-00			RES,FXD,CMPSN:68 OHM,5%,0.25W	57668	NTR25J-E68E0
A2R85	311-1594-00			RES,VAR,NONWW:TRMR,10 OHM,0.5W	32997	3352T-1-100
A2R86	315-0470-00			RES,FXD,CMPSN:47 OHM,5%,0.25W	57668	NTR25J-E47E0
A2R89	315-0103-00			RES,FXD,CMPSN:10K OHM,5%,0.25W	19701	5043CX10K00J
A2R90	315-0102-00			RES,FXD,CMPSN:1K OHM,5%,0.25W	57668	NTR25JE01K0
A2R91	315-0470-00			RES,FXD,CMPSN:47 OHM,5%,0.25W	57668	NTR25J-E47E0
A2R92	315-0102-00			RES,FXD,CMPSN:1K OHM,5%,0.25W	57668	NTR25JE01K0

Component No.	Tektronix Part No.	Serial/Assembly No. Effective	Dscont	Name & Description	Mfr. Code	Mfr. Part No.
A2R93	321-0260-00			RES,FXD,FILM:4.99K OHM,1%,0.125W,TC=TO	19701	5033ED4K990F
A2R94	321-0202-00			RES,FXD,FILM:1.24K OHM,1%,0.125W,TC=TO	24546	NA55D1241F
A2R95	315-0470-00			RES,FXD,CMPSN:47 OHM,5%,0.25W	57668	NTR25J-E47E0
A2R96	315-0470-00			RES,FXD,CMPSN:47 OHM,5%,0.25W	57668	NTR25J-E47E0
A2R97	315-0221-00			RES,FXD,CMPSN:220 OHM,5%,0.25W	57668	NTR25J-E220E
A2S10	263-0010-01			SWITCH PB ASSY:1 PUSH,7.5 MM,1 CONTACT	80009	263-0010-01
A2S20	263-0016-00			SWITCH PB ASSY:4 LATCHING,7.5 MM,5 CONTACT SAFETY CONTROLLED	80009	263-0016-00
A2S50	263-0015-00			SWITCH PB ASSY:3 LATCHING,7.5 MM	80009	263-0015-00
A2U35	156-0067-02			MICROCKT,LINEAR:OPNL AMPL,SELECTED	02735	85147
A2U55	156-0158-00			MICROCKT,LINEAR:DUAL OPNL AMPL	04713	MC1458P1/MC1458U
A2U65	155-0126-00			MICROCKT,LINEAR:TRIGGER AMPLIFIER	80009	155-0126-00
A2U75	156-0158-00			MICROCKT,LINEAR:DUAL OPNL AMPL	04713	MC1458P1/MC1458U
A2U85	155-0109-01			MICROCKT,LINEAR:MONOLITHIC TRIG	80009	155-0109-01

Component No.	Tektronix Part No.	Serial/Assembly No. Effective	Dscont	Name & Description	Mfr. Code	Mfr. Part No.
A3	670-4183-00			CIRCUIT BD ASSY:READOUT	80009	670-4183-00
A3CR725	152-0141-02			SEMICOND DVC,DI:SW,SI,30V,150MA,30V,DO-35	03508	DA2527 (1N4152)
A3CR751	152-0141-02			SEMICOND DVC,DI:SW,SI,30V,150MA,30V,DO-35	03508	DA2527 (1N4152)
A3CR752	152-0141-02			SEMICOND DVC,DI:SW,SI,30V,150MA,30V,DO-35	03508	DA2527 (1N4152)
A3CR753	152-0141-02			SEMICOND DVC,DI:SW,SI,30V,150MA,30V,DO-35	03508	DA2527 (1N4152)
A3CR754	152-0141-02			SEMICOND DVC,DI:SW,SI,30V,150MA,30V,DO-35	03508	DA2527 (1N4152)
A3CR763	152-0141-02			SEMICOND DVC,DI:SW,SI,30V,150MA,30V,DO-35	03508	DA2527 (1N4152)
A3CR772	152-0141-02			SEMICOND DVC,DI:SW,SI,30V,150MA,30V,DO-35	03508	DA2527 (1N4152)
A3CR773	152-0141-02			SEMICOND DVC,DI:SW,SI,30V,150MA,30V,DO-35	03508	DA2527 (1N4152)
A3CR782	152-0141-02			SEMICOND DVC,DI:SW,SI,30V,150MA,30V,DO-35	03508	DA2527 (1N4152)
A3CR783	152-0141-02			SEMICOND DVC,DI:SW,SI,30V,150MA,30V,DO-35	03508	DA2527 (1N4152)
A3CR785	152-0141-02			SEMICOND DVC,DI:SW,SI,30V,150MA,30V,DO-35	03508	DA2527 (1N4152)
A3CR786	152-0141-02			SEMICOND DVC,DI:SW,SI,30V,150MA,30V,DO-35	03508	DA2527 (1N4152)
A3R751	315-0154-00			RES,FXD,CMPSN:150K OHM,5%,0.25W	57668	NTR25J-E150K
A3R752	315-0154-00			RES,FXD,CMPSN:150K OHM,5%,0.25W	57668	NTR25J-E150K
A3R753	315-0154-00			RES,FXD,CMPSN:150K OHM,5%,0.25W	57668	NTR25J-E150K
A3R754	315-0154-00			RES,FXD,CMPSN:150K OHM,5%,0.25W	57668	NTR25J-E150K
A3R755	321-0344-00			RES,FXD,FILM:37.4K OHM,1%,0.125W,TC=T0	19701	5033ED 37K40F
A3R756	315-0753-00			RES,FXD,CMPSN:75K OHM,5%,0.25W	57668	NTR25J-E75K0
A3R757	321-0327-00			RES,FXD,FILM:24.9K OHM,1%,0.125W,TC=T0	07716	CEAD24901F
A3R761	315-0154-00			RES,FXD,CMPSN:150K OHM,5%,0.25W	57668	NTR25J-E150K
A3R762	315-0154-00			RES,FXD,CMPSN:150K OHM,5%,0.25W	57668	NTR25J-E150K
A3R763	315-0133-00			RES,FXD,CMPSN:13K OHM,5%,0.25W	19701	5043CX13K00J
A3R764	315-0133-00			RES,FXD,CMPSN:13K OHM,5%,0.25W	19701	5043CX13K00J
A3R771	315-0753-00			RES,FXD,CMPSN:75K OHM,5%,0.25W	57668	NTR25J-E75K0
A3R772	321-0356-00			RES,FXD,FILM:49.9K OHM,1%,0.125W,TC=T0	19701	5033ED49K90F
A3R773	315-0154-00			RES,FXD,CMPSN:150K OHM,5%,0.25W	57668	NTR25J-E150K
A3R779	315-0151-00			RES,FXD,CMPSN:150 OHM,5%,0.25W	57668	NTR25J-E150E
A3R781	315-0154-00			RES,FXD,CMPSN:150K OHM,5%,0.25W	57668	NTR25J-E150K
A3R782	315-0753-00			RES,FXD,CMPSN:75K OHM,5%,0.25W	57668	NTR25J-E75K0
A3R783	315-0154-00			RES,FXD,CMPSN:150K OHM,5%,0.25W	57668	NTR25J-E150K
A3R784	321-0356-00			RES,FXD,FILM:49.9K OHM,1%,0.125W,TC=T0	19701	5033ED49K90F
A3R785	315-0154-00			RES,FXD,CMPSN:150K OHM,5%,0.25W	57668	NTR25J-E150K
A3R786	315-0753-00			RES,FXD,CMPSN:75K OHM,5%,0.25W	57668	NTR25J-E75K0
A3R787	321-0356-00			RES,FXD,FILM:49.9K OHM,1%,0.125W,TC=T0	19701	5033ED49K90F
A3R791	321-0344-00			RES,FXD,FILM:37.4K OHM,1%,0.125W,TC=T0	19701	5033ED 37K40F
A3R792	315-0154-00			RES,FXD,CMPSN:150K OHM,5%,0.25W	57668	NTR25J-E150K
A3R793	321-0344-00			RES,FXD,FILM:37.4K OHM,1%,0.125W,TC=T0	19701	5033ED 37K40F
A3R794	315-0154-00			RES,FXD,CMPSN:150K OHM,5%,0.25W	57668	NTR25J-E150K

Component No.	Tektronix Part No.	Serial/Assembly No. Effective	Dscont	Name & Description	Mfr. Code	Mfr. Part No.
A4	670-6184-00	B010100	B023314	CIRCUIT BD ASSY:CLOCK	80009	670-6184-00
A4	670-6184-01	B023315		CIRCUIT BD ASSY:CLOCK	80009	670-6184-01
A4C535	281-0775-00			CAP,FXD,CER DI:0.1UF,20%,50V	04222	MA205E104MAA
A4C536	283-0211-00			CAP,FXD,CER DI:0.1UF,10%,200V	04222	SR406C104KAA
A4C540	281-0775-00			CAP,FXD,CER DI:0.1UF,20%,50V	04222	MA205E104MAA
A4C541	281-0775-00			CAP,FXD,CER DI:0.1UF,20%,50V	04222	MA205E104MAA
A4C547	285-0809-00			CAP,FXD,PLASTIC:1UF,10%,50V	56289	LP66A1A105K
A4C552	281-0762-00	B010100	B023314	CAP,FXD,CER DI:27PF,20%,100V	04222	MA101A270MAA
A4C556	281-0775-00			CAP,FXD,CER DI:0.1UF,20%,50V	04222	MA205E104MAA
A4C559	281-0773-00			CAP,FXD,CER DI:0.01UF,10%,100V	04222	MA201C103KAA
A4C583	283-0691-00			CAP,FXD,MICA DI:650PF,1%,300V	00853	D153F651F0
A4C622	281-0775-00			CAP,FXD,CER DI:0.1UF,20%,50V	04222	MA205E104MAA
A4C625	281-0775-00	B010121		CAP,FXD,CER DI:0.1UF,20%,50V	04222	MA205E104MAA
A4C626	281-0811-00	B010100	B010120	CAP,FXD,CER DI:10PF,10%,100V	04222	MA101A100KAA
A4C627	281-0762-00	B010100	B010120	CAP,FXD,CER DI:27PF,20%,100V	04222	MA101A270MAA
A4C631	290-0748-00			CAP,FXD,ELCTLT:10UF,+50-10%,25V	54473	ECE-B1EV100S
A4C632	281-0775-00			CAP,FXD,CER DI:0.1UF,20%,50V	04222	MA205E104MAA
A4C633	290-0748-00			CAP,FXD,ELCTLT:10UF,+50-10%,25V	54473	ECE-B1EV100S
A4C634	290-0748-00			CAP,FXD,ELCTLT:10UF,+50-10%,25V	54473	ECE-B1EV100S
A4C641	281-0770-00			CAP,FXD,CER DI:1000PF,20%,100V	04222	MA101C102MAA
A4C642	281-0775-00			CAP,FXD,CER DI:0.1UF,20%,50V	04222	MA205E104MAA
A4C643	281-0775-00			CAP,FXD,CER DI:0.1UF,20%,50V	04222	MA205E104MAA
A4C655	281-0775-00			CAP,FXD,CER DI:0.1UF,20%,50V	04222	MA205E104MAA
A4C660	281-0775-00			CAP,FXD,CER DI:0.1UF,20%,50V	04222	MA205E104MAA
A4C661	281-0775-00			CAP,FXD,CER DI:0.1UF,20%,50V	04222	MA205E104MAA
A4C663	281-0775-00			CAP,FXD,CER DI:0.1UF,20%,50V	04222	MA205E104MAA
A4C668	281-0775-00			CAP,FXD,CER DI:0.1UF,20%,50V	04222	MA205E104MAA
A4CR544	152-0141-02			SEMICOND DVC,DI:SM,SI,30V,150MA,30V,DO-35	03508	DA2527 (1N4152)
A4CR547	152-0141-02			SEMICOND DVC,DI:SM,SI,30V,150MA,30V,DO-35	03508	DA2527 (1N4152)
A4CR552	152-0141-02			SEMICOND DVC,DI:SM,SI,30V,150MA,30V,DO-35	03508	DA2527 (1N4152)
A4CR554	152-0141-02			SEMICOND DVC,DI:SM,SI,30V,150MA,30V,DO-35	03508	DA2527 (1N4152)
A4CR555	152-0141-02			SEMICOND DVC,DI:SM,SI,30V,150MA,30V,DO-35	03508	DA2527 (1N4152)
A4CR640	152-0141-02			SEMICOND DVC,DI:SM,SI,30V,150MA,30V,DO-35	03508	DA2527 (1N4152)
A4CR641	152-0141-02			SEMICOND DVC,DI:SM,SI,30V,150MA,30V,DO-35	03508	DA2527 (1N4152)
A4CR677	152-0141-02			SEMICOND DVC,DI:SM,SI,30V,150MA,30V,DO-35	03508	DA2527 (1N4152)
A4CR678	152-0141-02			SEMICOND DVC,DI:SM,SI,30V,150MA,30V,DO-35	03508	DA2527 (1N4152)
A4CR679	152-0141-02			SEMICOND DVC,DI:SM,SI,30V,150MA,30V,DO-35	03508	DA2527 (1N4152)
A4CR680	152-0141-02			SEMICOND DVC,DI:SM,SI,30V,150MA,30V,DO-35	03508	DA2527 (1N4152)
A4CR691	152-0322-00			SEMICOND DVC,DI:SCHOTTKY BARRIER,SI,15V	21847	A2X600
A4CR695	152-0141-02			SEMICOND DVC,DI:SM,SI,30V,150MA,30V,DO-35	03508	DA2527 (1N4152)
A4L631	108-0543-00			COIL,RF:FIXED,1.1UH	80009	108-0543-00
A4L632	108-0537-00			COIL,RF:FIXED,200UH	80009	108-0537-00
A4L634	108-0543-00			COIL,RF:FIXED,1.1UH	80009	108-0543-00
A4LR626	108-0797-00	B010121		COIL,RF:FIXED,2.45UH	80009	108-0797-00
A4Q531	151-0410-00			TRANSISTOR:PNP,SI,TO-92	04713	SPS6765
A4Q545	151-0410-00			TRANSISTOR:PNP,SI,TO-92	04713	SPS6765
A4Q552	151-0301-00			TRANSISTOR:PNP,SI,TO-18	04713	ST898
A4Q607	151-0190-00			TRANSISTOR:NPN,SI,TO-92	80009	151-0190-00
A4Q642	151-1042-00			SEMICOND DVC SE:FET,SI,TO-92	04713	SPF627M2
A4Q643	----------			(PART OF Q642)		
A4Q663	151-0192-00			TRANSISTOR:SELECTED	04713	SPS8801
A4Q667	151-0192-00			TRANSISTOR:SELECTED	04713	SPS8801
A4Q671	151-0192-00			TRANSISTOR:SELECTED	04713	SPS8801
A4Q678	151-0192-00			TRANSISTOR:SELECTED	04713	SPS8801
A4Q680	151-0192-00			TRANSISTOR:SELECTED	04713	SPS8801
A4Q681	151-0192-00			TRANSISTOR:SELECTED	04713	SPS8801
A4Q687	151-0188-00			TRANSISTOR:PNP,SI,TO-92	80009	151-0188-00
A4Q691	151-0192-00			TRANSISTOR:SELECTED	04713	SPS8801
A4Q695	151-0192-00			TRANSISTOR:SELECTED	04713	SPS8801

Component No.	Tektronix Part No.	Serial/Assembly No. Effective	Dscont	Name & Description	Mfr. Code	Mfr. Part No.
A4R523	315-0101-00			RES,FXD,CMPSN:100 OHM,5%,0.25W	57668	NTR25J-E 100E
A4R529	315-0102-00			RES,FXD,CMPSN:1K OHM,5%,0.25W	57668	NTR25JE01K0
A4R530	311-1560-00			RES,VAR,NONWW:TRMR,5K OHM,0.5W	32997	3352T-1-502
A4R531	321-0340-00			RES,FXD,FILM:34.0K OHM,1%,0.125W,TC=T0	19701	5043ED34K00F
A4R532	315-0511-00			RES,FXD,CMPSN:510 OHM,5%,0.25W	19701	5043CX510R0J
A4R533	315-0512-00			RES,FXD,CMPSN:5.1K OHM,5%,0.25W	57668	NTR25J-E05K1
A4R536	315-0101-00			RES,FXD,CMPSN:100 OHM,5%,0.25W	57668	NTR25J-E 100E
A4R537	321-0360-00			RES,FXD,FILM:54.9K OHM,1%,0.125W,TC=T0	19701	5033ED54K90F
A4R538	311-1336-00			RES,VAR,NONWW:TRMR,100K OHM,0.5W	02111	43P104T672
A4R539	321-0995-00			RES,FXD,FILM:549K OHM,1%,0.125W,TC=T0	24546	NA55D5493F
A4R540	315-0100-00			RES,FXD,CMPSN:10 OHM,5%,0.25W	19701	5043CX10RR00J
A4R541	315-0100-00			RES,FXD,CMPSN:10 OHM,5%,0.25W	19701	5043CX10RR00J
A4R544	321-0820-06			RES,FXD,FILM:42K OHM,0.25%,0.125W,TC=T9	19701	5033RE42K00C
A4R545	321-0259-00			RES,FXD,FILM:4.87K OHM,1%,0.125W,TC=T0	07716	CEAD48700F
A4R546	321-0289-00			RES,FXD,FILM:10.0K OHM,1%,0.125W,TC=T0	19701	5033ED10K0F
A4R547	321-0289-00			RES,FXD,FILM:10.0K OHM,1%,0.125W,TC=T0	19701	5033ED10K0F
A4R548	315-0513-00			RES,FXD,CMPSN:51K OHM,5%,0.25W	57668	NTR25J-E51K0
A4R549	315-0101-00			RES,FXD,CMPSN:100 OHM,5%,0.25W	57668	NTR25J-E 100E
A4R550	311-1230-00			RES,VAR,NONWW:TRMR,20K OHM,0.5W	32997	3386F-T04-203
A4R551	315-0104-00	B010100	B023314	RES,FXD,CMPSN:100K OHM,5%,0.25W	57668	NTR25J-E100K
A4R551	315-0823-00	B023315		RES,FXD,CMPSN:82K OHM,5%,0.25W	57668	NTR25J-E82K
A4R552	315-0182-00			RES,FXD,CMPSN:1.8K OHM,5%,0.25W	57668	NTR25J-E1K8
A4R553	315-0391-00			RES,FXD,CMPSN:390 OHM,5%,0.25W	57668	NTR25J-E390E
A4R554	315-0392-00			RES,FXD,CMPSN:3.9K OHM,5%,0.25W	57668	NTR25J-E03K9
A4R555	315-0222-00			RES,FXD,CMPSN:2.2K OHM,5%,0.25W	57668	NTR25J-E02K2
A4R556	315-0563-00			RES,FXD,CMPSN:56K OHM,5%,0.25W	19701	5043CX56K00J
A4R557	315-0103-00			RES,FXD,CMPSN:10K OHM,5%,0.25W	19701	5043CX10K00J
A4R558	315-0331-00			RES,FXD,CMPSN:330 OHM,5%,0.25W	57668	NTR25J-E330E
A4R559	321-1651-04			RES,FXD,FILM:37.5K OHM,0.1%,0.125W,TC=T2	91637	MFF1816D37501B
A4R581	315-0202-00			RES,FXD,CMPSN:2K OHM,5%,0.25W	57668	NTR25J-E 2K
A4R582	315-0332-00			RES,FXD,CMPSN:3.3K OHM,5%,0.25W	57668	NTR25J-E03K3
A4R591	315-0101-00			RES,FXD,CMPSN:100 OHM,5%,0.25W	57668	NTR25J-E 100E
A4R606	307-0542-00			RES NTWK,FXD,FI:(5)10K OHM,5%,0.125W	01121	106A1030R706A103
A4R607	315-0103-00			RES,FXD,CMPSN:10K OHM,5%,0.25W	19701	5043CX10K00J
A4R608	315-0512-00			RES,FXD,CMPSN:5.1K OHM,5%,0.25W	57668	NTR25J-E05K1
A4R611	315-0102-00			RES,FXD,CMPSN:1K OHM,5%,0.25W	57668	NTR25JE01K0
A4R621	315-0473-00			RES,FXD,CMPSN:47K OHM,5%,0.25W	57668	NTR25J-E47K0
A4R622	315-0203-00			RES,FXD,CMPSN:20K OHM,5%,0.25W	57668	NTR25J-E 20K
A4R623	315-0473-00			RES,FXD,CMPSN:47K OHM,5%,0.25W	57668	NTR25J-E47K0
A4R624	315-0203-00			RES,FXD,CMPSN:20K OHM,5%,0.25W	57668	NTR25J-E 20K
A4R626	315-0751-00			RES,FXD,CMPSN:750 OHM,5%,0.25W	57668	NTR25J-E750E
A4R627	315-0751-00			RES,FXD,CMPSN:750 OHM,5%,0.25W	57668	NTR25J-E750E
A4R640	315-0104-00			RES,FXD,CMPSN:100K OHM,5%,0.25W	57668	NTR25J-E100K
A4R641	315-0104-00			RES,FXD,CMPSN:100K OHM,5%,0.25W	57668	NTR25J-E100K
A4R642	315-0100-00			RES,FXD,CMPSN:10 OHM,5%,0.25W	19701	5043CX10RR00J
A4R643	315-0100-00			RES,FXD,CMPSN:10 OHM,5%,0.25W	19701	5043CX10RR00J
A4R644	315-0103-00			RES,FXD,CMPSN:10K OHM,5%,0.25W	19701	5043CX10K00J
A4R645	315-0154-00			RES,FXD,CMPSN:150K OHM,5%,0.25W	57668	NTR25J-E150K
A4R646	315-0103-00			RES,FXD,CMPSN:10K OHM,5%,0.25W	19701	5043CX10K00J
A4R647	315-0753-00			RES,FXD,CMPSN:75K OHM,5%,0.25W	57668	NTR25J-E75K0
A4R648	315-0820-00			RES,FXD,CMPSN:82 OHM,5%,0.25W	57668	NTR25J-E82E0
A4R649	315-0201-00			RES,FXD,CMPSN:200 OHM,5%,0.25W	57668	NTR25J-E200E
A4R660	315-0471-00			RES,FXD,CMPSN:470 OHM,5%,0.25W	57668	NTR25J-E470E
A4R663	315-0510-00			RES,FXD,CMPSN:51 OHM,5%,0.25W	19701	5043CX51R00J
A4R664	321-0169-00			RES,FXD,FILM:562 OHM,1%,0.125W,TC=T0	07716	CEAD562R0F
A4R667	321-0239-00			RES,FXD,FILM:3.01K OHM,1%,0.125W,TC=T0	19701	5043ED3K010F
A4R668	321-0237-00			RES,FXD,FILM:2.87K OHM,1%,0.125W,TC=T0	07716	CEAD 28700F
A4R669	321-0218-00			RES,FXD,FILM:1.82K OHM,1%,0.125W,TC=T0	19701	5033ED1K82F
A4R671	315-0510-00			RES,FXD,CMPSN:51 OHM,5%,0.25W	19701	5043CX51R00J

Component No.	Tektronix Part No.	Serial/Assembly No. Effective	Dscont	Name & Description	Mfr. Code	Mfr. Part No.
A4R672	301-0102-00			RES,FXD,CMPSN:1K OHM,5%,0.50M	01121	EB1025
A4R673	315-0510-00			RES,FXD,CMPSN:51 OHM,5%,0.25M	19701	5043CX51R00J
A4R677	315-0102-00			RES,FXD,CMPSN:1K OHM,5%,0.25M	57668	NTR25JE01K0
A4R678	315-0202-00			RES,FXD,CMPSN:2K OHM,5%,0.25M	57668	NTR25J-E 2K
A4R680	315-0103-00			RES,FXD,CMPSN:10K OHM,5%,0.25M	19701	5043CX10K00J
A4R681	315-0153-00			RES,FXD,CMPSN:15K OHM,5%,0.25M	19701	5043CX15K00J
A4R682	315-0302-00			RES,FXD,CMPSN:3K OHM,5%,0.25M	57668	NTR25J-E03K0
A4R683	315-0302-00			RES,FXD,CMPSN:3K OHM,5%,0.25M	57668	NTR25J-E03K0
A4R684	315-0102-00			RES,FXD,CMPSN:1K OHM,5%,0.25M	57668	NTR25JE01K0
A4R687	315-0162-00			RES,FXD,CMPSN:1.6K OHM,5%,0.25M	19701	5043CX1K600J
A4R688	315-0203-00			RES,FXD,CMPSN:20K OHM,5%,0.25M	57668	NTR25J-E 20K
A4R689	315-0154-00			RES,FXD,CMPSN:150K OHM,5%,0.25M	57668	NTR25J-E150K
A4R692	315-0104-00			RES,FXD,CMPSN:100K OHM,5%,0.25M	57668	NTR25J-E100K
A4R694	315-0102-00			RES,FXD,CMPSN:1K OHM,5%,0.25M	57668	NTR25JE01K0
A4R695	315-0103-00			RES,FXD,CMPSN:10K OHM,5%,0.25M	19701	5043CX10K00J
A4S645	263-0015-02			SWITCH PB ASSY:3 LCH,7.5MM,6 CONTACTS	80009	263-0015-02
A4U535	156-0158-00			MICROCKT,LINEAR:DUAL OPNL AMPL	04713	MC1458P1/MC1458U
A4U545	156-1149-01			MICROCKT,LINEAR:OPERATION AMP JFET INPUT	27014	AL160307
A4U547	156-0105-02	B010100	B023314	MICROCKT,LINEAR:OPNL AMPL,SELECTED	01295	LM301AJG4
A4U547	156-1149-01	B023315		MICROCKT,LINEAR:OPERATION AMP JFET INPUT	27014	AL160307
A4U556	156-0382-02			MICROCKT,DGTL:QUAD 2 INP NAND GATE BURN	18324	N74LS00NB
A4U590	155-0185-00			MICROCKT,INTFC:ML 4 DECADE DGTL VOLTMETER	80009	155-0185-00
A4U621	156-0180-04			MICROCKT,DGTL:QUAD 2 INP NAND GATE,	18324	N74S00(NB OR FB)
A4U622	156-0382-02			MICROCKT,DGTL:QUAD 2 INP NAND GATE BURN	18324	N74LS00NB
A4U623	156-0721-02			MICROCKT,DGTL:QUAD ST 2-INP NAND GATES,SCRN	01295	SN74LS132NP3
A4U635	156-0646-02			MICROCKT,DGTL:4-BIT BINARY CNTR,SCRN	04713	SN74LS93NDS
A4U636	156-0656-02			MICROCKT,DGTL:DECADE COUNTER,SCRN	01295	SN74LS90NP3
A4U637	156-0994-00			MICROCKT,DGTL:8 INPUT DATA SEL/MUX	04713	74LS151(N OR J)
A4U638	156-0994-00			MICROCKT,DGTL:8 INPUT DATA SEL/MUX	04713	74LS151(N OR J)
A4U651	156-0910-02			MICROCKT,DGTL:DUAL DECADE COUNTER,SCRN	01295	SN74LS390N3
A4U652	156-0910-02			MICROCKT,DGTL:DUAL DECADE COUNTER,SCRN	01295	SN74LS390N3
A4U653	156-0910-02			MICROCKT,DGTL:DUAL DECADE COUNTER,SCRN	01295	SN74LS390N3
A4U654	156-0910-02			MICROCKT,DGTL:DUAL DECADE COUNTER,SCRN	01295	SN74LS390N3
A4U655	156-0994-00			MICROCKT,DGTL:8 INPUT DATA SEL/MUX	04713	74LS151(N OR J)
A4U660	156-0299-02			MICROCKT,DGTL:TTL,16-BIT DATA SELECTOR	18324	N74150(NB OR FB)
A4VR552	152-0217-00			SEMICOND DVC,DI:ZEN,SI,8.2V,5%,0.4W,DO-7	04713	SZG20
A4W627	131-0566-00	B010121		BUS,COND:DUMMY RES,0.094 OD X 0.225 L	24546	OMA 07
A4Y626	158-0203-00			XTAL UNIT,QTZ:20.48MHZ,0.01%,SERIES	14301	X#1943

Component No.	Tektronix Part No.	Serial/Assembly No. Effective	Dscont	Name & Description	Mfr. Code	Mfr. Part No.
C211	283-0672-00			CAP,FXD,MICA DI:200PF,1%,500V	00853	D155F2010F0
C215	290-0523-00			CAP,FXD,ELCTLT:2.2UF,20%,20V	05397	T368A225M020AS
C330	281-0166-00			CAP,VAR,AIR DI:1.9-15.7 PF,250V	74970	187-0109-055
C331	283-0633-00			CAP,FXD,MICA DI:77PF,1%,100V	00853	D155E770F0
C332	295-0172-00			CAP SET,MATCHED:0.1UF,10UF,898PF,MATCHED	80009	295-0172-00
C334	295-0172-00			CAP SET,MATCHED:0.1UF,10UF,898PF,MATCHED	80009	295-0172-00
C336	------ ------			(PART OF C332)		
DS220	150-1029-00			LT EMITTING DIO:GREEN,565NM,35MA	58361	Q6480/MV5274C
DS232	150-1033-00			LT EMITTING DIO:AMBER,585NM,40MA MAX	50434	HLMP 1401
DS810	150-0048-01			LAMP,INCAND:5V,0.06A,#683,AGED & SEL	58854	683AS15
DS820	150-0048-01			LAMP,INCAND:5V,0.06A,#683,AGED & SEL	58854	683AS15
J2	131-1315-01			CONN,RCPT,ELEC:BNC,FEMALE	80009	131-1315-01
J640	131-1315-01			CONN,RCPT,ELEC:BNC,FEMALE	80009	131-1315-01
L326	108-0271-00			COIL,RF:FIXED,235NH	80009	108-0271-00
Q732	151-0410-00			TRANSISTOR:PNP,SI,TO-92	04713	SPS6765
R60	311-1192-00			RES,VAR,NONWW:PNL,10K OHM,1W,W/SW	12697	381-CM39695
R210	311-0467-00			RES,VAR,NONWW:PNL,100K OHM,0.5W	01121	W7705B
R330	315-0330-00			RES,FXD,CMPSN:33 OHM,5%,0.25W	19701	5043CX33R00J
R331	315-0330-00			RES,FXD,CMPSN:33 OHM,5%,0.25W	19701	5043CX33R00J
R332	315-0560-00			RES,FXD,CMPSN:56 OHM,5%,0.25W	57668	NTR25J-E56E0
R410	311-1781-00			RES,VAR,NONWW:PNL,10K OHM,10%,0.5W	12697	388CM40913
R534	321-0193-00			RES,FXD,FILM:1K OHM,1%,0.125W,TC=TO	19701	5033ED1K00F
R535	311-1889-00			RES,VAR,NW:PNL,50K OHM,2W	32997	3541S-458-503
R705	311-0467-00			RES,VAR,NONWW:PNL,100K OHM,0.5W	01121	W7705B
R725	311-1590-00			RES,VAR,NONWW:PNL,10K OHM,1W,COMPOSITION	12697	CM40256
R732	315-0104-00			RES,FXD,CMPSN:100K OHM,5%,0.25W	57668	NTR25J-E100K
S60	------ ------			(PART OF R60)		
S230	263-0016-01			SWITCH PB ASSY:3 LCH & 1 CANC,7.5MM,5 CONT	80009	263-0016-01
S725	214-1136-00			ACTUATOR,SL SW:VARIABLE CAL	80009	214-1136-00
S800	263-1181-00			SW CAM ACTR AS:TIME/CM	80009	263-1181-00

DIAGRAMS AND CIRCUIT BOARD ILLUSTRATIONS

Symbols and Reference Designators

Electrical components shown on the diagrams are in the following units unless noted otherwise:

Capacitors = Values one or greater are in picofarads (pF). Values less than one are in microfarads (μF).

Resistors = Ohms (Ω).

Graphic symbols and class designation letters are based on ANSI Standard Y32.2-1975.

Logic symbology is based on ANSI Y32.14-1973 in terms of positive logic. Logic symbols depict the logic function performed and may differ from the manufacturer's data.

The overline on a signal name indicates that the signal performs its intended function when it goes to the low state.

Abbreviations are based on ANSI Y1.1-1972.

Other ANSI standards that are used in the preparation of diagrams by Tektronix, Inc. are:

Y14.15, 1966	Drafting Practices.
Y14.2, 1973	Line Conventions and Lettering.
Y10.5, 1968	Letter Symbols for Quantities Used in Electrical Science and Electrical Engineering.

The following prefix letters are used as reference designators to identify components or assemblies on the diagrams.

A	Assembly, separable or repairable (circuit board, etc)	H	Heat dissipating device (heat sink, heat radiator, etc)	S	Switch or contactor
AT	Attenuator, fixed or variable	HR	Heater	T	Transformer
B	Motor	HY	Hybrid circuit	TC	Thermocouple
BT	Battery	J	Connector, stationary portion	TP	Test point
C	Capacitor, fixed or variable	K	Relay	U	Assembly, inseparable or non-repairable (integrated circuit, etc.)
CB	Circuit breaker	L	Inductor, fixed or variable	V	Electron tube
CR	Diode, signal or rectifier	M	Meter	VR	Voltage regulator (zener diode, etc.)
DL	Delay line	P	Connector, movable portion	W	Wirestrap or cable
DS	Indicating device (lamp)	Q	Transistor or silicon-controlled rectifier	Y	Crystal
E	Spark Gap, Ferrite bead	R	Resistor, fixed or variable	Z	Phase shifter
F	Fuse	RT	Thermistor		
FL	Filter				

The following special symbols may appear on the diagrams:

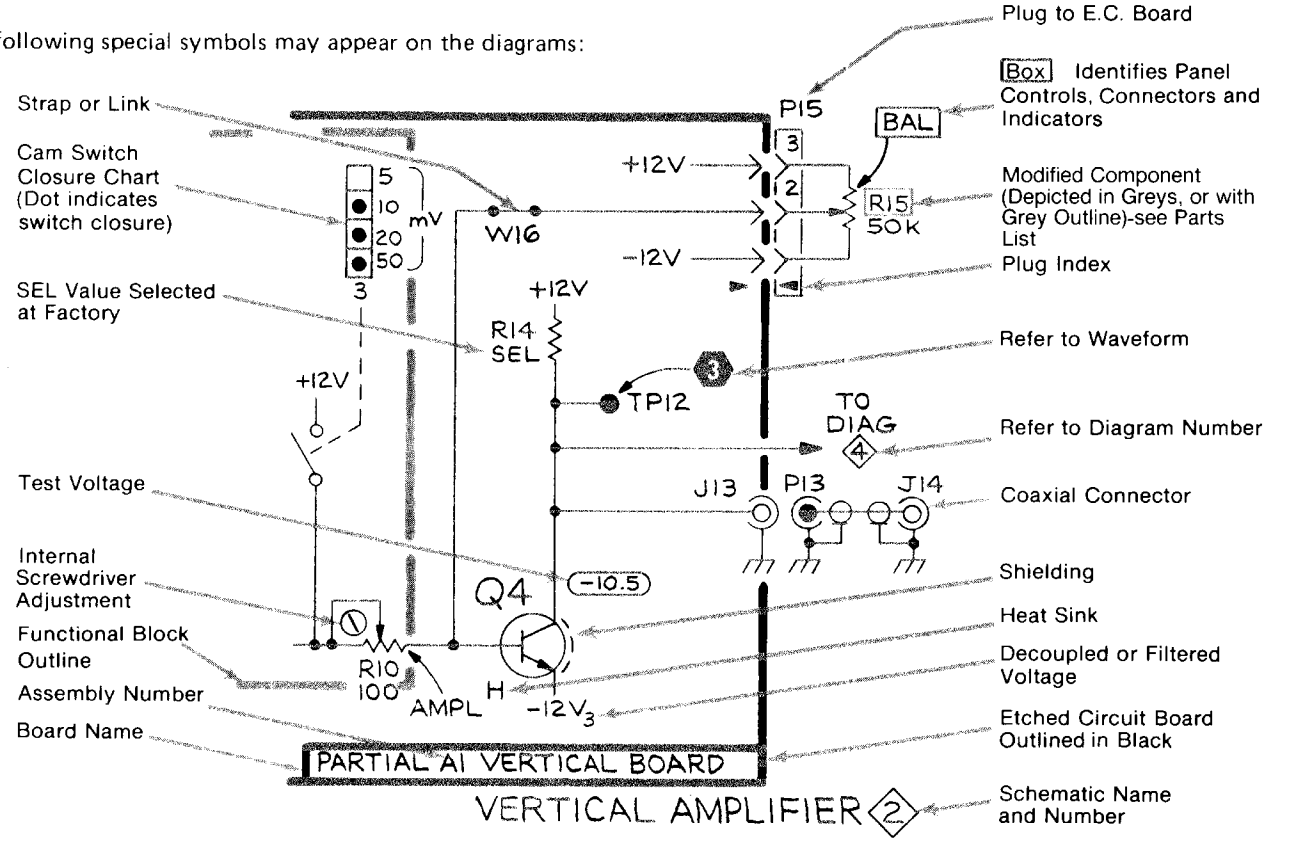

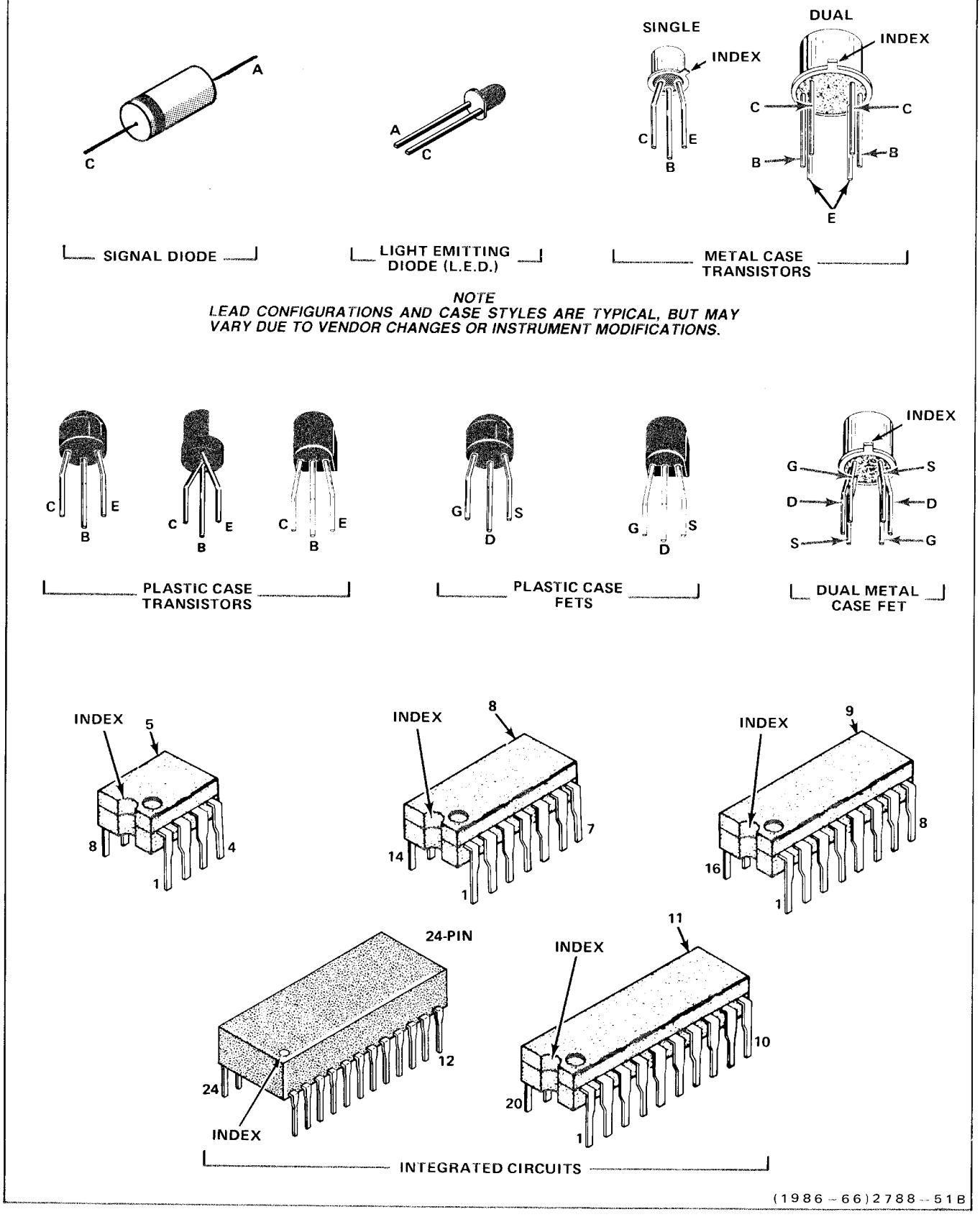

Figure 8-1. Semiconductor Lead Configurations.

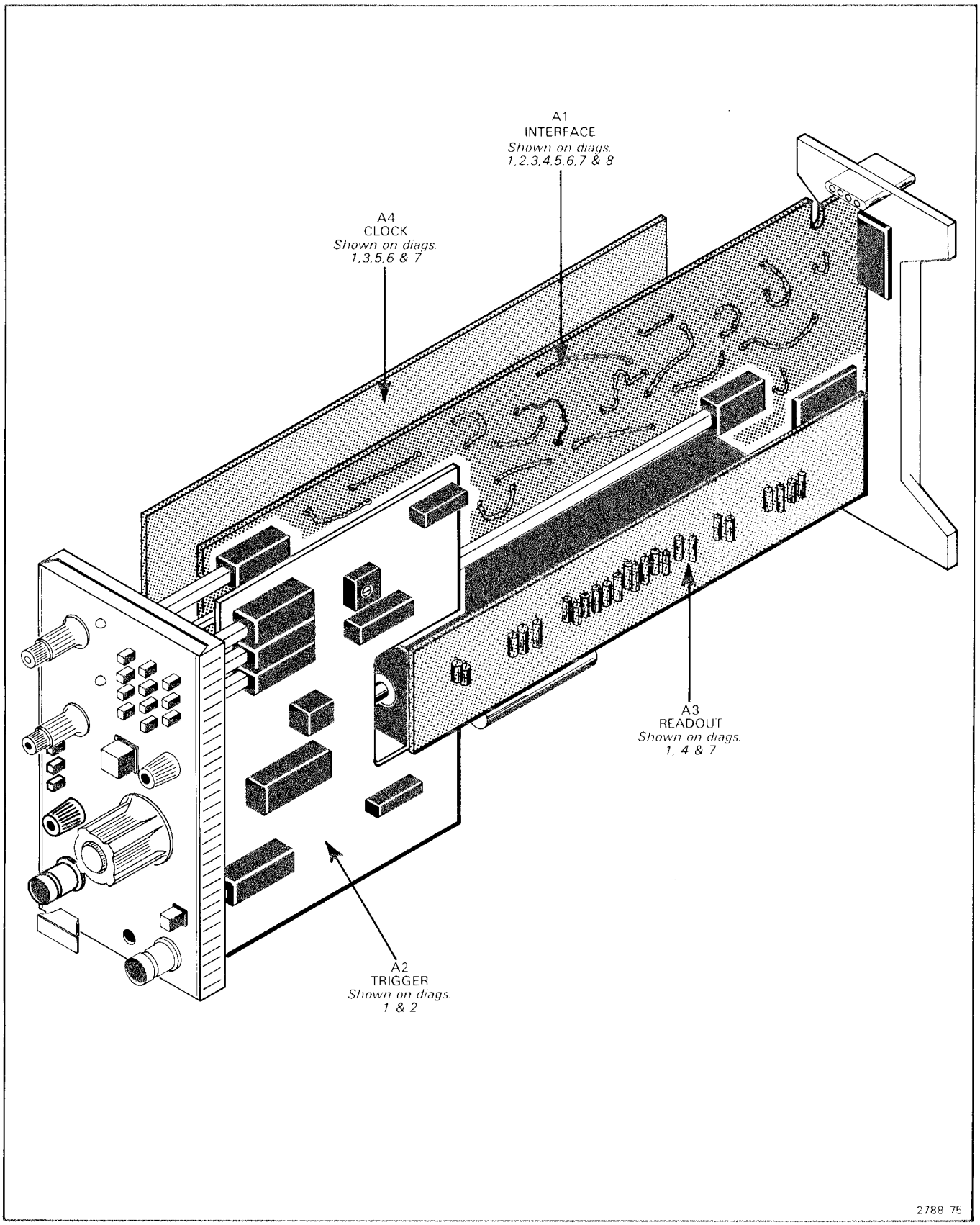

Figure 8-2. Locations of circuit boards in the 7B87.

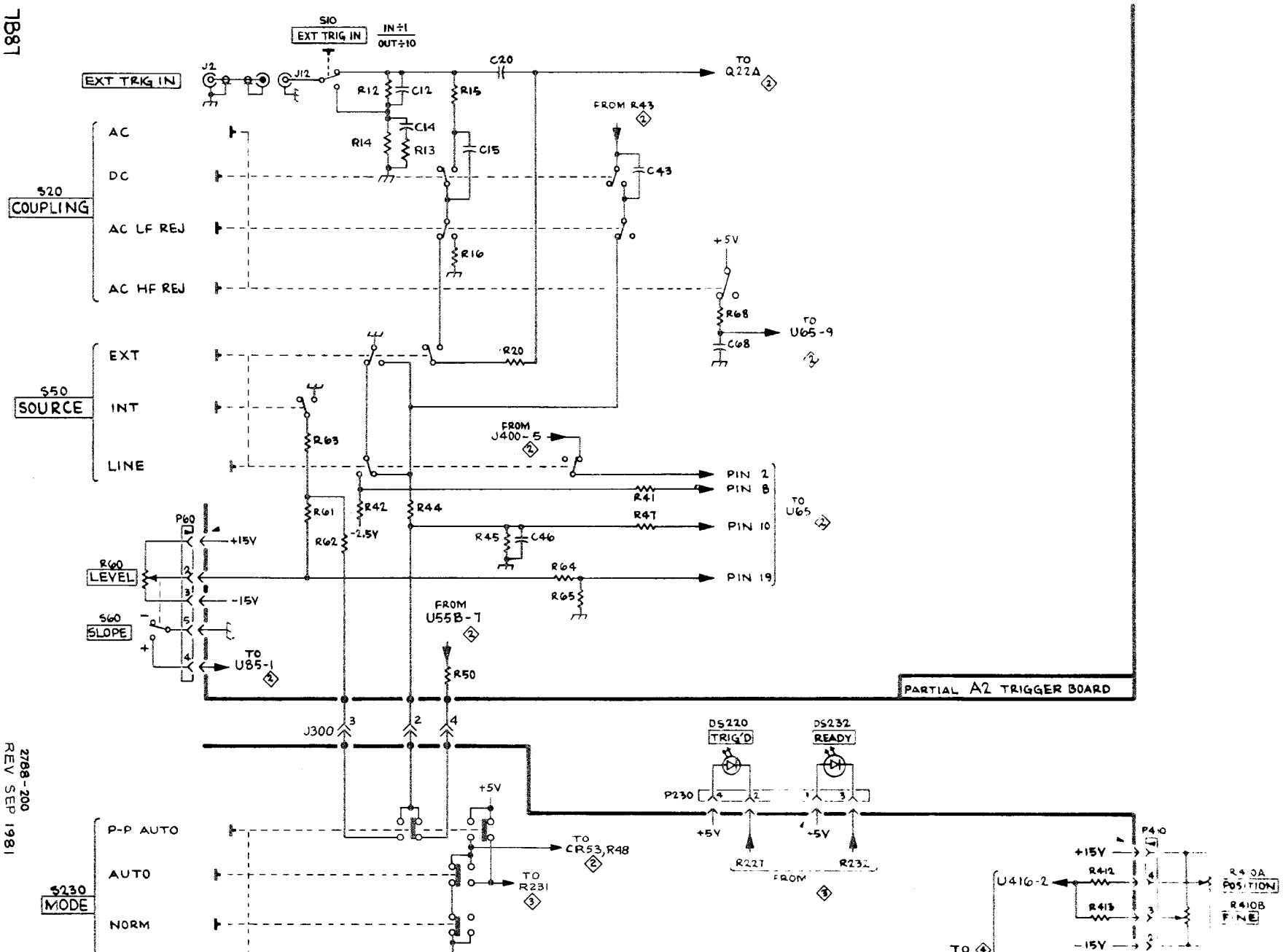
S10
EXT TRIG IN
IN÷1
OUT÷10
EXT TRIG IN
J2
J12
C20
TO Q22A
R12
C12
R15
FROM R43
C14
R14
R13
C15
C43
S20
COUPLING
AC
DC
AC LF REJ
AC HF REJ
R16
+5V
R68
TO U65-9
C68
R20
EXT
S50
SOURCE
INT
LINE
R63
FROM J400-5
PIN 2
PIN 8
R41
TO U65
R61
R42
R44
R47
PIN 10
P60
+15V
R62
-2.5V
R45
C46
R60
LEVEL
R64
PIN 19
R65
-15V
S60
SLOPE
FROM U55B-7
TO U85-1
R50
PARTIAL A2 TRIGGER BOARD
J300
DS220
TRIG'D
DS232
READY
P230
+5V
R227
R232
FROM
S230
MODE
P-P AUTO
AUTO
NORM
TO CR53,R48
TO R231
P40
+15V
R412
R413
R410A
POSITION
R410B
FINE
U416-2
-15V
TO

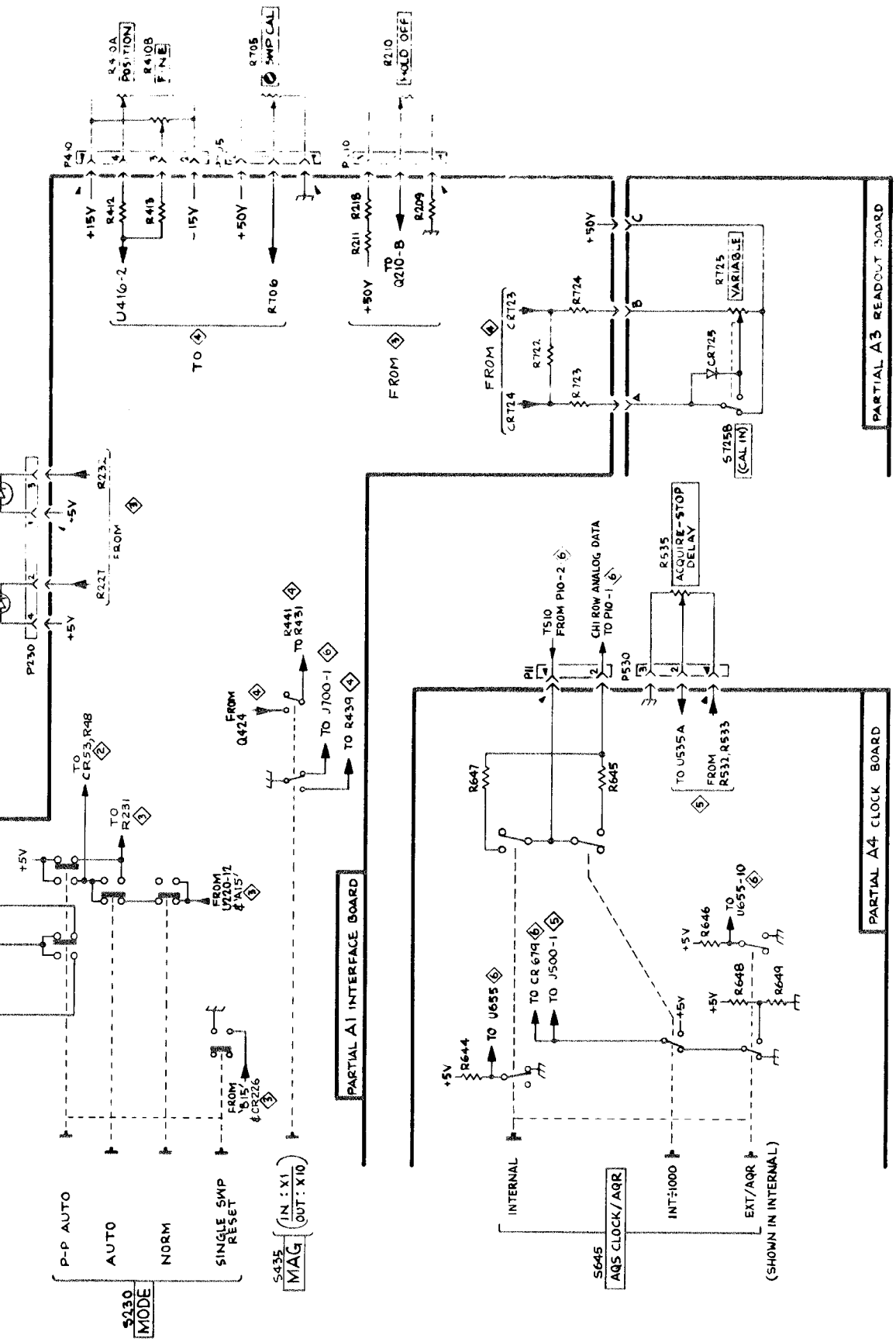

FRONT PANEL DISTRIBUTION 1

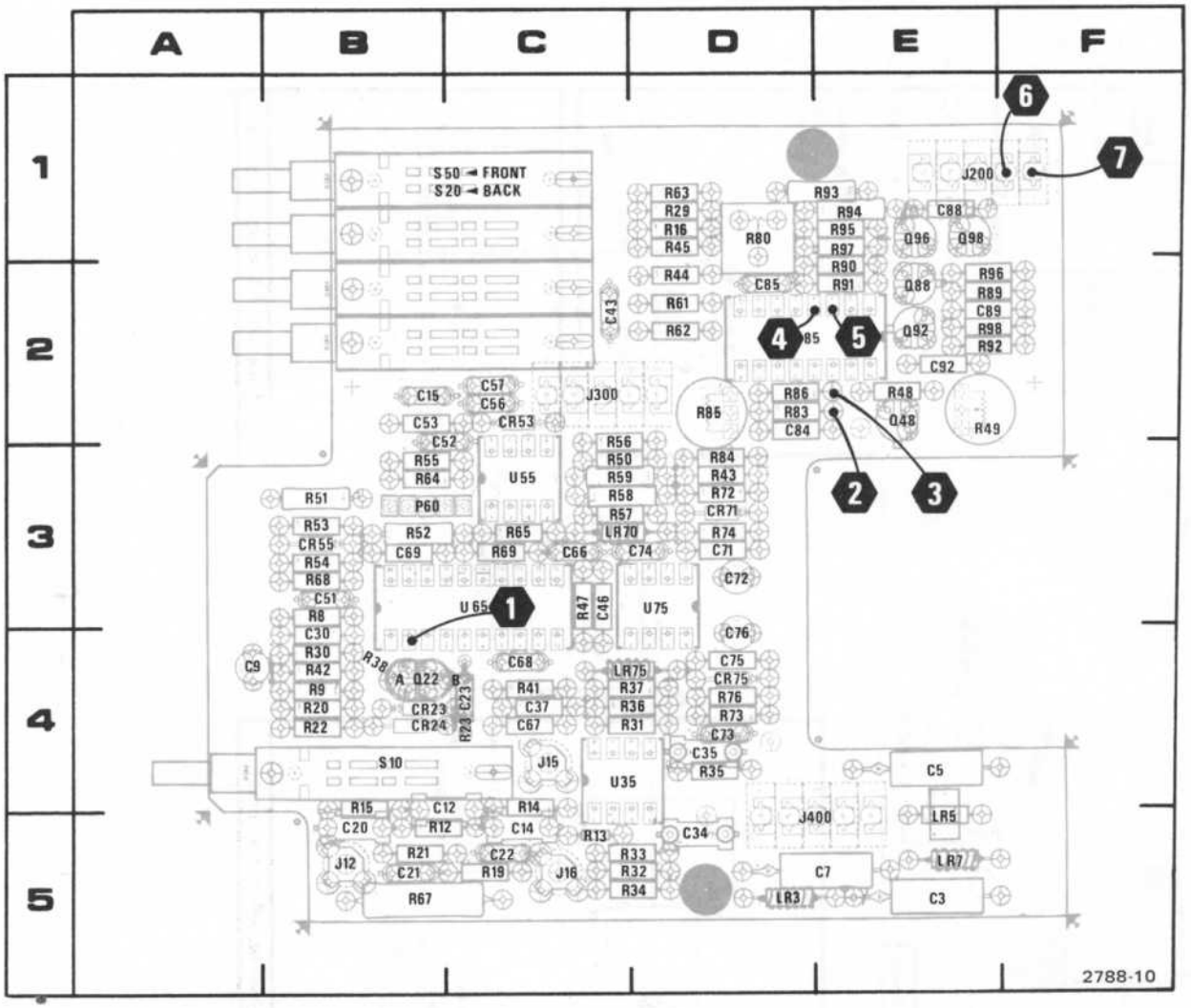

Figure 8-3. A2-Trigger circuit board assembly.

CKT NO

C3
C5
C7
C9
C12
C14
C15
C20
C21
C22
C23
C30
C34
C35
C37
C43
C46
C51
C52
C53
C56
C57
C66
C67
C68
C69
C71
C72
C73
C74
C75
C76
C84
C85
C88
C89
C92

CKT NO	GRID COORD	CKT NO	GRID COORD	CKT NO	GRID COORD	CKT NO	GRID COORD
C3	5E	C92	2E	R15	4B	R62	2D
C5	4E			R16	1D	R63	1D
C7	5E	CR23	4B	R19	5C	R64	3B
C9	4A	CR24	4B	R20	4B	R65	3C
C12	4B	CR53	2C	R21	5B	R67	5B
C14	5C	CR55	3B	R22	4B	R68	3B
C15	2B	CR71	3D	R23	4C	R69	3C
C20	5B	CR75	4D	R29	1D	R72	3D
C21	5B			R30	4B	R73	4D
C22	5C	J12	5B	R31	4D	R74	3D
C23	4C	J15	4C	R32	5D	R76	4D
C30	4B	J16	5C	R33	5D	R80	1D
C34	5D	J200	1E	R34	5D	R83	2D
C35	4D	J300	2C	R35	4D	R84	3D
C37	4C	J400	5D	R36	4D	R85	2D
C43	2C			R37	4D	R86	2D
C46	3C	LR3	5D	R38	4B	R89	2E
C51	3B	LR5	5E	R41	4C	R90	2E
C52	2B	LR7	5E	R42	4B	R91	2E
C53	2B	LR70	3C	R43	3D	R92	2E
C56	2C	LR75	4D	R44	2D	R93	1E
C57	2C			R45	1D	R94	1E
C66	3C	P60	3B	R47	3C	R95	1E
C67	4C			R48	2E	R96	2E
C68	4C	Q22	4B	R49	2E	R97	1E
C69	3B	Q48	2E	R50	3C	R98	2E
C71	3D	Q88	2E	R51	3B		
C72	3D	Q92	2E	R52	3B	S10	4B
C73	4D	Q96	1E	R53	3B	S20	1C
C74	3D	Q98	1E	R54	3B	S50	1C
C75	4D			R55	3B		
C76	4D	R8	3B	R56	2C	U35	4C
C84	2D	R9	4B	R57	3C	U55	3C
C85	2D	R12	5B	R58	3C	U65	3C
C88	1E	R13	5C	R59	3C	U75	3D
C89	2E	R14	4C	R61	2D	U85	2D

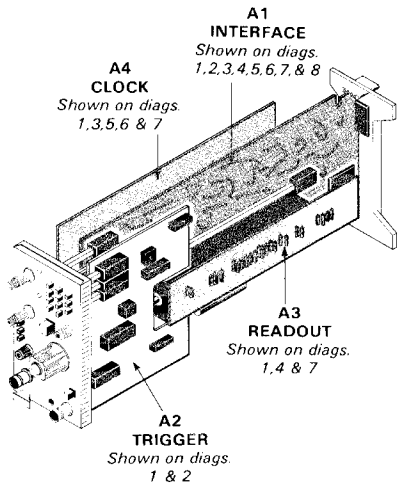

VOLTAGE AND WAVEFORM CONDITIONS

The voltages and waveforms shown were obtained with the 7B87 installed in the B HORIZ compartment and controls set as follows:

TIME/DIV, 1 ms; VARIABLE (CAL IN), knob in; MAX, X1 (button in); HOLD OFF, fully counterclockwise; SWP CAL, midranged; POSITION, midranged; TRIGGERING: LEVEL, midranged; MODE, P-P AUTO; COUPLING, AC; SOURCE, LINE; SLOPE, +; ACQUIRE-STOP DELAY, counterclockwise.

Voltage Conditions. The voltages shown on the diagram were obtained using a digital multimeter with a 10 MΩ input impedance (Tektronix DM 501 Digital Multimeter or Tektronix 7D13 Digital Multimeter used with readout equipped, 7000-series oscilloscope).

Waveform Conditions. The waveforms shown below were obtained using a test oscilloscope system with 10 MΩ input impedance and at least 60 MHz bandwidth (Tektronix 7603 Oscilloscope, 7B53A Time Base, and 7A13 Differential Comparator equipped with 10X probe).

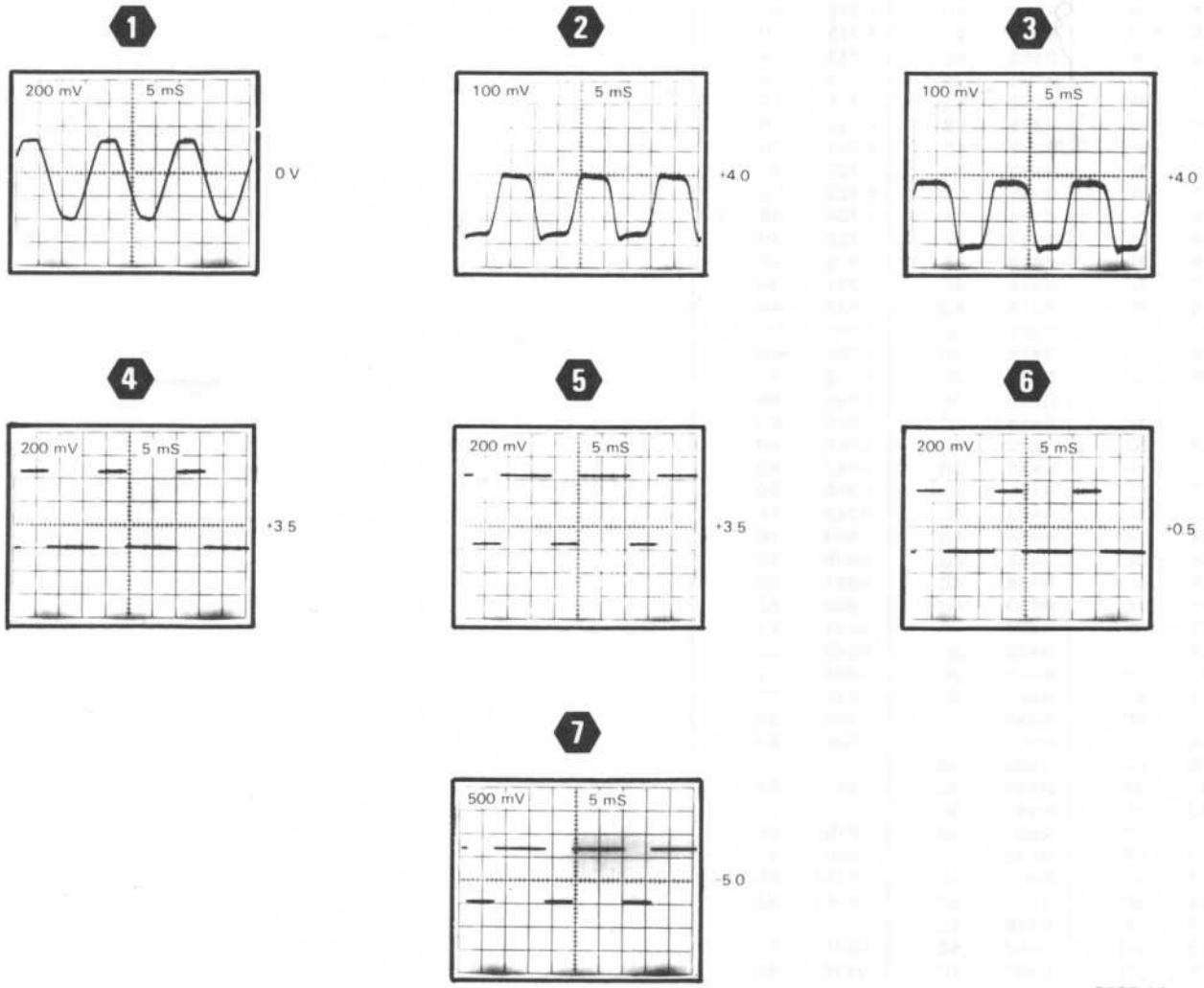

2788-11

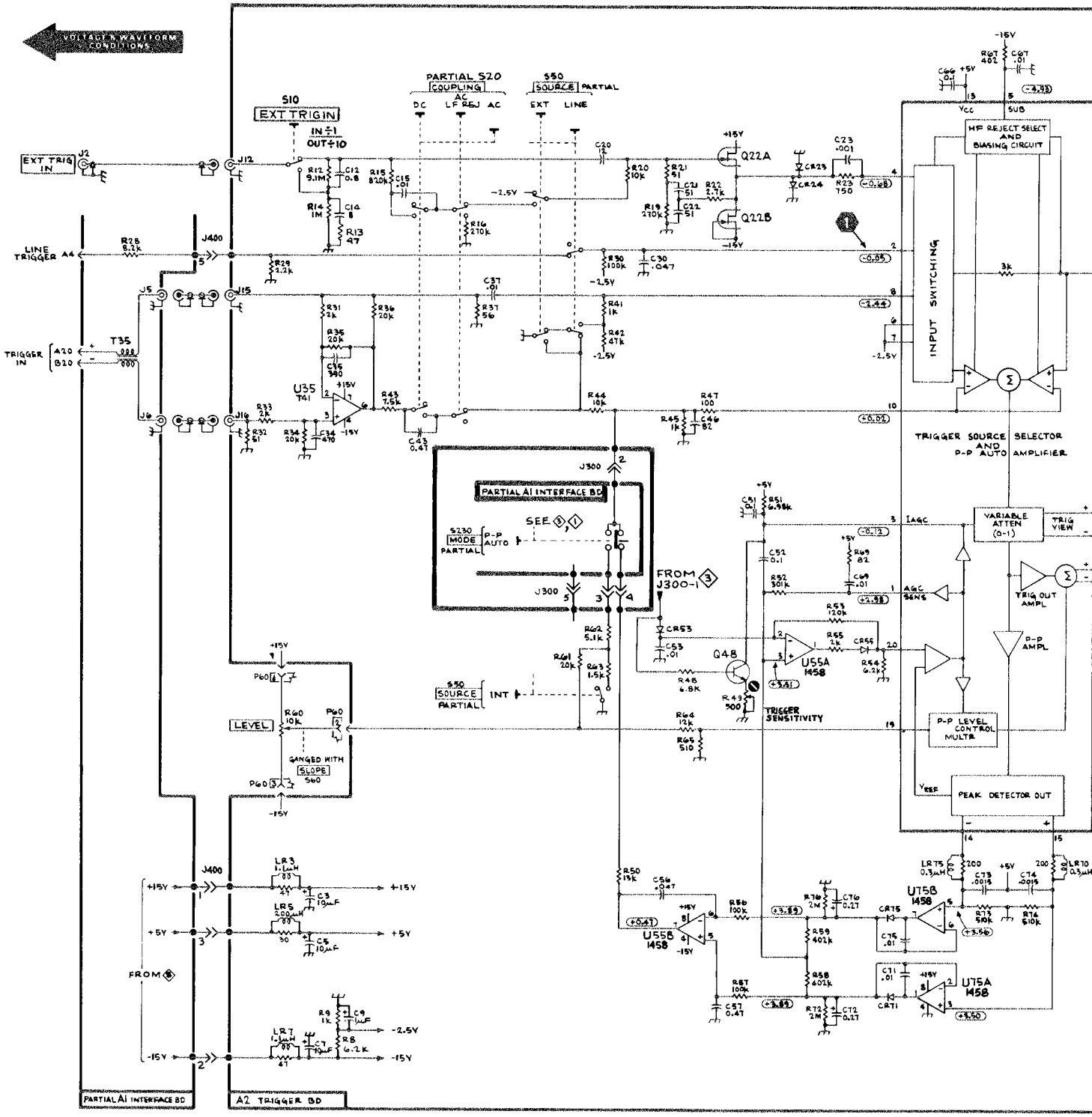

7B87

2788-201
REV SEP 1981

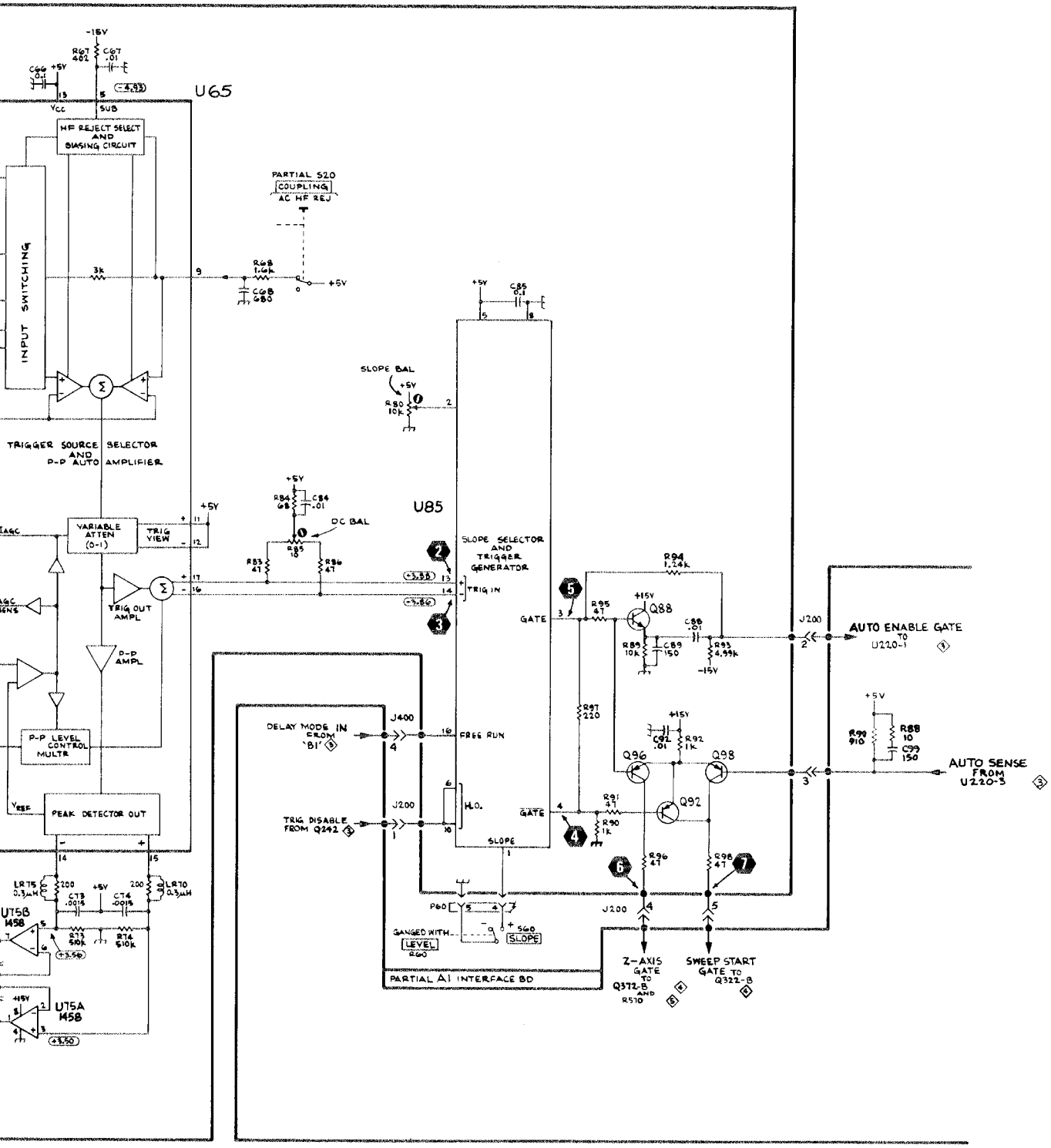

2788-201
REV SEP 1981

TRIGGER GENERATOR ◇2

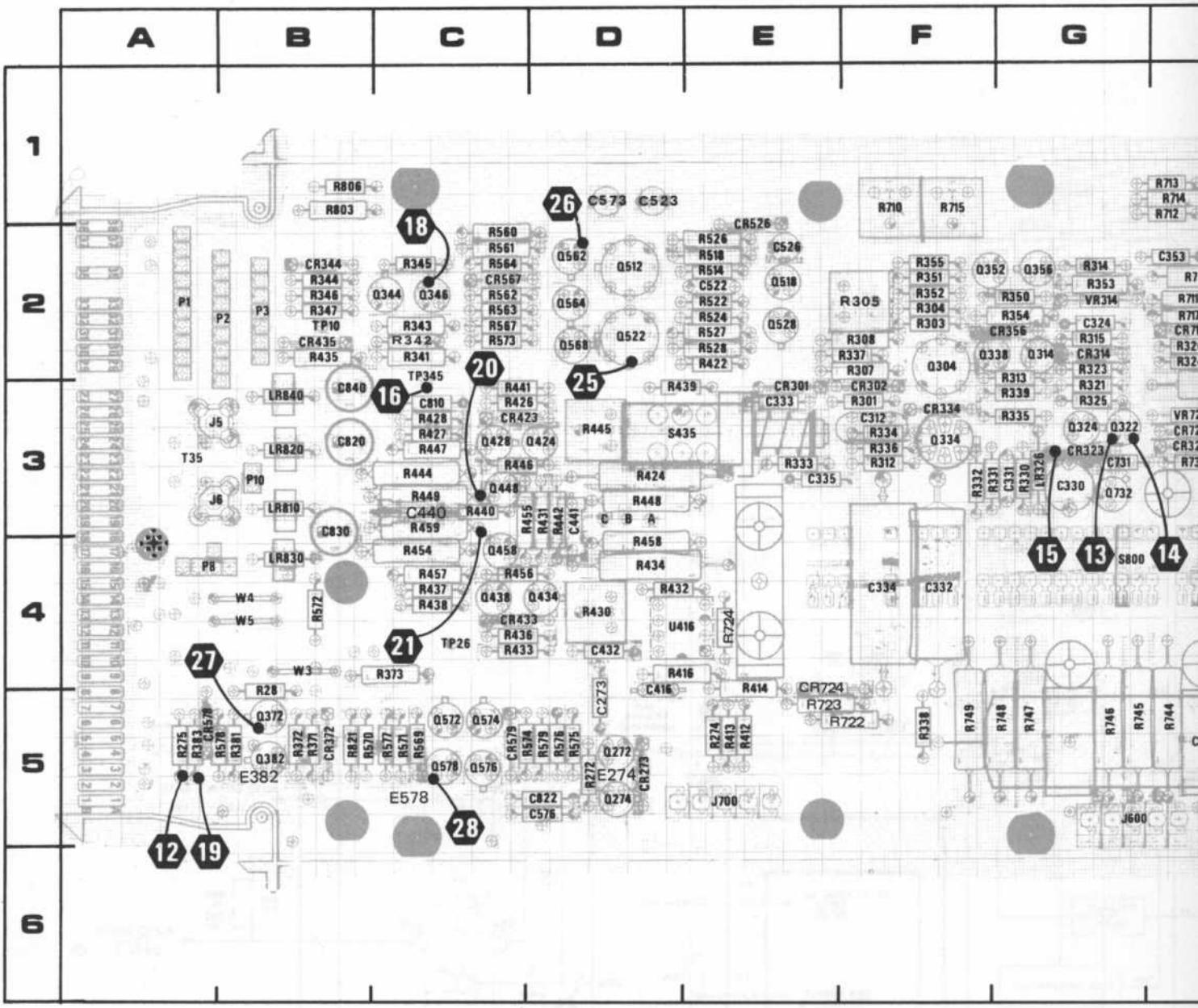
A
B
C
D
E
F
G
1
2
3
4
5
6
12
13
14
15
16
18
19
20
21
25
26
27
28
R806
R803
R345
Q344
Q346
R560
R561
R564
CR567
R562
R563
R567
R573
Q562
Q512
C573
C523
CR526
R526
R518
R514
C522
R522
R524
R527
R528
R422
C526
Q518
Q528
R710
R715
R713
R714
R712
C353
R314
R353
VR314
R350
R354
CR356
C324
R315
CR314
R323
R321
R325
Q352
Q356
R355
R351
R352
R304
R303
R305
R308
R337
R307
CR302
R301
Q304
Q338
Q314
R313
R339
CR334
R335
C312
R334
R336
R312
Q334
CR323
C731
Q732
C330
R332
R331
C331
R330
LR326
Q324
Q322
S800
C334
C332
CR301
C333
R333
C335
R439
R445
S435
R424
R448
R458
R434
R432
R430
U416
R724
C432
R416
C416
R414
CR724
R723
R722
R338
R749
R748
R747
R746
R745
R744
C273
R274
R413
R412
Q272
CR273
R272
Q274
J700
J600
C822
C576
Q572
Q574
CR579
R574
R579
R576
R575
Q578
Q576
E578
E274
R821
R570
R577
R571
R569
R372
R371
CR372
Q372
Q382
E382
R275
R383
CR378
R378
R381
R28
W3
R373
W4
W5
R572
P8
P10
J6
J5
T35
P1
P2
P3
TP10
CR435
R435
R343
R342
R341
TP345
C840
LR840
C810
R428
R427
R447
C820
LR820
R444
R449
C440
R459
LR810
C830
LR830
R454
R457
R437
R438
TP26
R441
R426
CR423
Q428
Q424
R446
Q448
R440
R455
R431
R442
C441
R456
Q458
Q438
Q434
CR433
R436
R433
C458
C456
C438
C434
C448
C446
C444
C428
C424
C422
C420
C418
C416
C414
C412
C410
C408
C406
C404
C402
C400
C398
C396
C394
C392
C390
C388
C386
C384
C382
C380
C378
C376
C374
C372
C370
C368
C366
C364
C362
C360
C358
C356
C354
C352
C350
C348
C346

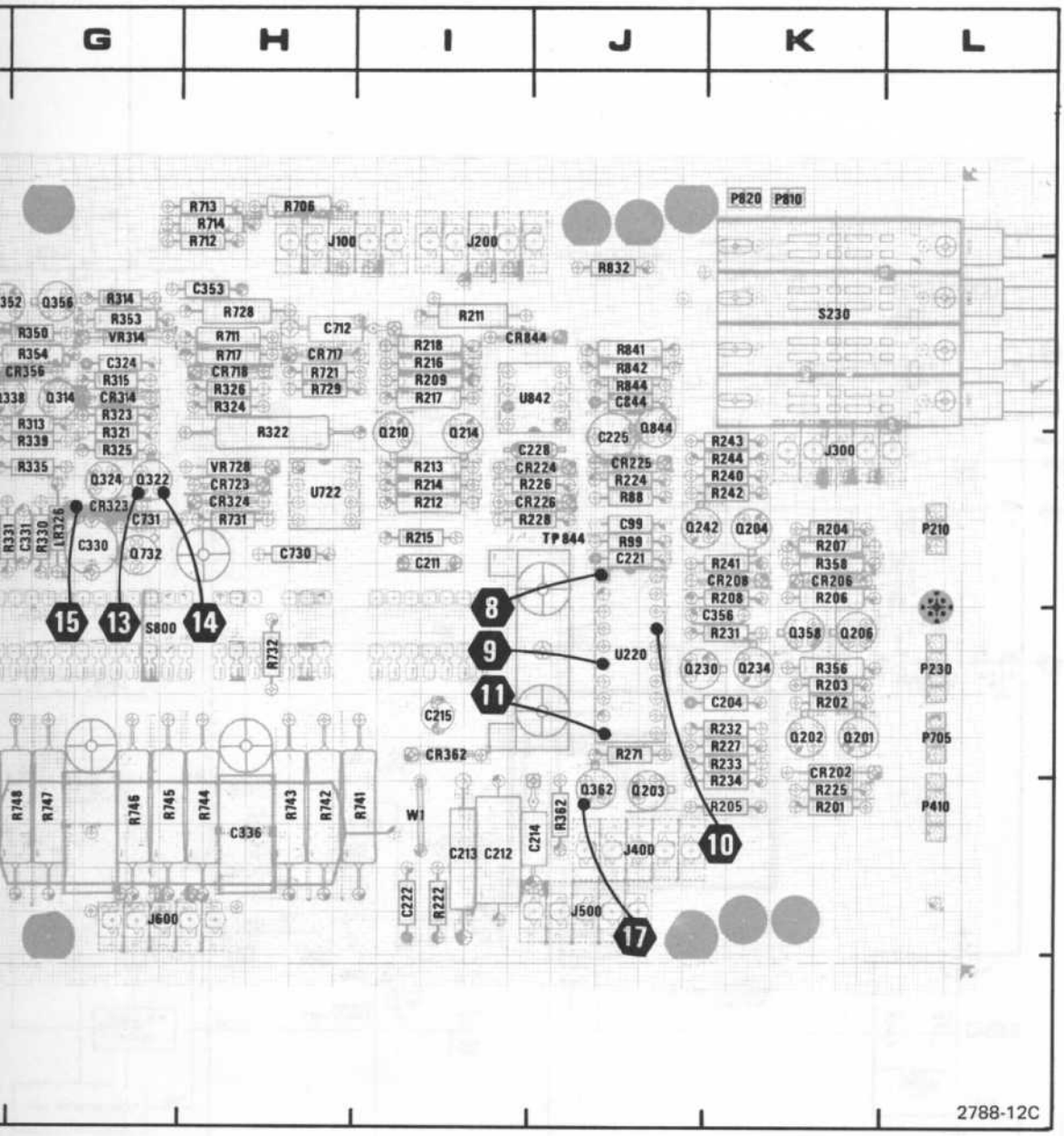

circuit board assembly.

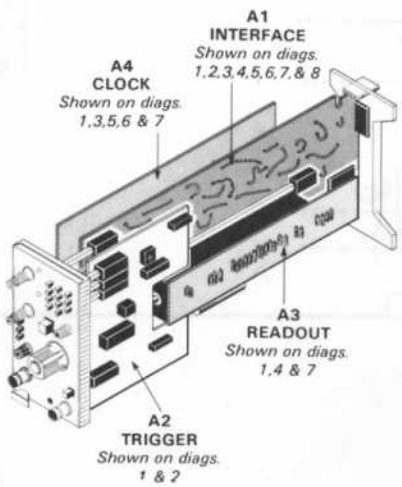

CKT NO	GRID COORD
C99	3J
C204	4K
C211	3I
C212	5I
C213	5I
C214	5J
C215	4I
C221	3J
C222	5I
C225	3J
C228	3J
C273	5D
C312	3F
C324	2G
C330	2G
C331	2G
C332	4F
C333	3E
C334	4F
C335	3E
C336	5H
C353	2H
C356	4K
C416	4D
C432	4D
C440	3C
C441	3D
C522	2E
C523	1D
C526	2E
C573	1D
C576	5D
C712	2H
C730	3H
C731	2G
C810	3C
C820	3B
C822	5D
C830	3B
C840	3B
C844	2J
C4206	3K
C4301	3E
CR202	4K
CR206	3K
CR208	3K
CR224	3J
CR225	3J
CR226	3J
CR273	5D
CR301	3E
CR302	3F
CR314	2G
CR323	2G
CR324	3H
CR334	3F
CR344	2B
CR356	2G
CR362	4I
CR372	5B
CR423	3C
CR433	4C
CR435	2B
CR526	2E
CR567	2C
CR578	5A
CR579	5C
CR717	2H
CR718	2H
CR723	3H
CR724	4E
CR844	2J
E274	
E278	
E382	
J5	
J6	
J100	
J200	
J300	
J400	
J500	
J600	
J700	
LR326	
LR810	
LR820	
LR830	
LR840	
P1	
P2	
P3	
P8	
P10	
P210	
P230	
P410	
P705	
P810	
P820	
Q201	
Q202	
Q203	
Q204	
Q206	
Q210	
Q214	
Q230	
Q234	
Q242	
Q272	
Q274	
Q304	
Q314	
Q322	
Q324	
Q334	
Q338	
Q344	
Q346	
Q352	
Q356	
Q358	
Q362	
Q372	
Q382	
Q424	
Q428	
Q434	
Q438	
Q448	
Q458	
Q512	
Q518	
Q522	
Q528	
Q562	
Q564	

CKT NO	GRID COORD
C99	3J
C204	4K
C211	3I
C212	5I
C213	5I
C214	5J
C215	4I
C221	3J
C222	5I
C225	3J
C228	3J
C273	5D
C312	3F
C324	2G
C330	2G
C331	2G
C332	4F
C333	3E
C334	4F
C335	3E
C336	5H
C353	2H
C356	4K
C416	4D
C432	4D
C440	3C
C441	3D
C522	2E
C523	1D
C526	2E
C573	1D
C576	5D
C712	2H
C730	3H
C731	2G
C810	3C
C820	3B
C822	5D
C830	3B
C840	3B
C844	2J
C4206	3K
C4301	3E
CR202	4K
CR206	3K
CR208	3K
CR224	3J
CR225	3J
CR226	3J
CR273	5D
CR301	3E
CR302	3F
CR314	2G
CR323	2G
CR324	3H
CR334	3F
CR344	2B
CR356	2G
CR362	4I
CR372	5B
CR423	3C
CR433	4C
CR435	2B
CR526	2E
CR567	2C
CR578	5A
CR579	5C
CR717	2H
CR718	2H
CR723	3H
CR724	4E
CR844	2I
E274	5D
E278	5C
E382	5B
J5	3A
J6	3A
J100	1H
J200	1I
J300	3K
J400	5J
J500	5J
J600	5G
J700	5E
LR326	2G
LR810	3B
LR820	3B
LR830	4B
LR840	3B
P1	2A
P2	2B
P3	2B
P8	4A
P10	3B
P210	3L
P230	4L
P410	5L
P705	4L
P810	1K
P820	1K
Q201	4K
Q202	4K
Q203	5J
Q204	3K
Q206	4K
Q210	2I
Q214	2I
Q230	4J
Q234	4K
Q242	3J
Q272	5D
Q274	5D
Q304	2F
Q314	2G
Q322	2G
Q324	2G
Q334	3F
Q338	2F
Q344	2C
Q346	2C
Q352	2F
Q356	2G
Q358	4K
Q362	5J
Q372	5B
Q382	5B
Q424	3D
Q428	3C
Q434	4D
Q438	4C
Q448	3C
Q458	4C
Q512	2D
Q518	2E
Q522	2D
Q528	2E
Q562	2D
Q564	2D
Q568	2D
Q572	5C
Q574	5C
Q576	5C
Q578	5C
Q732	2G
Q844	2J
R28	4B
R88	3J
R99	3J
R201	5K
R202	4K
R203	4K
R204	3K
R205	5K
R206	3K
R207	3K
R208	3K
R209	2I
R211	2I
R212	3I
R213	3I
R214	3I
R215	3I
R216	2I
R217	2I
R218	2I
R222	5I
R224	3J
R225	5K
R226	3J
R227	4K
R228	3J
R231	4K
R232	4K
R233	4K
R234	5K
R240	3K
R241	3K
R242	3K
R243	3K
R244	3K
R255	5K
R271	4J
R272	5D
R274	5E
R275	5A
R301	3F
R303	2F
R304	2F
R305	2F
R307	2F
R308	2F
R312	3F
R313	2G
R314	2G
R315	2G
R321	2G
R322	2H
R323	2G
R324	2H
R325	2G
R326	2H
R330	2G
R331	3F
R332	3F
R333	3E
R334	3F
R335	2G
R336	3F
R337	2F
R338	5F
R339	2G
R341	2C
R342	2C
R343	2C
R344	2B
R345	2C
R346	2B
R347	2B
R350	2G
R351	2F
R352	2F
R353	2G
R354	2G
R355	2F
R356	4K
R358	3K
R362	5J
R371	5B
R372	5B
R373	4C
R381	5B
R383	5A
R412	5E
R413	5E
R414	4E
R416	4D
R422	2E
R424	3D
R426	3C
R427	3C
R428	3C
R430	4D
R431	3D
R432	4D
R433	4C
R434	4D
R435	2B
R436	4C
R437	4C
R438	4C
R439	3D
R440	3C
R441	3C
R442	3D
R444	3C
R445	3D
R446	3C
R447	3C
R448	3D
R449	3C
R454	4C
R455	3C
R456	4C
R457	4C
R458	4D
R459	3C
R514	2E
R518	2E
R522	2E
R524	2E
R526	2E
R527	2E
R528	2E
R560	2C
R561	2C
R562	2C
R563	2C
R564	2C
R567	2C
R569	5C
R570	5B
R571	5C
R572	4B
R573	2C
R574	5C
R575	5D
R576	5D
R577	5C
R578	5B
R579	5D
R706	1H
R710	1F
R711	2H
R712	1H
R713	1H
R714	1H
R715	1F
R717	2H
R721	2H
R722	5E
R723	5E
R724	4E
R728	2H
R729	5F
R731	3H
R732	4H
R741	5I
R742	5H
R743	5H
R744	5H
R745	5G
R746	5G
R747	5G
R748	5G
R749	5F
R803	1B
R806	1B
R821	5B
R832	2J
R841	2J
R842	2J
R844	2J
S230	2K
S435	3D
S800	4G
T35	3A
TP10	2B
TP26	4C
TP345	2C
TP844	3J
U220	4J
U416	4D
U722	3H
U842	2I
VR314	2G
VR728	3H
W1	5I
W3	4B
W4	4B
W5	4B

VOLTAGE AND WAVEFORM CONDITIONS

The voltages and waveforms shown were obtained with the 7B87 installed in the B HORIZ compartment and controls set as follows:

TIME/DIV, 1 ms; VARIABLE (CAL IN), knob in; MAG, X1 (button in); HOLD OFF, fully counterclockwise; SWP CAL, midranged; POSITION, midranged; TRIGGERING: LEVEL, midranged; MODE, P-P AUTO; COUPLING, AC; SOURCE, LINE; SLOPE, +; ACQUIRE-STOP DELAY, counterclockwise.

Voltage Conditions. The voltages shown on the diagram were obtained using a digital multimeter with a 10 MΩ input impedance (Tektronix DM 501 Digital Multimeter or Tektronix 7D13 Digital Multimeter used with readout equipped, 7000-series oscilloscope).

Waveform Conditions. The waveforms shown below were obtained using a test oscilloscope system with 10 MΩ input impedance and at least 60 MHz bandwidth (Tektronix 7603 Oscilloscope, 7B53A Time Base, and 7A13 Differential Comparator equipped with 10X probe).

NOTE

Some voltages and waveforms were measured with the Clock board removed.

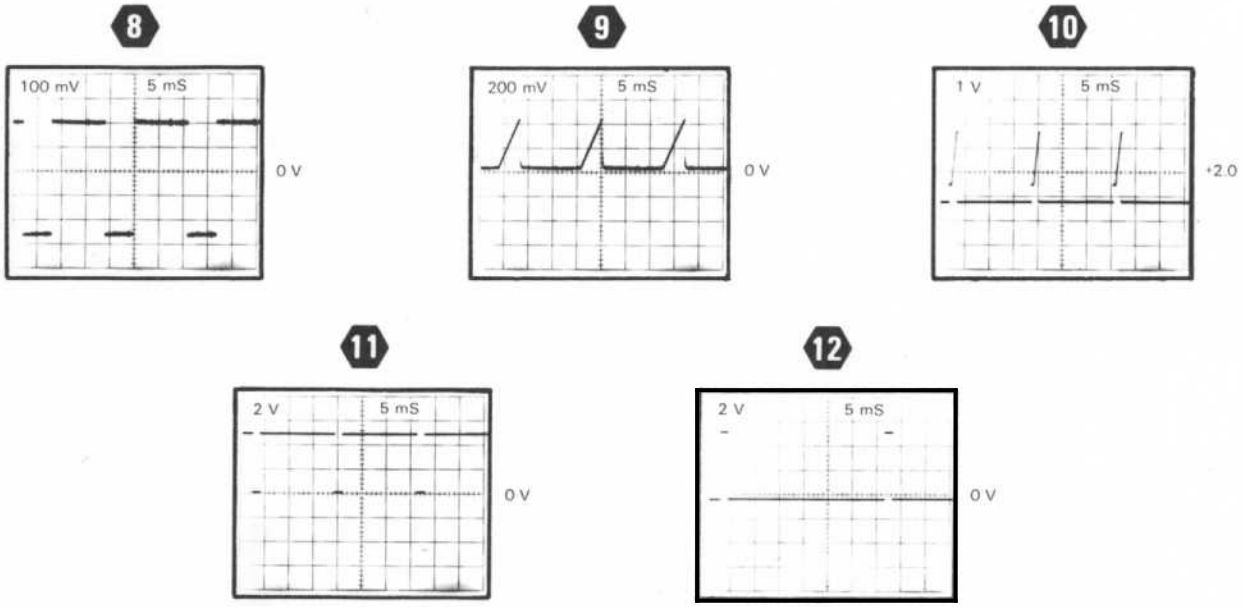

2788-13

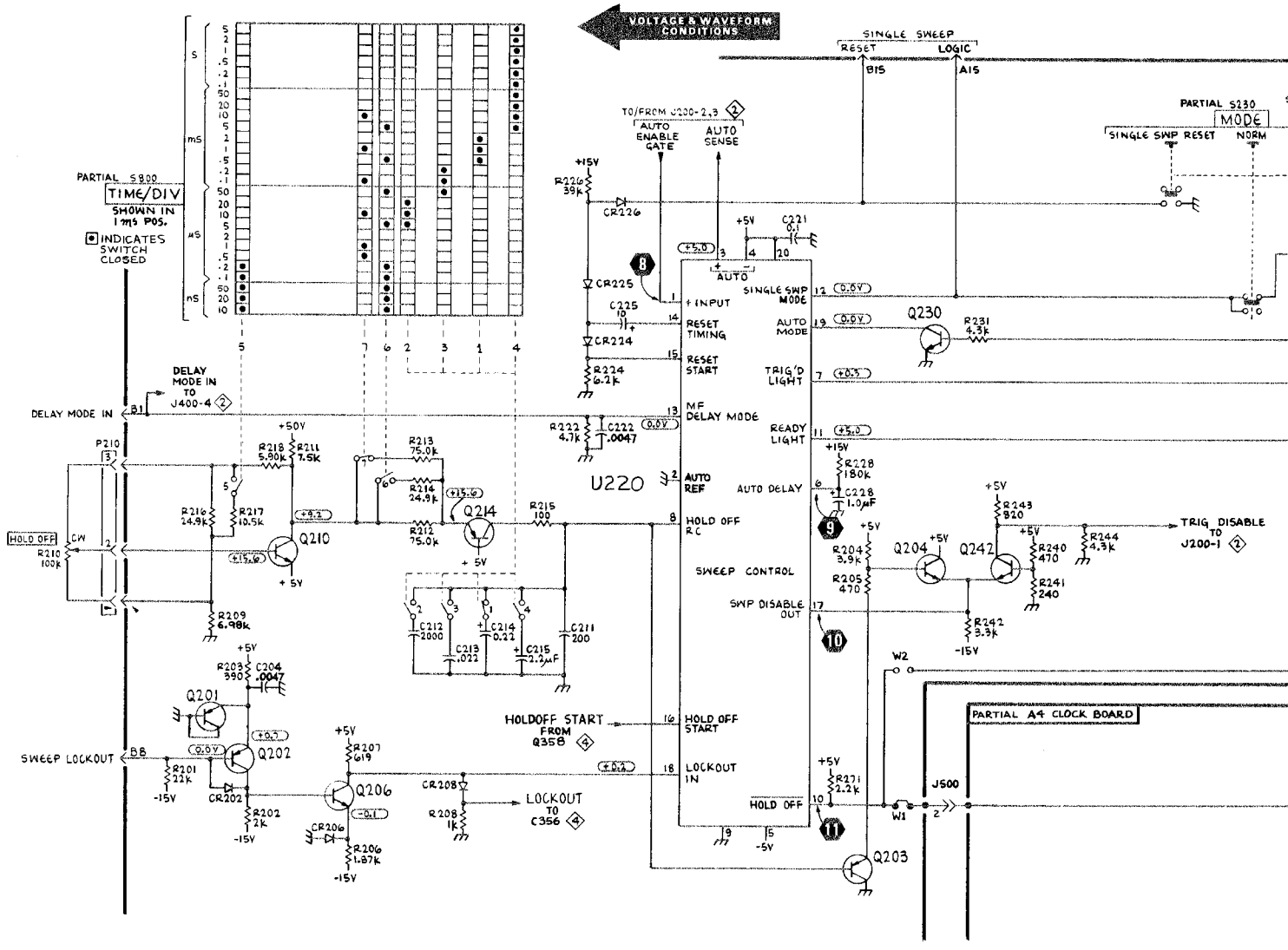

7B87

2788-202
REV OCT19

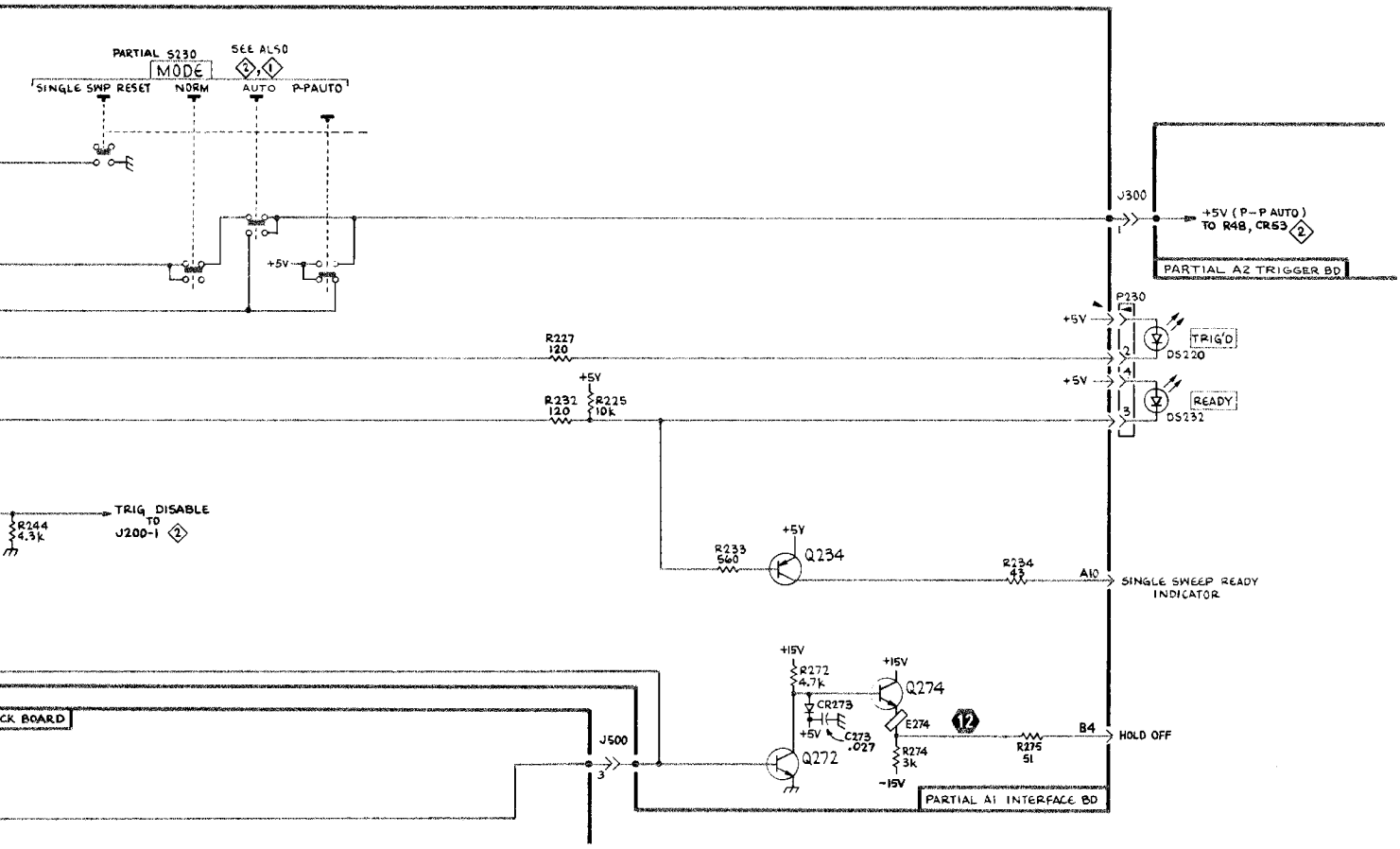
PARTIAL S230
MODE
SEE ALSO 2, 1
SINGLE SWP RESET
NORM
AUTO
P-PAUTO
+5V
J300
+5V (P-P AUTO) TO R48, CR53 2
PARTIAL A2 TRIGGER BD
P230
+5V
TRIG'D
DS220
+5V
READY
DS232
R227 120
+5V
R232 120
R225 10k
R244 4.3k
TRIG DISABLE TO J200-1 2
+5V
R233 560
Q234
R234 43
A10
SINGLE SWEEP READY INDICATOR
+15V
R272 4.7k
+15V
Q274
CR273
+5V
C273 .027
E274
12
B4
HOLD OFF
J500
3
Q272
R274 3k
R275 51
-15V
PARTIAL A1 INTERFACE BD

VOLTAGE AND WAVEFORM CONDITIONS

The voltages and waveforms shown were obtained with the 7B87 installed in the B HORIZ compartment and controls set as follows.

TIME/DIV, 1 ms, VARIABLE (CAL IN), knob in; MAG, X1 (button in); HOLD OFF, fully counterclockwise; SWP CAL, midranged; POSITION, midranged; TRIGGERING LEVEL, midranged; MODE, P-P AUTO; COUPLING, AC; SOURCE, LINE; SLOPE, +; ACQUIRE—STOP DELAY, counterclockwise.

Voltage Conditions. The voltages shown on the diagram were obtained using a digital multimeter with a 10 MΩ input impedance (Tektronix DM 501 Digital Multimeter or Tektronix 7D13 Digital Multimeter used with readout equipped, 7000-series oscilloscope).

Waveform Conditions. The waveforms shown below were obtained using a test oscilloscope system with 10 MΩ input impedance and at least 60 MHz bandwidth (Tektronix 7603 Oscilloscope, 7B53A Time Base, and 7A13 Differential Comparator equipped with 10X probe).

NOTE

Some voltages and waveforms were measured with the Clock board removed.

13

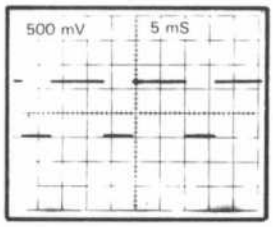

14

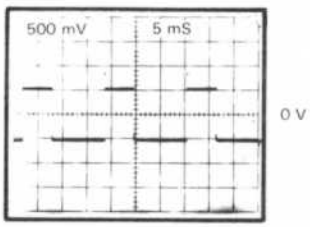

15

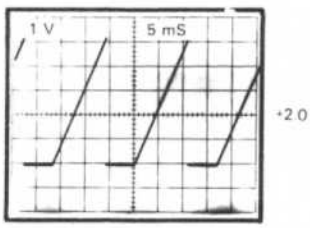

16

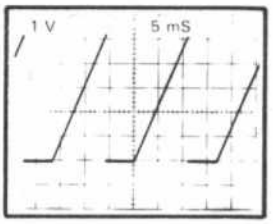

17

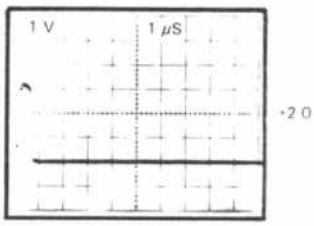

18

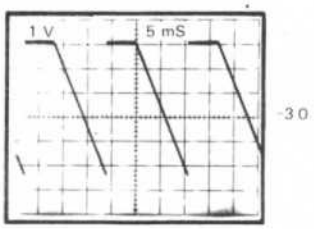

19

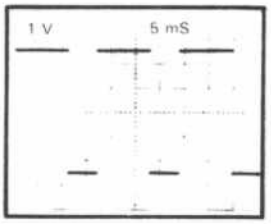

20

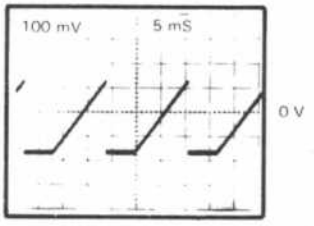

21

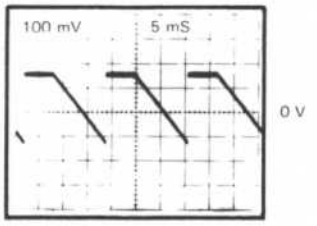

2788 15

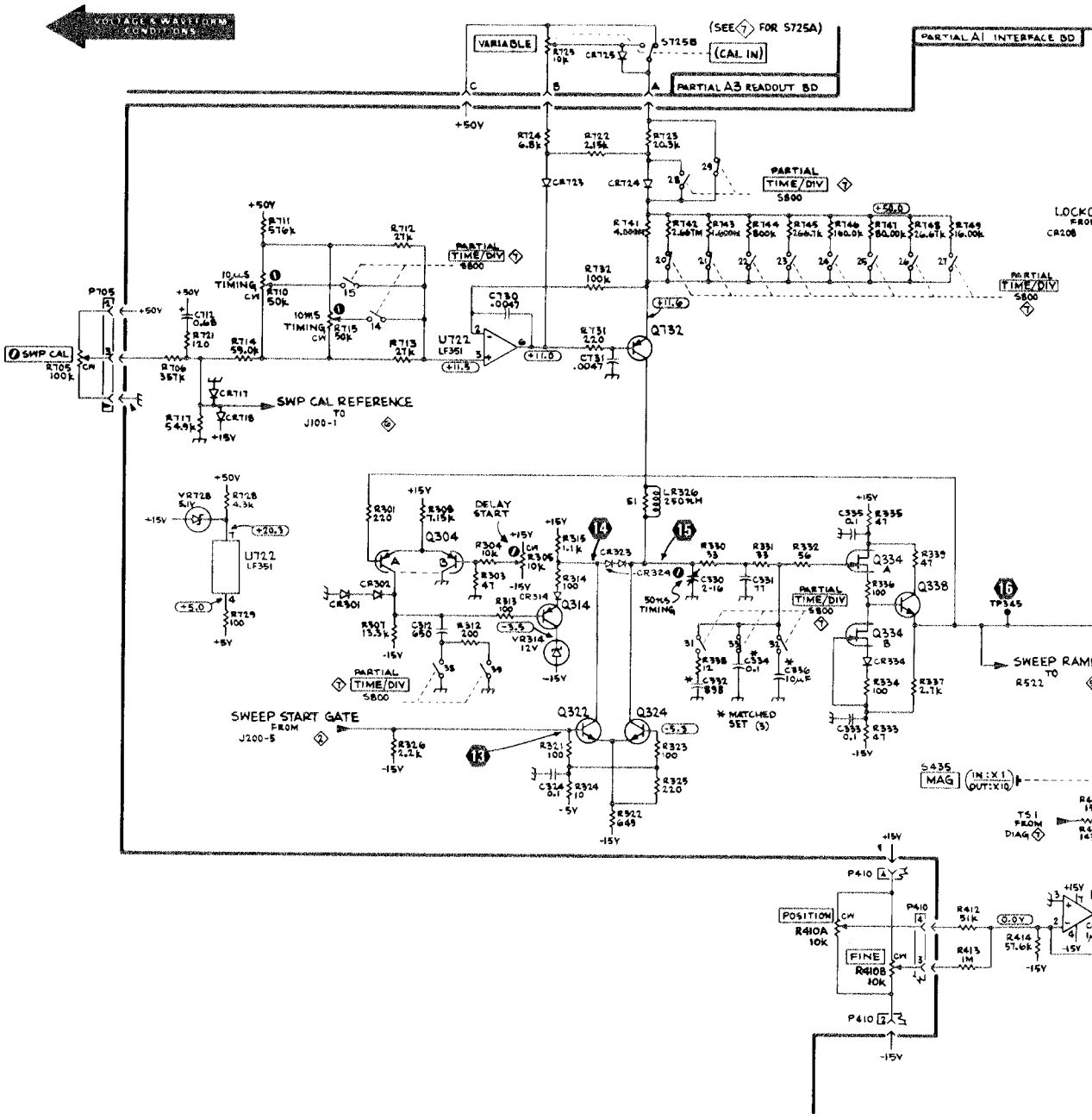
VOLTAGE & WAVEFORM CONDITIONS
VARIABLE
S725B
(CAL IN)
(SEE 7 FOR S725A)
PARTIAL A1 INTERFACE BD
PARTIAL A3 READOUT BD
+50V
PARTIAL TIME/DIV S800
SWP CAL
SWP CAL REFERENCE TO J100-1
U722 LF351
Q732
DELAY START
Q304
Q314
Q322
Q324
Q334
Q338
SWEEP START GATE FROM J200-5
SWEEP RAMP TO R522
50nS TIMING
* MATCHED SET (3)
S435 MAG
POSITION R410A 10K
FINE R410B 10K
TS1 FROM DIAG

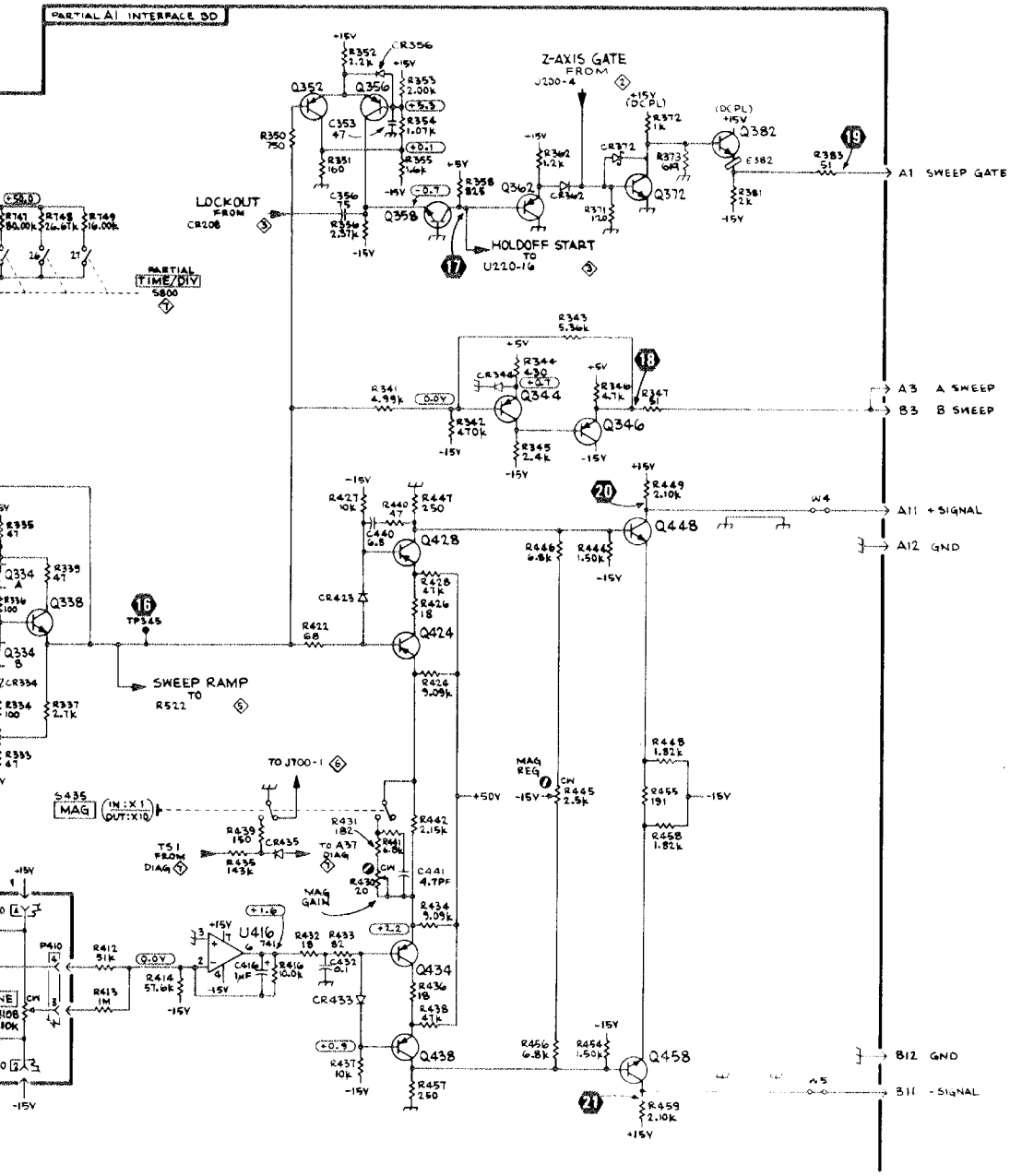

2788-203
REV SEP 1981

SWEEP GENERATOR 4

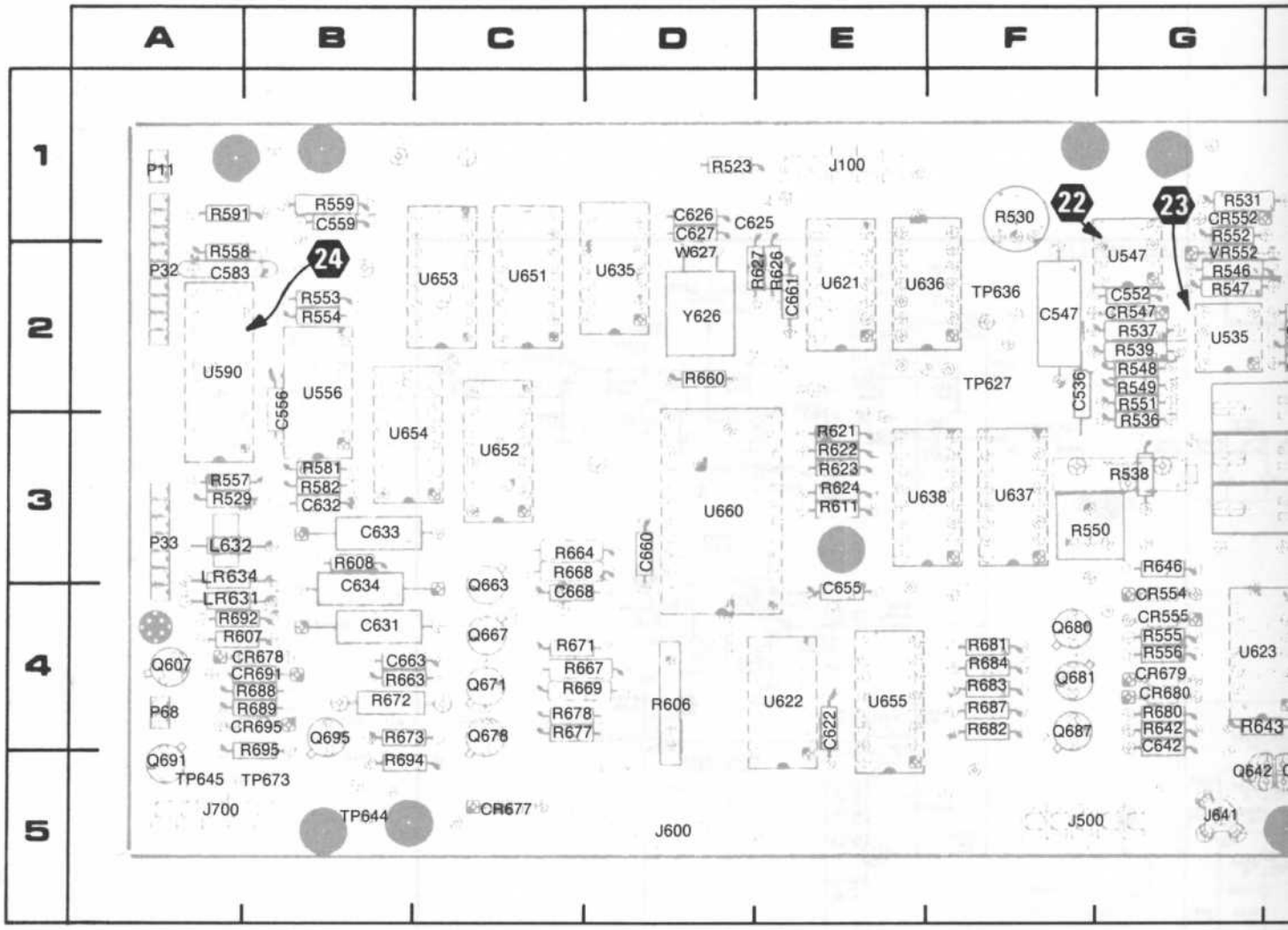

Figure 8-5. A4—Clock circuit board assembly.

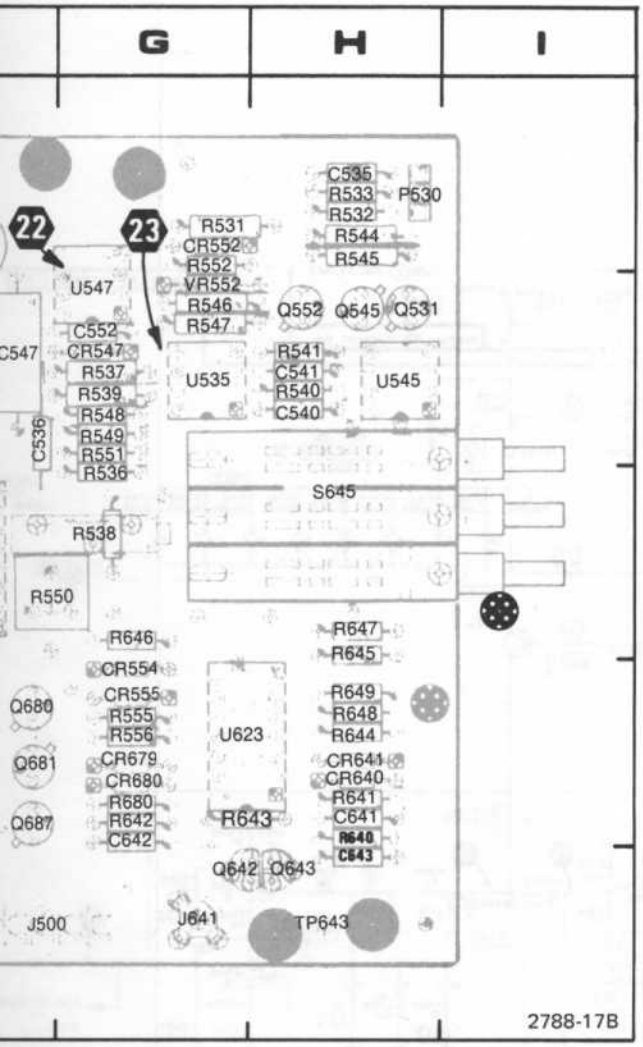

CKT NO	GRID COORD
C535	1H
C536*	2F
C540	2H
C541	2H
C547	2F
C552*	2G
C556	2B
C559	1B
C583	2A
C622	4E
C625*	1E
C626	1D
C627*	1D
C631	4B
C632	3B
C633	3B
C634	4B
C641	4H
C642	4G
C643	5H
C655	4E
C660	3D
C661	2E
C663	4B
C668	4C
CR547	2G
CR552	1G
CR554	4G
CR555	4G
CR640	4H
CR641	4H
CR647	2G
CR677	5C
CR678	4B
CR679	4G
CR680	4G
CR691	4B
CR695	4B
J100	1E
J500	5F
J600	5D
J641	5G
J700	5A
L632	3A
LR626**	
LR631	4A
LR634	4A

CKT NO	GRID COORD
P11	1A
P32	2A
P33	3A
P68	4A
P530	1H
Q522	2H
Q531	2H
Q545	2H
Q607	4A
Q642	5G
Q643	5H
Q663	3C
Q667	4C
Q671	4C
Q678	4C
Q680	4F
Q681	4F
Q687	4F
Q691	5A
Q695	4B
R523	1D
R529	3A
R530	1F
R531	1G
R532	1H
R533	1H
R536	3G
R537	2G
R538	3G
R539	2G
R540	2H
R541	2H
R544	1H
R545	1H
R546	2G
R547	2G
R548	2G
R549	2G
R550	3F
R551	2G
R552	1G
R553	2B
R554	2B
R555	4G
R556	4G
R557	3A
R558	2A
R559	1B
R581	3B
R582	3B

CKT NO	GRID COORD
R591	1A
R606	4D
R607	4B
R608	3B
R611	3E
R621	3E
R622	3E
R623	3E
R624	3E
R626	2E
R627	2E
R630	1F
R640	4H
R641	4H
R642	4G
R643	4H
R644	4H
R645	3H
R646	3G
R647	3H
R648	4H
R649	4H
R660	2D
R663	4B
R664	3C
R667	4C
R668	3C
R669	4C
R671	4C
R672	4B
R673	4B
R677	4C
R678	4C
R680	4G
R681	4F
R682	4F
R683	4F
R684	4F
R687	4F
R688	4B
R689	4B
R692	4A
R694	5B
R695	4B
S645	3H
TP627	2F
TP636	2F
TP643	5H
TP644	5B
TP645	5A
TP673	5B

CKT NO	GRID COORD
U535	2G
U545	2H
U547	2G
U556	2B
U590	2A
U621	2E
U622	4E
U623	4G
U635	2D
U636	2E
U637	3F
U638	3F
U651	2C
U652	3C
U653	2C
U654	3B
U655	4E
U660	3D
VR552	2G
Y626	2D
W627*	1D

*See Parts List for serial number ranges.

**Located on back of board.

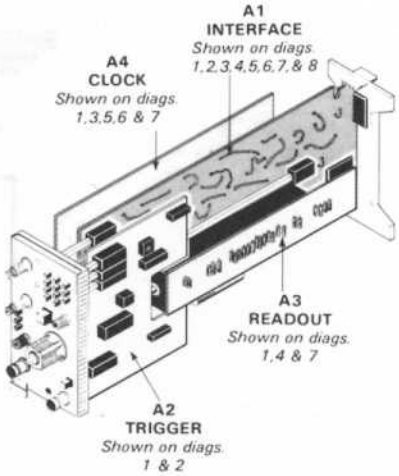

VOLTAGE AND WAVEFORM CONDITIONS

The voltages and waveforms shown were obtained with the 7B87 installed in the B HORIZ compartment and controls set as follows:

TIME/DIV, 1 ms; VARIABLE (CAL IN), knob in; MAG X1 (button in); HOLD OFF, fully counterclockwise; SWP CAL, midranged, POSITION, midranged; TRIGGERING LEVEL, midranged; MODE, AUTO; COUPLING, AC; SOURCE, EXT; SLOPE, +; EXT TRIG IN, IN (1 MΩ); ACQUIRE-STOP DELAY, counterclockwise.

Voltage Conditions. The voltages shown on the diagram were obtained using a digital multimeter with a 1 MΩ input impedance (Tektronix DM 501 Digital Multimeter or Tektronix 7D13 Digital Multimeter used with readout equpped, 7000-series oscilloscope).

Waveform Conditions. The waveforms shown below were obtained using a test oscilloscope system with 10 MΩ input impedance and at least 60 MHz bandwidth (Tektronix 7603 Oscilloscope, 7B53A Time Base, and 7A13 Differential Comparator equipped with 10X probe). A 4 volt, 1 kHz square wave signal was fed to the EXT TRIG IN connector.

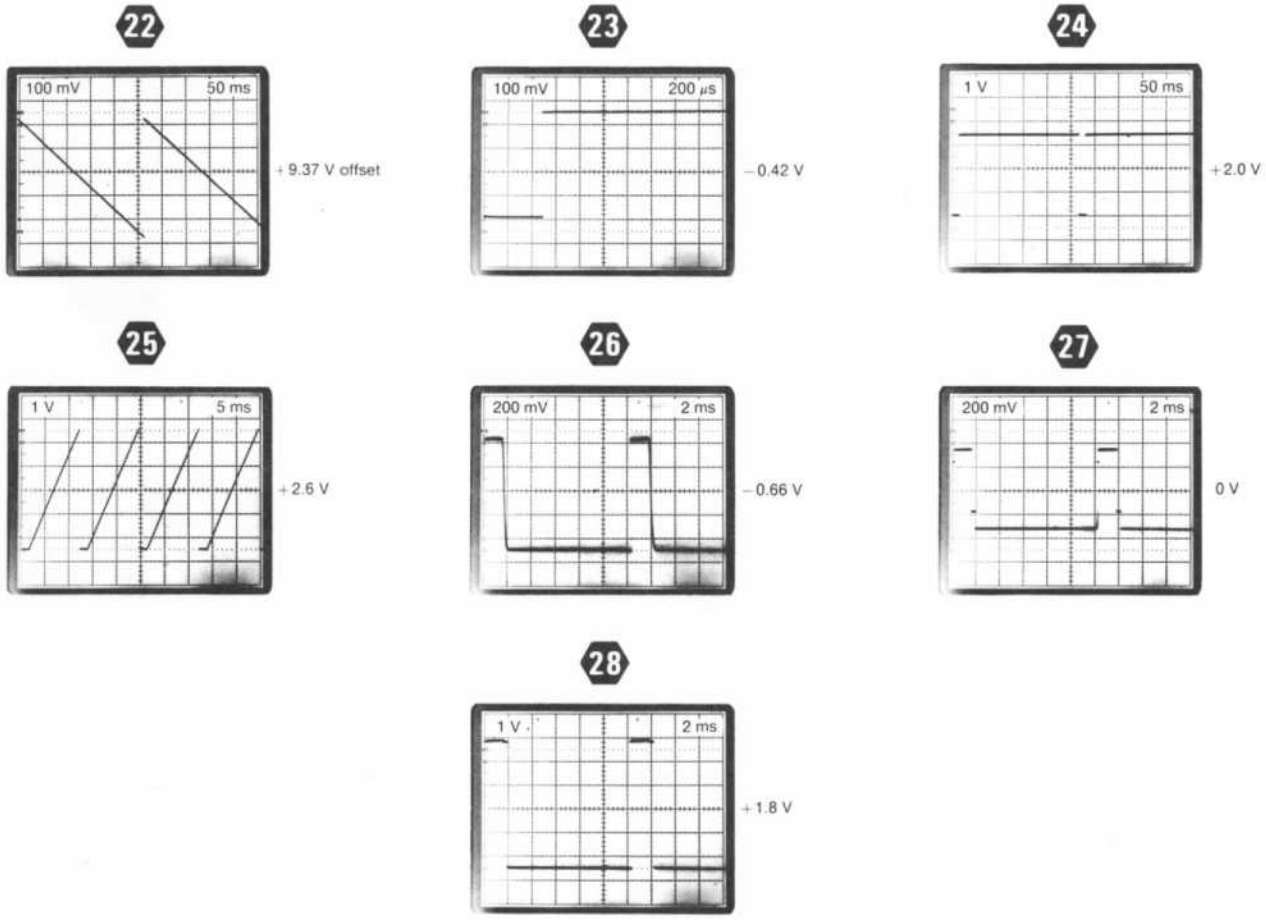

2788-18

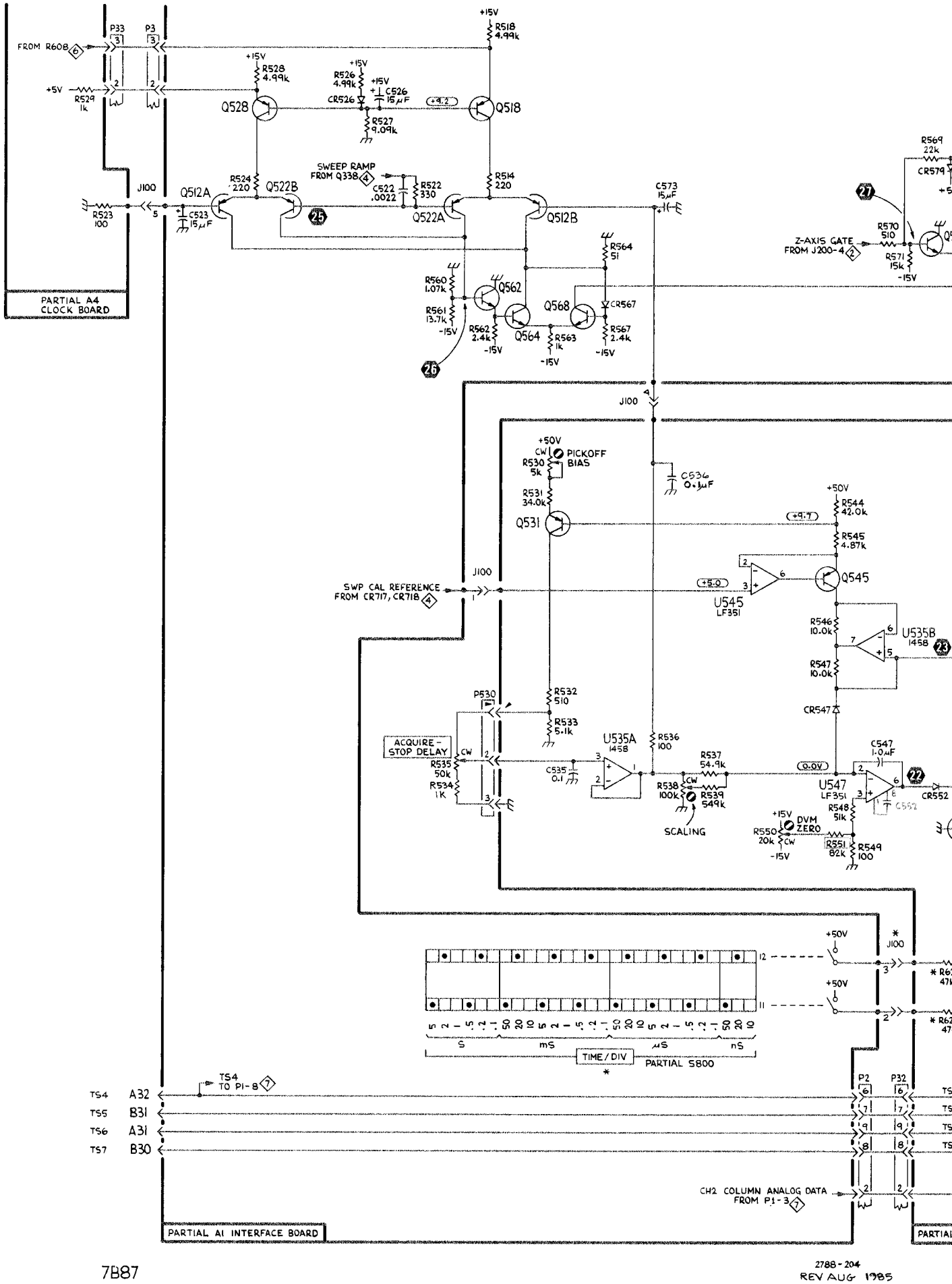
FROM R608
P33
P3
+5V
R529 1k
+15V
R528 4.99k
Q528
R526 4.99k
CR526
C526 15µF
R527 9.09k
R518 4.99k
Q518
+9.2
J100
R523 100
C523 15µF
Q512A
R524 220
Q522B
SWEEP RAMP FROM Q338
C522 .0022
R522 330
Q522A
R514 220
Q512B
C573 15µF
PARTIAL A4 CLOCK BOARD
R560 1.07k
R561 13.7k
-15V
Q562
Q564
R562 2.4k
R563 1k
Q568
CR567
R564 51
R567 2.4k
R569 22k
CR579
Z-AXIS GATE FROM J200-4
R570 510
R571 15k
+50V
CW
PICKOFF BIAS
R530 5k
R531 34.0k
Q531
C536 0.1µF
R544 42.0k
R545 4.87k
Q545
U545 LF351
SWP CAL REFERENCE FROM CR717, CR718
R546 10.0k
U535B 1458
R547 10.0k
CR547
P530
R532 510
R533 5.1k
ACQUIRE - STOP DELAY
R535 50k
R534 1K
U535A 1458
C535 0.1
R536 100
R537 54.9k
R538 100k
R539 549k
SCALING
0.0V
C547 1.0µF
U547 LF351
CR552
R548 51k
DVM ZERO
R550 20k
R551 82k
R549 100
TIME/DIV
PARTIAL S800
TS4 A32
TS5 B31
TS6 A31
TS7 B30
TS4 TO PI-8
P2
P32
CH2 COLUMN ANALOG DATA FROM P1-3
PARTIAL A1 INTERFACE BOARD

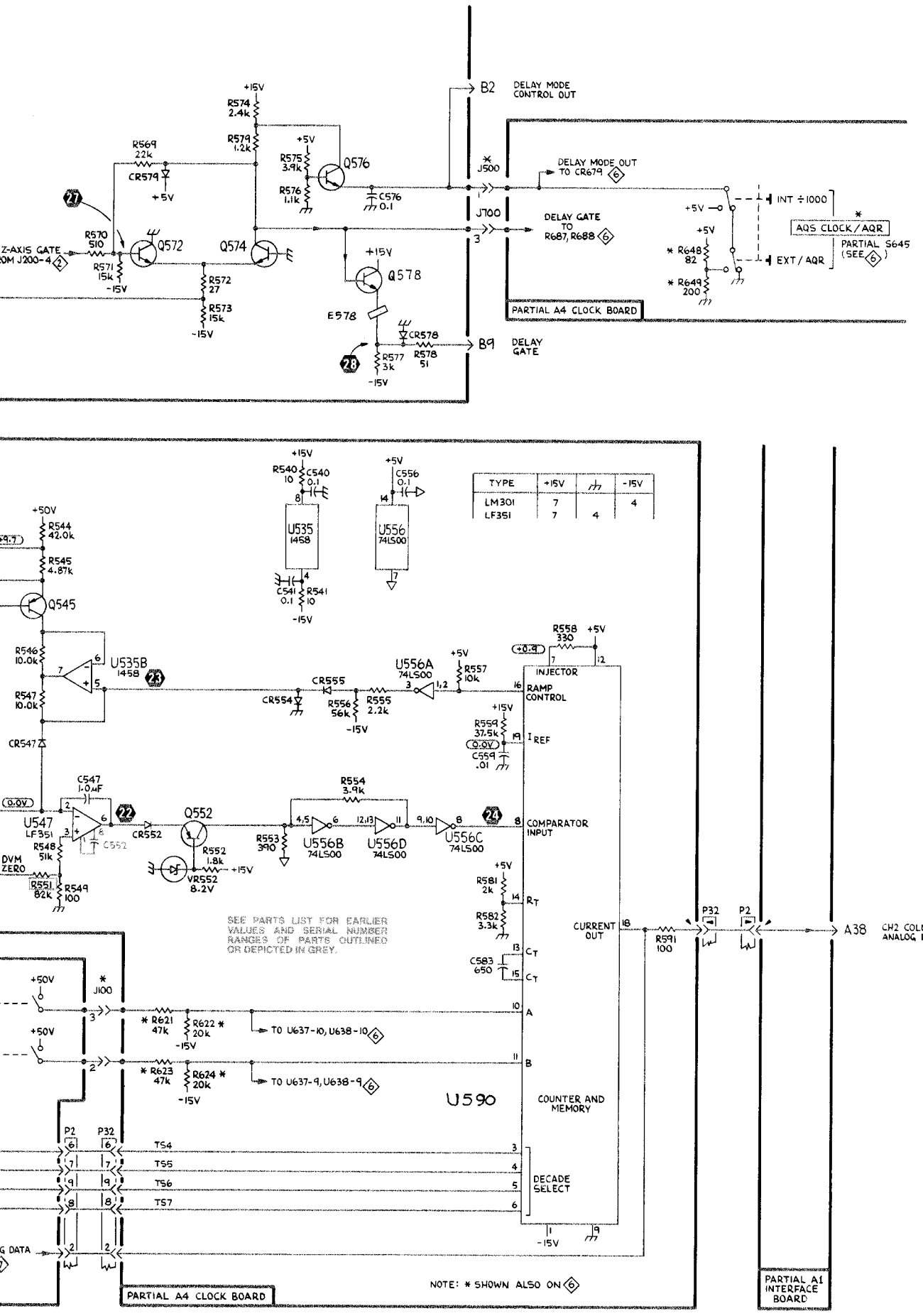
B2
DELAY MODE CONTROL OUT
+15V
R574 2.4k
R579 1.2k
R569 22k
CR579
+5V
R575 3.9k
Q576
R576 1.1k
C576 0.1
J500
DELAY MODE OUT TO CR679 6
J100
DELAY GATE TO R687, R688 6
+5V
INT ÷1000
AQS CLOCK/AQR
PARTIAL S645 (SEE 6)
EXT/AQR
* R648 82
* R649 200
Z-AXIS GATE
R570 510
R571 15k
-15V
Q572
Q574
R572 27
R573 15k
Q578
E578
CR578
R577 3k
R578 51
B9
DELAY GATE
PARTIAL A4 CLOCK BOARD
TYPE | +15V | -15V
LM301 | 7 | 4
LF351 | 7 | 4
R540 10
C540 0.1
U535 1458
C541 0.1
R541 10
C556 0.1
U556 74LS00
+50V
R544 42.0k
R545 4.87k
Q545
R546 10.0k
R547 10.0k
U535B 1458
CR547
CR555
CR554
R556 56k
R555 2.2k
U556A 74LS00
R557 10k
R558 330
INJECTOR
RAMP CONTROL
R559 37.5k
I REF
C559 .01
C547 1.0μF
U547 LF351
C552
R548 51k
DVM ZERO
R551 82k
R549 100
CR552
Q552
R552 1.8k
VR552 8.2V
R554 3.9k
R553 390
U556B 74LS00
U556D 74LS00
U556C 74LS00
COMPARATOR INPUT
R581 2k
R582 3.3k
C583 650
CURRENT OUT
R591 100
P32
P2
A38
CH2 COLUMN ANALOG DATA
SEE PARTS LIST FOR EARLIER VALUES AND SERIAL NUMBER RANGES OF PARTS OUTLINED OR DEPICTED IN GREY.
* R621 47k
R622 * 20k
TO U637-10, U638-10 6
* R623 47k
R624 * 20k
TO U637-9, U638-9 6
U590
COUNTER AND MEMORY
TS4
TS5
TS6
TS7
DECADE SELECT
NOTE: * SHOWN ALSO ON 6
PARTIAL A4 CLOCK BOARD
PARTIAL A1 INTERFACE BOARD

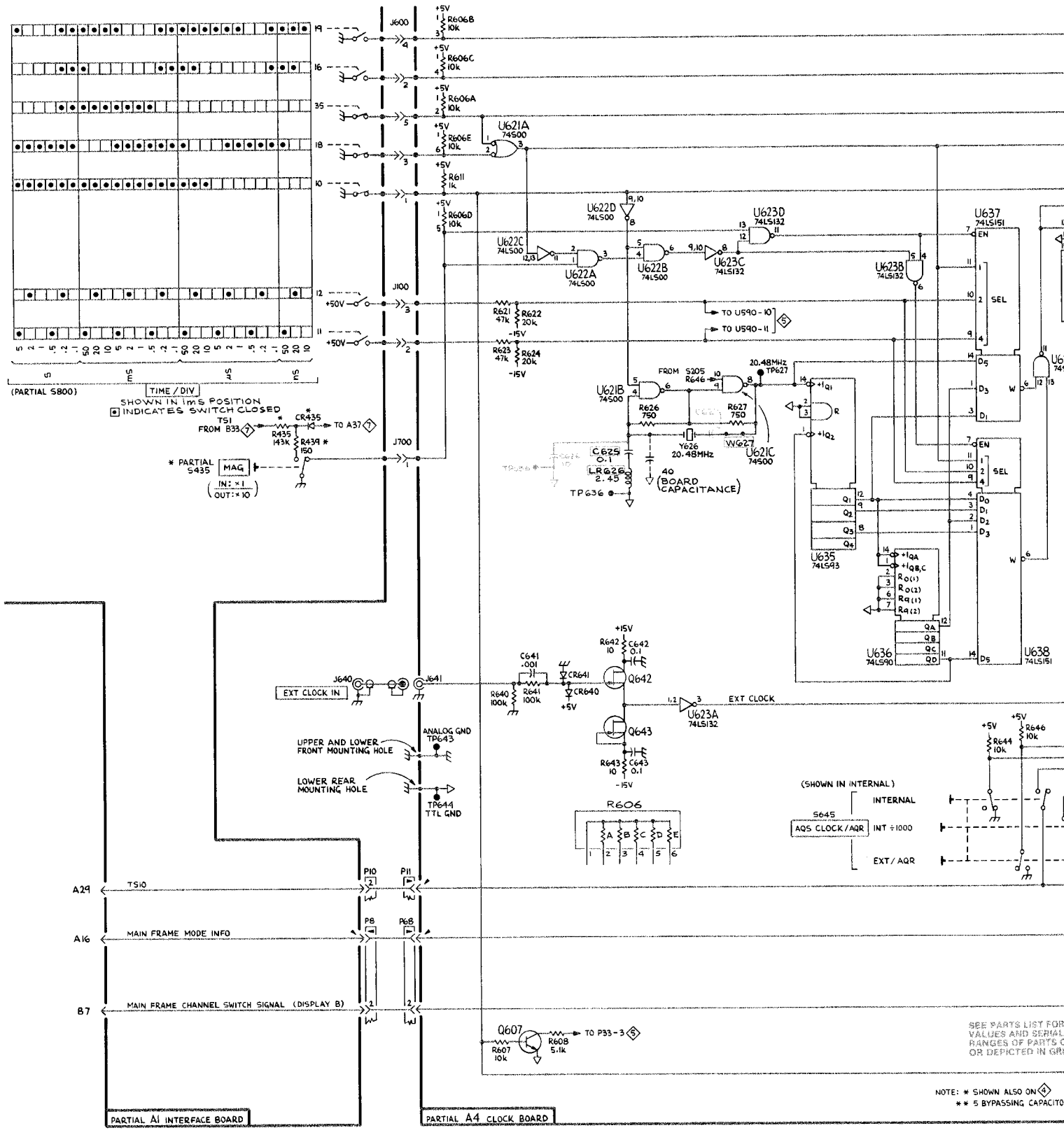
J600
R606B 10k
R606C 10k
R606A 10k
R606E 10k
R611 1k
R606D 10k
U621A 74S00
U622D 74LS00
U623D 74LS132
U622C 74LS00
U622A 74LS00
U622B 74LS00
U623C 74LS132
U623B 74LS132
U637 74LS151
J100
+50V
-15V
R621 47k
R622 20k
R623 47k
R624 20k
TO U590-10
TO U590-11
(PARTIAL S800)
TIME/DIV
SHOWN IN 1mS POSITION
INDICATES SWITCH CLOSED
TS1
FROM B33
CR435
TO A37
R435 143k
R439 150
J700
* PARTIAL S435
MAG
IN: ×1
OUT: ×10
FROM S205
R646
20.48MHz TP627
U621B 74S00
R626 750
R627 750
Y626 20.48MHz
WQ27
U621C 74S00
C625 0.1
LRQ26 2.45
40 (BOARD CAPACITANCE)
TP636
U635 74LS93
U636 74LS90
U638 74LS151
J640
EXT CLOCK IN
J641
C641 .001
CR641
CR640
R640 100k
R641 100k
+15V
R642 10
C642 0.1
Q642
Q643
R643 10
C643 0.1
-15V
+5V
U623A 74LS132
EXT CLOCK
UPPER AND LOWER FRONT MOUNTING HOLE
ANALOG GND TP643
LOWER REAR MOUNTING HOLE
TP644 TTL GND
R606
(SHOWN IN INTERNAL)
S645
AQS CLOCK/AQR
INTERNAL
INT ÷1000
EXT/AQR
R644 10k
R646 10k
A29
TS10
P10
P11
A16
MAIN FRAME MODE INFO
P8
P68
B7
MAIN FRAME CHANNEL SWITCH SIGNAL (DISPLAY B)
Q607
R607 10k
R608 5.1k
TO P33-3
PARTIAL A1 INTERFACE BOARD
PARTIAL A4 CLOCK BOARD
SEE PARTS LIST FOR VALUES AND SERIAL RANGES OF PARTS OR DEPICTED IN GR
NOTE: * SHOWN ALSO ON
** 5 BYPASSING CAPACITO

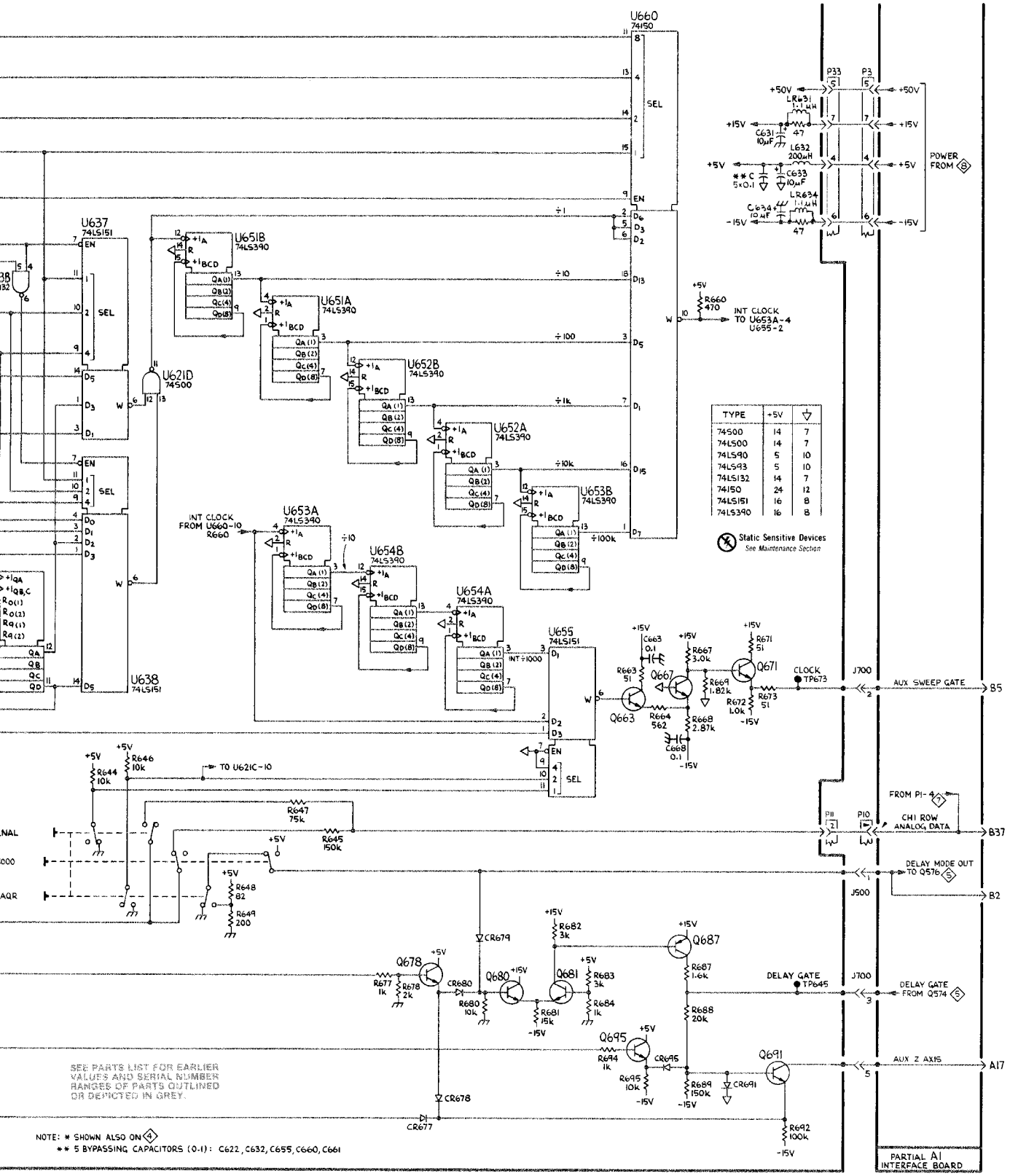

2788-205
REV OCT 1984

CLOCK GENERATOR 6

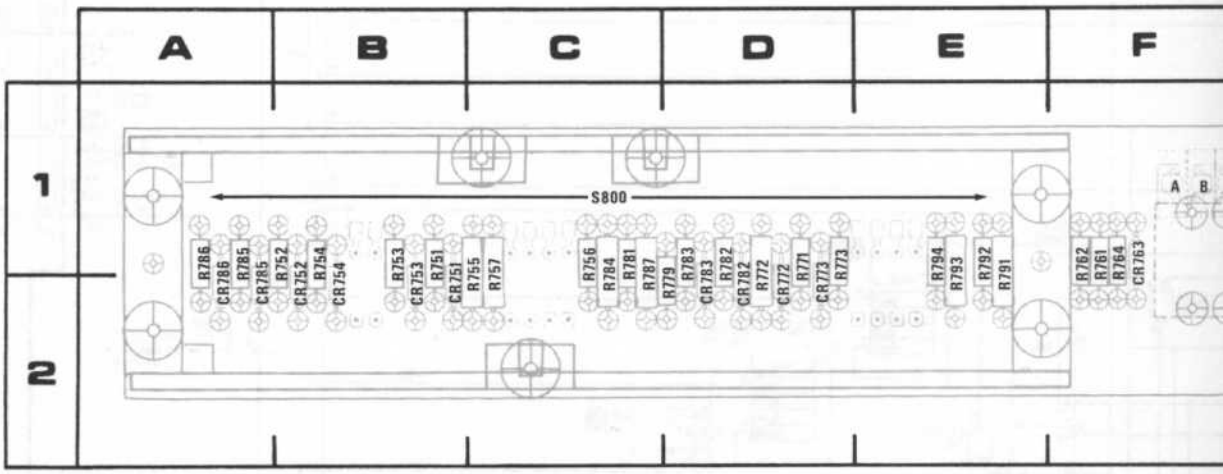

Figure 8-6. A3—Readout circuit board assembly.

CKT NO	GRID COORD	CKT NO	GRID COORD
CR725	1G	R757	1C
CR751	2B	R761	1F
CR752	2B	R763	1H
CR753	2B	R764	1F
CR754	2B	R771	1D
CR763	1F	R772	1D
CR772	2D	R773	1D
CR773	2D	R779	2D
CR782	2D	R781	1C
CR783	2D	R782	1D
CR785	2A	R783	1D
CR786	2A	R784	1C
		R785	1A
P21	1H	R786	1A
		R787	1C
R725	1H	R791	1E
R751	1B	R792	1E
R752	1B	R793	1E
R752	1F	R794	1E
R753	1B		
R754	1B	S725	1G
R755	1C	S800	1C
R756	1C		

Digitally signed by □
http://www.aa4df.com

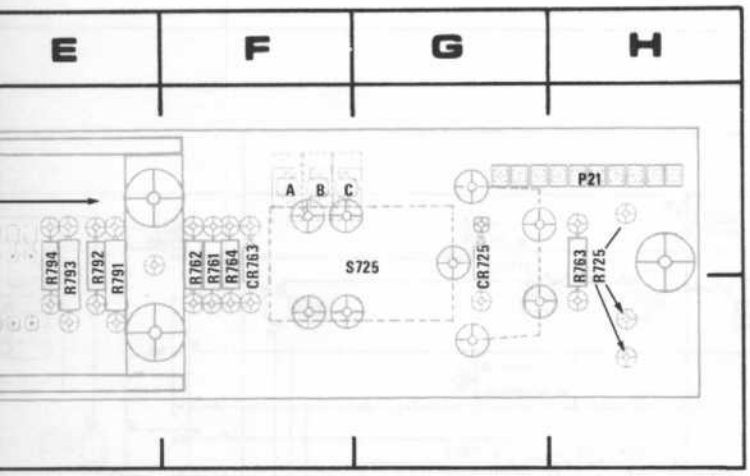

board assembly.

2788-16

CKT NO	GRID COORD
R757	1C
R761	1F
R763	1H
R764	1F
R771	1D
R772	1D
R773	1D
R779	2D
R781	1C
R782	1D
R783	1D
R784	1C
R785	1A
R786	1A
R787	1C
R791	1E
R792	1E
R793	1E
R794	1E
S725	1G
S800	1C

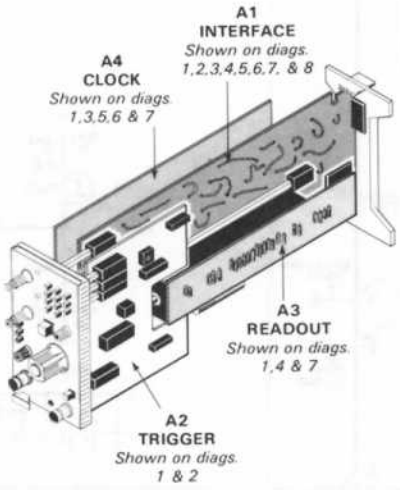

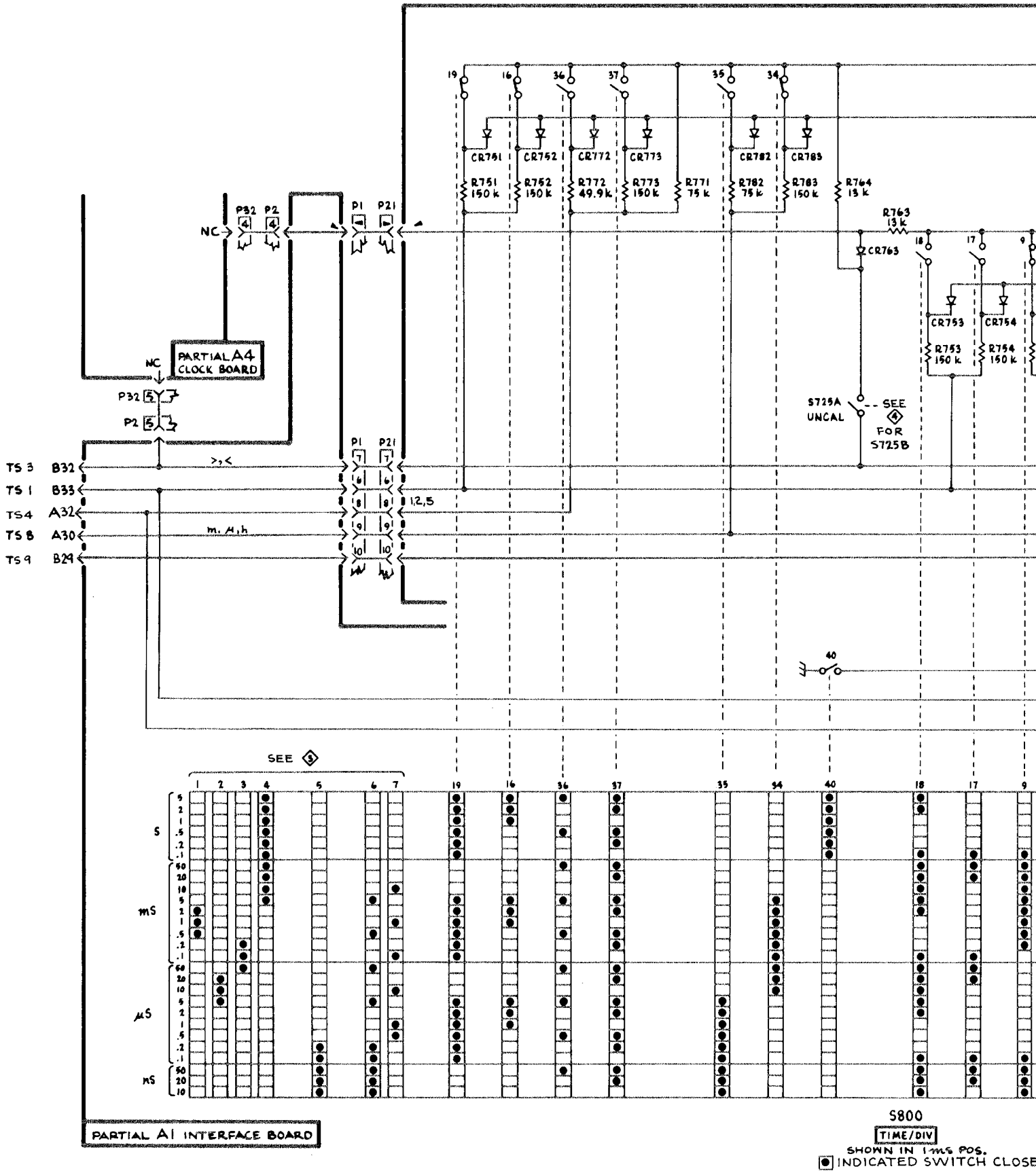

7B87

2788-206
REV OCT 1984

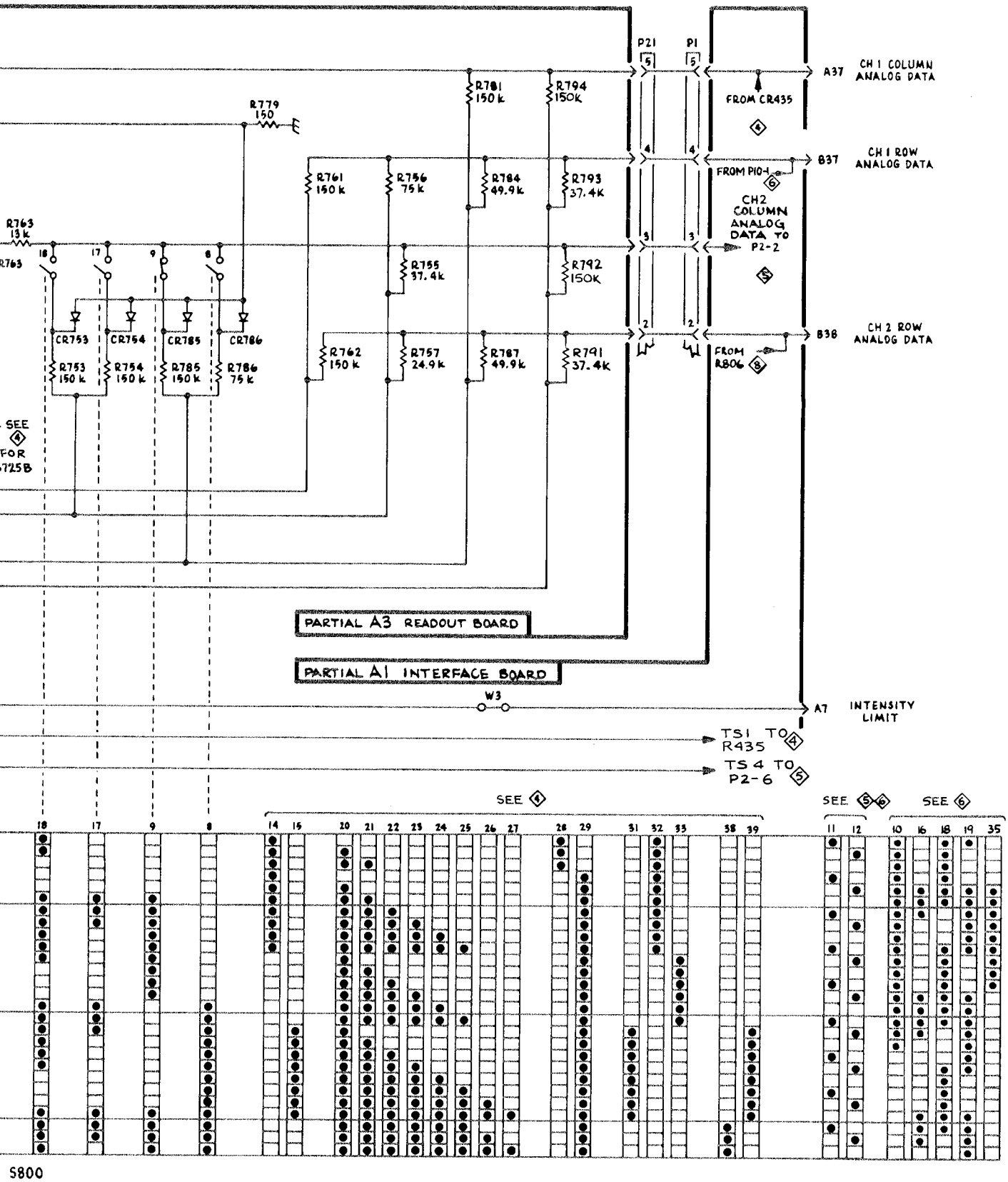

TIME/DIVISION AND READOUT SWITCHING ◇7

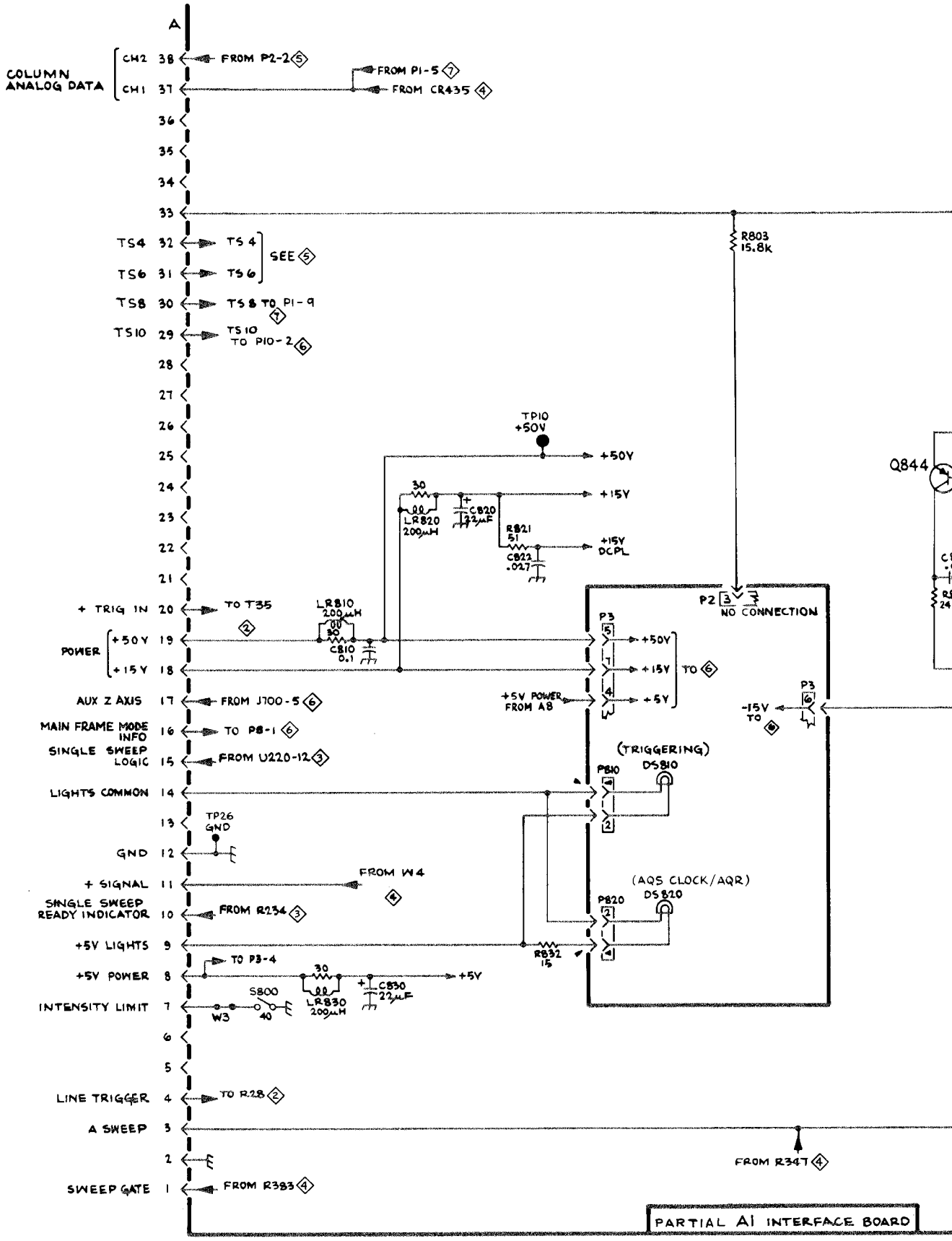
A
COLUMN ANALOG DATA
CH2 38
CH1 37
FROM P2-2 5
FROM P1-5 7
FROM CR435 4
36
35
34
33
R803 15.8k
TS4 32
TS6 31
TS8 30
TS10 29
TS 4
TS 6
SEE 5
TS 8 TO P1-9 7
TS 10 TO P10-2 6
28
27
26
25
24
23
22
21
TP10 +50V
+50V
+15V
30
LR820 200μH
C820 22μF
R821 51
C822 .027
+15V DCPL
Q844
+ TRIG IN 20
TO T35 2
LR810 200μH
C810 0.1
P2 3
NO CONNECTION
POWER
+50Y 19
+15Y 18
P3 5
+50V
+15V
TO 6
AUX Z AXIS 17
FROM J100-5 6
+5V POWER FROM A8
+5V
P3 6
-15V TO 6
MAIN FRAME MODE INFO 16
TO P8-1 6
SINGLE SWEEP LOGIC 15
FROM U220-12 3
(TRIGGERING)
P810
DS810
LIGHTS COMMON 14
13
TP26 GND
GND 12
+ SIGNAL 11
FROM W4 4
(AQS CLOCK/AQR)
P820
DS820
SINGLE SWEEP READY INDICATOR 10
FROM R234 3
+5V LIGHTS 9
R832 15
+5V POWER 8
TO P3-4
30
+5V
C830 22μF
S800
INTENSITY LIMIT 7
W3
40
LR830 200μH
6
5
LINE TRIGGER 4
TO R28 2
A SWEEP 3
FROM R347 4
2
SWEEP GATE 1
FROM R383 4
PARTIAL A1 INTERFACE BOARD

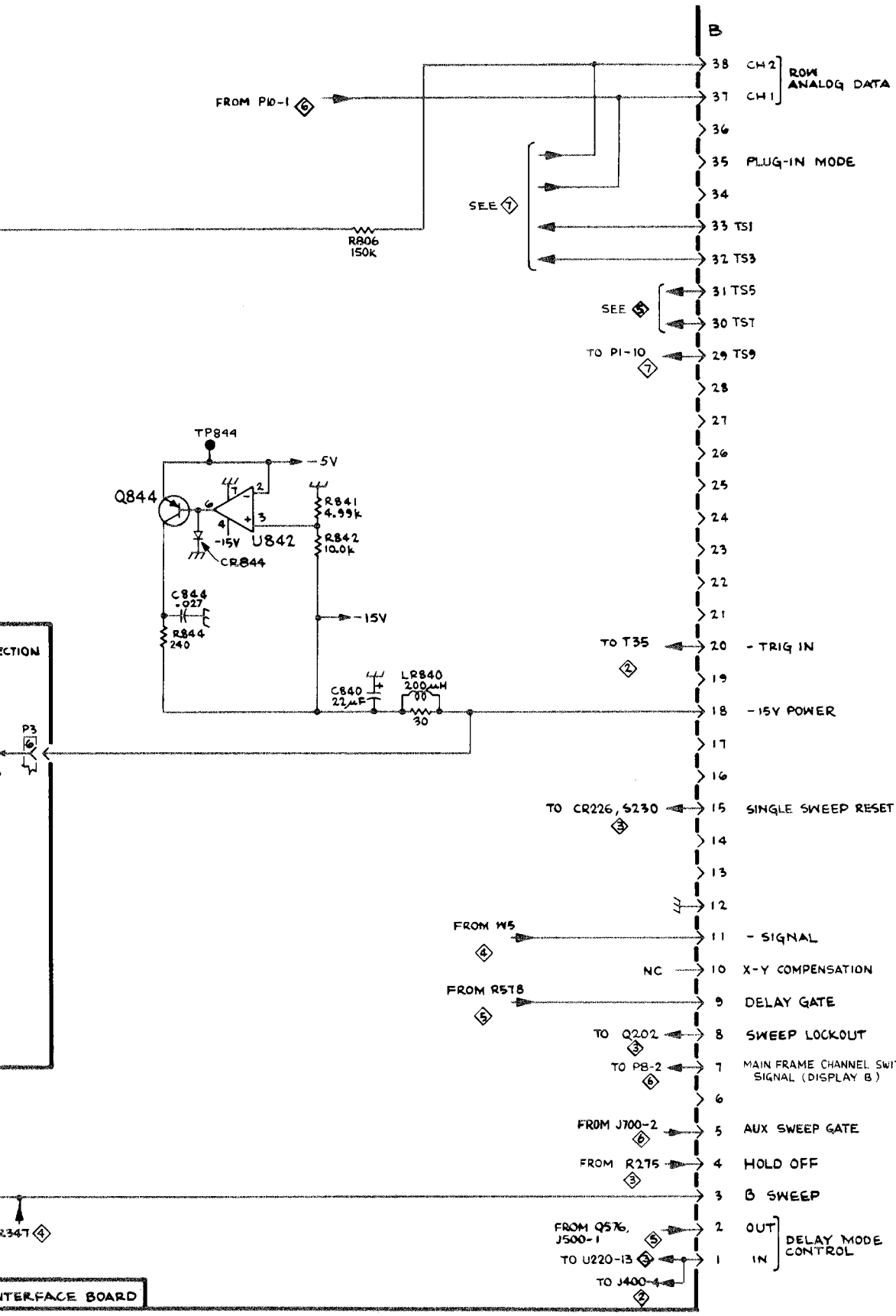

INTERFACE CONNECTORS AND POWER SUPPLY 8

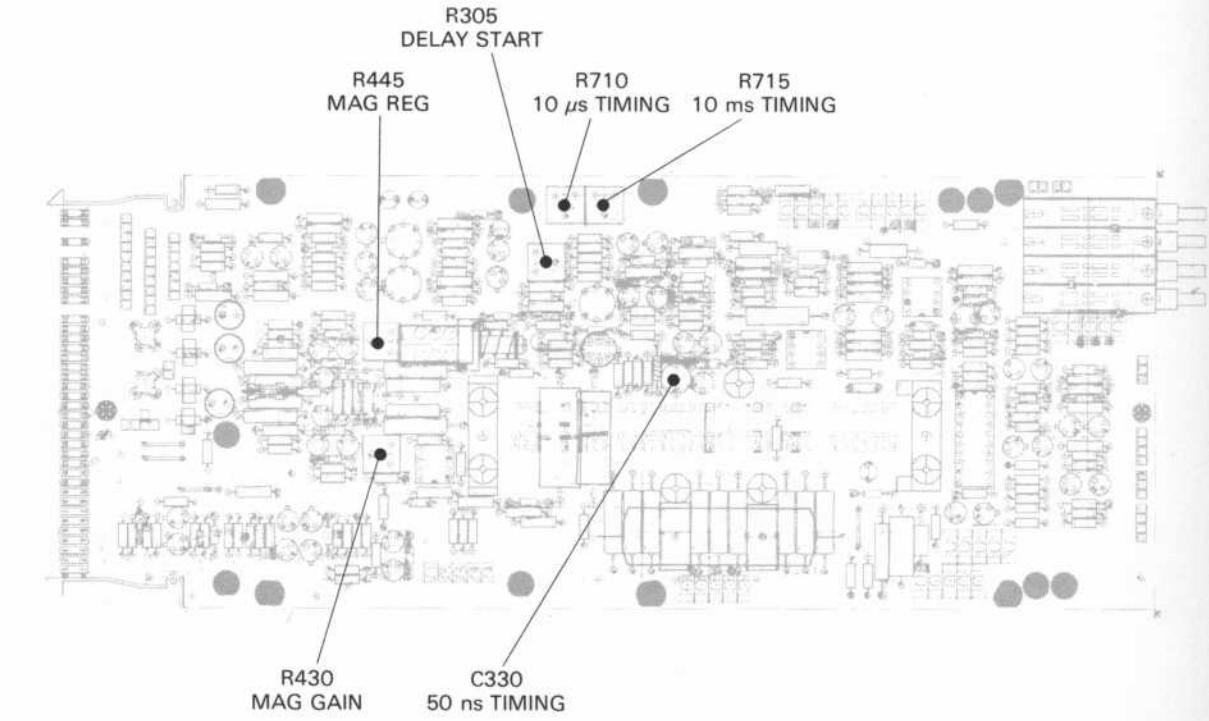

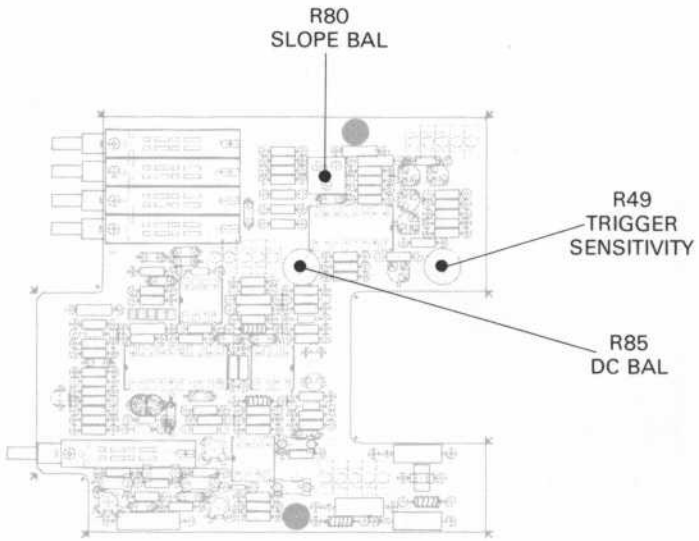

Figure 8-7. Test Point and Adjustment Loca

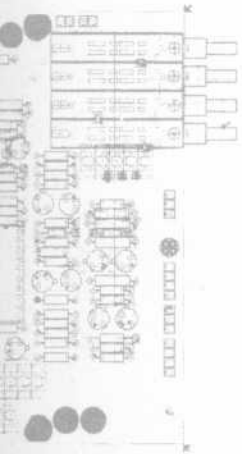

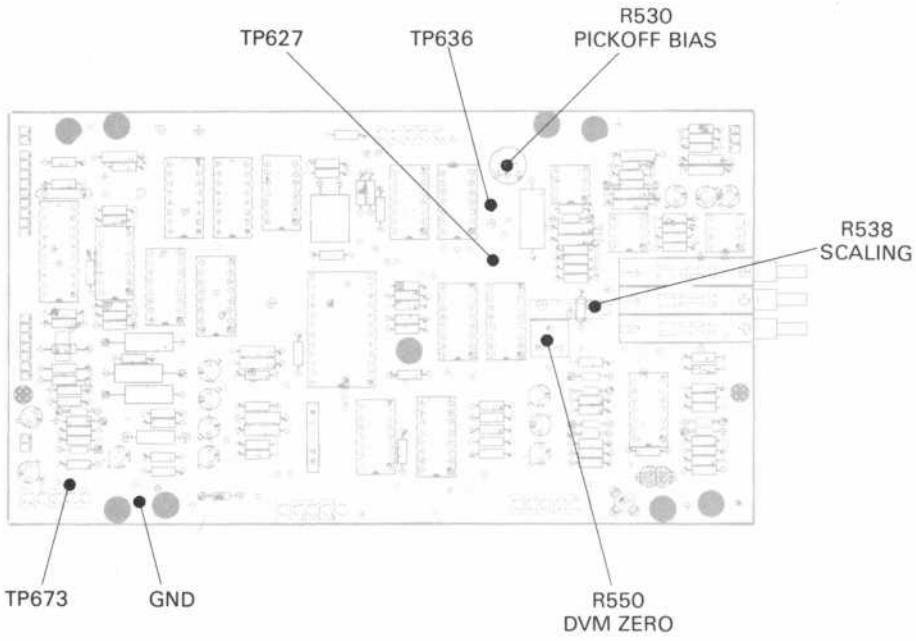

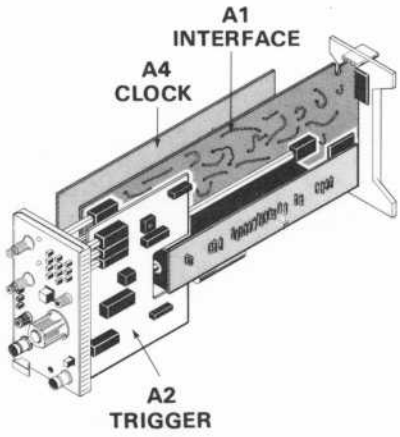

2788-22

oint and Adjustment Locations.

REPLACEABLE MECHANICAL PARTS

PARTS ORDERING INFORMATION

Replacement parts are available from or through your local Tektronix, Inc. Field Office or representative.

Changes to Tektronix instruments are sometimes made to accommodate improved components as they become available, and to give you the benefit of the latest circuit improvements developed in our engineering department. It is therefore important, when ordering parts, to include the following information in your order: Part number, instrument type or number, serial number, and modification number if applicable.

If a part you have ordered has been replaced with a new or improved part, your local Tektronix, Inc. Field Office or representative will contact you concerning any change in part number.

Change information, if any, is located at the rear of this manual.

SPECIAL NOTES AND SYMBOLS

X000	Part first added at this serial number
00X	Part removed after this serial number

FIGURE AND INDEX NUMBERS

Items in this section are referenced by figure and index numbers to the illustrations.

INDENTATION SYSTEM

This mechanical parts list is indented to indicate item relationships. Following is an example of the indentation system used in the description column.

1 2 3 4 5 *Name & Description*

Assembly and/or Component
Attaching parts for Assembly and/or Component
- - - * - - -
Detail Part of Assembly and/or Component
Attaching parts for Detail Part
- - - * - - -
Parts of Detail Part
Attaching parts for Parts of Detail Part
- - - * - - -

Attaching Parts always appear in the same indentation as the item it mounts, while the detail parts are indented to the right. Indented items are part of, and included with, the next higher indentation. The separation symbol - - - * - - - indicates the end of attaching parts.

Attaching parts must be purchased separately, unless otherwise specified.

ITEM NAME

In the Parts List, an Item Name is separated from the description by a colon (:). Because of space limitations, an Item Name may sometimes appear as incomplete. For further Item Name identification, the U.S. Federal Cataloging Handbook H6-1 can be utilized where possible.

ABBREVIATIONS

"	INCH
#	NUMBER SIZE
ACTR	ACTUATOR
ADPTR	ADAPTER
ALIGN	ALIGNMENT
AL	ALUMINUM
ASSEM	ASSEMBLED
ASSY	ASSEMBLY
ATTEN	ATTENUATOR
AWG	AMERICAN WIRE GAGE
BD	BOARD
BRKT	BRACKET
BRS	BRASS
BRZ	BRONZE
BSHG	BUSHING
CAB	CABINET
CAP	CAPACITOR
CER	CERAMIC
CHAS	CHASSIS
CKT	CIRCUIT
COMP	COMPOSITION
CONN	CONNECTOR
COV	COVER
CPLG	COUPLING
CRT	CATHODE RAY TUBE
DEG	DEGREE
DWR	DRAWER
ELCTRN	ELECTRON
ELEC	ELECTRICAL
ELCTLT	ELECTROLYTIC
ELEM	ELEMENT
EPL	ELECTRICAL PARTS LIST
EQPT	EQUIPMENT
EXT	EXTERNAL
FIL	FILLISTER HEAD
FLEX	FLEXIBLE
FLH	FLAT HEAD
FLTR	FILTER
FR	FRAME or FRONT
FSTNR	FASTENER
FT	FOOT
FXD	FIXED
GSKT	GASKET
HDL	HANDLE
HEX	HEXAGON
HEX HD	HEXAGONAL HEAD
HEX SOC	HEXAGONAL SOCKET
HLCPS	HELICAL COMPRESSION
HLEXT	HELICAL EXTENSION
HV	HIGH VOLTAGE
IC	INTEGRATED CIRCUIT
ID	INSIDE DIAMETER
IDENT	IDENTIFICATION
IMPLR	IMPELLER
IN	INCH
INCAND	INCANDESCENT
INSUL	INSULATOR
INTL	INTERNAL
LPHLDR	LAMPHOLDER
MACH	MACHINE
MECH	MECHANICAL
MTG	MOUNTING
NIP	NIPPLE
NON WIRE	NOT WIRE WOUND
OBD	ORDER BY DESCRIPTION
OD	OUTSIDE DIAMETER
OVH	OVAL HEAD
PH BRZ	PHOSPHOR BRONZE
PL	PLAIN or PLATE
PLSTC	PLASTIC
PN	PART NUMBER
PNH	PAN HEAD
PWR	POWER
RCPT	RECEPTACLE
RES	RESISTOR
RGD	RIGID
RLF	RELIEF
RTNR	RETAINER
SCH	SOCKET HEAD
SCOPE	OSCILLOSCOPE
SCR	SCREW
SE	SINGLE END
SECT	SECTION
SEMICOND	SEMICONDUCTOR
SHLD	SHIELD
SHLDR	SHOULDERED
SKT	SOCKET
SL	SLIDE
SLFLKG	SELF-LOCKING
SLVG	SLEEVING
SPR	SPRING
SQ	SQUARE
SST	STAINLESS STEEL
STL	STEEL
SW	SWITCH
T	TUBE
TERM	TERMINAL
THD	THREAD
THK	THICK
TNSN	TENSION
TPG	TAPPING
TRH	TRUSS HEAD
V	VOLTAGE
VAR	VARIABLE
W/	WITH
WSHR	WASHER
XFMR	TRANSFORMER
XSTR	TRANSISTOR

@

CROSS INDEX - MFR. CODE NUMBER TO MANUFACTURER

Mfr. Code	Manufacturer	Address	City, State, Zip Code
01536	TEXTRON INC CAMCAR DIV SEMS PRODUCTS UNIT	1818 CHRISTINA ST	ROCKFORD IL 61108
07707	USM CORP SUB OF EMHART INDUSTRIES INC USM FASTENER DIV	510 RIVER RD	SHELTON CT 06484
08261	SPECTRA-STRIP AN ELTRA CO	7100 LAMPSON AVE	GARDEN GROVE CA 92642
09922	BURNDY CORP	RICHARDS AVE	NORWALK CT 06852
22526	DU PONT E I DE NEMOURS AND CO INC DU PONT CONNECTOR SYSTEMS	30 HUNTER LANE	CAMP HILL PA 17011
22599	AMERACE CORP ESNA DIV	15201 BURBANK BLVD SUITE C	VAN NUYS CA 91411
24546	CORNING GLASS WORKS	550 HIGH ST	BRADFORD PA 16701
27238	BRISTOL INDUSTRIES	630 E LAMBERT RD P O BOX 630	BREA CA 92621
71159	BRISTOL SOCKET SCREW CO		WATERBURY CT
73743	FISCHER SPECIAL MFG CO	446 MORGAN ST	CINCINNATI OH 45206
74445	HOLO-KROME CO	31 BROOK ST	WEST HARTFORD CT 06110
77900	SHAKEPROOF DIV OF ILLINOIS TOOL WORKS	SAINT CHARLES RD	ELGIN IL 60120
78189	ILLINOIS TOOL WORKS INC SHAKEPROOF DIVISION	ST CHARLES ROAD	ELGIN IL 60120
79136	WALDES KOHINOOR INC	47-16 AUSTEL PLACE	LONG ISLAND CITY NY 11101
80009	TEKTRONIX INC	4900 S W GRIFFITH DR P O BOX 500	BEAVERTON OR 97077
83385	MICRODOT MANUFACTURING INC GREER-CENTRAL DIV	3221 W BIG BEAVER RD	TROY MI 48098
83486	ELCO INDUSTRIES INC	1101 SAMUELSON RD	ROCKFORD IL 61101
85471	BOYD INDUSTRIAL RUBBER DIV OF A B BOYD CO	2527 GRANT AVE	SAN LEANDRO CA 94579
87308	N L INDUSTRIES INC N L FASTENERS	BARKLEY RD P O BOX 1360	STATESVILLE NC 28677
93907	TEXTRON INC CAMCAR DIV	600 18TH AVE	ROCKFORD IL 61101
TK0507	O HARA METAL PRODUCTS CO	542 BRANNAN ST	SAN FRANCISCO CA 94107

Fig. & Index No.	Tektronix Part No.	Serial/Assembly No. Effective	Dscont	Qty	12345 Name & Description	Mfr. Code	Mfr. Part No.
1-1	337-1064-04	B010100	B022299	2	SHIELD,ELEC:SIDE FOR PLUG-IN UNIT	80009	337-1064-04
	337-1064-12	B022300		2	SHIELD,ELEC:SIDE FOR PLUG-IN UNIT	80009	337-1064-12
-2	366-1391-02			1	KNOB:LT GY,0.081 ID X 0.28 OD X 0.32 H	80009	366-1391-02
	213-0075-00			1	.SETSCREW:4-40 X 0.094,STL	74445	ORDER BY DESCR
-3	366-1077-00			2	KNOB:GRAY W/SETSCREW	80009	366-1077-00
	213-0246-00			2	.SETSCREW:5-40 X 0.094,STL	71159	ORDER BY DESCR
-4	366-1319-02			1	KNOB:GY,0.079 ID X 0.28 OD X 0.32 H	80009	366-1319-02
	213-0075-00			1	.SETSCREW:4-40 X 0.094,STL	74445	ORDER BY DESCR
-5	426-0681-00			1	FRAME,PUSH BTN:	80009	426-0681-00
-6	366-1189-00			1	KNOB:GY,0.127 ID X 0.5 OD X 0.531	80009	366-1189-00
	213-0246-00			1	.SETSCREW:5-40 X 0.094,STL	71159	ORDER BY DESCR
-7	366-1023-01			1	KNOB:GY,0.127 ID X 0.392 OD X 0.531 H	80009	366-1023-01
	213-0246-00			1	.SETSCREW:5-40 X 0.094,STL	71159	ORDER BY DESCR
-8	366-1166-00			1	KNOB:RED,0.127 ID X 0.392 OD X 0.4 H	80009	366-1166-00
	213-0246-00			1	.SETSCREW:5-40 X 0.094,STL	71159	ORDER BY DESCR
-9	366-1103-00			1	KNOB:GY,0.252 ID X 1.095 OD X 0.79 H	80009	366-1103-00
	213-0153-00			2	.SETSCREW:5-40 X 0.125,STL BK OXD,HEX SKT	27238	ORDER BY DESCR
-10	426-1072-00			1	FRAME,PUSH BTN:SILVER GRAY PLSTC	80009	426-1072-00
-11	366-1058-79			1	KNOB:GRAY,7B87	80009	366-1058-79
					(ATTACHING PARTS)		
-12	214-1095-00			1	PIN,SPRING:0.187 L X 0.094 OD,STL,CD PL	22599	52-022-094-0187
-13	105-0076-02	B010100	B021475	1	RELEASE BAR,LCH:PLUG-IN UNIT	80009	105-0076-02
	105-0076-04	B021476		1	RELEASE BAR,LCH:PLUG-IN UNIT	80009	105-0076-04
-14	214-1280-00			1	SPRING,HLCPS:0.14 OD X 1.126 L,TWIST LOOP, MUSIC WIRE	80009	214-1280-00
					(END ATTACHING PARTS)		
-15	333-1213-17			1	PANEL,FRONT:	80009	333-1213-17
					(ATTACHING PARTS)		
-16	358-0342-00			1	BSHG,MACH THD:.25-32X.159 ID,AL ANOD,.352	80009	358-0342-00
					(END ATTACHING PARTS)		
-17	352-0157-00			2	LAMPHOLDER:(1)T-2 UNBASED,WHITE	80009	352-0157-00
-18	351-0469-00			2	GUIDE,PUSH BTN:4 BUTTON	80009	351-0469-00
-19	351-0469-01			2	GUIDE,PUSH BTN:3 BUTTON	80009	351-0469-01
-20	----- -----			2	CONN,RCPT,ELEC:BNC,FEMALE(SEE J2,J640 REPL)		
-21	348-0235-00			2	SHLD GSKT,ELEK:FINGER TYPE,4.734 L	92101	ORDER BY DESCR
-22	----- -----			1	RESISTOR,VAR:(SEE R705 REPL)		
-23	129-0290-00			1	SPACER,POST:0.635 L,0.25-32 THRU,AL,0.312	80009	129-0290-00
-24	210-0046-00			2	WASHER,LOCK:0.261 ID,INTL,0.018 THK,STL	77900	1214-05-00-0541C
-25	348-0067-00			1	GROMMET,PLASTIC:GRAY,ROUND,0.252 ID	80009	348-0067-00
-26	----- -----			1	RESISTOR,VAR:(SEE R210 REPL)		
					(ATTACHING PARTS)		
-27	210-0583-00			2	NUT,PLAIN,HEX:0.25-32 X 0.312,BRS CD PL	73743	2X-20319-402
-28	210-0046-00			3	WASHER,LOCK:0.261 ID,INTL,0.018 THK,STL	77900	1214-05-00-0541C
					(END ATTACHING PARTS)		
-29	366-1257-93			1	PUSH BUTTON:SIL GY,X1 X10	80009	366-1257-93
-30	384-1292-00			1	EXTENSION SHAFT:2.417 L,GL FILLED NYLON	80009	384-1292-00
-31	384-1100-00			1	EXTENSION SHAFT:6.215 L X 0.187 SQ,PLASTIC	80009	384-1100-00
-32	----- -----			1	RESISTOR,VAR:(SEE R535 REPL)		
					(ATTACHING PARTS)		
-33	210-0583-00			2	NUT,PLAIN,HEX:0.25-32 X 0.312,BRS CD PL	73743	2X-20319-402
-34	210-0046-00			1	WASHER,LOCK:0.261 ID,INTL,0.018 THK,STL	77900	1214-05-00-0541C
					(END ATTACHING PARTS)		
-35	386-3440-00			1	LT CNDCT,PB ILL:3 BUTTON,7.5MM SPACING	80009	386-3440-00
-36	386-3439-00			1	LT CNDCT,PB ILL:10 BUTTON,7.5MM SPACING	80009	386-3439-00
-37	200-0935-00			4	BASE,LAMPHOLDER:0.29 OD X 0.19 L,BK PLSTC	80009	200-0935-00
-38	----- -----			1	RESISTOR,VAR:(SEE R415 REPL)		
					(ATTACHING PARTS)		
-39	210-0583-00			2	NUT,PLAIN,HEX:0.25-32 X 0.312,BRS CD PL	73743	2X-20319-402
-40	210-0046-00			1	WASHER,LOCK:0.261 ID,INTL,0.018 THK,STL	77900	1214-05-00-0541C
					(END ATTACHING PARTS)		
-41	----- -----			1	RESISTOR,VAR:(SEE R410 REPL)		
					(ATTACHING PARTS)		
-42	210-0583-00			1	NUT,PLAIN,HEX:0.25-32 X 0.312,BRS CD PL	73743	2X-20319-402
-43	210-0046-00			1	WASHER,LOCK:0.261 ID,INTL,0.018 THK,STL	77900	1214-05-00-0541C
					(END ATTACHING PARTS)		
-44	386-4181-00			1	SUBPANEL,FRONT:	80009	386-4181-00
					(ATTACHING PARTS)		

Fig. & Index No.	Tektronix Part No.	Serial/Assembly No. Effective	Dscont	Qty	12345 Name & Description	Mfr. Code	Mfr. Part No.
1-45	213-0192-00	B010100	B010389	4	SCREW,TPG,TF:6-32 X 0.5,SPCL TYPE,FILH,STL	87308	ORDER BY DESCR
	213-0793-00	B010390		4	SCREW,TPG,TF:6-32 X 0.4375,TAPTITE,FILH	83486	239-006-406043
					(END ATTACHING PARTS)		
-46	378-0074-00			7	REFLECTOR,LIGHT:PUSH BUTTON	80009	378-0074-00
-47	366-1650-00			14	PUSH BUTTON:CLEAR,0.184 X 0.214 X 8.0	80009	366-1650-00
-48	131-1820-00			7	CONN,PLUG,ELEC:CKT BD,5 CONTACT MALE	22526	65306-002
-49	384-1382-00			7	EXTENSION SHAFT:1.09 L,OFFSET,MLD PLSTC	80009	384-1382-00
-50	------ ------			1	CKT BOARD ASSY:CLOCK(SEE A4 REPL)		
					(ATTACHING PARTS)		
-51	211-0008-00			9	SCREW,MACHINE:4-40 X 0.25,PNH,STL	93907	ORDER BY DESCR
					(END ATTACHING PARTS)		
					CKT BOARD ASSY INCLUDES:		
-52	------ ------			1	.SWITCH PB ASSY:(SEE S205 REPL)		
-53	343-0495-03			1	.CLIP,SWITCH:FRONT,7.5MM X 3 UNIT	80009	343-0495-03
					.(ATTACHING PARTS)		
-54	210-3033-00			3	.EYELET,METALLIC:0.059 OD X 0.156 L,BRS	07707	SE-25
					.(END ATTACHING PARTS)		
-55	343-0499-03			1	.CLIP,SWITCH:REAR,7.5MM X 3 UNIT	80009	343-0499-03
					.(ATTACHING PARTS)		
-56	210-3033-00			3	.EYELET,METALLIC:0.059 OD X 0.156 L,BRS	07707	SE-25
					.(END ATTACHING PARTS)		
-57	136-0252-07			37	.SOCKET,PIN CONN:W/O DIMPLE	22526	75060-012
-58	131-0566-00			1	.BUS,COND:DUMMY RES,0.094 OD X 0.225 L	24546	OMA 07
-59	136-0263-04			20	.SOCKET,PIN TERM:U/W 0.025 SQ PIN	22526	75377-001
-60	253-0176-00			1	.TAPE,PRESS SENS:VINYL FOAM,0.5 X 0.062,	85471	ORDER BY DESCR
-61	214-0579-00			6	.TERM,TEST POINT:	80009	214-0579-00
-62	136-0634-00	B010100	B021627	1	.SKT,PL-IN ELEK:MICROCIRCUIT,20 DIP	09922	DILB20P-108
	136-0752-00	B021628		1	.SKT,PL-IN ELEK:MICROCIRCUIT,20 DIP	09922	DILB20P-108
-63	131-0589-00			22	.TERMINAL,PIN:0.46L X 0.025 SQ BRZ GLD PL	22526	48283-029
-64	131-1003-00			1	.CONN,RCPT,ELEC:CKT BD MT,3 PRONG	80009	131-1003-00
	131-0566-00	B010121		2	.BUS,COND:DUMMY RES,0.094 OD X 0.225 L	24546	OMA 07
-65	337-2671-00	B010100	B010575	1	SHIELD,ELEC:CLOCK	80009	337-2671-00
	337-2671-01	B010576		1	SHIELD,ELEC:CLOCK	80009	337-2671-01
-66	366-1559-00			1	PUSH BUTTON:SIL GY,0.18 SQ X 0.43	80009	366-1559-00
-67	------ ------			1	CKT BOARD ASSY:TRIGGER(SEE A2 REPL)		
					(ATTACHING PARTS)		
-68	211-0008-00			2	SCREW,MACHINE:4-40 X 0.25,PNH,STL	93907	ORDER BY DESCR
					(END ATTACHING PARTS)		
					CKT BOARD ASSY INCLUDES:		
-69	------ ------			1	.SWITCH PB ASSY:(SEE S20 REPL)		
-70	------ ------			1	.SWITCH PB ASSY:(SEE S50 REPL)		
-71	343-0495-04			1	.CLIP,SWITCH:FRONT,7.5MM X 4 UNIT	80009	343-0495-04
					.(ATTACHING PARTS)		
-72	210-3050-00			3	.EYELET,METALLIC:0.059 OD X 0.218 L,BRS	07707	SE-27
-73	210-3033-00			1	.EYELET,METALLIC:0.059 OD X 0.156 L,BRS	07707	SE-25
					.(END ATTACHING PARTS)		
-74	343-0495-03			1	.CLIP,SWITCH:FRONT,7.5MM X 3 UNIT	80009	343-0495-03
-75	343-0499-04	B010100	B010599	1	.CLIP,SWITCH:REAR,7.5MM X 4 UNIT	80009	343-0499-04
	343-0499-13	B010600		1	.CLIP,SWITCH:7.5MM X 4 UNIT	80009	343-0499-13
					.(ATTACHING PARTS)		
-76	210-3050-00			3	.EYELET,METALLIC:0.059 OD X 0.218 L,BRS	07707	SE-27
-77	210-3033-00	B010100	B010599	1	.EYELET,METALLIC:0.059 OD X 0.156 L,BRS	07707	SE-25
	343-0499-12	B010600		1	.CLIP,SWITCH:FRONT,7.5MM X 3 UNIT	80009	343-0499-12
					.(END ATTACHING PARTS)		
-78	343-0499-03	B010100	B010599	1	.CLIP,SWITCH:REAR,7.5MM X 3 UNIT	80009	343-0499-03
	343-0499-12	B010600		1	.CLIP,SWITCH:FRONT,7.5MM X 3 UNIT	80009	343-0499-12
-79	136-0263-04			15	.SOCKET,PIN TERM:U/W 0.025 SQ PIN	22526	75377-001
-80	136-0260-02	B010100	B021627	1	.SKT,PL-IN ELEK:MICROCKT,16 DIP,LOW CL	09922	DILB16P-108T
	136-0729-00	B021628		1	.SKT,PL-IN ELEK:MICROCKT,16 CONTACT	09922	DILB16P-108T
-81	136-0514-00	B010100	B021627	3	.SKT,PL-IN ELEK:MICROCIRCUIT,8 DIP	09922	DILB8P-108
	136-0727-00	B021628		3	.SKT,PL-IN ELEK:MICROCKT,8 CONTACT	09922	DILB8P-108
-82	136-0634-00	B010100	B021627	1	.SKT,PL-IN ELEK:MICROCIRCUIT,20 DIP	09922	DILB20P-108
	136-0752-00	B021628		1	.SKT,PL-IN ELEK:MICROCIRCUIT,20 DIP	09922	DILB20P-108
-83	214-0579-00			2	.TERM,TEST POINT:	80009	214-0579-00
-84	------ ------			1	.SWITCH PB ASSY:(SEE S10 REPL)		
-85	343-0499-01			1	.CLIP,SWITCH:REAR,7.5MM X 1 UNIT	80009	343-0499-01
					.(ATTACHING PARTS)		

Fig. & Index No.	Tektronix Part No.	Serial/Assembly No. Effective	Dscont	Qty	12345 Name & Description	Mfr. Code	Mfr. Part No.
1-86	210-3033-00			1	.EYELET,METALLIC:0.059 OD X 0.156 L,BRS	07707	SE-25
					.(END ATTACHING PARTS)		
-87	214-0973-00			1	.HEAT SINK,XSTR:TO-92,CU BE CO PL	80009	214-0973-00
-88	343-0495-01			1	.CLIP,SWITCH:FRONT,7.5MM X 1 UNIT	80009	343-0495-01
					.(ATTACHING PARTS)		
-89	210-3033-00			1	.EYELET,METALLIC:0.059 OD X 0.156 L,BRS	07707	SE-25
					.(END ATTACHING PARTS)		
-90	136-0252-07			24	.SOCKET,PIN CONN:W/O DIMPLE	22526	75060-012
-91	131-1003-00			3	.CONN,RCPT,ELEC:CKT BD MT,3 PRONG	80009	131-1003-00
-92	131-0608-00			5	.TERMINAL,PIN:0.365 L X 0.025 BRZ GLD PL	22526	48283-036
-93	129-0198-00			4	SPACER,POST:0.75 L,4-40 EA END,BRS,0.188	80009	129-0198-00
					(ATTACHING PARTS)		
-94	211-0008-00			4	SCREW,MACHINE:4-40 X 0.25,PNH,STL	93907	ORDER BY DESCR
					(END ATTACHING PARTS)		
-95	204-0683-00			7	CONN BODY,RCPT:5 FEMALE PV CONTACTS	22526	65058-001
-96	386-1402-00			1	PANEL,REAR:	80009	386-1402-00
					(ATTACHING PARTS)		
-97	213-0192-00	B010100	B010389	4	SCREW,TPG,TF:6-32 X 0.5,SPCL TYPE,FILH,STL	87308	ORDER BY DESCR
	213-0793-00	B010390		4	SCREW,TPG,TF:6-32 X 0.4375,TAPTITE,FILH	83486	239-006-406043
					(END ATTACHING PARTS)		
	672-0829-00	B010100	B023285	1	CIRCUIT BD ASSY:TIME/CM	80009	672-0829-00
	672-0829-01	B023286		1	CIRCUIT BD ASSY:TIME/CM	80009	672-0829-01
					(ATTACHING PARTS)		
-98	211-0008-00			6	SCREW,MACHINE:4-40 X 0.25,PNH,STL	93907	ORDER BY DESCR
					(END ATTACHING PARTS)		
					CKT BOARD ASSY INCLUDES:		
-99	200-1362-00			2	.COVER,CAM SW:30 ELEMENTS	80009	200-1362-00
					.(ATTACHING PARTS)		
-100	211-0244-00	B010100	B010670	6	.SCR,ASSEM WSHR:4-40 X 0.312,PNH STL	01536	ORDER BY DESCR
	211-0292-00	B010671		6	.SCR,ASSEM WSHR:4-40 X 0.29,PNH,BRS	78189	51-040445-01
-101	210-0406-00			6	.NUT,PLAIN,HEX:4-40 X 0.188,BRS CD PL	73743	12161-50
					.(END ATTACHING PARTS)		
-102	----- -----			1	.CKT BOARD ASSY:READOUT(SEE A3 REPL)		
					.(ATTACHING PARTS)		
-103	211-0008-00			1	.SCREW,MACHINE:4-40 X 0.25,PNH,STL	93907	ORDER BY DESCR
-104	211-0244-00	B010100	B010670	7	.SCR,ASSEM WSHR:4-40 X 0.312,PNH STL	01536	ORDER BY DESCR
	211-0292-00	B010671		7	.SCR,ASSEM WSHR:4-40 X 0.29,PNH,BRS	78189	51-040445-01
					.(END ATTACHING PARTS)		
					.CKT BOARD ASSY INCLUDES:		
-105	131-0604-00			13	..CONTACT,ELEC:CKT BD SW,SPR,CU BE	80009	131-0604-00
-106	131-0589-00			10	..TERMINAL,PIN:0.46L X 0.025 SQ BRZ GLD PL	22526	48283-029
-107	136-0263-04			3	..SOCKET,PIN TERM:U/W 0.025 SQ PIN	22526	75377-001
-108	----- -----			1	.RESISTOR,VAR:(SEE R725 REPL)		
					.(ATTACHING PARTS)		
-109	210-0583-00			1	.NUT,PLAIN,HEX:0.25-32 X 0.312,BRS CD PL	73743	2X-20319-402
-110	210-0046-00			1	.WASHER,LOCK:0.261 ID,INTL,0.018 THK,STL	77900	1214-05-00-0541C
					.(END ATTACHING PARTS)		
-111	407-0803-00			1	.BRACKET,ELEC SW:BRASS	80009	407-0803-00
-112	351-0180-00			1	.GUIDE,SLIDE SW:SWITCH ACTUATOR	80009	351-0180-00
-113	214-1136-00			1	.ACTUATOR,SL SW:VARIABLE CAL	80009	214-1136-00
-114	214-1190-00			1	.CPLG,SHAFT,RGD:0.125 OD TO 0.125 OD,AL	80009	214-1190-00
-115	129-0570-00			1	.SPACER,POST:0.976 L,4-40 INT EA END,0.188	80009	129-0570-00
					.(ATTACHING PARTS)		
-116	211-0008-00			1	.SCREW,MACHINE:4-40 X 0.25,PNH,STL	93907	ORDER BY DESCR
					.(END ATTACHING PARTS)		
-117	131-0593-00			3	.TERMINAL,PIN:1.15 L X 0.025 SQ BRS TIN	22526	47354
-118	352-0274-00			1	.HOLDER,TERMINAL:8 SQUARE PINS	80009	352-0274-00
-119	----- -----			1	.SWITCH,PUSH:(SEE R435 REPL)		
-120	361-0411-00			2	.SPACER,PUSH SW:0.109 L,BLUE POLYCARBONATE	80009	361-0411-00
-121	136-0252-07			5	.SOCKET,PIN CONN:W/O DIMPLE	22526	75060-012
					.ACTR ASSY,CAM S:(SEE S800 REPL)		
					.(ATTACHING PARTS)		
-122	211-0244-00	B010100	B010670	4	.SCR,ASSEM WSHR:4-40 X 0.312,PNH STL	01536	ORDER BY DESCR
	211-0292-00	B010671		4	.SCR,ASSEM WSHR:4-40 X 0.29,PNH,BRS	78189	51-040445-01
					.(END ATTACHING PARTS)		
					.ACTUATOR ASSY INCLUDES:		
-123	210-0406-00			7	..NUT,PLAIN,HEX:4-40 X 0.188,BRS CD PL	73743	12161-50

Fig. & Index No.	Tektronix Part No.	Serial/Assembly No. Effective	Dscont	Qty	12345 Name & Description	Mfr. Code	Mfr. Part No.
1-124	214-1139-03			2	..SPRING,FLAT:0.885 X 0.156 CU BE RED CLR	80009	214-1139-03
-125	214-1752-00			2	..ROLLER,DETENT:0.125 OD X 0.16,SST	80009	214-1752-00
	214-1139-00	B010900		1	..SPRING,FLAT:0.885 X 0.156 CU BE GLD CLR	80009	214-1139-00
	214-1139-02	B010900		1	..SPRING,FLAT:0.885 X 0.156 CU BE GRN CLR	80009	214-1139-02
-126	401-0180-00			1	..BEARING,CAM SM:FR & REAR,0.8 & 0.83 DIA	80009	401-0180-00
	214-1139-00	B010900		1	..SPRING,FLAT:0.885 X 0.156 CU BE GLD CLR	80009	214-1139-00
	214-1139-02	B010900		1	..SPRING,FLAT:0.885 X 0.156 CU BE GRN CLR	80009	214-1139-02
					..(ATTACHING PARTS)		
-127	354-0390-00			1	..RING,RETAINING:BASIC EXT,U/O 0.375DIA SFT	79136	5100-37-Z0
					..(END ATTACHING PARTS)		
-128	384-0878-08			1	..SHAFT,CAM SM:4.964 L X 0.248 OD OUTER CON	80009	384-0878-08
					..CENTRIC W/DRIVER		
-129	105-0826-00			1	..ACTUATOR,CAM SM:TIME/CM,DRUM	80009	105-0826-00
-130	401-0178-04			1	..BEARING,CAM SM:CENTER/REAR	80009	401-0178-04
-131	352-0196-00			2	.HOLDER,RESISTOR:PANEL MOUNT,DELRIN	80009	352-0196-00
-132	131-0963-00			1	.CONTACT,ELEC:GROUNDING,PH BRZ,W/BRACKET	TK0507	ORDER BY DESCR
-133	384-1417-00			1	.EXTENSION SHAFT:10.275 L X 0.125 OD,AL	80009	384-1417-00
-134	------ ------			1	.SWITCH PB ASSY:(SEE S230 REPL)		
-135	------ ------			1	.CKT BOARD ASSY:INTERFACE(SEE A1 REPL)		
					.(REPLACEABLE AS A UNIT WITH 672-0829-XX)		
-136	136-0634-00	B010100	B021627	1	..SKT,PL-IN ELEK:MICROCIRCUIT,20 DIP	09922	DILB20P-108
	136-0752-00	B021628		1	..SKT,PL-IN ELEK:MICROCIRCUIT,20 DIP	09922	DILB20P-108
-137	343-0495-04			1	..CLIP,SWITCH:FRONT,7.5MM X 4 UNIT	80009	343-0495-04
					..(ATTACHING PARTS)		
-138	210-3033-00			4	..EYELET,METALLIC:0.059 OD X 0.156 L,BRS	07707	SE-25
					..(END ATTACHING PARTS)		
-139	343-0499-04	B010100	B010599	1	..CLIP,SWITCH:REAR,7.5MM X 4 UNIT	80009	343-0499-04
	343-0499-13	B010600		1	..CLIP,SWITCH:7.5MM X 4 UNIT	80009	343-0499-13
					..(ATTACHING PARTS)		
-140	210-3033-00			4	..EYELET,METALLIC:0.059 OD X 0.156 L,BRS	07707	SE-25
					..(END ATTACHING PARTS)		
-141	136-0514-00	B010100	B021627	3	..SKT,PL-IN ELEK:MICROCIRCUIT,8 DIP	09922	DILB8P-108
	136-0727-00	B021628		3	..SKT,PL-IN ELEK:MICROCKT,8 CONTACT	09922	DILB8P-108
-142	136-0263-04			35	..SOCKET,PIN TERM:U/W 0.025 SQ PIN	22526	75377-001
-143	131-0604-00			32	..CONTACT,ELEC:CKT BD SM,SPR,CU BE	80009	131-0604-00
-144	214-0579-00			5	..TERM,TEST POINT:	80009	214-0579-00
-145	136-0252-07	B010100	B011049	137	..SOCKET,PIN CONN:W/O DIMPLE	22526	75060-012
	136-0252-07	B011050		134	..SOCKET,PIN CONN:W/O DIMPLE	22526	75060-012
-146	131-0566-00			4	..BUS,COND:DUMMY RES,0.094 OD X 0.225 L	24546	OMA 07
-147	131-0608-00			48	..TERMINAL,PIN:0.365 L X 0.025 BRZ GLD PL	22526	48283-036
-148	131-1003-00			2	..CONN,RCPT,ELEC:CKT BD MT,3 PRONG	80009	131-1003-00
-149	214-1054-00			1	SPRING,FLAT:0.825 X 0.322,SST	80009	214-1054-00
-150	105-0075-00			1	BOLT,LATCH:	80009	105-0075-00
-151	220-0547-01			6	NUT BLOCK:4-40 X 0.282,NI SIL NP	80009	220-0547-01
					(ATTACHING PARTS)		
-152	211-0101-00			6	SCREW,MACHINE:4-40 X 0.250,FLH,100 DG,STL	83385	ORDER BY DESCR
					(END ATTACHING PARTS)		
-153	426-0499-11			1	FR SECT,PLUG-IN:BOTTOM	80009	426-0499-11
-154	214-1061-00			1	CONTACT,ELEC:GROUNDING,CU BE	80009	214-1061-00
-155	426-0505-11			1	FR SECT,PLUG-IN:TOP	80009	426-0505-11
	198-4213-00			1	WIRE SET,ELEC:	80009	198-4213-00
-156	131-0707-00			60	.CONTACT,ELEC:22-26 AWG,BRS,CU BE GLD PL	22526	47439-000
-157	175-0825-00			AR	.CABLE,SP,ELEC:2,26 AWG,STRD,PVC JKT,RBN	80009	175-0825-00
-158	175-0830-00			AR	.CABLE,SP,ELEC:7,26 AWG,STRD,PVC JKT,RBN	08261	111-2699-972
-159	175-0832-00			AR	.CABLE,SP,ELEC:9,26 AWG,STRD,PVC JKT,RBN	08261	111-2699-956
-160	175-0833-00			AR	.CABLE,SP,ELEC:10,26 AWG STRD,PVC JKT,RBN	08261	111-2699-970
-161	352-0169-01			2	.HLDR,TERM CONN:2 WIRE,BROWN	80009	352-0169-01
	352-0169-08			2	.HLDR,TERM CONN:2 WIRE,GRAY	80009	352-0169-08
-162	352-0165-03			2	.HLDR,TERM CONN:7 WIRE,ORANGE	80009	352-0165-03
-163	352-0167-02			2	.HLDR,TERM CONN:9 WIRE,RED	80009	352-0167-02
-164	352-0168-00			2	.HLDR,TERM CONN:10 WIRE,BLACK	80009	352-0168-00
	198-4214-00			1	WIRE SET,ELEC:	80009	198-4214-00
	131-0707-00			26	.CONTACT,ELEC:22-26 AWG,BRS,CU BE GLD PL	22526	47439-000
	175-0825-00			AR	.CABLE,SP,ELEC:2,26 AWG,STRD,PVC JKT,RBN	80009	175-0825-00
-165	175-0826-00			AR	.CABLE,SP,ELEC:3,26 AWG,STRD,PVC JKT,RBN	80009	175-0826-00
-166	175-0827-00			AR	.CABLE,SP,ELEC:4,26 AWG,STRD,PVC JKT,RBN	08261	111-2699-954
-167	175-0828-00			AR	.CABLE,SP,ELEC:5,26 AWG,STRD,PVC JKT,RBN	08261	111-2699-955

Fig. & Index No.	Tektronix Part No.	Serial/Assembly No. Effective	Dscont	Qty	12345 Name & Description	Mfr. Code	Mfr. Part No.
1-	352-0163-06			1	.HLDR,TERM CONN:5 WIRE,BLUE	80009	352-0163-06
	352-0169-00			2	.HLDR,TERM CONN:2 WIRE,BLACK	80009	352-0169-00
-168	352-0161-00			1	.HLDR,TERM CONN:3 WIRE,BLACK	80009	352-0161-00
	352-0161-05			1	.HLDR,TERM CONN:3 WIRE,GREEN	80009	352-0161-05
	352-0161-07			1	.HLDR,TERM CONN:3 WIRE,VIOLET	80009	352-0161-07
-169	352-0162-00			1	.HLDR,TERM CONN:4 WIRE,BLACK	80009	352-0162-00
	352-0162-04			1	.HLDR,TERM CONN:4 WIRE,YELLOW	80009	352-0162-04
					STANDARD ACCESSORIES		
	070-2788-00			1	MANUAL,TECH:INSTR	80009	070-2788-00

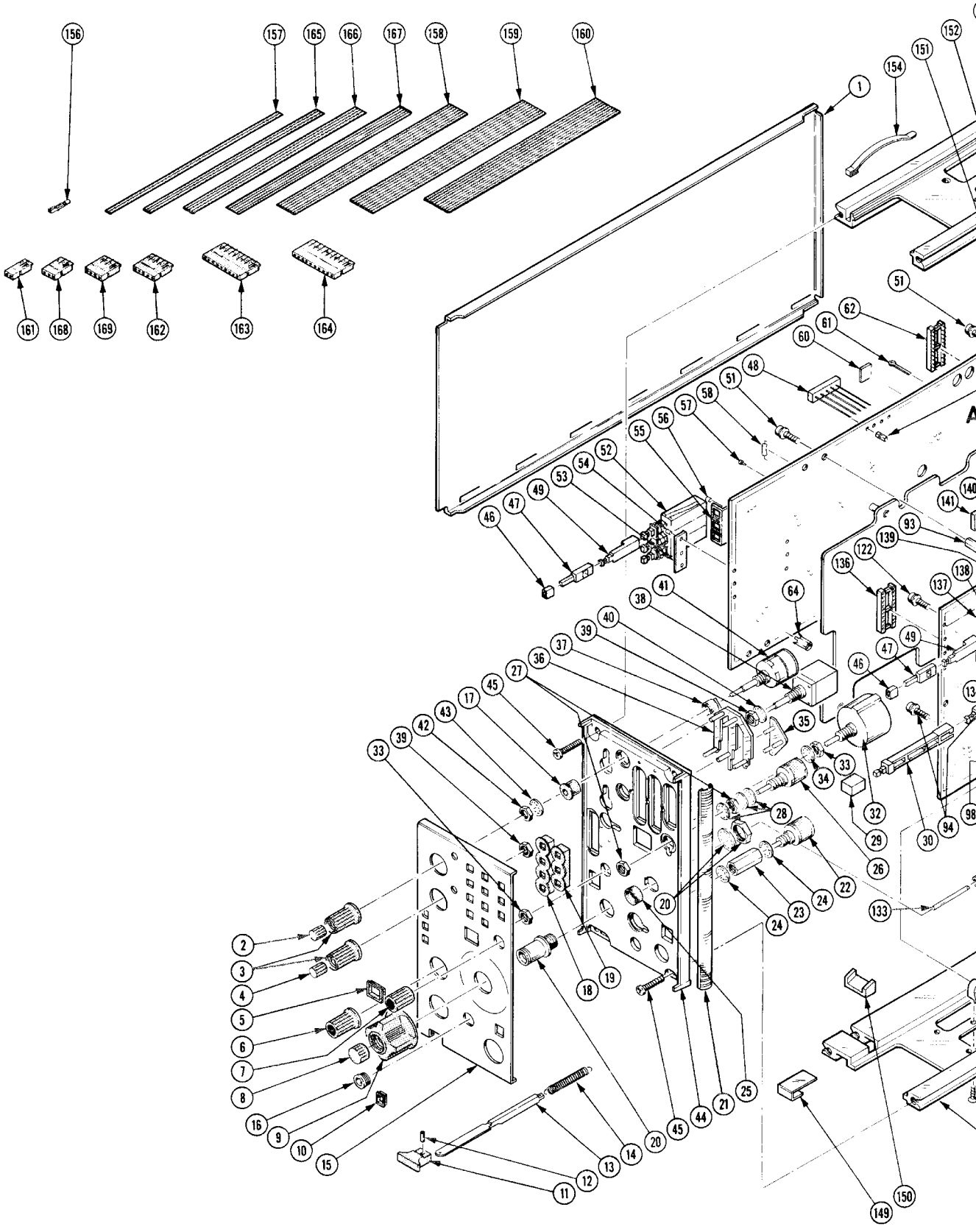
156
157
165
166
167
158
159
160
161
168
169
162
163
164
1
154
151
152
51
62
61
60
48
58
57
56
55
54
53
52
49
47
46
140
141
93
139
122
136
138
137
64
41
38
40
39
37
36
27
45
17
43
42
39
33
35
34
33
32
29
30
94
98
28
26
22
24
23
24
20
133
2
3
4
5
6
7
8
16
9
10
15
18
19
20
45
44
21
25
13
14
12
11
149
150

@

FIG. 1 EXPLODED

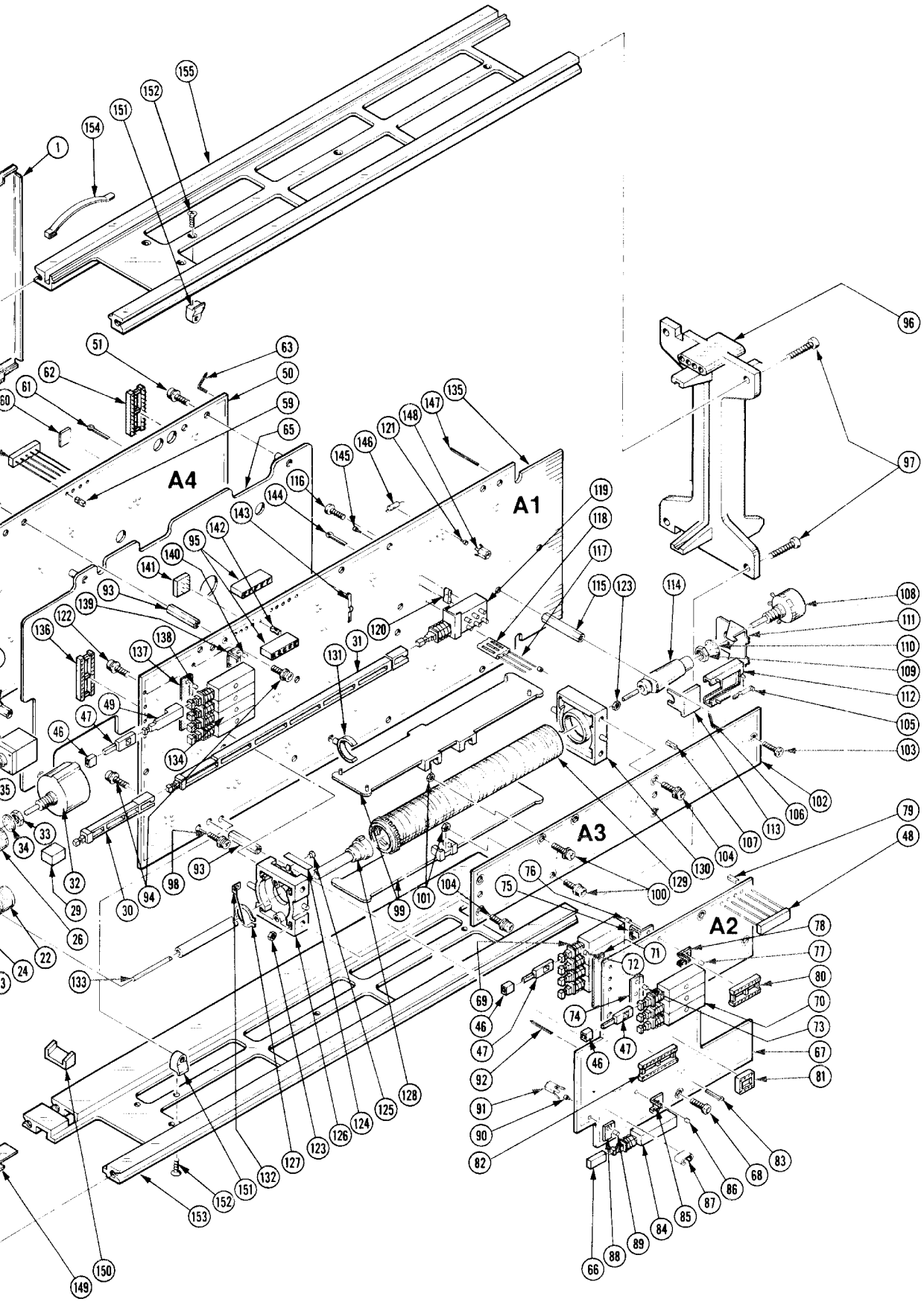

@

7B87 TIME BASE

MANUAL CHANGE INFORMATION

At Tektronix, we continually strive to keep up with latest electronic developments by adding circuit and component improvements to our instruments as soon as they are developed and tested.

Sometimes, due to printing and shipping requirements, we can't get these changes immediately into printed manuals. Hence, your manual may contain new change information on following pages.

A single change may affect several sections. Since the change information sheets are carried in the manual until all changes are permanently entered, some duplication may occur. If no such change pages appear following this page, your manual is correct as printed.

Tektronix®
COMMITTED TO EXCELLENCE

MANUAL CHANGE INFORMATION

Date: 2/10/1986 **Change Reference:** M57812

Product: 7B87 Time Base **Manual Part No.:** 070-2788-00

DESCRIPTION Manual Insert for Product Group 42

These changes are effective at serial number B023665.

REPLACEABLE ELECTRICAL PARTS LIST CHANGES

CHANGE TO:

A1	----- -----	CKT BOARD ASSY:INTERFACE (REPLACEABLE AS A UNIT WITH 672-0829-02)
A1R227	315-0201-00	RES.,FXD,FILM:200 OHM,5%,0.25W
DS220	150-1078-00	LT EMITTING DIO:GREEN,565NM,20MA

DIAGRAM CHANGES

SECTION 8 DIAGRAMS AND CIRCUIT BOARD ILLUSTRATIONS

LOGIC ◇3

Change R227 from 120 to 200. R227 is located in the center-right portion of the schematic.