TEKTRONIX®

7D15

UNIVERSAL COUNTER/TIMER

INSTRUCTION MANUAL

Tektronix, Inc.
P.O. Box 500
Beaverton, Oregon 97077

Serial Number _____

070-1433-00

First Printing SEP 1974

WARRANTY

All TEKTRONIX instruments are warranted against defective materials and workmanship for one year. Any questions with respect to the warranty should be taken up with your TEKTRONIX Field Engineer or representative.

All requests for repairs and replacement parts should be directed to the TEKTRONIX Field Office or representative in your area. This will assure you the fastest possible service. Please include the instrument Type Number or Part Number and Serial Number with all requests for parts or service.

Specifications and price change privileges reserved.

Copyright © 1974 by Tektronix, Inc., Beaverton, Oregon. Printed in the United States of America. All rights reserved. Contents of this publication may not be reproduced in any form without permission of Tektronix, Inc.

U.S.A. and foreign TEKTRONIX products covered by U.S. and foreign patents and/or patents pending.

TEKTRONIX is a registered trademark of Tektronix, Inc.

TABLE OF CONTENTS

		Page
SECTION 1	SPECIFICATION	
	Introduction	1-1
	Electrical Characteristics	1-1
	Environmental Characteristics	1-7
	Physical Characteristics	1-7
SECTION 2	OPERATING INSTRUCTIONS	
	Installation	2-1
	Front Panel Controls and Connectors	2-2
	Modes of Operation	2-7
	Operation and Checkout	2-10
SECTION 3	CIRCUIT DESCRIPTION	
	Introduction	3-1
	Block Diagram Description	3-1
	General	3-1
	Input	3-1
	Clock	3-1
	Gate	3-2
	Counters and Readout	3-7
	Reset	3-7
	Trigger Input Amplifiers	3-8
	Time Base	3-8
	Arm Inputs	3-9
	Reset Circuitry	3-9
	Readout Theory	3-10
	General	3-10
	CH 1 Column and Row Data	3-10
	CH 2 Column and Row Data	3-12
	Overflow	3-13
	−5 V Supply	3-14
SECTION 4	MAINTENANCE	
	Introduction	4-1
	Preventive Maintenance	4-1
	Troubleshooting	4-1
	Corrective Maintenance	4-3
	Component Replacement	4-4
	Recalibration After Repair	4-4
SECTION 5	CALIBRATION	
	Introduction	5-1
	Test Equipment Required	5-1
	Calibration Procedure	5-4
	Index to Calibration Procedure	5-5
SECTION 6	ELECTRICAL PARTS LIST	
	Abbreviations and Symbols	
SECTION 7	DIAGRAMS AND CIRCUIT BOARD ILLUSTRATIONS	
	Symbols and Reference Designators	
SECTION 8	MECHANICAL PARTS LIST	
CHANGE INFORMATION		

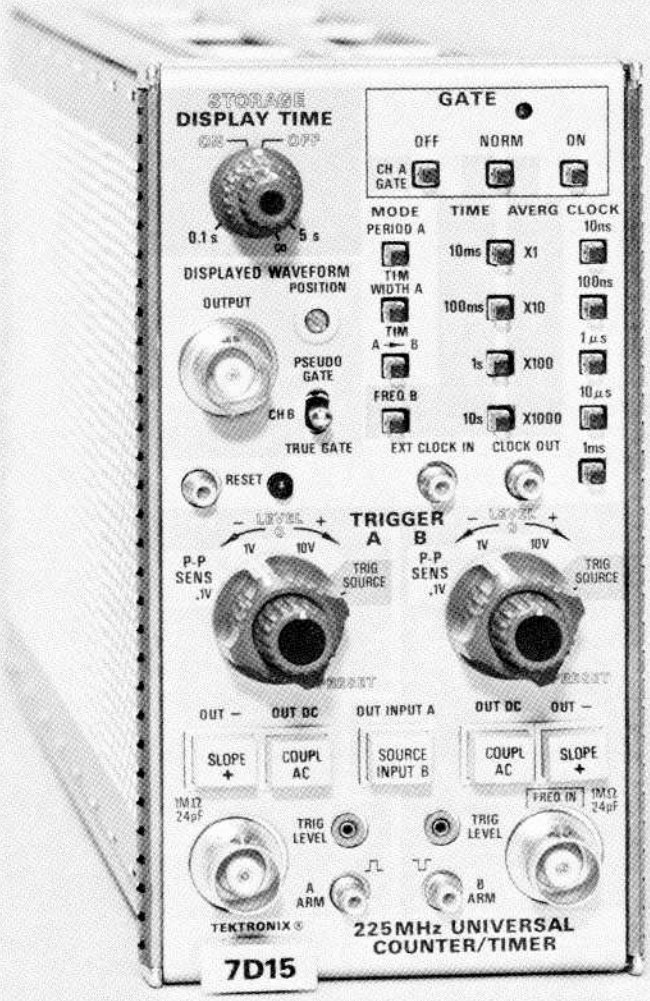

1432-1

Fig. 1-1. 7D15 Universal Counter/Timer.

SPECIFICATIONS

Introduction

The 7D15 is a digital counter plug-in designed for use with all readout-equipped 7000-Series Oscilloscope mainframes. It will function in any plug-in compartment; however, in the vertical compartment, a selectable display is internally connected to the oscilloscope. When used in the horizontal compartment, mainframe triggers are available to the 7D15.

The 7D15 has eight modes of operation: Frequency—DC to 225 MHz direct, Frequency Ratio—0 to 10^5:1, Period—10 ns to 10^5 s, Period Averaging— 10 ps resolution, TIM— 10 ns to 10^5 s, TIM Averaging—1 ns accuracy, Totalize—1 to 10^8 events, Manual Stop Watch—to 10^5 s.

The electrical specifications listed in the Performance Requirement column are valid over the stated environmental range for instruments calibrated at an ambient temperature of +20°C to +30°C and after a five minute warmup unless otherwise noted. The electrical specifications listed in the Supplemental Information column indicate typical instrument operation and is not intended to be construed as a requirement for proper instrument operation.

TABLE 1-1

ELECTRICAL CHARACTERISTICS

Characteristics	Performance Requirement
MEASUREMENT MODES	
Frequency Mode	
Range	DC to 225 megahertz
Resolution	0.1 hertz minimum
[1] Accuracy	E_{freq} (hertz) = $\pm$ TB X $F_{in} \pm 1/T$ E_{freq} (%) = 100% $\left[\pm TB \pm \frac{1}{T \times F_{in}}\right]$
Period Mode	
Range	10 nanoseconds to 10^5 seconds with averaging times of X1 to X1000 in decade steps.
Resolution	10 picoseconds maximum.
[1] Accuracy	E_{per} (sec) = $\pm$ TB X $P_{in} \pm \frac{1 \times 10^{-9} \pm K \pm P_{ck}}{M}$ E_{per} (%) = 100% $\left[\pm TB + \frac{\pm 1 \times 10^{-9} \pm K \pm P_{ck}}{P_{in} \times M}\right]$
Time Interval Mode	
Range	6 nanoseconds to 10^5 seconds with averaging times of X1 to X1000.
Resolution	0.1 nanosecond usable.
[1] Accuracy (nominal)	E_{TI} (sec) = TB X $P_{in} \pm (P_{ck}/\sqrt{M}) \pm 10^{-9} \pm K$ E_{TI} (%) = 100% $\pm TB \pm \frac{(P_{ck}/\sqrt{M}) \pm 10^{-9} \pm K}{P_{in}}$ The complete expression for Time Interval averaging depends on signal to noise ratio and statistical distribution factors.

[1] **Refer to Figs. 1-2 through 1-7 at the rear of this section for additional accuracy information.**

TABLE 1-1 (cont)

Characteristics	Performance Requirement
Frequency Ratio CH B/EXT clock Range	10^{-7} to 10^{4}
Totalize, CH B: Range	0 to 10^{8} counts (Manual ON—OFF control or electrical control from CH A.)
Manual Stop Watch Range	0 to 10^{5} seconds

NOTE

Formulas given where TB (dec %) is the time base accuracy; P_{in} is the period or time interval of the unknown signal (whichever is applicable); M is the number of averages taken; P_{ck} is the measurement clock period; T is the gate time; F_{in} is the frequency of the unknown signal; E_{npk} is equal to the peak noise amplitude at the input to the counter gate circuit; dv/dt is the signal slope at the input to the gate; K is equal to $2E_{npk}/dv/dt$.

Characteristics	Performance Requirements	Supplemental Information
INPUT SIGNALS CH A & B Frequency Range (CH B only) DC Coupled	DC to 225 megahertz	
AC Coupled	5 hertz to 225 megahertz	
Sensitivity CH A & B Inputs	100 millivolts peak-to-peak	
TRIG SOURCE	0.5 divisions of vertical deflection derated at higher frequencies.	
Input Resistance and Capacitance	Approximately 1 megohm, 22 picofarads	
Minimum Pulse Width	5 nanoseconds	
Minimum gate "OFF" time Between Samples During TIM Averaging Operation	10 nanoseconds	
Maximum Input Voltage	200 volts DC linearly derated to 20 volts at 200 megahertz	E max = 20 + 180 (1 – F_{in}(MHz)/200

@

TABLE 1-1 (cont)

Characteristics	Performance Requirements	Supplemental Information
Minimum Signal Period in "PER" Mode	10 nanoseconds	
Minimum CH A Input Pulse Width in "FREQ B-CH A Gate" Mode		10 nanoseconds
Triggering		
Preset Position	Automatically triggers at 0 volts	
Level Control		
Range: (CH A and CH B)	.1 V, ±500 millivolts; 1 V, ±5 volts; 10 V, ±50 volts	
Range: TRIG SOURCE	Approximately ±2.5 divisions	
Arming Inputs		
Input R and C	Approximately 10 kilohm, 20 picofarads	
Lead Time for Pulse to become effective	5 nanoseconds	
Lead Time to Negate effect of "ARM"	5 nanoseconds	
Minimum rise and fall rate	dv/dt $\geqslant$ 10 Volts per microsecond	
Sensitivity A ARM	A logical "1" occurs with either no signal applied or with +0.5 volt or greater. A logical "0" occurs with less than +0.2 volt @ I sink $\leqslant$ 0.2 milliampere	
B ARM	Logic "1" $\leqslant$ 0.2 volt or no signal applied Logic "0" $\geqslant$ +0.5 volt	
Maximum Operating Voltage	+10 volts to −5 volts	
Maximum Input Voltage	±15 volts	
External Clock In		
Input Requirements	Internal switch selectable	
Minimum Amplitude	0.8 volt peak-to-peak sine wave or pulse with 30% to 70% duty cycle	
Coupling	AC	

TABLE 1-1 (cont)

Characteristics	Performance Requirements	Supplemental Information
Maximum Input Voltage	±50 volts DC, 20 volts peak-to-peak	
Frequency Range	1 megahertz ±5%; Phase Lock Operational. 10 nanoseconds, 100 nanoseconds clock available. 20 hertz to 5 megahertz; Phase Lock Nonoperational.	
RESET–Front Panel	Reset initializes the instrument. All counters are affected, including averaging circuits.	
Input R and C	Approximately 10 kilohms, 30 picofarads	
Input Requirements		
Amplitude	Logic "1" + 2 volts or greater Logic "0" + 0.5 volt or less	
Pulse Width	⩾ 500 nanoseconds	
Maximum Operating Input Voltage	+10 volts to −10 volts	
Rise and Falltime	100 nanoseconds or less	
Maximum Input Voltage	± 15 volts	
Reset (located on Rear Interface B13)		Negative-going transition TTL compatible pulse
Rise and Falltime		⩽ 100 nanoseconds
Width		⩾ 500 nanoseconds
Hold Signal (located on Rear Interface B22)		TTL compatible, negative-logic signal
Rise and Falltime		⩽ 200 nanoseconds
Propagation Delay for Signal to become effective or ineffective		⩽ 100 nanoseconds

TABLE 1-1 (cont)

Characteristics	Performance Requirements	Supplemental Information
INTERNAL TIME BASE		
Crystal Oscillator		
Frequency		5 megahertz
Accuracy		
0°C to +50°C	Within 0.5 part per million	
Long Term Drift	1 part or less in 10^7 per month	
OUTPUT SIGNALS		
Monitor Signals		
Clock Out	Logic "1" = +0.5 volt ±10% into 50 ohms Logic "0" ⩽ 0 volt into 50 ohms. TTL compatible without 50 ohm load (1.6 milliamper current capacity)	Z_{out} 430 ohms
A and B Trigger Level	$Z_{out} \approx$ 1 kilohm V_{out} = ±0.5 volt into 1 megohm	
Externally Programable with ±5 volt Signal maximum and in the Preset Position	(10X scaling)	
Analog Display (Internally Connected)	Front panel switch selects either "True Gate" signal, "Pseudo Gate", or "Channel "B" out	The Pseudo Gate signal is a high-speed representation of the 7D15 gate signal
Position	Controlled by front panel screwdriver control	
Amplitude	1.0 division. Can be set from 0.2 to 1 div ±20%.	Changed by resistor alteration
Rise and Falltime	Less than 2 nanoseconds	
Propagation delay: Input BNC's to plug-in interface		True Gate: ≈ 20 nanoseconds Pseudo Gate: ≈ 18 nanoseconds CH B: ≈ 16 nanoseconds

TABLE 1-1 (cont)

Characteristics	Performance Requirements	Supplemental Information
Displayed gate width to "effective" gate width		Matches to within 1 nanosecond; depends on correct calibration of horizontal time base used
In "Freq" or "events": operation, lead time required of gate display over CH B display to guarantee proper accumulation or non-accumulation of count.		⩾ 1 nanosecond
External Display	Located on front panel, same as "analog display" except position and amplitude controls have no effect	
Amplitude	Logic "1" = +0.5 volt ±10% into 50 ohms. Logic "0" ⩽ 0 volt into 50 ohm TTL compatible without 50 ohm load (1.6 milliamper current capability)	
Rise and Falltime	⩾ 1.5 nanoseconds with 50 ohm load	
Propagation delay from input BNC's to display		True Gate: ≈ 21 nanoseconds Pseudo Gate: ≈19 nanoseconds CH B ≈ 17 nanoseconds
"True Gate" & "Pseudo Gate" output pulse width to "Effective Gate"		Matches to within 1 nanosecond
Busy Signal (located on Rear Interface A22)		Nominally TTL compatibility, positive logic
Rise and Falltime		100 nanoseconds maximum
Delay After Reset Command		150 nanoseconds maximum
DISPLAYS Gate Indicator		A LED lamp indicates internal gate condition
Display Mode Switch	Front panel switch allows selection of readout "follow or store"	
Display Time Control		Continuously variable from 0.1 second or less to approximately 5 seconds. With control in maximum clockwise position, the display is held indefinitely

@

TABLE 1-1 (cont)

Characteristics	Performance Requirements	Supplemental Information
Readout	8 digits of display, the four most significant digits have zero suppression. Overflow by ">" arrow. Legend located on Channel 2 of readout system	
Resolution, Minimum		
Frequency	0.1 hertz	
Per, TIM	10 nanoseconds	
Multi-per	10 picoseconds	
Multi-TIM	100 picoseconds (limited)	

TABLE 1-2

ENVIRONMENTAL CHARACTERISTICS

Refer to the specification for the associated oscilloscope.

TABLE 1-3

PHYSICAL CHARACTERISTICS

Size	Fits all 7000-Series plug-in compartments.
Weight	3.1 Pounds (1.4 kilograms)

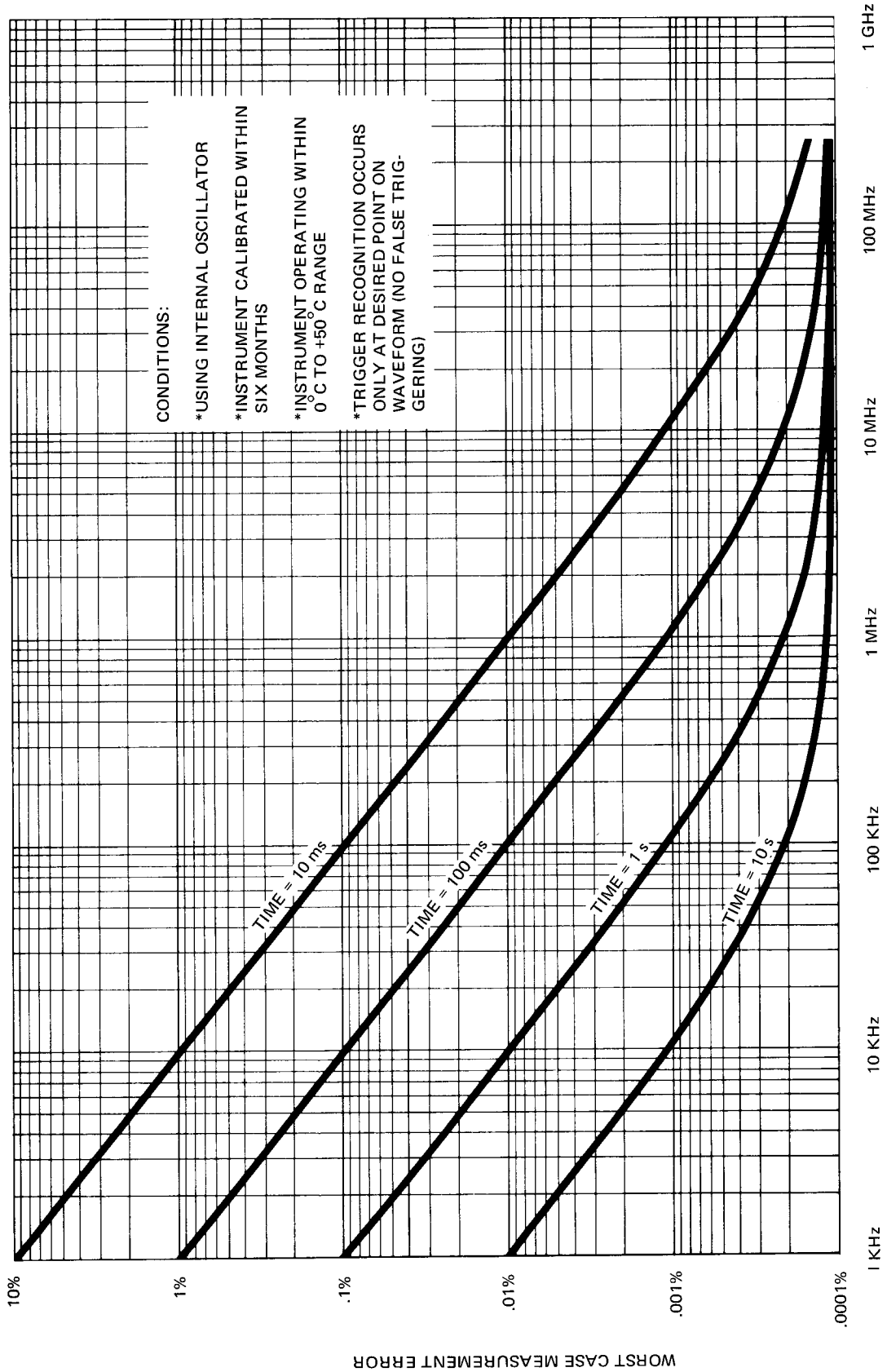

Fig. 1-2. 7D15 Frequency mode accuracy stated in percent.

@

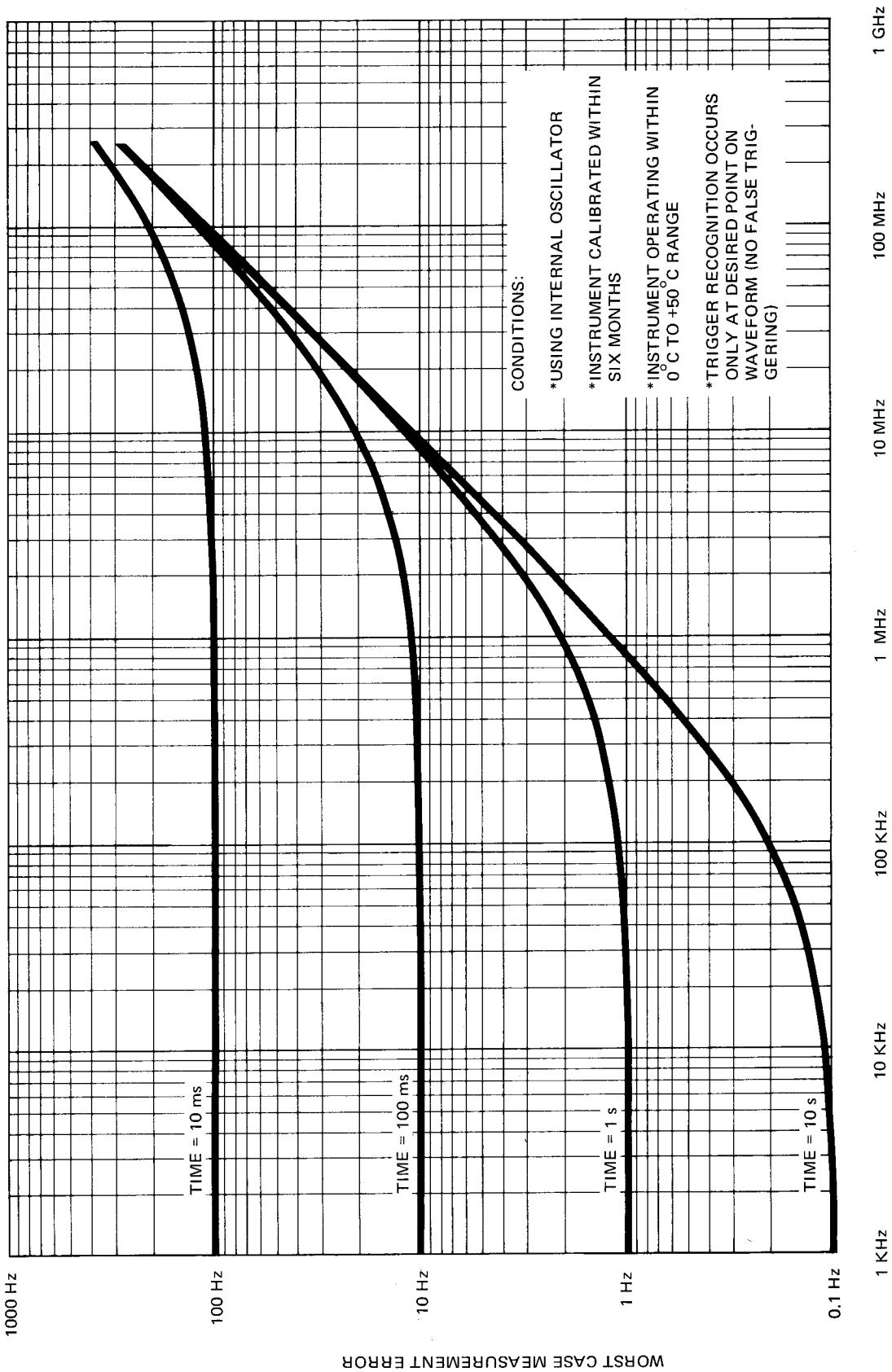

1432-3

Fig. 1-3. 7D15 Frequency mode accuracy stated in hertz.

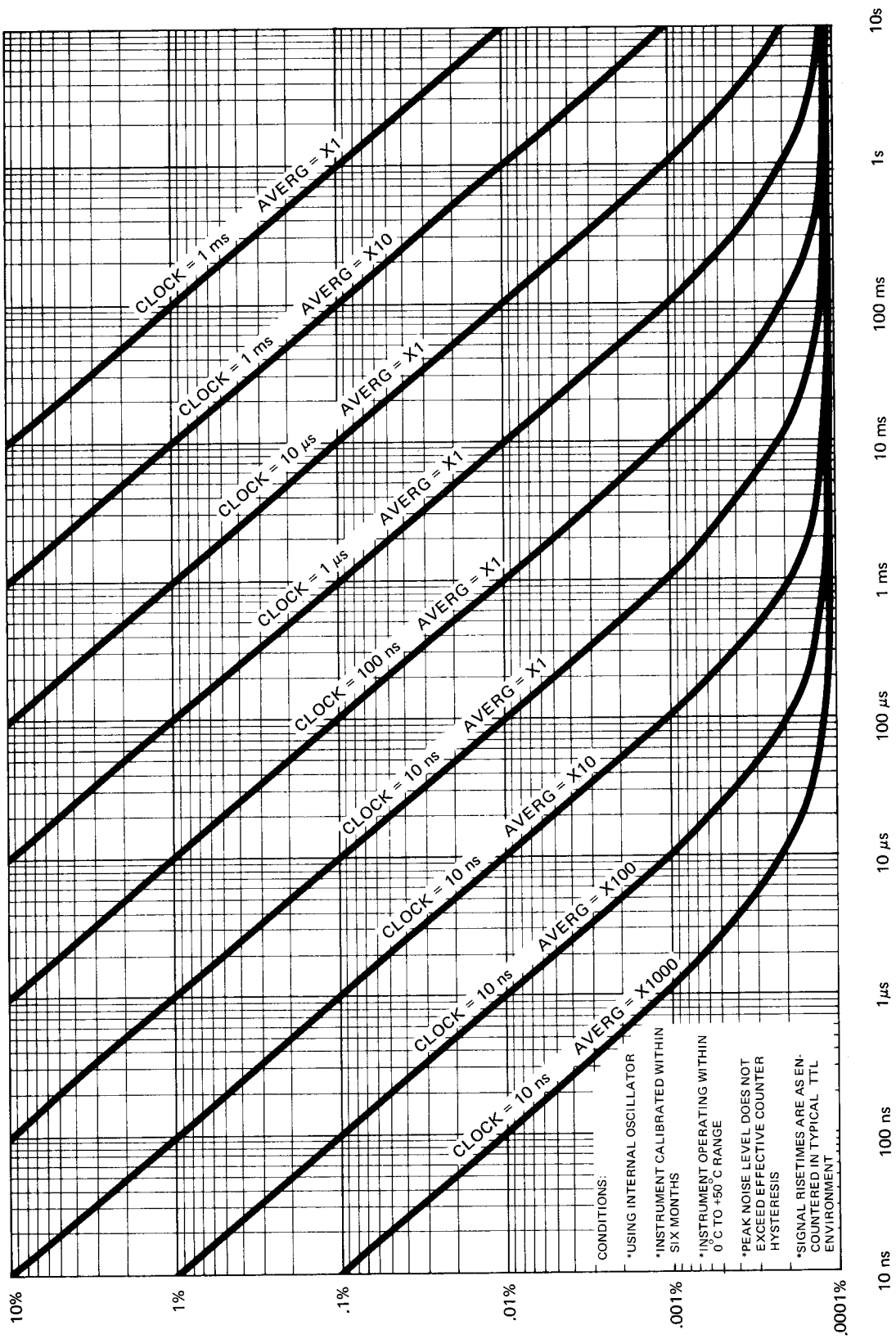

Fig. 1-4. 7D15 Period mode accuracy stated in percent.

1432-4

@

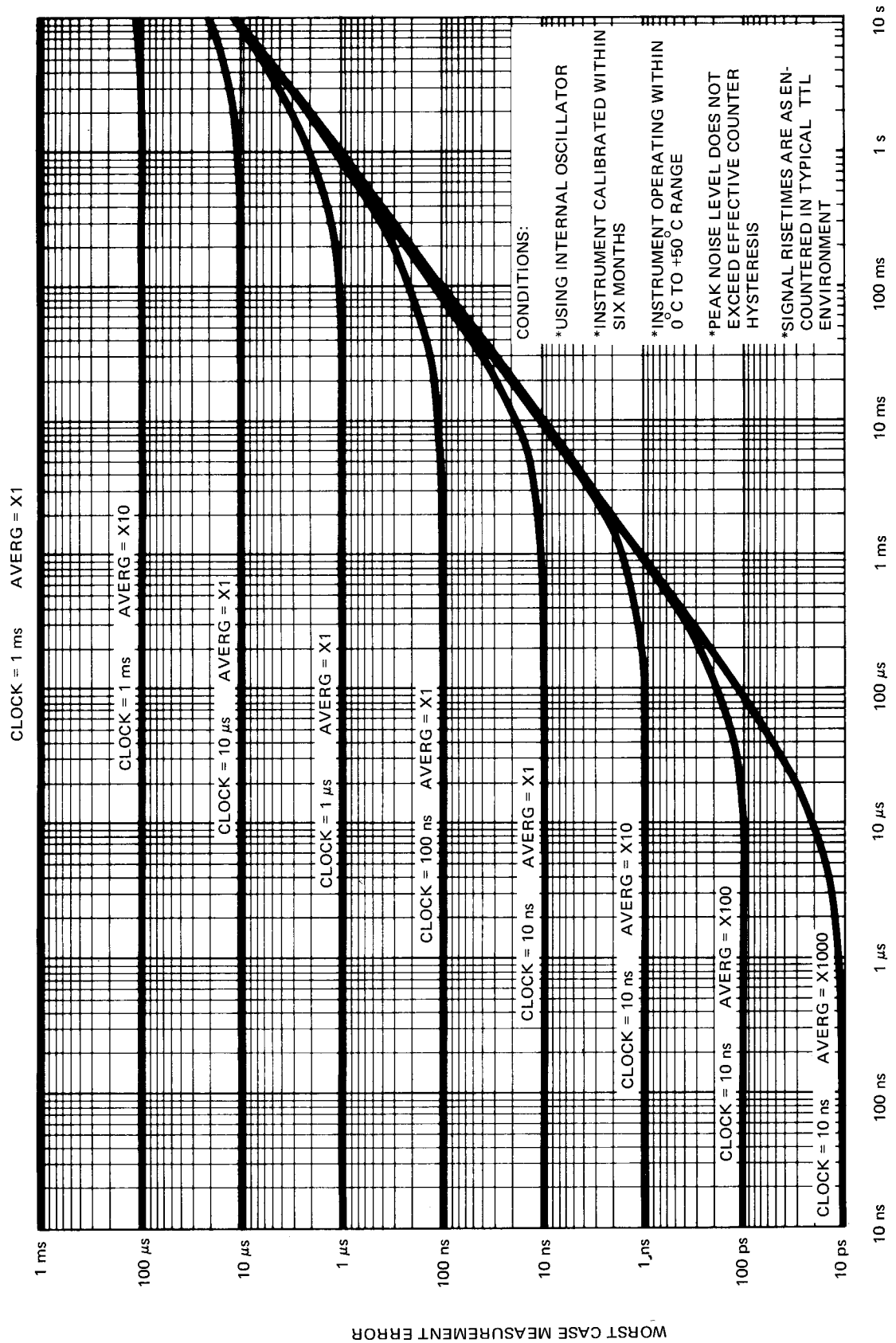

1432-5

Fig. 1-5. 7D15 Period mode accuracy stated in time.

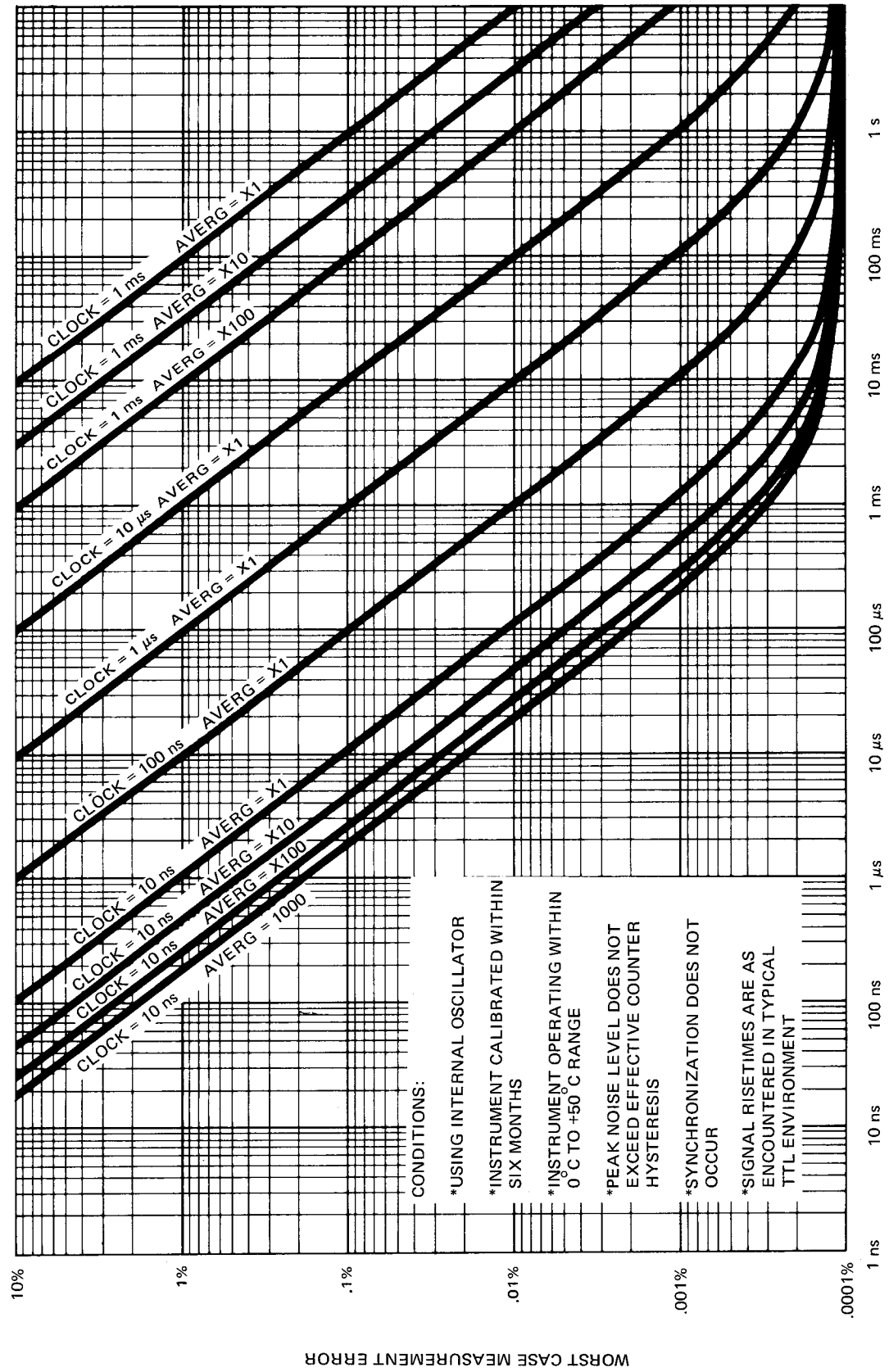

1432-6

Fig. 1-6. 7D15 Time Interval mode accuracy stated in present.

@

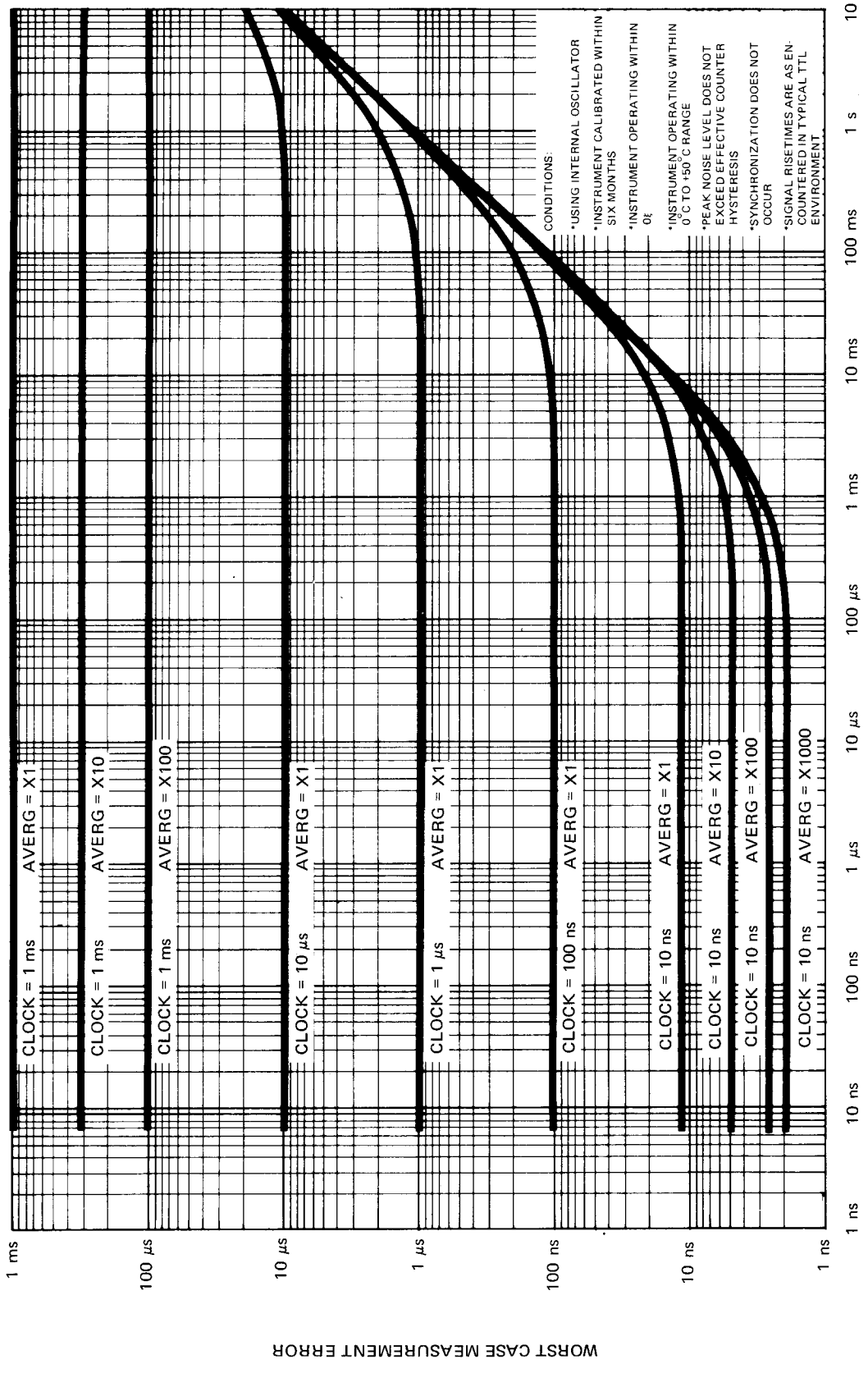

Fig. 1-7. 7D15 Time Interval mode accuracy stated in time.

1432-7

OPERATING INSTRUCTIONS

GENERAL

The 7D15 Universal Counter/Timer plug-in unit operates with the readout system of Tektronix 7000-series Oscilloscopes to measure frequency or frequency ratio, and to totalize (count number of events).

To effectively use the 7D15, the operation and capabilities of the instrument must be known. This section describes front-panel control functions and general information on signal input connections.

Installation

The 7D15 is calibrated and ready for use as received. It can be installed in any compartment of Tektronix 7000-Series Oscilloscopes; however, if a displayed waveform is desired, it should be used in one of the vertical compartments. Mainframe triggers are furnished the 7D15 when installed in a horizontal compartment.

To install, align the upper and lower rails of the 7D15 with the oscilloscope tracks and slide it in. The front panel will be flush with the front of the oscilloscope and the latch at the bottom left corner will be in place against the front panel when the 7D15 is fully installed. To remove, pull on the latch (inscribed with the unit identification "7D15") and the 7D15 will unlatch. Continue pulling to slide the 7D15 out of the oscilloscope.

FRONT PANEL CONTROLS AND CONNECTORS

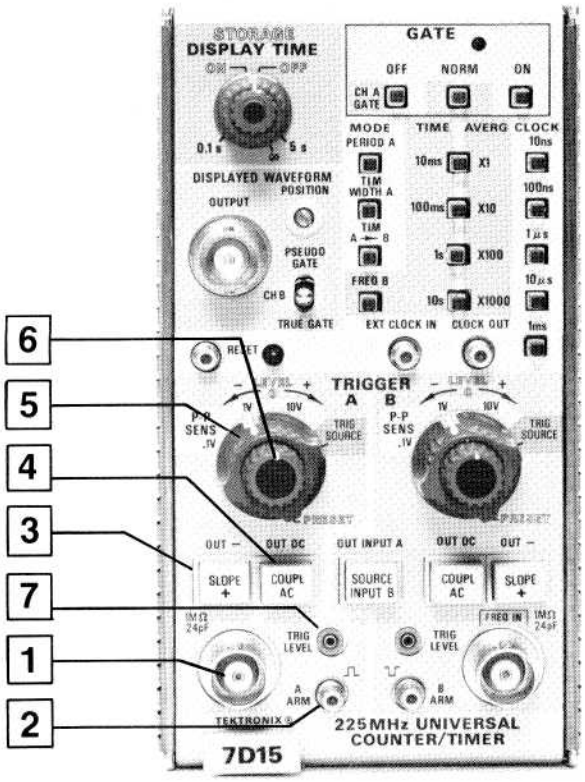

A TRIGGER

1 A Input Connector: When selected, provides a means for connecting the trigger signal.

2 A ARM Jack: Gates the A Input. A logical Lo gates the A Input off and a logical Hi gates the A Input on.

3 SLOPE Switch: Selects whether the positive- or negative-going slope of the signal is to be used as a trigger. The inward position of the SLOPE switch selects the positive slope and the outward position of the SLOPE switch selects the negative slope.

4 COUPL Switch: Selects the input coupling to be used. The outward position of the COUPL switch connects both the DC and AC component of the A Input to the attenuator. The inward position allows only frequencies above approximately 5 Hz to pass.

5 P-P SENS
.1V, 1V, 10V Positions: Selects the sensitivity of channel A trigger amplifier.
TRIG SOURCE Position: Selects the internal vertical amplifier trigger signal when installed in the horizontal compartment.

6 LEVEL Control: Controls the DC trigger level of the channel A trigger amplifier. The PRESET position (LEVEL control fully clockwise) sets the DC trigger level to 0 volts.

7 TRIG LEVEL Jack: May be used to monitor the DC trigger level or, when the P-P SENS switch is in the TRIG SOURCE position, the TRIG LEVEL jack can be used to externally set the DC trigger level.

1432-8

Figure 2-1

FRONT PANEL CONTROLS AND CONNECTORS

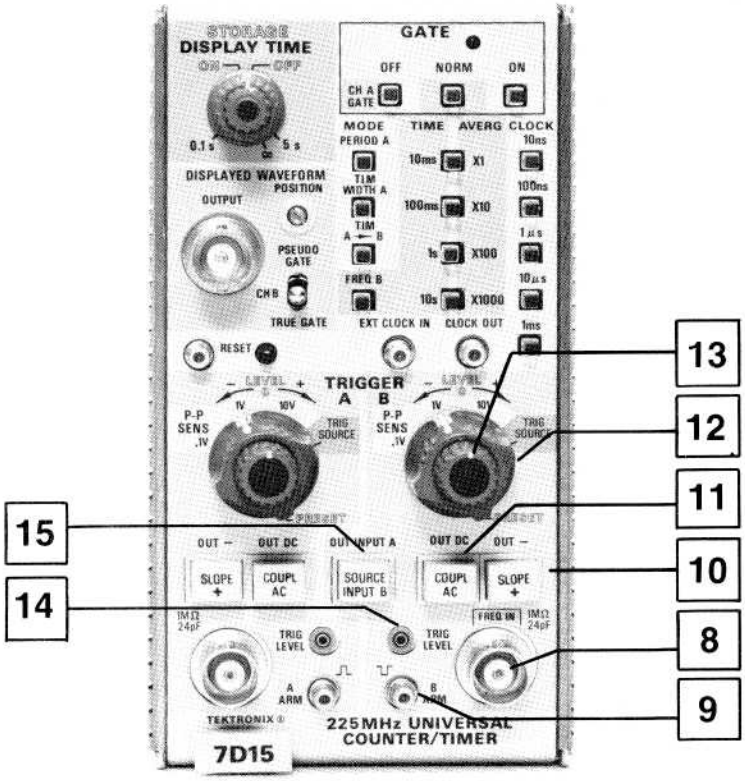

B TRIGGER

8 B Input Connector: When selected, provides a means for connecting the trigger signal.

9 B ARM Jack: Gates the B Input. A logical Hi gates the B Input off and a logical Lo gates the A Input on.

10 SLOPE Switch: Selects whether the positive- or negative-going slope of the signal is to be used as a trigger. The inward position of the SLOPE switch selects the positive slope and the outward position of the SLOPE switch selects the negative slope.

11 COUPL Switch: Selects the input coupling to be used. The outward position of the COUPL switch connects both the DC and AC component of the B Input to the attenuator. The inward position allows only frequencies above approximately 5 Hz to pass.

12 P-P SENS
.1 V, 1 V, 10 V Positions: Select the sensitivity of channel B trigger amplifier.
TRIG SOURCE Position: Selects the internal vertical amplifier trigger signal when installed in a horizontal compartment.

13 LEVEL Control: Controls the DC level of the channel B trigger amplifier. The PRESET Position (LEVEL control fully clockwise) sets the DC trigger level to 0 volts.

14 TRIG LEVEL Jack: May be used to monitor the DC trigger level or, when the P-P SENS switch is in the TRIG SOURCE position, the TRIG LEVEL jack can be used to externally set the DC trigger level.

15 SOURCE Switch: The outward position of the SOURCE pushbutton switch internally connects the signal at A Input to both A trigger amplifier and B trigger amplifier. The inward position of the SOURCE switch connects the B Input to the B trigger amplifier. The A Input remains connected to the A trigger amplifier. 1432-9

Figure 2-2

FRONT PANEL CONTROLS AND CONNECTORS

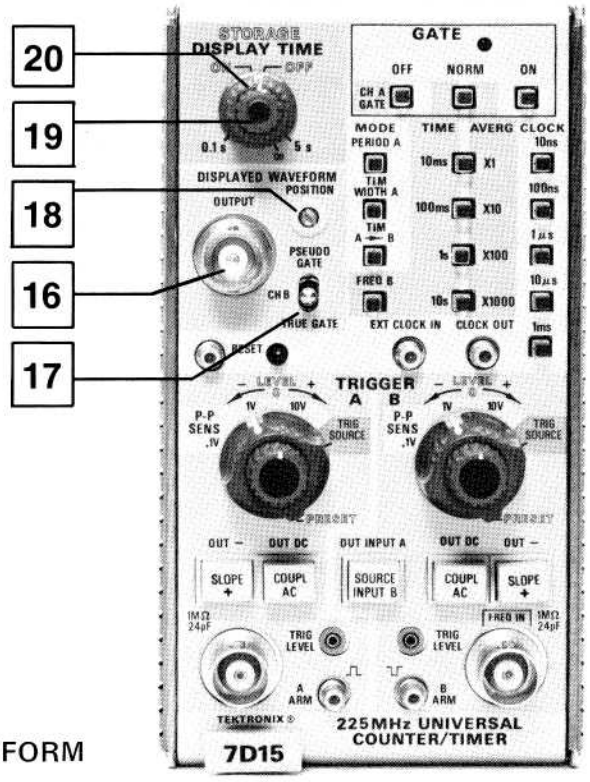

DISPLAYED WAVEFORM

16 OUTPUT Connector: Provides an output for monitoring the PSEUDO GATE, CH B signal or, TRUE GATE.

17 Displayed Waveform Selector.
TRUE GATE: The main gate waveform. The repetition rate of the TRUE GATE is a function of the DISPLAY TIME setting.
CH B: The conditioned signal derived from the output of the channel B shaper circuit.
PSEUDO GATE: A high repetition-rate replica of the TRUE GATE.

NOTE

These signals may be displayed on the CRT when the 7D15 is used in a mainframe vertical compartment.

18 POSITION Screwdriver Control: Sets the position of the signal displayed on the CRT.

STORAGE and DISPLAY TIME

19 STORAGE Switch
ON: The 7D15 stores the digital display of the previous measurement until the end of the next measurement and then updates the display.
OFF: The 7D15 provides a continuous display during the counting process.

20 DISPLAY Control: The display time variable control holds the displayed digital reading for a period of 0.1 s to 5 s. In the fully clockwise position (∞), the display is held indefinitely.

1432-10

Figure 2-3

@

FRONT PANEL CONTROLS AND CONNECTORS

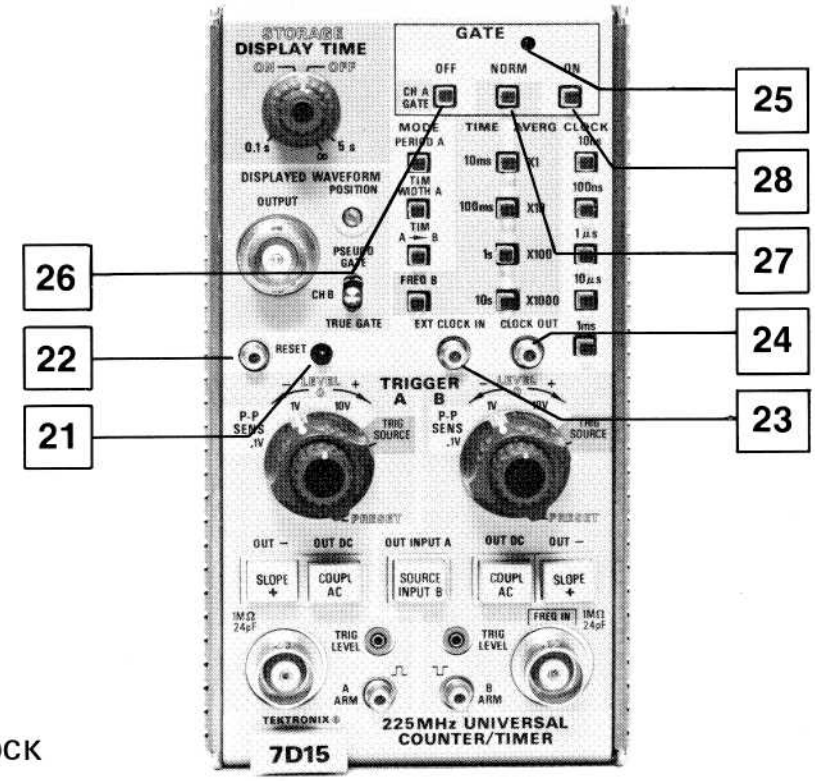

RESET and CLOCK

21 RESET Pushbutton: The momentary pushbotton switch initializes the instrument. All counters are affected including the averaging circuits.

22 RESET Connector: Provides a means for remotely resetting the 7D15. A logical Hi causes the 7D15 to initialize.

23 EXT CLOCK IN Connector: Provides a means for connecting an external clock (an "in-house" standard) or to obtain a different measurement interval for FREQ measurements. To apply an external clock, an internal slide switch (located on the right side of the 7D15) must be switched to the Ext. position (towards the rear).

24 CLOCK OUT Connector: Provides a means for monitoring the internal oscillator as selected by the CLOCK pushbuttons.

GATE

25 LIGHT: The light indicates the state of the main gate. When lit, the main gate is on (7D15 is in the process of making a measurement). When the light is extinguished the main gate is off.

26 OFF Pushbutton: With this button depressed, the 7D15 main gate is held off. When the MODE switch is in the FREQ position, however, the A Input is used to turn the main gate on and off.

27 NORM Pushbutton: When this button is depressed, the MODE switches control the main gate in the normal manner.

28 ON Pushbutton: When this button is depressed, the 7D15 main gate is held on. When in the PERIOD A, TIM WIDTH, or TIM A B Mode; the 7D15 counts at the rate selected by the CLOCK switch. When in the FREQ mode, the 7D15 counts events present at the B Input connector.

1432-11

Figure 2-4

FRONT PANEL CONTROLS AND CONNECTORS

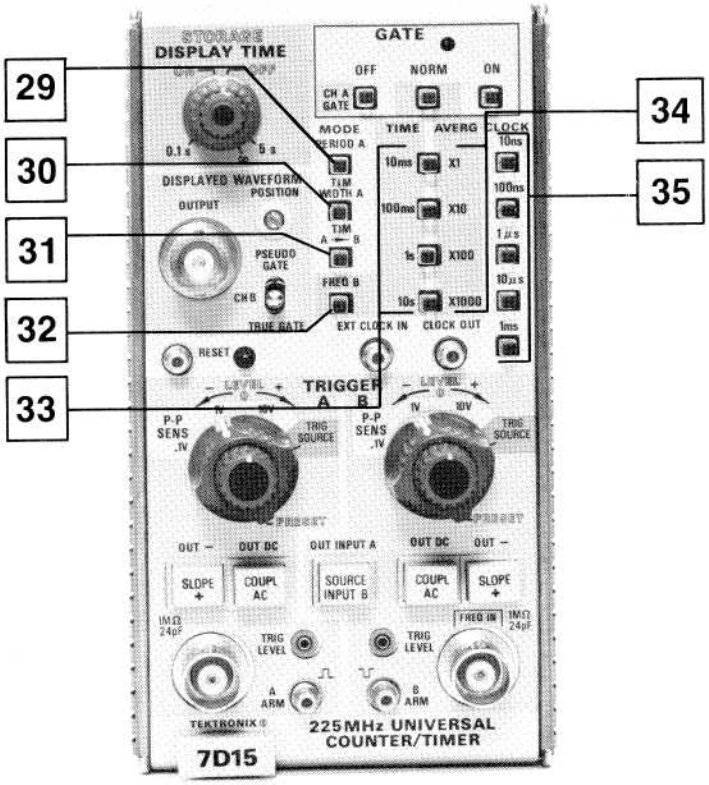

MODE

29 PERIOD A: The 7D15 triggers on the slope and level selected by the A TRIGGER section to measure periods of 10 ns to 10^5 s.

30 TIM WIDTH A: The 7D15 starts on the slope and level selected by the A TRIGGER section and stops at nearly the same level, but the other slope. The B TRIGGER section does not function in this mode.

31 TIM A B: The 7D15 starts on the slope and level selected by the A TRIGGER section and stops on the slope and level selected by the B TRIGGER section. Two completely separate signals may be used, or for a single signal source, use the A Input and the SOURCE switch.

32 FREQ B: The 7D15 measures frequency directly from DC to 225 MHz. Signal connection is made via the B Input connector.

TIME – AVERAGE

33 10 ms, 100 ms, 1 s, 10 s Pushbuttons: These switch positions are used in conjunction with the FREQ mode to select the measurement interval.

34 X1, X10, X100, X1000 Pushbuttons: These switch positions are used in conjunction with the PERIOD A, TIM WIDTH A, and TIM A B modes to select the number of measurements to be averaged.

CLOCK

35 10 ns, 100 ns, 1 μs, 10 μs, 1 ms Pushbuttons: Selects the clock rates to be used.

1432-12

Figure 2-5

MODES OF OPERATION

Manual Stop Watch

This mode uses the GATE ON OFF switches to manually turn the counter main gate on and off. The counting rate is determined by the CLOCK switches. Times of up to 10^5 s can be measured in this mode.

Event Counter

In the EVENTS mode, the 7D15 counters accept information from the B Input connector. The B TRIGGER controls select the counter triggering point. From 1 to 10^8 events can be counted in this mode.

Frequency Measurements

The 7D15 can measure frequencies directly from dc to 225 MHz when used in the FREQ mode. To obtain greater resolution of low-frequency measurements, measure the period of the waveform and calculate frequency (Frequency = 1/Period).

Frequency Ratio Measurements

The ratio of one signal to another can be compared with a range of up to 10^4:1 and, depending on the range, a resolution of up to 10^{-7}. In the Frequency Ratio mode, the "standard" or reference signal is usually connected to the EXT CLOCK IN and the signal to be compared is connected to the B Input connector.

Time Interval Measurements (TIM)

Two basic modes of time interval measurements can be selected, TIM WIDTH, and TIM A→B. The TIM WIDTH mode measures the time between two points on a waveform. These points are selected by the A TRIGGER controls such that the counter main gate turns on at the point on the waveform selected by the A SLOPE and LEVEL controls and turns off at the same level but on the other slope. See Fig. 2-7c.

The TIM A→B mode, like the TIM WIDTH mode, measures the time between two points on a waveform. These two points are controlled individually, such that the A TRIGGER controls select the point on the waveform that turns the main gate on, and the B TRIGGER controls select the point on the waveform that turns the main gate off. See Fig. 2-7d.

Period Measurements and Period Averaging

The 7D15 measures periods from 10 ns to 10^5 s. Up to 1000 periods can be averaged to obtain a resolution of up to 10 ps.

The period mode measures the time between two points on a waveform. These two points are selected by the A TRIGGER controls such that the counter main gate turns on and off at the point selected by the level and slope controls, see Fig. 2-7a. The period averaging mode holds the

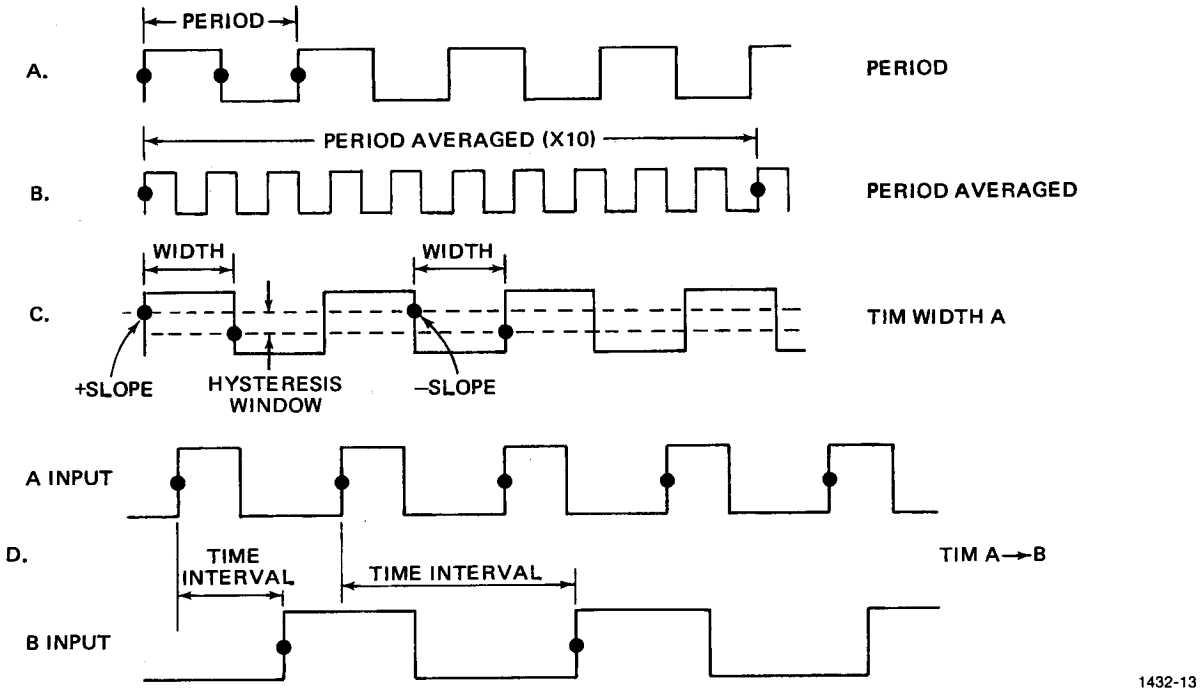

Fig. 2-6. Measurement intervals.

counter main gate on until 1, 10, 100 or 1000 periods are counted (see Fig. 2-7b).

Time Interval Averaging

Averaging makes possible time interval measurement as short as six nanoseconds with a usable resolution up to 0.1 nanosecond. This increased resolution is achieved by statistically reducing the ±1 count error inherent in single shot time interval measurements. The probability of obtaining the true value increases with the number of intervals averaged.

Time interval averaging can be used whenever several repetitive intervals are available. The number of averages selected (10, 100, or 1000) is largely determined by the number of intervals available. Overflowing the counter registers is another consideration for selecting the number of averages.

Time interval averaging should not be used when the interval being measured might vary during the measurement cycle (a non-repetitive signal), or when signal repetition rate is synchronized with the counter clock rate. The problems of synchronization are discussed later.

Unlike period averaging (which turns the counter main gate on for a certain length of time), time interval averaging makes a predetermined number of discrete measurements, then averages these measurements to obtain the final answer. For instance, for 1000 averages, the counter main gate is turned on and off 1000 times before the final answer is ready.

With a ten nanosecond clock, it is possible to obtain accuracies of one nanosecond. For example, assume that the time interval to be measured is 11 nanoseconds. The measurement is made and the results are totaled 1000 times. In this case, a ten nanosecond clock is used. 1.1 pulses of the clock will occur during the measurement interval, so 1100 counts would be expected to occur during 1000 measurements. Since the counter cannot record a fractional count, sometimes it registers one count and sometimes two counts, depending on the timing between the clock and the repetition rate of the interval to be measured. Assuming a uniform random distribution of timing coincidence, two counts are recorded 10% of the time and one count 90% of the time. Figure 2-8 shows the graphical representation of this example.

While time interval averaging reduces inaccuracies, the amount is often difficult to determine. The period of the interval to be measured is one variable in calculating the

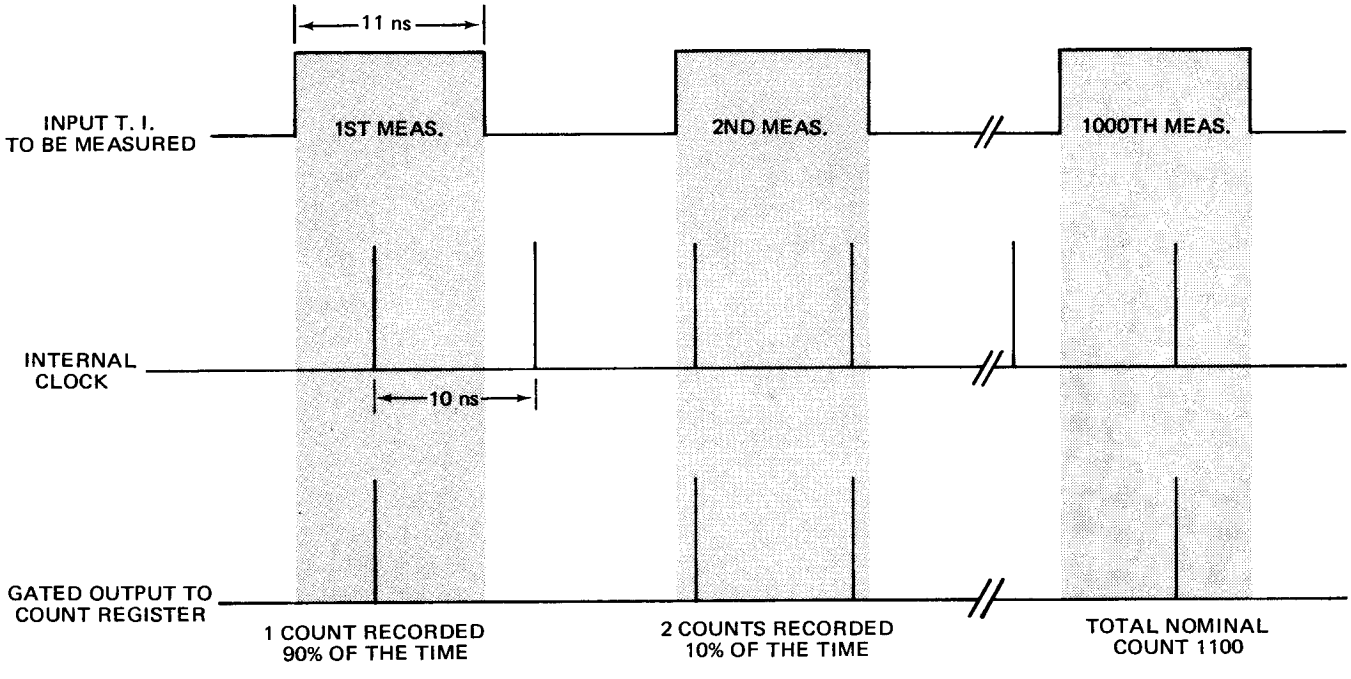

Fig. 2-7. Graphical representation of time interval averaging.

standard deviation. A probability distribution graph for the previous example, where the time interval is 11 ns, is shown in Figure 2-9. Compare this graph with the probability distribution graphs for 10.1 ns and 15 ns. The probability range for a time interval of 10.1 ns is narrower than for a time interval of 11 ns or 15 ns. Readings in the shaded area of the graph represent the range of answers that may be given 50% of the time.

Another variable that can change the shape of the distribution curve is the number of averages taken. The graphs shown in Figure 2-10 represent the probability curve of an 11 ns time interval that is averaged 10, 100, and 1000 times. The graphs show that the probability of obtaining an answer of exactly 11 ns increases with the number of averages taken.

It should be noted that the previous examples assume a uniform random distribution of time coincidence. If the input time interval and clock is synchronized an erroneous answer may be given; see Figure 2-11. The answer does not vary, but is wrong. Anything short of pure synchronization is usually acceptable.

If synchronization is suspected, a check can be made by comparing the repetition rate of the time interval to be measured with the 7D15 clock rate. This can be done by triggering the oscilloscope with the 7D15 PSEUDO GATE and observing the CLOCK OUT signal. Since all the 7D15 Clock positions are synchronized with each other, for the purpose of display, a lower clock rate position can be used. Synchronization is indicated by a display with little or no drift.

The amount of acceptable drift can be determined first, by calculating the time needed to make a time interval average measurement (T_{meas}) by the following:

$$T_{meas} = \frac{\text{Number of averages}}{\text{Repetition rate of measured time interval}}$$

Second, observe the waveform and measure the time of one cycle of drift. Correct for the time interval actually used.

Generally, synchronization will not occur if this figure is less than T_{meas}.

Example: A time interval with a repetition rate of 100 kHz is being measured and averaged 1000 times, using a clock of 10 ns.

$$T_{meas} = \frac{1000}{100\ kHz} = 10\ ms$$

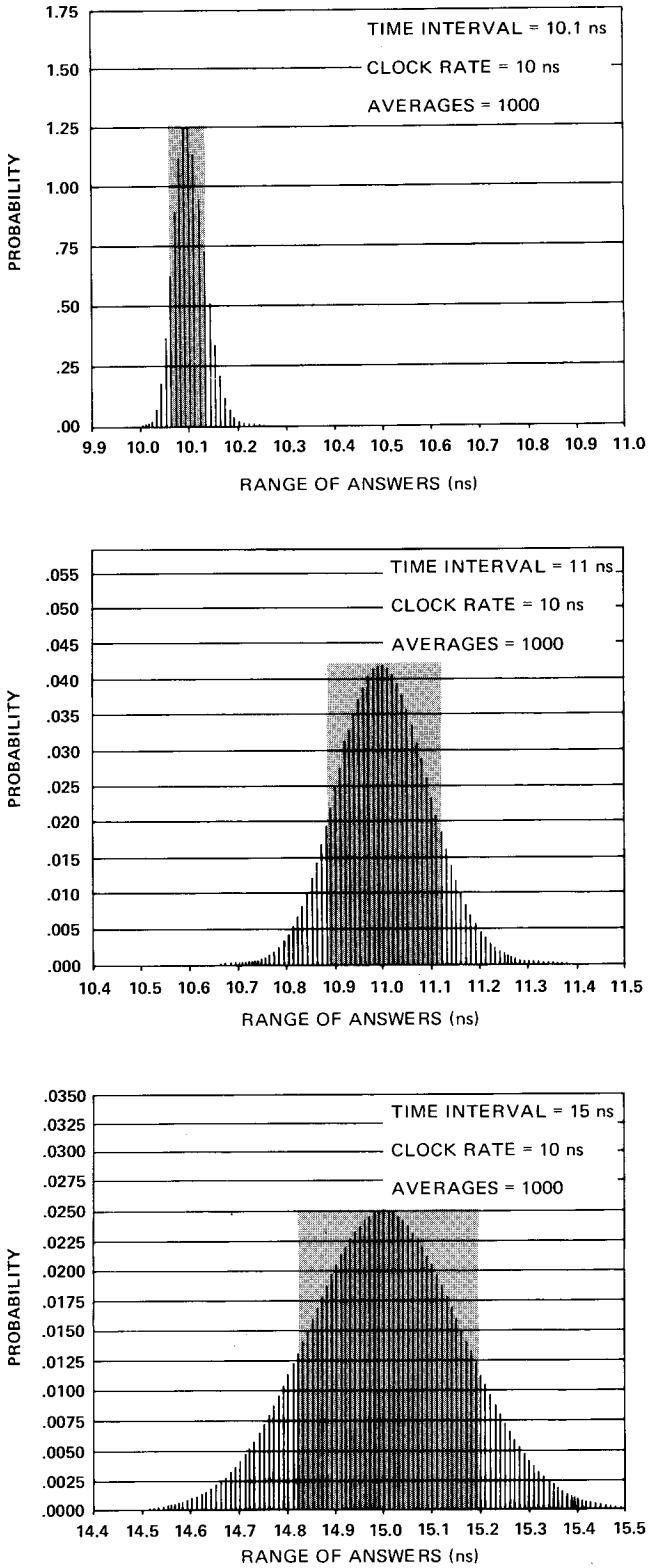

THE ABOVE EXAMPLES ASSUME A UNIFORMLY RANDOM DISTRIBUTION OF TIMING COINCIDENCE. 1432-15

Fig. 2-8. Probability versus time interval.

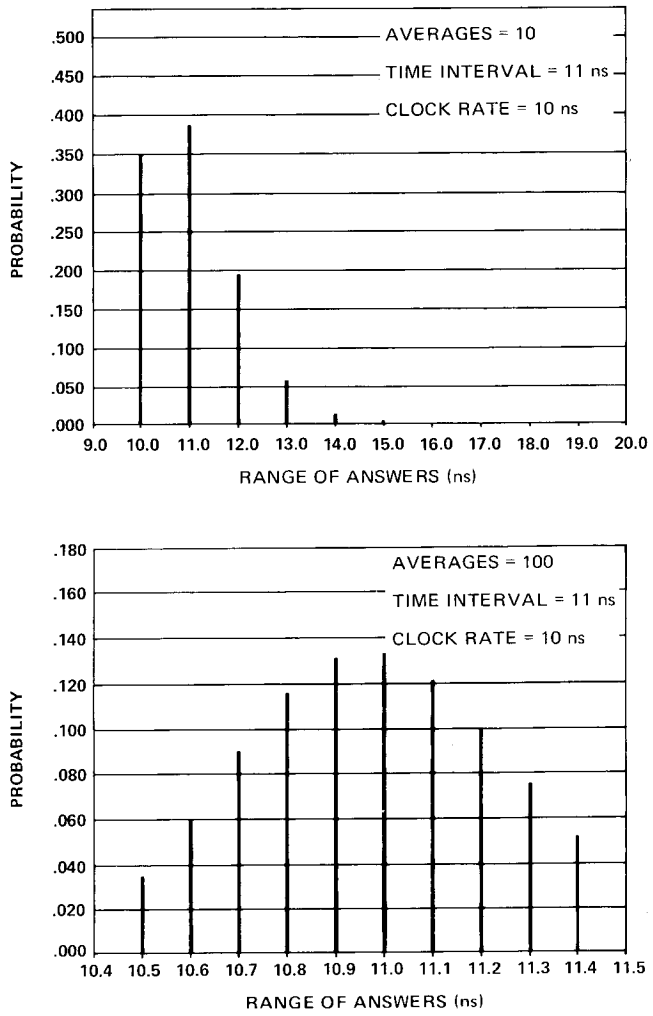

THE ABOVE EXAMPLES ASSUME A UNIFORMLY RANDOM DISTRIBUTION OF TIMING COINCIDENCE.

1432-16

Fig. 2-9. Probability versus number of averages.

The CLOCK OUT signal is viewed on the oscilloscope, using an amplifier plug-in unit. The display is triggered with the PSEUDO GATE. To present a usable display, the 7D15 clock rate is changed to 10 μs. A drift of 1.5 seconds per cycle is noted. This drift rate is corrected by:

$$\frac{10\text{ ns}}{10\ \mu\text{s}} \quad X \quad 1.5\text{ seconds} \quad = \quad 1.5\text{ ms}$$

Since T_{meas} (10 ms) is greater than the drift rate (1.5 ms), synchronization is not a problem.

To eliminate a synchronous relationship, change the input signal repetition rate, introduce some type of phase instability to the input signal, or alter the 7D15 clock frequency (two or three ppm is usually adequate). Any of these methods allow the counter to seek a true random distribution of time coincidence.

Selective Time Interval Measurements

Selective time interval measurements are made possible by using the 7D15 A ARM and B ARM gates. The oscilloscope delayed gate can be used in conjunction with the ARM gates to choose the portion of a waveform to be measured. Refer to the oscilloscope and time base manuals for complete information concerning gate outputs available.

OPERATION AND CHECKOUT

Introduction

These procedures demonstrate the use of the connectors and controls of the 7D15, and also provide a means of checking the basic operation of the instrument.

Preliminary Setup

Install the 7D15 into a vertical compartment of any 7000-Series, readout-equipped, oscilloscope. Set the oscilloscope Vertical Mode and Trigger Source switches to the proper settings.

Install a 7B-Series time-base unit into a horizontal compartment and set the oscilloscope Horizontal Mode switch to the proper setting. Adjust the time-base unit throughout the procedures to obtain an optimum triggered display.

@

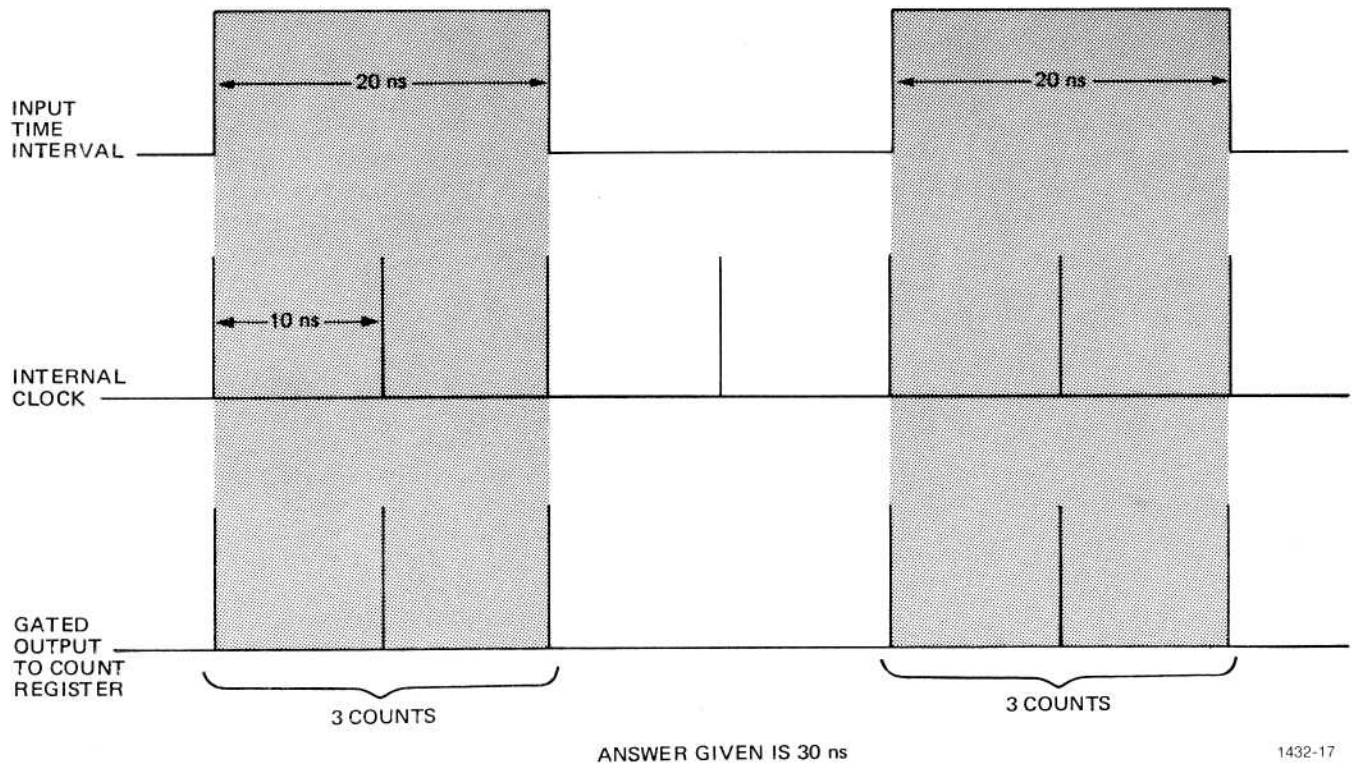

Fig. 2-10. Results of pure synchronization between the clock rate and input time interval.

Set the 7D15 controls as follows:

A and B TRIGGER

SLOPE	+
COUPL	DC
SENS	.1 V
LEVEL	PRESET
SOURCE	INPUT B

DISPLAYED WAVEFORM

Switch	PSEUDO GATE

Manual Stop Watch

1. Set the 7D15 GATE switch to OFF and set the MODE switch to PERIOD A.

2. Select the desired counting interval (a counting interval of 1 ms can be observed easily).

3. Turn the STORAGE switch to OFF and the DISPLAY control to ∞.

4. The 7D15 is ready to count. Use the GATE ON OFF switch to start and stop the counter. Push the RESET button to reset the counter.

NOTE

To obtain the total time of a number of time measurements, do not reset counter.

Event Counter

1. Set the 7D15 GATE switch to OFF and set the MODE switch to FREQ B.

2. Turn the STORAGE switch to OFF and connect the signal to be counted to the B Input connector (a 0.4 V, 1 kHz oscilloscope calibrator signal may be used to show operation).

3. Use the GATE ON OFF switch to start and stop the event counter. If necessary, adjust the B TRIGGER controls to obtain proper triggering. The DISPLAY control determines the length of time that the digital display is shown on the CRT before the counter resets.

Period Measurements

1. Set the 7D15 MODE switch to PERIOD A, the AVERG switch to X1, the GATE switch to NORM, and the CLOCK switch to the desired resolution.

2. Set the STORAGE switch to ON and the DISPLAY TIME control to the desired repetition rate.

3. Connect the signal to be measured to the A Input connector and adjust the A TRIGGER controls for proper triggering. Observe the PSEUDO GATE display on the CRT.

NOTE

The CLOCK OUT signal may be used as the A Input Signal to show operation. The period of the CLOCK OUT signal is selected by the CLOCK switch.

Period Averaging

1. Follow the procedures for Period Measurements.

2. Set the AVERG switch to the number of averages desired, i.e., with the CLOCK OUT signal connected through a 50 ohm terminator to the A Input, the CLOCK switch set to 10 ns, and the AVERG switch set to X1000, the 7D15 digital display will be "10.00 ns 1000X" ±1 count.

Frequency Measurements

1. Set the 7D15 MODE switch to FREQ, the GATE switch to NORM, and the TIME switch to the desired measurement interval.

2. Set the STORAGE switch to ON and the DISPLAY TIME switch to the desired repetition rate.

3. Connect the signal to be measured to the B Input connector and adjust the B TRIGGER controls for proper triggering.

NOTE

The CLOCK OUT signal may be used as the B Input signal to show operation. The frequency of the CLOCK OUT signal is selected by the CLOCK switch, i.e., with the CLOCK OUT signal connected to the B Input, the CLOCK switch set to 100 ns, and the TIME switch set for a 1 second measurement interval the 7D15 will read "10000.000 kHz 1000 ms".

Frequency Ratio Measurements

1. Apply one of the signals to be compared to the EXT CLOCK IN connector using one of the cables supplied with the 7D15. This signal is usually a standard to which the other signal is compared. Move the internal Clock switch toward the rear of the plug-in to the External clock position, see Fig. 2-12.

2. Set the MODE switch to FREQ and the TIME AVERG switch to X1.

3. Connect the second signal (the signal to be compared) to the B Input connector. Adjust the B TRIGGER controls for proper triggering.

4. The numerical readout located on the upper portion of the CRT indicates the ratio of the B Input signal to the EXT CLOCK IN signal.

5. To obtain greater resolution, the TIME AVERG switch can be used to divide the EXT CLOCK IN signal by 10, 100, or 1000. However, the decimal point for these switch positions will be incorrect. To obtain the correct answer, multiply the CRT readout by the correction factor given in Table 1-1. For example, the CRT reads 10000.00 and the TIME AVERG switch is set to X10. The corrected readout is 10.00000:1.

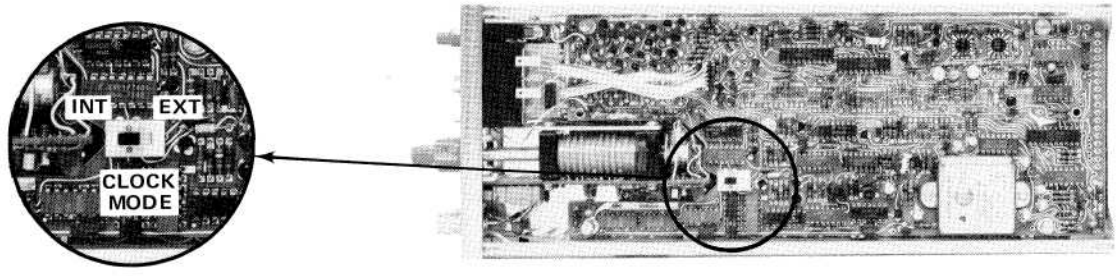

1432-18

Fig. 2-11. Internal/External clock switch.

TABLE 2-1

Frequency Ratio Decimal Point Chart

TIME AVERG Switch Position	7D15 Readout	Correction Factor	Corrected Readout
X1	0.0000	$X10^1$	0.0000 : 1
X10	00.00	$X10^3$	000.00 : 1
X100	0.000	$X10^3$	000.000 : 1
X1000	0.0000	$X10^3$	000.0000 : 1

TIM WIDTH and TIM WIDTH Averaging Measurements

1. Set the 7D15 MODE switch to TIM WIDTH A, and the AVERG switch to the desired number of measurements to be averaged. Set the GATE switch to NORM and the CLOCK switch to the desired resolution.

2. Set the STORAGE switch to ON and the DISPLAY TIME control to the desired repetition rate.

NOTE

The oscilloscope Calibrator may be used as the A and B Inputs to show operation, i.e., connect a 1 kHz, 0.4 V Calibrator signal to the A Input and set the SOURCE switch to the outward position. With the CLOCK set to 10 ns and the AVERG switch set to X10, the 7D15 digital display will be "1000.000 µs 10X" ± calibrator accuracy.

CIRCUIT DESCRIPTION

INTRODUCTION

This section of the manual contains a description of the circuitry used in the 7D15 Universal Counter Timer plug-in. The circuitry starts with a block diagram discussion. Following the block diagram discussion is a detailed discussion of the individual circuits.

A basic knowledge of discrete and digital electronics is needed for a thorough understanding of the instrument. If more information about commonly used circuits is desired, refer to the following text books:

Jacob Millman and Herbert Taub, "Pulse, Digital, and Switching Waveforms", McGraw-Hill, New York, 1965.

To understand the 7D15 readout circuitry, a basic knowledge of the Tektronix 7000-Series readout system is required. A brief synopsis, labeled "Readout Theory" is given in this section. More information is available in any service manual for a Tektronix 7000-Series, readout-equipped mainframe.

LOGIC FUNDAMENTALS

Signal lines in this instrument are named to indicate the state at which the indicated function is performed. For example, the line labeled "RESET" means that the affected circuits are reset when this line is HI; the line labeled "$\overline{\text{RESET}}$" (RESET —NOT) means that the affected circuits are reset when this line is LO.

BLOCK DIAGRAM DESCRIPTION

GENERAL

The following discussion is provided to aid in understanding the overall concept of the 7D15 before the individual circuits are discussed in detail. A block diagram of the 7D15 is shown in the Diagrams section. Only the basic interconnections between the individual blocks are shown on the block diagram. Each block represents a major circuit within the instrument. The number on each block refers to the schematic on which the complete circuit is found.

The Block Diagram is broken into five functional blocks: Input, Clock, Gate, Reset, and Counters and Readout. The following Block diagram description is divided into these five categories.

INPUT

The Input section conditions the signal for use in the Gating circuitry. This section includes the signal source, coupling, amplitude, polarity, slope, trigger level, A ARM, and B ARM functions.

Input signals can be connected to the A or B Inputs, depending on the mode used. With the Source switch in the outward position, the signal connected to the A Input is internally connected to the B input circuitry. The AC-DC Attenuator Blocks select the type of coupling and the amount of attenuation required. In addition, when the 7D15 is used in an oscilloscope horizontal plug-in compartment, the AC-DC attenuator circuitry can select the oscilloscope internal triggers. These triggers are generated in the vertical plug-in unit.

The signals pass through the AC-DC Attenuator to the A Amplifier and B Amplifier, where the signal is amplified and the dc trigger level is selected. The Trigger Level connectors can be used as an output to show the actual dc trigger level selected, or through the use of an external power supply, can select the dc trigger level.

CLOCK

The clock circuitry provides a standard against which the input signal is compared. The standard is obtained either from; a precision crystal oscillator, which provides the One Megahertz Standard, an external input connected to the EXT CLOCK IN, or the Voltage Controlled Oscillator referenced to either the One Megahertz Standard or the EXT CLOCK IN.

The One Megahertz Standard signal is derived from the five megahertz crystal oscillator, by way of the ÷ 5 block. An external standard signal can be substituted by selecting the EXT Position of the External Clock switch and by applying the external standard to the EXT CLOCK connector. The external clock signal is shaped for use with the rest of the clock circuitry. The One Megahertz Standard is connected to a series of decade counters to provide the 1 μs, 10 μs, 1 ms, and 10 ms Clock signals. The 100-

megahertz Voltage Controlled Oscillator (VCO) and decade counter provides the 10 ns and 100 ns Clock signal. The Voltage Controlled Oscillator is stabilized with a phase-locked loop circuit, in which the 100 megahertz output is divided by 100 and compared with the One Megahertz Standard. The frequency difference from the Phase Detector is a dc error voltage and is presented to the Voltage Controlled Oscillator to correct any drift.

After amplification and level selection, the signals are shaped in the A and B Shapers. The signals are then connected to the A Arm and B Arm circuitry (by way of the Slope circuits). This circuitry can, with the proper command, inhibit the signal from any further travel. A LO or ground connection to the A ARM connector will inhibit the B signal while a HI command at the B ARM connector will inhibit the A signal. These signals, if not inhibited, are connected to the gating circuitry.

GATE

For simplicity, the Gate block is discussed in each mode of operation. A block diagram, showing the main signal flow, is given for each mode.

FREQUENCY MODE

Refer to Fig. 3-1 for signal flow. The frequency to be measured is connected to the B input through the B circuitry; then to the main gate. The 10 ms Frequency Standard is connected through the A Arm circuit to the Gate Generator and the Arm Gate Generator. The 10 ms pulse sets the Arm Gate Generator and the Gate Generator HI. This enables the AND gate and opens the Main Gate. Opening the Main Gate allows the B signal to be counted. The next 10 ms pulse sets the Arm Gate Generator LO, which causes the AND Gate to go LO, turning the Main Gate off. A LO at the output at the AND

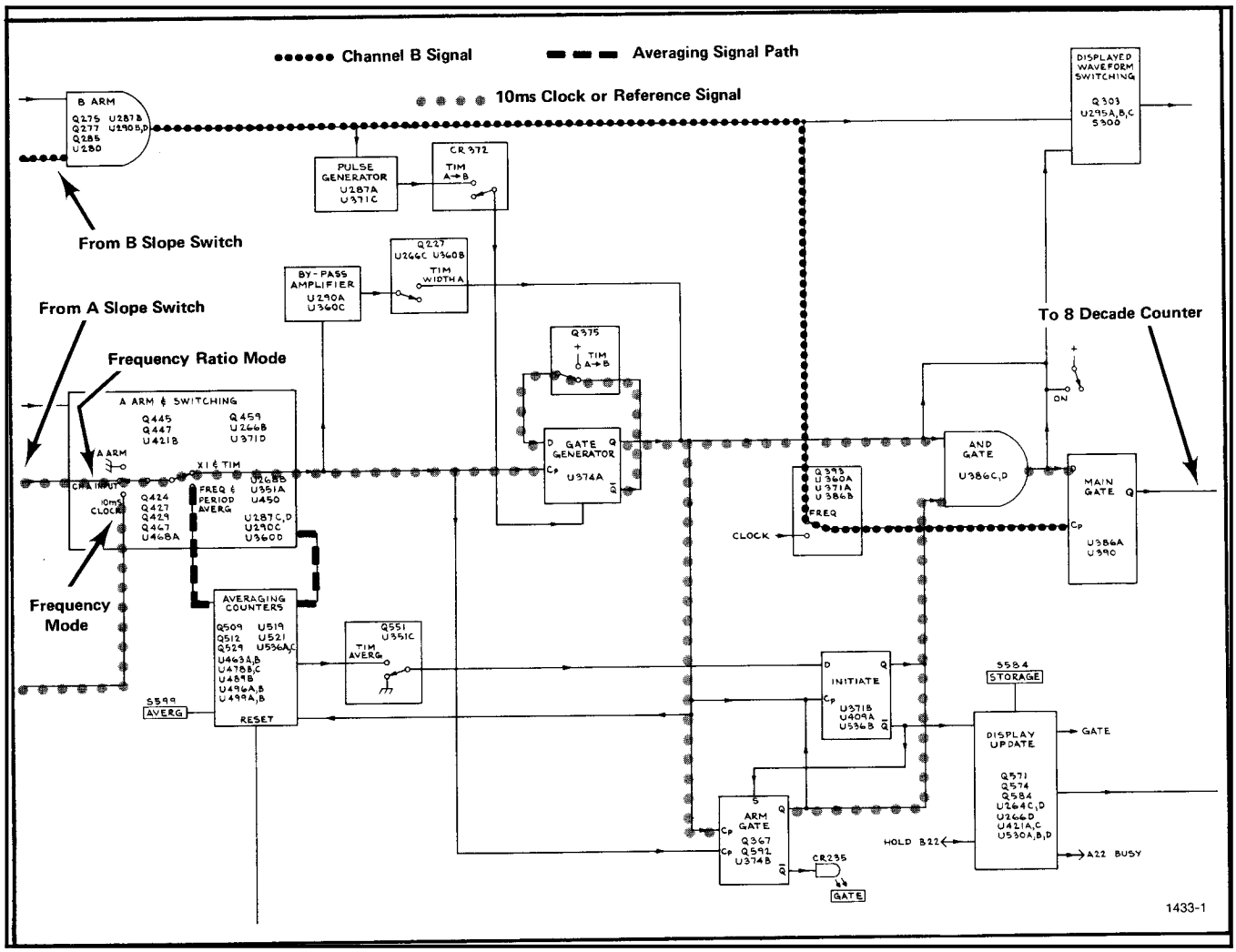

Fig. 3-1. Signal flow for FREQ and Frequency Ratio modes.

Gate also flips the Initiate Generator and in turn generates the Mono Update command. This starts the Timer. The signal to the Mono Update causes the information in the 8 Decade Counters to be stored and converted into the proper row and column set by the Display Time Control, a reset command is generated; the entire instrument is now ready for another measurement cycle.

Frequency measurements can also be made by using 100 ms, 1 s, and 10 s Timing Standards. The process is the same as for the 10 ms Time Standard, except that the 10 ms clock pulses are diverted, after passing through the A Arm circuit, into a series of decade counters. The output of the counters are selected by the TIME switch to give 100 ms, 1 s, or 10 s pulses. The Time switch also provides commands to change the readout and legends for proper readout (kHz, MHz, etc.)

FREQUENCY MODE. In the frequency mode, U360A is enabled, allowing the frequency to be counted, (from the B Arm circuitry) to pass to U386B and U390. This unknown signal is connected to the main gate (U386A) via U386B. This signal also clocks a D flip-flop U390. The D input of U390, derived from the 10 millisecond time standard, remains high for 10 milliseconds. The signal path for U390 arrives via U286A, U287C, U290C, U287D, and to pin 9 of U374A and pin 9 of U374B. U374B, which was set prior to the start of the measurement cycle (see Reset Circuitry), is clocked by the 10 millisecond standard. This causes pin 15 to go LO thus enabling U386D. The 10 millisecond standard is also clocked through U374A, inverted in U386C and passed through the enabling gate U386D. Pin 15 of U386D therefore goes HI, presenting a HI to the D input of U390. With the arrival of the unknown signal, pin 3 of U390 goes LO, thus enabling the main gate, U386A, which allows the unknown signal to be counted. With the arrival of the next 10 millisecond clock, pin 2 of U374A goes LO, pin 15 of U386D goes LO, and a LO is presented to the D input of U390. Pin 3 of U390 therefore goes HI with the next pulse from the unknown signal. This enables the main gate (U386A) and stops the counting process.

INITIATE. Prior to the second 10 millisecond clock, U374B was determined to be LO. This enabled U536B so that the second 10 millisecond pulse clocks U409A. This causes pin 3 to go HI, causing Q571 to turn on and Q574 to turn off. The collector of Q574 goes HI, is inverted in U530D, and connects through U530A to provide a gate pulse. This starts the display-time multiplier (see reset circuitry). In addition, pin 6 of U530B goes HI and is held HI, by the feedback loop of C581 and U530A, until C581 discharges. The pulse at pin 6 of U530B generates the $\overline{\text{DISPLAY}}$ via U421C and U266D. The contents of the counters are stored, encoded, then read out on the crt.

FREQUENCY RATIO

Refer to Fig. 3-1 for signal flow. An external time standard can be used for frequency measurements by setting the gate switch to OFF. This replaces the 10 ms Frequency Standard with the signal connected to the A Input. Frequency ratio measurements are made in this mode.

FREQUENCY RATIO. The operation in the Frequency Ratio mode is the same as for the frequency measurements, except the internal 10 millisecond standard is replaced by the signal connected to the EXT CLOCK connector. Refer to the discussion of the clock circuitry.

EVENTS

Refer to Fig. 3-2 for signal flow. The front panel GATE switch is set to ON. This opens the Main Gate and allows the signal to be counted. Pressing the GATE switch to OFF closes the Main Gate and provides an initiate command to complete the cycle.

EVENTS. In the events mode, the signal to be counted is connected to channel B. The signal to be counted is connected to the main gate (U386A) via U386B, U360A, and U390D. The main gate is enabled by placing the GATE switch to ON. This clears U374B and sets U374A. This causes pins 12 and 13 of U386D to be LO, pin 15 goes HI and the D input of U390 goes HI. The signal to be counted clocks U390, pin 3 goes LO and U386A is enabled. When the GATE switch is set to OFF, the signal passes through U266C, U351B, and Q354; from whence it clears U374A (via Q460) and sets U374B (via Q367). This in turn sets U386D LO, placing a LO at the D input of U390, and eventually inhibiting the main gate (U386A).

PERIOD

Refer to Fig. 3-3 for signal flow. The period to be measured is selected from the signal connected to the A Input. The trigger level is selected by the coupling switch, attenuator, level controls, and slope controls. The signal passes through the A Arm circuit to the Gate Generator and Arm Gate Generator. The outputs of the Gate Generator and Arm Gate Generator go HI. This causes the AND Gate to go HI and the Main Gate opens.

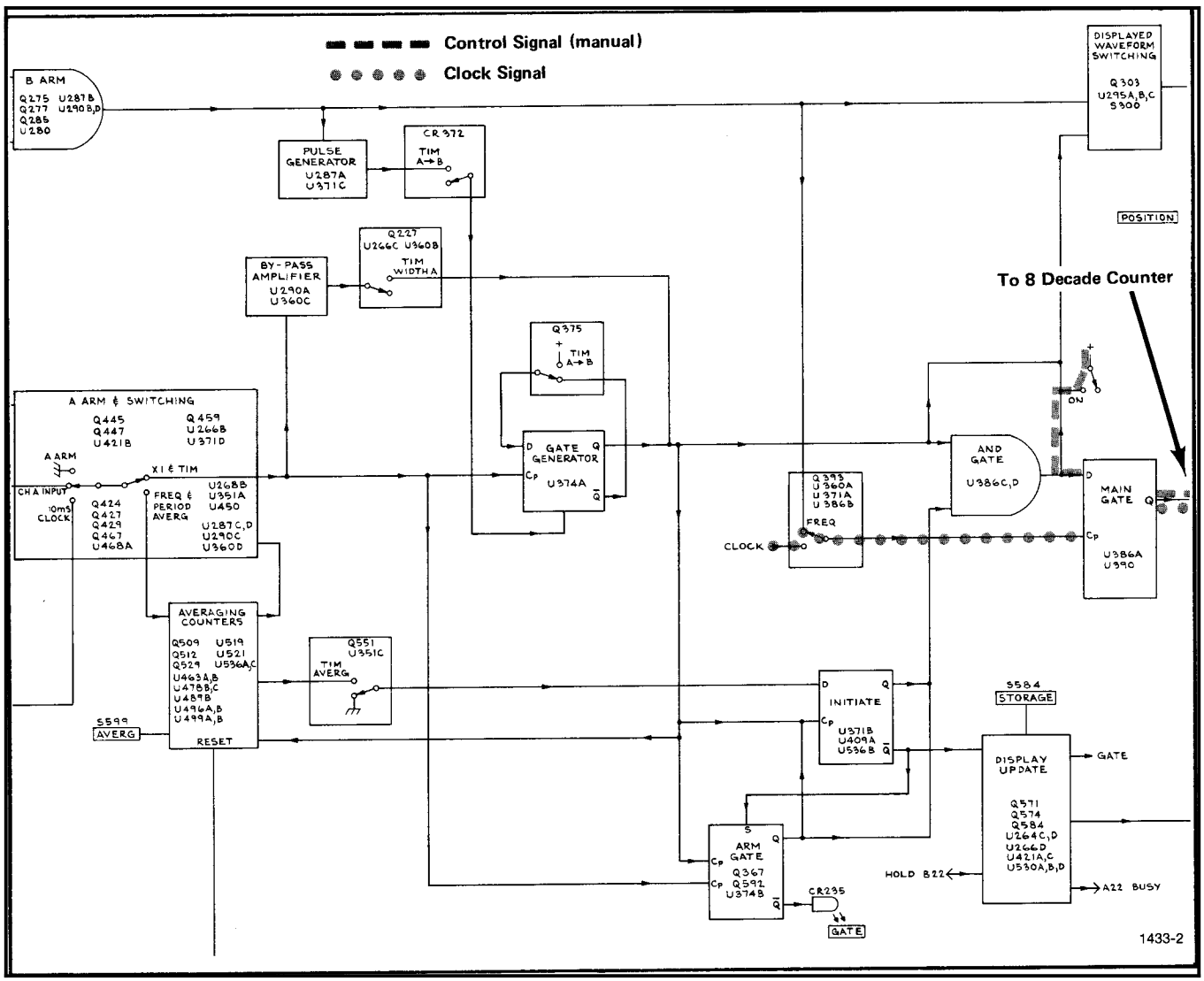

Fig. 3-2. Signal flow for Events mode.

In the period mode, the clock frequency selected by the CLOCK switch is connected to the Main Gate. When the Main Gate is open, the clock pulses are counted in the 8 Decade Counters. The second waveform from the A circuitry sets the Arm Gate Generator LO, and in turn sets the AND Gate LO, thus closing the Main Gate. The initiate command is given and the storage, read, and reset cycles are completed.

PERIOD. The period of a waveform is measured by counting the number of clock pulses that occur within the period. The clock is connected to the main gate (U386A) via U371A and U386B. The period waveform is connected to U374A and U475B via U287C, U290C, and U287D. The period pulses clocks U274B, pin 15 goes LO and U386D is enabled. U374A is also clocked, pin 2 goes HI, is inverted in U386C and presented to U386D. This causes the D input of U390 to go HI. A clock pulse from Q393 causes pin 3 of U390 to go LO, thus enabling the main gate U386A. This allows the clock to be counted. With the arrival of the second pulse (signifing the end of the period to be measured) U374A is clocked, U386D is inhibited, the D input of U390 goes LO and U386A is inhibited. Also, the initiate commands are given via U409A.

PERIOD AVERAGING

Refer to Fig. 3-3 for signal flow. The period averaging mode uses the same procedure as the period mode, except that the signal from the A Arm circuit is routed through a series of decade counters. The number of averages correspond to the counters switched in by the Average switch.

PERIOD AVERAGING. Period averaging is achieved by holding the main gate (U386A) on for 10, 100, or 1000 periods. This is accomplished by deflecting the A input through the averaging counters. In the period averaging mode, the LO state of PERIOD, (coupled through U371D, Q459, U266B, and U351A) disables U290C and enables U360D. The channel A signal is connected to the averaging counters via U463A. The operation of the averaging counters for the period mode is similar to the operation in the frequency mode.

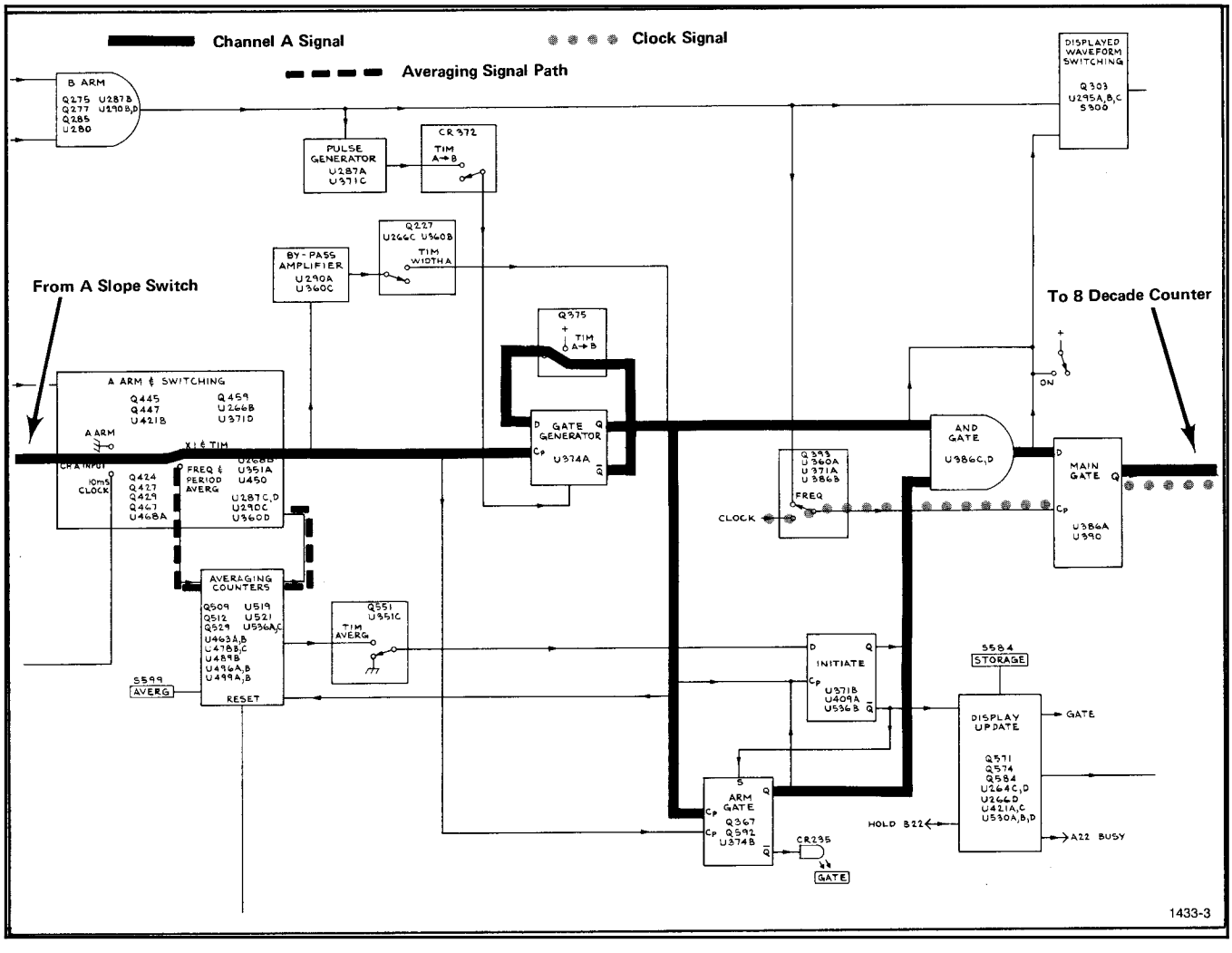

Fig. 3-3. Signal flow for PERIOD mode.

TIM WIDTH A

Refer to Fig. 3-4 for signal flow. The signal at the A input is processed through the attenuators, amplifiers, shaper, slope circuit, and A Arm circuit. This signal bypasses the Gate Generator via the Bypass Amplifier. The signal also flips the Arm Gate Generator HI, which in turn opens the Main Gate to allow the clock pulses to be counted.

TIM A→B

Refer to Fig. 3-5 for signal flow. The TIM A→B mode, in effect, opens the Main Gate with a trigger from the A Input, then closes the Main Gate with the a trigger from the B Input. The procedure is as follows: The A signal is processed through the attenuators, amplifiers, shaper, and slope circuit. The signal is then connected to the Gate Generator and Arm Gate Generator as in the Period mode. The AND Gate goes HI and the Main Gate opens. The B signal, after being processed through the B attenuator, amplifier etc., is connected to the Gate Generator clear input. This sets the Gate Generator output LO and closes the Main Gate.

TIM A→B AND TIM WIDTH A AVERAGE

Refer to Fig. 3-4 and Fig. 3-5 for signal flow. The averaging procedure for the TIM mode is different than for the period or frequency modes of operation. The TIM averaging modes allow the Main Gate to open and close 10, 100, or 1,000 times. This is accomplished by disabling the Initiate Generator until after 10, 100 or 1,000 measurements are made. The input signal is connected to the Averaging Counters via the Bypass Amplifier in the TIM WIDTH A mode, or to the Gate Generator in the TIM A→B mode. The output of the Averaging Counters inhibits the Initiate generator until after 10, 100, or 1,000 pulses of the input signals are counted. The Initiate generator, in turn, clears the Arm Gate and holds it until after the preselected number of averages. The AND Gate, therefore, opens and closes to allow the main gate to make 10, 100 and 1,000 separate measurements.

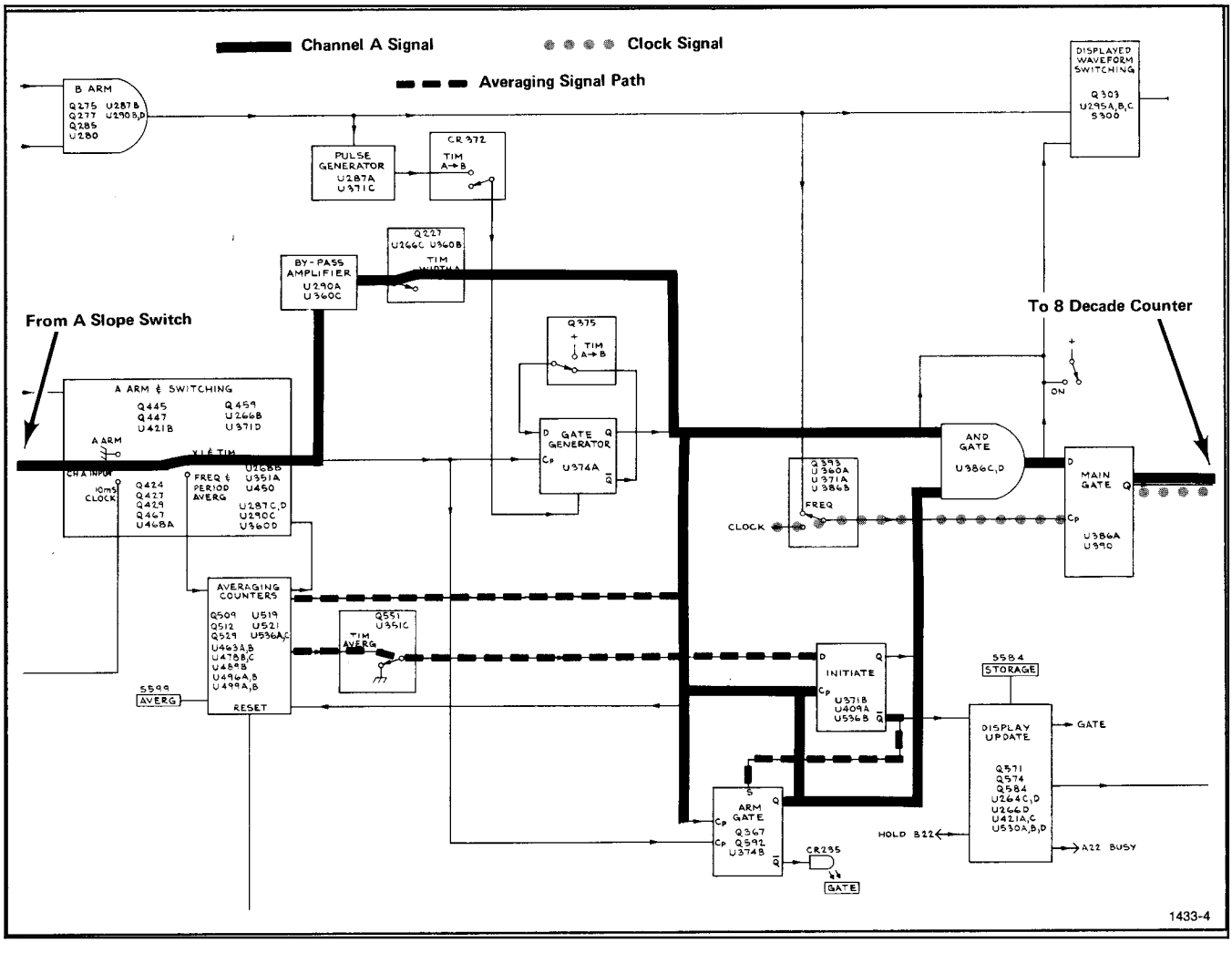

Fig. 3-4. Signal flow for TIM WIDTH A mode.

OUTPUTS

The Display Waveform Amplifier can present any one of three waveforms. The Pseudo Gate, CH B, or True Gate. The Pseudo Gate signal is the Gate Generator output. This waveform represents the time that the Main Gate would be open if the Arm Gate Generator would allow it. The True Gate waveform is the actual time that the main Gate is open. The CH B output of the Displayed Waveform Amplifier is the B signal after it has been processed through the attenuators, amplifiers, shaper, slope amplifier, and B Arm circuit.

COUNTERS AND READOUT

Pulses from the Main Gate are counted by the Eight Decade Counters. Upon a Display Update command, the information is stored and converted into the proper row and column currents necessary to encode the Tektronix 7000-Series readout system.

Decimal point, legends, etc., representing the state of the front panel switches, are also converted into row and column currents to encode the Tektronix 7000-Series readout system.

RESET

The internally generated Reset and $\overline{\text{Reset}}$ signals are generated at the end of display time or by a Ext Reset command. The function of the Reset and $\overline{\text{Reset}}$ commands are to set the Eight Decade Counters, set the Averaging Counters, provide a busy signal to external equipment, and to set, then clear, the Initiate generator. Ext Reset resets the entire instrument, including the display.

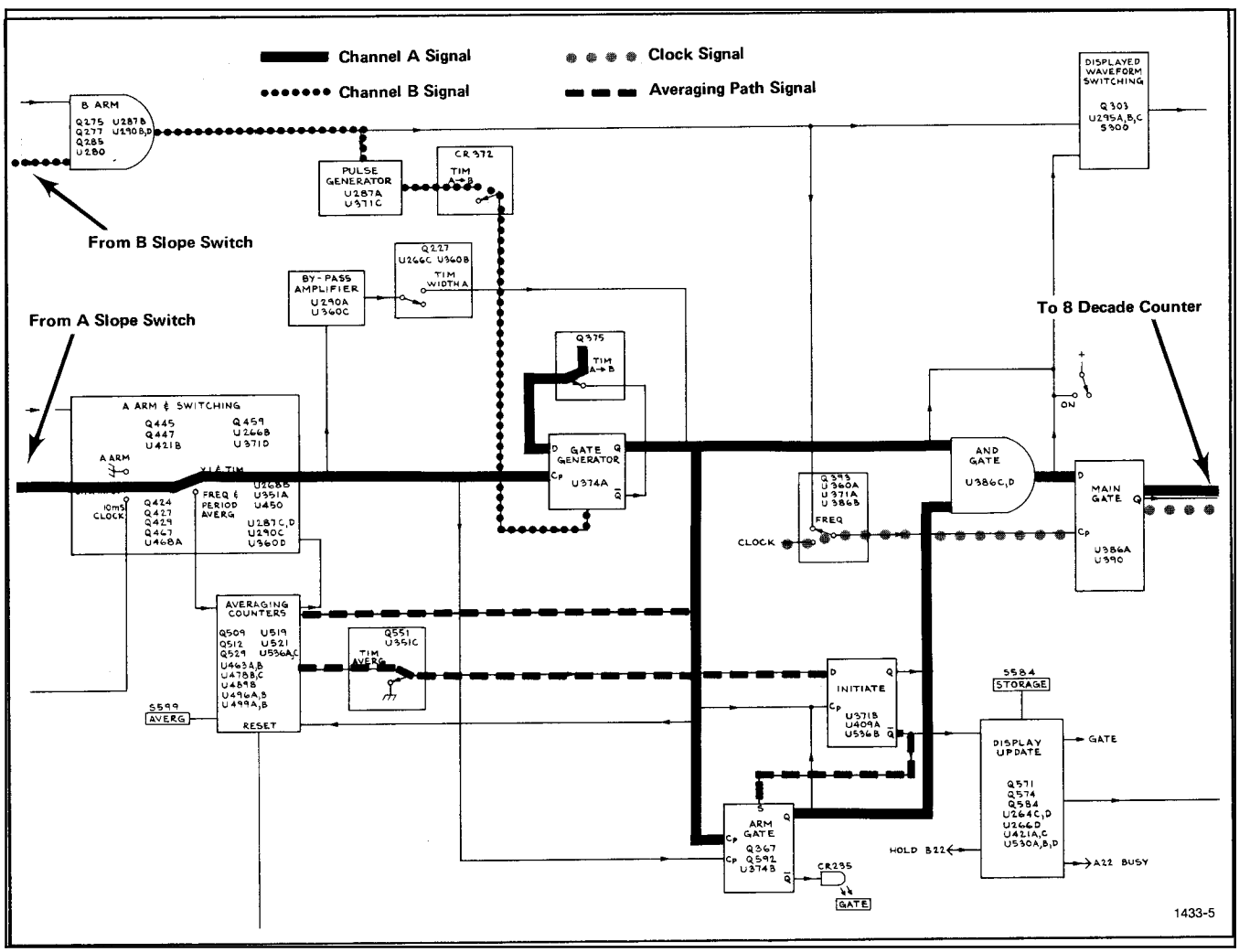

Fig. 3-5. Signal flow for TIM→B mode.

TRIGGER INPUT AMPLIFIERS

Refer to Diagram 1. Connectors J1 and J101 provide a means for connecting the A and B signals to the 7D15. With the A COUPL switch in the DC position, the signal connected to the CH A input is connected to the A SENS switches through C4 and R4. With the A COUPL switch in the AC position, the path is through C2, and R2, and the dc blocking capacitor C5. The A signal then passes through the X100 attenuator, the X10 attenuator, or passes directly to the AC Amplifier, depending upon the A TRIGGER SENS switch position. The attenuators are hybrid devices that furnish the appropriate attenuation and compensation. Each attenuator is replaceable as a unit.

The trigger source position of S11 and S111 disconnects the A or B signal and connects the internal trigger signal.

INTERNAL TRIGGER

The 7D15 has access to the oscilloscope trigger signal when plugged into an oscilloscope horizontal plug-in compartment. This differential trigger signal is connected to differential amplifier Q203-Q213, via pins A20 and B20 of the Mainframe connector; see Diagram 1. Q203 and Q213 form a paraphase amplifier. The base of Q217 (a single-ended amplifier) is driven by Q203; the emitter of Q217 is driven by Q213. CR203 provides the offset necessary for proper operation of Q217. The output of Q217 is ac-coupled through C219 to provide inputs to the A and B Amplifiers.

A AMPLIFIER

The input signal is connected to the AC Amplifier, which consists of Q25, Q32, and Q38, and the DC Amplifier, consisting of U43. R17 provides the one megohm input resistance. R18 is a current limiting resistor and C18 provides ac bypass. CR20, CR21, CR22, and CR23 provide overvoltage protection for the amplifiers. Q25 source follower is ac-coupled through C27 into amplifier Q32, and the low output impedance amplifier Q38. R31 provides the high-frequency gain adjustment for Q32. VR36 provides the 12-volt supply for Q32 and Q38. The output of the AC Amplifier is ac coupled into Schmitt Trigger Q60-Q65.

The dc path for the input signal is provided by amplifier U43. The input signal is connected to the non-inverted (+) input of the operational amplifier through R44. R49 sets the quiescent dc operating level for amplifier U43. R57, the LEVEL control, is used to select the dc operating level of U43. J52, trigger level jack, provides a means for monitoring the level set by R57, or it can be used to provide an external trigger level. A portion of the ac signal from Q38 is connected into the feedback loop of U43 to keep the output of both of the amplifiers constant throughout the frequency range. L41 couples the dc signal to the shaper and prevents U43 from degrading the high-frequency performance of the AC Amplifier.

SHAPER

The outputs of the AC and DC Amplifiers are connected to the Shaper circuit, consisting of Q60 and Q65, a fast Schmitt Trigger. VR67 and VR69 provide dc offset necessary to drive the following stage (slope circuit).

SLOPE CIRCUITRY

The signal from the Shaper circuit is connected to paraphase amplifiers Q72-Q74 and Q79-Q81. With S89 in the + position, Q72 and Q74 are held off; Q87 is forward-biased, thus providing emitter current to Q79 and Q81. The signal is passed through T75 to the next stage. With S89 in the − position, Q87 is turned off and emitter current is provided for Q72 and Q74.

TIME BASE

TIME STANDARD

Refer to Diagram 4. The five-megahertz crystal oscillator (Y622) output is divided by counter U625, then used as the One-Megahertz Standard signal for the 7D15. With S626 in the EXT position, an external standard can be used.

A signal connected to J601 is ac-coupled to the Schmitt Trigger (Q606-Q614) through C603. R602 provides current limiting and C602 provides ac bypass. CR603 and CR604 are over-voltage protectors. R613 provides positive feed-back for high-speed operation. The output of the Schmitt Trigger is coupled through amplifier Q620 to provide the external standard.

CLOCK SIGNALS

The 1 μs, 10 μs, 1 ms, and 10 ms frequency standard are derived directly from the One Megahertz Standard. CLOCK switch S699, in conjunction with the four nand gate sections of U676, selects the appropriate frequency, counted down from the One Megahertz Standard by decade counters U665, U668, and U671. After selection, the signal is coupled to U371A (Diagram 2) and Q694-Q696, the Clock Out circuit. After conditioning by the Clock Out circuit, the signal is coupled to front-panel CLOCK OUT connector J697, by way of connector J696.

Selection of the 1 μs position of the clock switch S699 presents a LO to the input of U678B and a HI to pin 8 of U676C. This enables U676C and allows the One Megahertz Standard to pass directly through to the Clock Out circuit.

Selection of the 10 μs position of S699 presents a LO to U678C and a HI to U676B. This enables U676B and allows the output of decade counter U665 to pass. The output of U665 is the One Megahertz Standard divided by 10.

Selection of the 1 ms position of S699 presents a LO to U678D and a HI to U676A. This enables U676A and allows the output of decade counter U671 to pass. The output of U671 is the One Megahertz Standard divided by 1000.

The 10 ms frequency standard is derived by dividing the One Megahertz Standard by 10,000 in U665, U668, U671, and U674. The reset command connected to pin 1 of U674 ensures that the 10 ms frequency standard will be ready.

The 10 ns and 100 ns clocks are derived from the 100 megahertz oscillator U643. Selection of the 10 ns position of S699 presents a low to Q687. This turns Q687 on and allows Q689 to turn on. Q689 then passes the 100 megahertz output of U643 to the Clock Out circuit.

Selection of the 100 ns position of S699 causes the output of U678A to go low. This enables U676D and allows the 10 megahertz output of Q660 to pass. The 10 megahertz output of Q660 is derived from the 100 megahertz oscillator, U643. U647A, U647B, U654A, and U654B compose a high speed decade counter. Q655 and Q660 is a buffer used to match the MECL output of Q647B to the TTL input of U662.

100 MHz OSCILLATOR

U643 is a voltage-controlled oscillator and is connected in a phase-lock loop with the One Megahertz Standard, The output of U643 is divided by 100 by decade counters U647A, U647B, U654A, and U654B and by decade counter U662. The output of U662 is approximately one megahertz. This one megahertz signal is compared to the One Megahertz Standard in U628A. The resulting output of U628B is a dc voltage level representing the phase difference between the One Megahertz Standard and the 1 megahertz signal from U662. This dc voltage level is connected through source follower Q633A to amplifier U628C. Q633B is a current source to provide stabilization for Q633A. The dc voltage at pin 8 of U628C is connected to varicap CR641, which in turn corrects the frequency of 100 megahertz oscillator U643. L641 is adjusted (by squeezing or expanding the coil) to ensure that CR641 is at the center of its operating range. C638, C637, and R637 are used to slow the reaction time of the phase detector.

ARM INPUTS

A ARM

With no input, Q445 is biased off by divider R441, R443, and R444. This forward biases Q447, which holds the data input of U450 (Pin 11) HI. With the arrival of a clock pulse (derived from the Channel A input, via Q429, or in the frequency mode, the 10 ms clock, via U268A and Q467) pin 3 of U450 will go LO. This enables Gate U287D to allow the Channel A signal to pass. Gate U360D is also enabled to allow the averaging modes to be used. To disable the input, a ground is connected to the A ARM input. This forward-biases Q445, reverse-biases Q447 and in turn places a LO at the data input of R450. With the arrival of the next clock pulse, pin 3 will go HI to inhibit U287D and U360D.

B ARM

With no input to the B ARM, Q275 is forward-biased. Q277 is reversed-biased and Pin 11 of U280 is LO, enabling gates U287A and U295D. +5 volts, applied to B ARM, will reverse-bias Q275, forward-bias Q277 and apply a HI to pin 11 of U280. With the arrival of the next clock pulse (derived from the channel B input via Q285), pin 2 of U280 goes HI to disable gates U287A and U295D. The polarity of the B ARM command can be reversed by moving the internal strap to connect U290D with the $\overline{Q}$ output of U280 (pin 3). This mode of operation requires +0.5 volt at the B ARM connector to allow the signal to pass. Removal of the +0.5 volt will inhibit the signal.

RESET CIRCUITRY

The internally generated RESET and $\overline{\text{RESET}}$ pulses are generated at the end of the displayed time or by $\overline{\text{Ext Reset}}$. The function of the RESET and $\overline{\text{RESET}}$ pulses is to set the eight decade counters, set the averaging counters, provide a busy signal for external equipment, and set, then clear, U409A (to start a new measurement).

RESET and $\overline{\text{RESET}}$ pulses are generated as follows: At the end of display time, unijunction transistor Q258 will switch on momentarily. A positive pulse is applied through C261 to reverse-bias diode CR262. This momentarily removes the LO from the input of U264A, which in turn applies a momentary LO at Pin 2 of U266A and a momentary HI on the RESET line. A few nanoseconds later (the transit time of U268D), a momentary LO is presented to the $\overline{\text{RESET}}$ line. The RESET line is connected to the set inputs of counters U401, U409B, U413A, and U413B. The RESET line is also connected to pins 1 and 2 of U289A. If the instrument is not in the Period mode, pin 12 of U489A will go LO, and pin 8 of U489C will go momentarily HI. This sets or clears the averaging counters: U519, U521, U496A, U496B, U499A, and U499B. (U409A is also set.) The $\overline{\text{RESET}}$, which occurs a few

nanoseconds after RESET, is delayed even longer through U264B and U530C. The delayed $\overline{\text{RESET}}$ pulse is then differentiated by C532 and LR532, and used to clear U409A. (U409A was just set by the RESET pulse.)

The $\overline{\text{RESET}}$ line is also connected to U264D, which provides a LO to pin 1 of U421A and a HI to the busy line.

Complete resetting of the entire instrument, including the display is initiated by the $\overline{\text{EXT RESET}}$ line. The $\overline{\text{EXT RESET}}$ command is generated by applying a HI to the front panel RESET connector, pressing the RESET pushbutton, switching the gate switch to NORM, or by a command through the rear interface connector (B15). The $\overline{\text{EXT RESET}}$ command generates a RESET and $\overline{\text{RESET}}$ pulse via U266A. The $\overline{\text{EXT RESET}}$ is also connected to pin 10 of U421C. The $\overline{\text{EXT RESET}}$ command causes pin 8 of U421C to go HI and, if there is no external hold command connected to B22 of the rear interface connector, the display line will go LO, thus resetting the display readout. $\overline{\text{EXT RESET}}$ also connects to pin 5 of U351B, where it clears U374A and presets U374B.

Q490 and U478A are used, in addition to the previously discussed reset lines, to accommodate the various modes of operation. When the gate switch is placed into the OFF position or taken out of the OFF position, the averaging counters are reset and U409A is set. When the gate switch is set to OFF and when not in the FREQ mode, the averaging counters are reset and U409A is set and held. This is to allow frequency ratio measurements.

READOUT THEORY

GENERAL

The 7D15 displays its readout on the upper and lower portion of the oscilloscope crt. The upper readout contains the numerals, decimal point, and overflow indicator (>). The lower word location gives the units in which the measurements are made (MHz, μs, EVENTS, etc.). The upper readout (Channel 1 readout) is discussed first.

Tektronix 7000-Series readout systems contain time-slot pulses corresponding to each letter of signal in a word. Ten time slots are available for each word. A row and a column current return line is associated with each word location. In the case of the 7D15, there are two word locations available, the upper crt readout and the lower crt readout. All that is required to encode a letter or signal is to connect the correct value resistors between the desired time slot and the row and column return lines. The value of the resistors determine the current flowing into the row and column return lines. The matrix (Figure 3-6) shows the row and column currents necessary to select any of the available symbols. For instance, to display the number five, 0.6 milliamp of column current and 0.1 milliamp of row current is necessary. Refer to any 7000-Series, readout-equipped oscilloscope service manual for detailed readout information.

CH 1 COLUMN AND ROW DATA

Refer to Diagram 5. The 7D15 has a measurement capacity of up to 8 digits. Each of the 8 digits has an associated time-slot line. The time-slot line number 2 (TS-2) corresponds to the most significant digit in the readout. Time-slot number 9 (TS-9) corresponds to the least significant digit. Time-slot 1 is used to encode the overflow indication (>). Time-slot 10 is used to encode the location of the decimal point. Since time-slot 10 is the last pulse to occur, it is also used for a transfer pulse.

DECADE COUNTERS

Refer to Diagram 4. U741 is a BCD-to-analog converter. It supplies current from time-slots 1, 8, 9, and 10 to the column return line. The magnitude of current corresponds to the BCD input. Inputs at pins 1, 2, 3, and 4 are active only during time-slot 9 and thus are the units input. The output from the biquinary counters (divide by 2-divide by 5) on Diagram 2 is connected to the biquinary to BCD converter, which consists of Q703, Q705, Q709, Q711, Q713, Q715, Q717, Q719, U725A, U725C, and U725D. The output of the biquinary to BCD converter is connected to pins 2, 3, 6, and 7 of U735. U735, at the proper time, will store the count and transfer it to U741. The O output pulses of the biquinary counter equal one-tenth of the actual count. These pulses are connected to the decade counter U728 via Q703 and Q701. The BCD output of U728 is connected to storage register U732 which, at the proper time, stores the count and transfers it to U741. The BCD output of U732 corresponds to the tens digit. R743 and R744 supplies the extra 0.1 mA of current needed to correct the output of U741.

The C and D outputs of U728 are connected to the clock input of U587. CR729 and CR730 connect the C and D outputs of U728 to provide a wide, usable pulse.

U758 contains four decade counters, four 4-bit storage registers, and four BCD- to-analog converters. The BCD to analog converters are connected to, respectively, time-slot 7, time-slot 6, time-slot 5, and time-slot 4. This provides the proper column currents for the 100's, 1000's, 10,000's, 100,000's digits. R756 standardizes the current levels so that they are compatible with the oscilloscope readout system. Pin 6 of U758 is the current output line. The count output of U758 is connected to the input of U762. U762 is similar to U758, except only two decade counters and two 4-bit latches and two BCD-to-analog converters are used. Pins 14 and 13 supply the time-slot 3 and time-slot 2 pulses for the 1 millions and 10 millions digits. R760 standardizes the output of U762 so that it is compatible to the oscilloscope readout system.

ROW NUMBER \ COLUMN NUMBER →	CURRENT (MILLI-AMPERES)	C-0	C-1	C-2	C-3	C-4	C-5	C-6	C-7	C-8	C-9	C-10
R-1	0	SKIP[1]	0	1	2	3	4	5	6	7	8	9
R-2	0.1		↓	<	I	/	+	−	+	C	Δ	>
R-3	0.2		ADD[1] ONE ZERO	ADD[1] TWO ZEROS	SHIFT[1] PREFIX ←	SHIFT[1] PREFIX ← AND ADD ONE ZERO						IDENTIFY[1]
R-4	0.3		m	μ	n	p	X	K	M	G	T	R
R-5	0.4		S	V	A	W	H	d	B	c	Ω	E
R-6	0.5		U	N	L	Z	Y	P	F	J	Q	D
R-7	0.6				DECIMAL[1] POINT LOCATION NO. 3	DECIMAL[1] POINT LOCATION NO. 4	DECIMAL[1] POINT LOCATION NO. 5	DECIMAL[1] POINT LOCATION NO. 6	DECIMAL[1] POINT LOCATION NO. 7			
R-8	0.7											
R-9	0.8											
R-10	0.9	ADD SPACE IN DISPLAY[1]										

Fig. 3-6. Character Selection Matrix for 7000-Series Readout System.

UNUSED LOCATIONS. AVAILABLE FOR FUTURE EXPANSION OF READOUT SYSTEM

[1] OPERATIONAL ADDRESS.

1195-25

CH 2 COLUMN/ROW DATA

Refer to Diagram 6. Column converter U890 and Row converter U898 provide appropriate column and row currents when one or more inputs (pins 1 through 13 and pin 20), receive a low, and in turn are interrogated by time-slot pulses applied to pins 14, 15, 16 and 17. Various symbols and combinations of symbols have been given word designations, and are shown in a matrix. See Fig. 3-7.

With the NORM switch depressed, current is steered to the inputs of the Column and Row converters by TIME AVERAGE switch S599 and CLOCK switch S699, which select the desired character or possible combinations of characters for display on the crt. Depressing the FREQ B button and cancelling the NORM button will produce the EVENTS character.

With the FREQ B button depressed, a high is placed at the bases of Q815 through Q821, turning those transistors on, which in turn pull down on the bases of Q823 through Q861, turning them all off. Pin 12 of U790D and the emitters of Q869, Q874, and Q879 also receive a high, turning them all off. When the ON or OFF mode switch is depressed, a $\overline{\text{NORM}}$ is received at pin 13 of U790D, making it high. This causes pin 11 to become low and turns off Q884. This turns of Q866, Q870, Q875, and Q880 by removing their emitter current. So, in the FREQ mode and the NORM switch out, a low appears at pins 20 of U890 and U898. This is the input for the word twelve, which is displayed as EVENTS when both IC's are strobed from time-slots 3 through 8. Therefore, whenever the frequency mode is used, the CLOCK and TIME switch have no effect on the display and only the word EVENTS will be displayed.

Characters may be displayed from the selections of TIME switch S599, when in the Frequency mode, by depressing the NORM switch. This causes a $\overline{\text{NORM}}$ (low) at pin 13 of U790D, causing the output of U790D to go high. This cancels the EVENTS display and turns on Q884, providing emitter current to transistors Q866, Q870, Q875 and Q880. The $\overline{\text{NORM}}$ also turns on Q803, which provides current for TIME switch S599. Depressing the 10 ms button on TIME switch S599 causes a high at the base of Q866, pulling its collector down. This low is coupled through CR865 and on to the DP5 line, which causes the decimal point 5 to be displayed. A low is also coupled through CR866 and CR867, placing a low at pins 13 and 3 of U890 and U898. Pin 13 is word one, and writes MHZ 1. Pin 3 is word nine and writes one 0. With Q884 conducting, its collector is low, which gets coupled through CR884, placing a low at pin 2 of U890 and U898. Pin 2 is word ten and writes ms. So, with the TIME switch in the 10 ms position, the characters MHZ 10mS is displayed on the lower readout location of the crt.

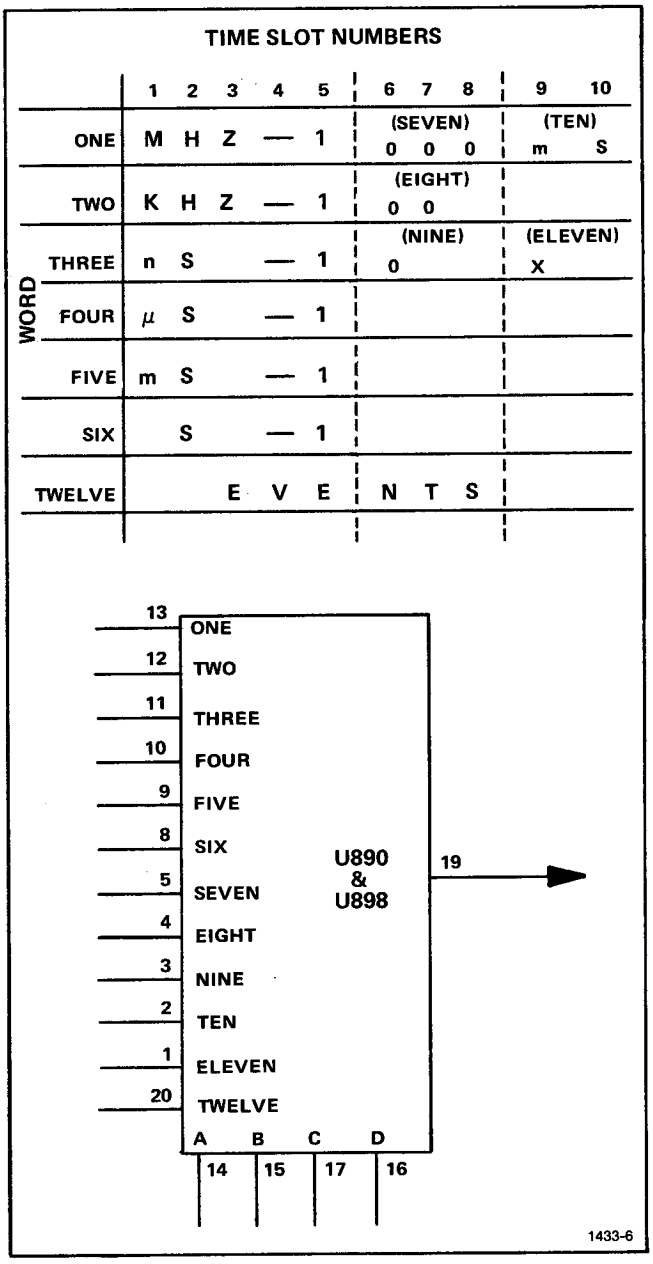

Fig. 3-7. Symbol and Word designation Matrix.

The characters for the 100 ms and 1 s switch positions are developed in a similar pattern. However, in the 10 s position, the Q896 circuitry ("milli-cruncher") is required for a proper readout display. In the 10 s position Q880 is turned on, its collector goes low, and the low is then coupled through CR878 and on to the DP5 line. A low is also coupled through CR880 and CR881, placing a low at pins 12 and 2 of U890 and U898. Transistor Q884 still remains on, so we see characters KHZ 10mS displayed on the crt. To correct the reading, the character m must now be removed. Referring to Fig. 3-6, Character Selection Matrix, the lower case m requires 100 μA of column current, and is written during time-slot 9, as illustrated in Fig. 3-7. Transistor Q896 serves as a three-input NAND

gate, with TS9, pins 12 and 3 of U890 providing the inputs. These three lines are low during time-slot 9, which turns off Q896 and raises its collector up. This causes a 100 μA current drop across R897, subtracting it from the column output line. Thus, no current is available during time-slot 9, and the character m is removed from the readout display. Since 300 μA of row current is being supplied during time-slot 9, and a total of 900 μA of current is needed to add a space in the display, the character s moves over next to the character O.

The characters for the CLOCK switch S699 positions, in conjunction with TIME switch S599 are developed in a similar pattern and produce the various symbols and combinations of symbols as illustrated in Fig. 3-7.

A diode matrix provides time-slot information to the A, B, C, and D inputs of Digital-Analog converters U890 and U898 in BCD code, but displaced by a count of one. Time-slot 2 pulls down on A input, TS3 on B input, TS4 on both A and B inputs. This results in a BCD count of 1, 2, and 3, rather than 2, 3, and 4. Time-slot 1 doesn't enter the IC but this information is produced when A, B, C, and D inputs become high. Normally, this would produce a 0 count. However, the displacement of 1 pattern causes this to be a count of 1. During this time, the internal resistors are all interrogated, depending on what word is selected at the input, and provides the proper row and column current for the display information.

OVERFLOW

When an overflow condition occurs, a HI appears at Pin 3 of U762. This causes Q782 and Q778 to latch, putting a LO at Pin 10 of U790C. This causes Pin 4 of U725B to go LO, giving an overflow command to U741.

GATING

Because of the complexity of the various modes of operation, the gating circuitry is discussed in each mode and we use a > symbol displayed at the top of the screen.

AVERAGING COUNTERS. If a time standard other than 10 millisecond is used (front panel TIME switch set to 100 ms, 1 s, or 10 s), the 10 millisecond clock is deflected through the averaging counters. In the 100 ms, 1 s, and 10 s positions (not X1), U371D disables U290C and enables U360D; U463A is enabled at pin 4 via Q459 and U266B. This deflects the 10 millisecond clock through U463A to the decade counter consisting of U496A, U496B, U499A, and U499B. When the front panel switch is set to 100 ms (X10), Q529 is off. The 10 millisecond clock is divided by 10 in the decade counter and the resulting 100 millisecond clock is connected to U374A and U374B via U463B and U360D. Otherwise, the operation is the same as for the 10 millisecond clock.

If the TIME switch is set to 1 s (X100), Q529 is turned on and U478B is inhibited. The output of the decade counter (pin 14, U499B) is connected to divide-by-10 counter U519 via the level shifting network Q509 and Q512. The output of U519 is a 1 second pulse. It is connected to U374A and U374B via U489B, Q529, U463B, and U360D. When the TIME switch is set to 10 s (X1000), Q529 and U478B are enabled. The output of U519 is divided by 10 in U521 and is connected to U374A and U374B via U478C, U478B, and the path used for one-second operation.

TIM WIDTH A. In the TIM Width A mode, U374A is cleared and held via Q360, Q354, U351B, and Q227. By means of Q227, $\overline{\text{TIM WIDTH}}$ also enables U360B and turns on Q367. The interval to be measured therefore bypasses U374A and connects to U386C via U360B, U360C, U290A, U287D, U290C, and U287C. The interval to be measured is inverted in U386C, which presents a LO to pin 13 of U386D. U374B is also clocked by the interval via Q367. As a result, pin 15 of U374B goes LO and the output of U386D goes HI. This presents a HI to the D input of U390. The clock is connected to the main gate via U371A and U386B. U390 is toggled via Q393, which in turn enables the main gate and allows the clock to be counted. At the end of the time interval, pin 10 of U386C goes LO, pin 13 of U386D goes HI, pin 15 goes LO, which is presented to the D input of U390. When U390 is toggled, pin 3 goes HI and the main gate (U386A) is inhibited. At the same time, U409A is clocked and the initiate commands are given.

TIM AVERAGING. TIM averaging is achieved by making 10, 100, or 1000 measurements before resetting the counters. This is accomplished by holding the initiate generator (U409A) until after 10, 100, or 1000 measurements are made. In the TIM averaging mode, the D input of U409A is held LO and U536A is enabled via Q551 and U351C. The intervals to be averaged are connected to the averaging counters via U536A. The output of the averaging counters is U536C. After the selected 10, 100, or 1000 intervals are counted, pin 15 of U536C goes HI, presenting a HI to the D input of U409A. U409A is now able to be clocked and initiate command is given. To prevent U374B from inhibiting U386D during the averaging measurements, it is set and held via U371B and U409A.

TIM A→B. The TIM A→B mode effectively enables the main gate with a signal from the channel A input and disables the main gate with a signal from the channel B input. The channel A input is connected to U374A and U374B via U287D, U290C, and U287C. In the TIM A→B mode, the D input of U374A is set HI. The start, or the channel A signal, clocks U374A and U374B, thus enabling U386D. This presents a HI to the D input of U390. The clock is connected to the main gate (U386A) via U386B and U371A. U390 is clocked via Q393, which in turn enables the main gate and allows the clock to be counted. The stop, or channel B signal, is connected to the clear input of U374A via the shaper circuit; U287A, U371C, and U290D. With the arrival of the stop signal, U374A is cleared, U386D is disabled and a LO is presented to the D input of U390. The initiate command is also given via U536B.

−5-VOLT SUPPLY

Refer to Diagram 7. The −5-volt switching regulator provides the necessary current for the digital integrated circuits. Q980 is the series-pass element. Comparator Q984-Q986 is referenced to 5 volts by divider R989-R990. The output of the power supply is fed into the comparator. This increases or decreases Q986 collector voltage, which varies the base and emitter of Q982. When the output of the power supply drifts negative, the compartor senses it and causes the collector of Q986 to move negative. This in turn causes Q982 to turn Q980 off. Excess current at this point is returned to the circuit through Q993, thus protecting Q980 and increasing the efficiency. When the output drifts positive, Q980 is turned back on. Theoretically, Q980 will be conducting one third of the time.

The output is filtered by C995, L996, and C996. VR995 ensures that the output will not raise above 6.2 volts. C997 provides high frequency filtering.

MAINTENANCE

INTRODUCTION

This section of the manual contains maintenance information for use in preventive maintenance, corrective maintenance, and troubleshooting of the 7D15.

Further maintenance information relating to general maintenance can be found in the instruction manuals for the 7000-Series oscilloscopes.

PREVENTIVE MAINTENANCE

GENERAL

Preventive maintenance, consisting of cleaning, visual inspection, etc., performed on a regular basis, will improve the reliability of this instrument. Periodic checks of the semiconductor devices used in the unit are not recommended as a preventive maintenance measure. See semiconductor-checking information given under Troubleshooting.

CLEANING

CAUTION

Avoid the use of chemical cleaning agents which might damage the plastics in this instrument. Avoid chemicals containing benzene, toluene, xylene, acetone, or similar solvents.

FRONT PANEL. Loose dust may be removed with a soft cloth or a dry brush. Water and mild detergent may be used; however, abrasive cleaners should not be used.

INTERIOR. Cleaning the interior of the unit should precede calibration, since the cleaning process could alter the settings of the calibration adjustments. Use low-velocity compressed air to blow off the accumulated dust. Hardened dirt can be removed with a soft, dry brush, cotton-tipped swab, or cloth dampened with a mild detergent and water solution.

LUBRICATION

Use a cleaning-type lubricant on shaft bushings, interconnecting plug contacts, and switch contacts. Lubricate switch detents with a heavier grease. A lubrication kit containing the necessary lubricating materials and instructions is available through any Tektronix Field Office. Order Tektronix Part No. 003-0342-00.

RECALIBRATION

To ensure accurate measurements, the 7D15 should be checked after each 1000 hours of operation or every six months if used infrequently. A complete performance check procedure is given in Section 5.

The performance check procedure can be helpful in isolating major troubles in the unit. Moreover, minor troubles not apparent during regular operation may be revealed and corrected.

TROUBLESHOOTING

GENERAL

The following is provided to augment information contained in other sections of this manual when troubleshooting the 7D15. The schematic diagrams, circuit description, and calibration sections should be used to full advantage. The circuit description section gives detailed information on circuit behavior and output requirements.

TROUBLESHOOTING AIDS

DIAGRAMS. Circuit diagrams are given on foldout pages in Section 7. The circuit number and electrical value of each component in this instrument are shown on the diagrams. Important voltages and semiconductor lead configurations are also shown.

COMPONENT LOCATOR. The circuit boards used in the 7D15 are outlined on the schematic diagrams. A representation of each circuit board is shown, in most cases, on the back of the preceding circuit diagram. These board representations outline all the board mounted electrical components and identify them by their circuit number.

COMPONENT AND WIRING COLOR CODE. Colored stripes or dots on resistors and capacitors signify electrical values, tolerances, etc., according to the EIA standard color code. Components not color coded usually have the value printed on the body.

The insulated wires used for interconnection in the 7D15 are color coded to facilitate tracing a wire from one point to another in the unit.

TROUBLESHOOTING EQUIPMENT

The following equipment is useful for troubleshooting the 7D15.

1. Semiconductor Tester—Some means of testing the transistors and diodes used in this instrument is helpful. A transistor-curve tracer such as the Tektronix 576 will give the most complete information.

2. DC Voltmeter and Ohmmeter—A voltmeter for checking voltages within the circuit and an ohmmeter for checking resistors and diodes is required.

3. Test Oscilloscope—A test oscilloscope is required to view waveforms at different points in the circuit. A Tektronix 7000-Series oscilloscope equipped with a readout system, 7D13 Digital Multimeter unit, 7B-Series Time-Base unit, and a 7A-Series Amplifier unit with a 10X probe will meet the needs of both items 2 and 3.

4. Plug-in Extender—A fixture that permits operation of the unit outside of the plug-in compartment for better accessibility during troubleshooting. Order Tektronix Part No. 067-0616-00.

TROUBLESHOOTING PROCEDURE

This troubleshooting procedure is arranged in an order which checks the simple trouble possibilities before proceeding with extensive troubleshooting.

NOTE

A small portion of the 7D15 Main Interface board is inaccessible due to the location of the Power Supply board. The Power Supply board, however, can be flipped up and out of the way. Remove the Power Supply board, turn it on end, and plug it in using the three accessory connectors located on top of the Power Supply board.

1. Check Control Settings. An incorrect setting of the 7D15 controls can indicate a trouble that does not exist. If there is any question about the correct function or operation of a control or front-panel connector, see the Operators Manual.

2. Check Associated Equipment. Before proceeding with troubleshooting, check that the equipment used with this instrument is operating correctly. If possible, substitute an amplifier unit known to be operating correctly into the indicator unit and see if the problem persists. Check that the input signals are properly connected and that the interconnecting cables are not defective.

3. Visual Check. Visually check the portion of the instrument in which the trouble is suspected. Many troubles can be located by visual indications, such as unsoldered connections, broken wires, damaged circuit boards, damaged components, etc.

4. Check Instrument Performance. Check the calibration of the unit, or the affected circuit by performing Performance Checks of Section 5. The apparent trouble may only be a result of mis-adjustment and may be corrected by calibration.

5. Check Voltages. Often the defective component or stage can be located by checking for the correct voltage in the circuit. Typical voltages are given on the diagrams; however, these are not absolute and may vary slightly between instruments. To obtain operating conditions similar to those used to take these readings, see the instructions in the Diagrams section.

6. Check Individual Components. The following methods are provided for checking the individual components in the 7D15. Components which are soldered in place are best checked by disconnecting one end to isolate the measurement from the effects of surrounding circuitry.

A. TRANSISTORS AND INTEGRATED CIRCUITS. The best check of transistor operation is actual performance under operating conditions. If a semiconductor is suspected of being defective, it can best be checked by substituting a component known to be good; however, be sure that circuit conditions are not such that a replacement might also be damaged. If substitute transistors are not available, use a dynamic tester (such as Tektronix 576). Static-type testers may be used, but since they do not check operation under simulated operating conditions, some defects may go unnoticed. The schematic shows base pin and socket arrangements of semiconductor devices. Be sure the power is off before attempting to remove or replace any semiconductor component.

Integrated circuits can be checked with a voltmeter, test oscilloscope, or by direct substitution. A good understanding of the circuit description is essential to troubleshooting circuits using integrated circuits. Use care when checking voltages and waveforms around the integrated circuits so that adjacent leads are not shorted together.

B. DIODES. A diode can be checked for an open or shorted condition by measuring the resistance between

terminals. With an ohmmeter scale having an internal source of between 800 millivolts and 3 volts, the resistance should be very high in one direction and very low when the leads are reversed.

CAUTION

Do not use an ohmmeter scale that has a high internal current. High currents may damage the diodes.

C. RESISTORS. Check resistors with an ohmmeter. Resistor tolerance is given in the Electrical Parts List. Resistors normally do not need to be replaced unless the measured value varies widely from the specified value.

D. CAPACITORS. A leaky or shorted capacitor can be detected by checking resistance with an ohmmeter on the highest scale. Use an ohmmeter which will not exceed the voltage rating of the capacitor. The resistance reading should be high after initial charge of the capacitor. An open capacitor can best be detected with a capacitance meter, or by checking whether the capacitor passes ac signals.

7. Repair and Readjust the Circuit. Special techniques required to replace components in this unit are given under Component Replacement. Be sure to check the performance of any circuit that has been repaired or that has had any electrical components replaced. Recalibration of the affected circuit may be necessary.

CORRECTIVE MAINTENANCE

GENERAL

Corrective maintenance consists of component replacement and instrument repair. Special techniques required to replace components in this instrument are given here.

OBTAINING REPLACEMENT PARTS

STANDARD PARTS. All electrical and mechanical part replacments for the 7D15 can be obtained through your local Tektronix Field Office or representative. However, many of the electronic components can be obtained locally in less time than is required to order them from Tektronix, Inc. Before purchasing or ordering replacement parts, check the parts list for value, tolerance, rating and description.

NOTE

When selecting replacement parts, it is important to remember that the physical size and shape of a component may affect the performance of the instrument, particularly at high frequencies. All replacement parts should be direct replacments unless it is known that a different component will not adversely affect instrument performance.

SPECIAL PARTS. In addition to the standard electronic components, some special parts are used in the 7D15. These parts are manufactured or selected by Tektronix, Inc., in accordance with our specifications. These special parts are indicated in the parts list by an asterisk preceding the part number. Most of the mechanical parts used in this instrument have been manufactured by Tektronix, Inc. Order all special parts directly from your local Tektronix Field Office or representative.

ORDERING PARTS. When ordering replacement parts from Tektronix, Inc., include the following information:

1. Instrument Type.

2. Instrument Serial Number.

3. A description of the part (if electrical, include circuit number).

4. Tektronix Part Number.

SOLDERING TECHNIQUES

WARNING

Disconnect the instrument from the power source before soldering.

CIRCUIT BOARDS. The components mounted on the circuit boards in the 7D15 can be replaced using normal circuit board soldering techniques. Keep the following points in mind when soldering on the circuit board:

1. Use a pencil-type soldering iron with a wattage rating from 15 to 50 watts.

2. Apply heat from the soldering iron to the junction between the component and the circuit board.

3. Heat-shunt the lead to the component by means of a pair of long-nose pliers.

4. Avoid excessive heating of the junction with the circuit board, as this could separate the circuit board wiring from the base material.

5. Use electronic grade 60-40 tin lead solder.

6. Clip off any excess lead length extending beyond the circuit board. Clean off any residual flux with a flux-removing solvent.

METAL TERMINALS. When soldering metal terminals (potentiometers, etc.) use 60-40 tin lead solder and a 15 to 50 watt soldering iron. Observe the following precautions when soldering metal terminals:

1. Apply only enough heat to make the solder flow freely.

2. Apply only enough solder to form a solid connection. Excess solder may impair the funciton of the part.

3. If a wire extends beyond the solder joint, clip off the excess.

4. Clean the flux from the solder joint with a flux-removing solvent.

COMPONENT REPLACEMENT

WARNING

Disconnect the equipment from the power source before replacing components.

SEMICONDUCTOR REPLACEMENT. Transistors and integrated circuits (IC's) should not be replaced unless actually defective. If removed from their sockets during routine maintenance, return them to their original sockets. Unnecessary replacement of semiconductors may affect the calibration of this instrument. When semiconductors are replaced, check the performance of the part of the instrument which may be affected.

Replacement semiconductors should be of the original type or a direct replacement. Lead configuration of the semiconductors used in this instrument are shown on the schematic diagrams. If the replacement semiconductor is not of the original type, check the manufacturer's basing diagram for proper basing.

RECALIBRATION AFTER REPAIR

After any electrical component has been replaced, the calibration of that particular circuit should be checked, as well as the calibration of other closely related circuits. The Performance Check instructions given in Section 5 provide a quick and convenient means of checking the instrument operation. The Adjustment procedure in Section 5 can then be used to adjust the operation to meet the Performance Requirements listed in Section 1.

@

CALIBRATION

INTRODUCTION

To ensure instrument accuracy, check the calibration of the 7D15 every 1000 hours of operation or every six months, if used infrequently. Before complete calibration, thoroughly clean and inspect this instrument as outlined in the Maintenance section.

TEKTRONIX FIELD SERVICE

Tektronix, Inc., provides complete instrument repair and recalibration service at local Field Service Centers and the Factory Service Center. Contact your local field office or representative for further information.

PERFORMANCE CHECK

The performance of this instrument can be checked by performing only the √ CHECK steps. Performing the steps marked with a √ indicates that the instrument is checked against the tolerances listed as a Performance Requirement (see Specification section in Operators Manual).

Limits and tolerances given in other check steps are calibration guides and should not be interpreted as instrument specifications. Front-panel adjustments are adjusted as part of the Performance Check procedure.

CALIBRATION

To verify proper calibration of the 7D15 and to prevent unnecessary recalibration of the entire instrument, perform the Adjust— portion of a step only if the tolerance given in the Check— part of the step is not met.

For best overall instrument performance when performing a complete calibration procedure, make each adjustment to the exact setting even if the Check— is within allowable tolerance.

TEST EQUIPMENT REQUIRED

GENERAL

The test equipment and accessories (or its equivalent) required for complete calibration of the 7D15 are listed in Table 5-1. Specifications given for the test equipment are the minimum necessary for accurate calibration. Therefore, the specifications of any test equipment used must meet or exceed the listed specifications. All test equipment is assumed to be correctly calibrated and operating within the listed specifications. Detailed operating instructions for the test equipment are not given in this procedure. Refer to the instruction manual for the test equipment if more information is needed.

SPECIAL CALIBRATION FIXTURES

Special Tektronix calibration fixtures are used in this procedure only where they facilitate instrument calibration. These special calibration fixtures are available from Tektronix, Inc. Order by part number through your local Tektronix Field Office or representative.

CALIBRATION EQUIPMENT ALTERNATIVES

All of the listed test equipment is required to completely check and adjust this instrument. The calibration procedure is based on the first item of equipment given as an example of applicable equipment. When other equipment is substituted, control settings or the calibration setup may need to be altered slightly to meet the requirements of the substitute equipment. If the exact item of test equipment given as an example in the Test Equipment list is not available, first check the Specifications column carefully to see if any other equipment is available which might suffice. Then check the Usage column to see what this item of test equipment is used for. If used for a check or adjustment that is of little or no importance to your measurement requirements, the item and corresponding step(s) can be deleted.

TABLE 5-1

REQUIRED TEST EQUIPMENT

Description	Minimum Specifications	Usage	Examples of Applicable Test Equipment
1. Oscilloscope	Tektronix 7000-series mainframe with four plug-in compartments. Minimum system bandwidth (vertical plug-in plus mainframe): 225 MHz.	Used throughout procedure to provide power, readout and display.	1. Tektronix 7904 Oscilloscope Mainframe. 2. Tektronix 7704A or 7504 may be used if steps 13 and 14 are not checked.
2. Vertical Plug-In Unit	Tektronix 7A-series plug-in unit. Minimum sensitivity: 5 mV/div; system bandwidth: 225 MHz.	Used throughout procedure to provide vertical display.	1. Tektronix 7A16A Amplifier.
3. Time-Base Plug-In	Tektronix 7B-series plug-in unit. Fastest sweep rate: 0.1 μs/div.	Used throughout procedure to provide sweep.	1. Tektronix 7B50 Time Base Plug-In.
4. Digital Voltmeter (DVM)	Range: 0 V to 3 V; accuracy: $\pm$5%; resolution: 3 digits.	Used for steps 1 and 10.	1. Tektronix DM 501 Digital Multimeter.[1] 2. Tektronix 7D13 Digital Multimeter.
5. Sine-Wave Generator	Frequency range: 3 MHz and 70 MHz to 225 MHz; peak-to-peak amplitude: 0.5 V to 4 V into 50 Ω.	Used for steps 2, 6, 12, 13, 14 and 15.	1. SG 503
6. Square-Wave Generator	Repetition rate: approximately 1 kHz; rise time: approximately 0.5 μs amplitude: 0.5 V to 12 V into 50 Ω.	Used for steps 3, 4 and 5.	1. Tektronix FG 501 Function Generator.[1] (PG 506) 2. Tektronix 106 Squarewave Generator.
7. Pulse Generator	Pulse amplitude: 0.5 V peak-to-peak; pulse rise time: $\leq$1 ns.	Used for step 12.	1. Tektronix PG 502 Pulse Generator.[1] (PG 506) 2. Tektronix 106 Squarewave Generator (Fast Rise portion).

[1]**Requires TM 500-series mainframe.**

TABLE 5-1 (cont)

Description	Minimum Specifications	Usage	Examples of Applicable Test Equipment
8. Low-Frequency Sine-Wave Generator	Frequency range: 2 Hz to 20 Hz; amplitude: 100 mV to 800 mV peak-to-peak.	Used for steps 8 and 9.	1. Tektronix FG 501 Function Generator.[1] ~~WAVE TEK 135~~ FG507 2. General Radio 1301B Sine-Wave Generator.
9. NBSFS WWV Frequency Standard.		Used for step 16.	
10. Time-Mark Generator	Range: 10 ns marker and 1 s marker; accuracy: 20 ppm: amplitude: at least 100 mV.	Used for steps 11 and 13.	1. Tektronix TG 501 Time-Mark Generator.[1] 2. Tektronix 2901 Time-Mark Generator. 3. Tektronix 184 Time-Mark Generator.
ACCESSORIES			
11. RC Normalizer	RC Time constant: 1 MΩ X 22 pF.	Used for step 5.	1. Tektronix Part Number 067-0538-00.
12. Feed-Through Termination	Impedance: 50 Ω; connectors: BNC.	Used throughout procedure.	1. Tektronix Part Number 011-0049-01.
13. 10X Probe	Compatible with selected Vertical Plug-In. Frequency Response: DC to 225 MHz.	Used throughout procedure for signal connection to the Vertical Plug-In.	1. Tektronix P6054A 10X Probe.
14. Flexible Extender	For 7000-series plug-ins.	Used throughout procedure.	1. Tektronix Part Number 067-0616-00.
15. 10X Attenuator	Impedance: 50 Ω; connectors: GR; accuracy: ±2%.	Used for step 4 and when necessary for attenuation.	1. Tektronix Part Number 017-0078-00.
16. Adapter	Connectors: GR to BNC male.	Used throughout procedure.	1. Tektronix Part Number 017-0064-00.
17. "T" Adapter	Connectors: BNC.	Used for step 7.	1. Tektronix Part Number 103-0030-00.
18. 42-Inch Cable (2)	Connectors: BNC; impedance: 50 Ω.	Used throughout procedure for signal connection.	1. Tektronix Part Number 012-0057-01.
19. 10 ns Cable	Delay: 10 ns; connectors: GR; impedance: 50 Ω.	Used for step 12 and throughout for signal connection.	1. Tektronix Part Number 017-0501-00.
20. 5 ns Cable	Delay: 5 ns; connectors: GR; impedance: 50 Ω.	Used for step 12.	1. Tektronix Part Number 017-0502-00.
21. Short-Circuit Termination.	Fixed short with GR connectors.	Used for step 12.	1. General Radio Type 874-WN.

[1]**Requires TM 500-series mainframe.**

CALIBRATION PROCEDURE

GENERAL

The following procedure is arranged so that the 7D15 can be calibrated with the least interaction of adjustments and reconnection of equipment. The control settings and test equipment setup, throughout this procedure, continue from the preceding step(s) unless otherwise noted. Refer to Figure 5-1 for location of adjustments.

NOTE

Control titles that are printed on the front panel of the 7D15 are totally capitalized in this procedure (e.g., LEVEL). Internal adjustments and associated equipment controls are initially capitalized only (e.g., oscilloscope Vertical Mode).

PRELIMINARY PROCEDURE FOR CALIBRATION

1. Remove the side panels of the 7D15.

2. Insert the Flexible Extender into the Right Vertical compartment of the oscillsocope. Plug the 7D15 into the Flexible Extender.

3. Insert the Time Base Plug-In in the oscilloscope B Horizontal compartment.

4. Insert the Vertical Plug-In in the oscilloscope Left Vertical compartment.

5. Connect oscilloscope to a suitable power source, turn on and allow 20 minutes warmup before proceeding.

NOTE

This instrument should be calibrated at an ambient temperature of +20° C to +30° C for best overall accuracy. The performance of the instrument can be checked at any temperature within the 0° C to +50° C range.

PRELIMINARY CONTROL SETTINGS

OSCILLOSCOPE

Vertical Mode	Left
Horizontal Mode	B
Trigger Source	Vertical Mode

Other controls as desired

VERTICAL PLUG-IN

Volts/Division	5 mV
AC-DC-GND	AC
Polarity	+ UP

Other controls as desired

TIME-BASE PLUG-IN

Trigger Source	Internal

Other controls as desired

7D15 PLUG-IN

SLOPE (A and B)	+ (in)
COUPL (A and B)	AC (in)
SOURCE	INPUT A (out)
P-P SENS (A and B)	.1 V
Displayed Waveform Selector	PSEUDO GATE
GATE	NORM
MODE	PERIOD A
AVERG	X1
CLOCK	1 ms
STORAGE	ON

TIME TO DO - 2.5HRS

INDEX TO CALIBRATION PROCEDURE

√1. Trigger Level Range (Check) Page 5-5

2. Trigger Preset (Check/Adjust) Page 5-5

3. Trigger Amplifier Compensation (Check/Adjust) Page 5-7

√4. Attenuator Accuracy (Check) Page 5-7

5. Input Compensation (Check/Adjust) Page 5-8

√6. Trigger Range (Check) Page 5-8

√7. Trigger Slope (Check) Page 5-8

√8. AC Coupling (Check) Page 5-9

√9. External Clock (Check) Page 5-9

10. Phase Lock Voltage (Check/Adjust) Page 5-9

√11. Period A Accuracy (Check) Page 5-9

√12. TIM Width A and TIM A→B Accuracy (Check) Page 5-10

√13. Input Trigger Sensitivity (Check) Page 5-11

√14. Internal Trigger Source (Check) Page 5-11

√15. A and B ARM (Check) Page 5-12

16. Clock (Check/Adjust) Page 5-12

√1. TRIGGER LEVEL RANGE (CHECK)

a. Connect the DVM between the Channel A TRIG LEVEL jack and ground.

b. Check for a DVM reading of +0.5 V to −0.5 V or greater while rotating the Channel A LEVEL control from fully counterclockwise to fully clockwise (but not in detent).

c. Connect the DVM between the Channel B TRIG LEVEL jack and ground.

d. Check for a DVM reading of +0.5 V to −0.5 V or greater while rotating the Channnel B LEVEL control from fully counterclockwise to fully clockwise (but not in detent).

e. Disconnect all test equipment.

2. TRIGGER PRESET (CHECK/ADJUST)

a. Set the 7D15 A and B LEVEL controls to PRESET.

b. Connect the input of the Vertical Plug-In unit between test point 41 (see Figure 5-1) and ground using a 10X probe. Set the Vertical Plug-In sensitivity to 5 mV/division (to obtain 50 mV/division with 10X probe).

c. Connect a 3 MHz sine-wave through a Feed-Through Termination and 10X Attenuator to the Channel A Input. Adjust the amplitude of the Sine-Wave Generator to obtain a four-division crt display.

d. Check that the aberrations are centered about the center of the sine wave (see Figure 5-2).

IF aberrations do not appear increase sig. gen output until they do, then slowly decrease output to 4 cm displ

e. Adjust R49 to center the aberrations about the center of the sine wave (see Figure 5-2).

DO THESE!

f. Move the 10X probe to test point 141.

~~f. Repeat step e except use input B~~

~~g. Select Source B Input B~~

g. Check that the aberrations are centered about the center of the sine wave (see Figure 5-2).

IF signal is not present check the existence of wire noted on Trig. Amp. Input diagram ①

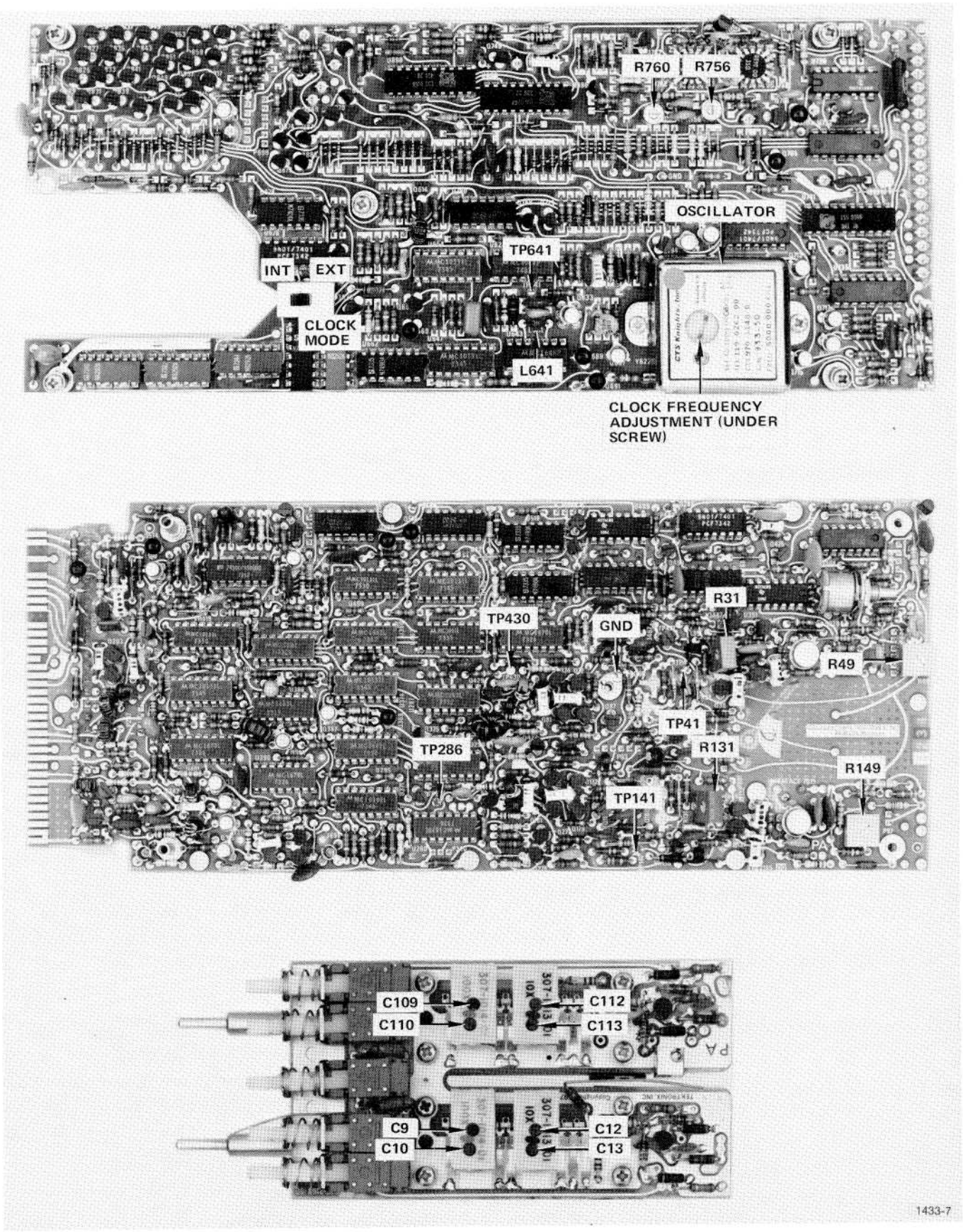

Fig. 5-1. Location of Adjustments and Test Points.

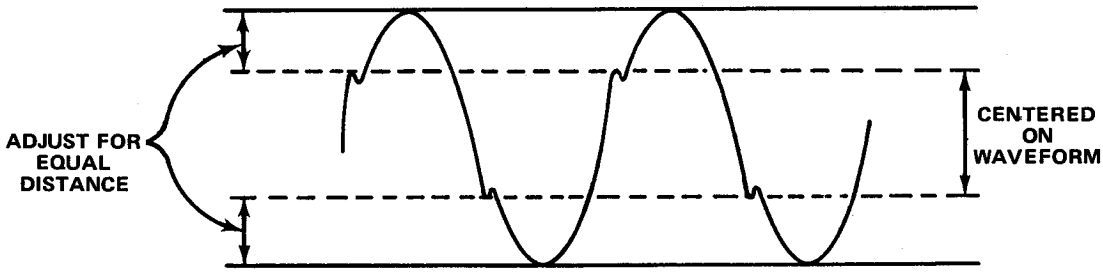

Fig. 5-2. Method for adjusting trigger preset.

h. Adjust R149 to center the aberrations about the center of the sine wave (see Figure 5-2).

i. Disconnect the Sine-Wave Generator. Leave 10X Probe connected for step 3.

3. TRIGGER AMPLIFIER COMPENSATION (CHECK/ADJUST)

a. Connect the Square-Wave Generator to the A Input connector through 10X Attenuator and a Feed-Through Termination. Set the repetition rate to approximately 1 kHz. Set the HI AMPLITUDE-FAST RISE switch to HI AMPLITUDE.

b. Set the 7D15 A and B COUPL switches to DC.

~~b, Select SOURCE Input A~~

c. Set the Vertical Plug-In sensitivity to 20 mV/division and adjust the Square-Wave Generator output amplitude to obtain a vertical display of five divisions. Obtain a triggered display with a sweep rate of approximately 0.5 ms.

d. Adjust R131 to obtain the best front corner.

e. Move the 10X Probe to test point 41 (see Figure 5-1).

C.A. move Input Signal to A chan.

f. Adjust R31 for the best front corner.

G. DO NOT REMOVE 10X PROBE - LEAVE @ CONNECTED FOR STEP 4.

√4. ATTENUATOR ACCURACY (CHECK)

a. Set Vertical Plug-In sensitivity control to 5 mV.

~~Connect 7D15 out Put to Vert. Plugin Unit~~

b. Insert two 10X attenuators between the output of the Square-Wave Generator and the 7D15 input.

c. With the Channel P-P SENS control set to .1 V, set the Square-Wave Generator amplitude to obtain a five-division display. ON TEST POINT TP41 FOR CH A TP 141 FOR CH B

d. Remove one 10X attenuator and set the P-P SENS control to 1 V.

e. Check for a display of five divisions, ±0.25 division.

f. Remove the 10X attenuator and set the P-P SENS control to 10 V.

g. Check for a display of five divisions, ±0.25 division.

h. Move the 10X Probe to test point 141. Repeat steps b through g. using B P-P Sens Control.

i. Disconnect Square-Wave Generator; leave 10X Probe connected for step 5.

TABLE 5-2

Channel B Compensation

Set 7D15 Ch B P-P SENS	Adjust Pulse Generator Amplitude for[2]	Adjust for Best Flat Waveform[3]	Long Term Rolloff and Spiking
.1 V	4 div		±0.32 div
1 V	*4 div	C112, C113	±0.32 div
10 V	**4 div	C109, C110	±0.32 div

*Remove one 10X attenuator.

**Both 10X attenuators removed.

TABLE 5-3

Channel A Compensation

Set 7D15 Ch A P-P SENS	Adjust Pulse Generator Amplitude for[2]	Adjust for Best Flat Waveform[3]	Long Term Rolloff and Spiking
.1 V	4 div		±0.32 div
1 V	*4 div	C12, C13	±0.32 div
10 V	**4 div	C9, C10	±0.32 div

*Remove one 10X attenuator.

**Both 10X attenuators removed.

[2]It may be necessary to remove the 50 Ω termination to obtain a five-division display. Reinsert Feed-Through Termination after check.

[3]See Figure 5-1 for location of adjustment.

5. INPUT COMPENSATION (CHECK/ADJUST)

a. Connect the Square-Wave Generator to the FREQ B connector through two 10X attenuators and a Feed-Through Termination and the RC Normalizer. Set SOURCE to INPUT B.

b. Follow the procedures given in Table 5-2 to check or adjust the Channel B input compensation.

Move probe to TP41

c. Repeat step 5a and use Table 5-3 to check/adjust the Channel A input compensation. Connect the Square-Wave Generator to the Channel A Input. Select SOURCE A

d. Disconnect all test equipment.

√6. TRIGGER RANGE (CHECK)

a. Connect the Vertical Plug-In 10X Probe to test point 286. Set the Vertical Plug-In sensitivity to 50 mV/div.

b. Set the 7D15 A and B P-P SENS to .1 V, A and B COUPL to AC, SOURCE to A INPUT, and MODE to TIM A→B.

c. Connect a 1.0 V p-p 3 MHz sine wave to the Channel A input connector.

d. Check that the display disappears when the B LEVEL control is rotated to its fully clockwise (but not in detent) and fully counterclockwise positions.

e. Move the 10X Probe to test point 430.

f. Check that the display disappears when the A LEVEL control is rotated to its fully clockwise (but not in detent) and fully counterclockwise positions.

g. Disconnect all test equipment.

√7. TRIGGER SLOPE POLARITY (CHECK)

a. Connect a 1 kHz 0.4 V square wave from the Oscilloscope Calibrator to the 7D15 Channel A Input connector and also to the Time Base External Trigger Input. Externally trigger the Time Base.

b. Set the 7D15 to measure the TIM WIDTH A of the Calibrator signal. Set the DISPLAYED WAVEFORM to PSEUDO GATE. Set the Oscilloscope Vertical Mode to Right.

c. Check that the displayed waveform is triggered on the positive slope when the A SLOPE switch is set to +. Check that the display is triggered on the negative slope when the SLOPE switch is set to − (released).

d. Set the 7D15 MODE to FREQ B. Change the DISPLAYED WAVEFORM to CH B.

@

e. Check that the displayed waveform is triggered on the positive slope when the SLOPE switch is set to +. Check that the display is triggered on the negative slope when the SLOPE switch is set to − (released).

f. Disconnect all test equipment.

√8. AC COUPLING (CHECK)

a. Set 7D15 MODE to PERIOD A, AVERG switches to X1, CLOCK to 1 ms and A and B COUPL to AC, and Triggers to Preset.

b. Connect a 5 Hz, 100 mV peak-to-peak signal from the Low-Frequency Sine-Wave Generator to the 7D15 A input.

NOTE

Use the Vertical Plug-In unit to set the amplitude of the Low-Frequency Sine-Wave Generator.

c. Check for a readout display of 0.200 s. Reduce the frequency of the Low-Frequency Sine-Wave Generator to 2 Hz. Press the 7D15 RESET button and check for a readout display of 0.000 s. Set the 7D15 A COUPL switch to DC and check for a readout display of 0.500 s.

d. Move the Low-Frequency Sine-Wave Generator output to the B FREQ input. Set 7D15 MODE to FREQ and TIME to 1 s. B

Select SOURCE Input B

e. Check for a readout display of 0.000 kHz. Set 7D15 COUPL switch to DC and check for a readout of 0.002 kHz. Change the Low-Frequency Sine-Wave Generator frequency to 5 Hz. Change the 7D15 COUPL switch to AC and check for a readout of 0.005 kHz.

f. Disconnect all test equipment.

NOTE

Use the Vertical Plug-In to set the amplitude of the Low-Frequency Sine-Wave Generator.

√9. EXTERNAL CLOCK (CHECK)

a. Connect a 0.8 V peak-to-peak, 20 Hz sine wave from the Low-Frequency Sine-Wave Generator to the 7D15 EXT CLOCK IN connector using one of the cables supplied with the 7D15.

b. Connect the 7D15 CLOCK OUT to the Vertical Plug-In using one of the cables supplied with the 7D15 and a 50 Ω Feed-Through Termination.

c. Set the Vertical Plug-In coupling to DC and sensitivity to .5 V/div. Set the Oscilloscope Vertical Mode to left.

d. Set the 7D15 INTERNAL/EXTERNAL switch (located on right side of plug-in, see Figure 5-1) to EXT. Set the GATE switch to NORM and the CLOCK to 10 μs.

e. Check that the 20 Hz waveform displayed on the crt is referenced to 0 V and has an amplitude of approximately 0.5 V.

f. Disconnect all test equipment and return the INTERNAL/EXTERNAL switch to INT.

10. PHASE LOCK VOLTAGE (CHECK/ADJUST)

a. Connect the DVM between test point 641 and ground. See Figure 5-1 for location of test point 641.

b. Check that the voltage reading is within 2.2 to 2.9 V.

c. Adjust the spacing of coil L641 to obtain a reading of 2.6 V ±.4 V.

d. Disconnect all test equipment.

√11. PERIOD A ACCURACY (CHECK)

a. Connect 10 ns markers from the Time Mark Generator to the 7D15 Channel A connector through a Feed-Through Termination.

b. Set the 7D15 MODE switches to PERIOD A, the AVERG switches to 1000, and the CLOCK to 10 ns. Set A TRIGGER controls for proper triggering and GATE to NORM.

c. Check for a display readout of 10.00 ns ±1 count. .1 %

d. Disconnect all test equipment.

@

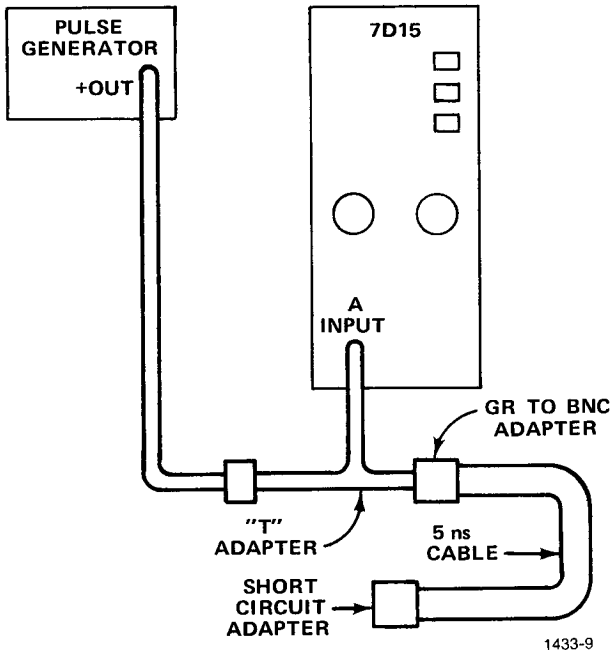

Fig. 5-3. Equipment setup used to check TIM WIDTH A accuracy.

√12. TIM WIDTH A AND TIME A→B ACCURACY (CHECK)

a. Connect the positve-going output of the Pulse Generator to the Vertical Plug-In through a Feed-Through Termination. Adjust the amplitude of the Pulse Generator for a peak-to-peak amplitude of 500 mV.

b. Remove the Feed-Through Termination from the cable and connect as shown in Figure 5-3.

c. Set the 7D15 controls as follows:

MODE	TIM WIDTH A
AVERG	1000
CLOCK	10 ns
SLOPE (A and B)	+ (in)
COUPL (A and B)	AC (in)
SOURCE	INPUT B (in)
P-P SENS (A and B)	.1 V

d. Connect the DVM between the A TRIG LEVEL jack and ground. Use the A LEVEL control to adjust for +0.250 V.

e. Check for a display readout of 10.00 ns +1 ns.

f. Connect equipment as shown in Figure 5-4 using the 10 ns cable.

g. Set the 7D15 A and B LEVEL controls to PRESET and the MODE switch to TIM A→B.

h. Check for a readout display of ~~10.00~~ 5.00 ns ±1 ns.

i. Disconnect all test equipment.

@

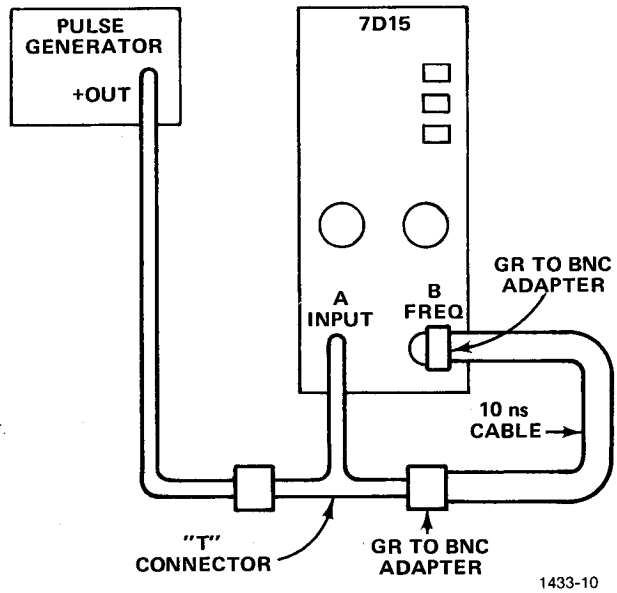

Fig. 5-4. Equipment setup used to check TIM A→B accuracy.

NOTE

Use the Vertical Plug-In unit to set the output amplitude of the Sine-Wave Generator.

√13. INPUT TRIGGER SENSITIVITY (CHECK)

a. Connect a 225 MHz, 150 mV peak-to-peak signal from the Sine-Wave Generator to the 7D15 B FREQ IN connector through a Feed-Through Termination.

b. Set the 7D15 MODE switch to FREQ B, the TIME switches to 10 ms and SOURCE to INPUT B.

c. Check that the 7D15 can be triggered and that the displayed readout is 225 MHz.

d. Change the Sine-Wave Generator frequency to 100 MHz and move the output to the A input.

e. Set the 7D15 MODE to PERIOD A, the AVERG switches to 1000, and the CLOCK to 10 ns.

f. Check that the 7D15 can be triggered and the displayed readout is 10 ns.

g. Disconnect all test equipment.

√14. INTERNAL TRIGGER SOURCE (CHECK)

a. Remove the 7D15 Plug-In from the Flexible Extender and plug it directly into the A Horizontal compartment of the oscilloscope mainframe. Set the Channel A and B P-P SENS controls to TRIG SOURCE.

b. Connect a 100 MHz sine wave from the Sine-Wave Generator to the Vertical Plug-In through a Feed-Through Termination and obtain a crt display of 0.5 division.

c. Check that the 7D15 can be triggered and that the displayed readout is approximately 10 ns.

d. Change the Sine-Wave Generator frequency to 225 MHz and obtain a crt display of 0.5 division.

e. Change the 7D15 MODE to FREQ B and the TIME to 10 ms.

f. Check that the 7D15 can be triggered and that the displayed readout is approximately 225 MHz.

g. Disconnect all test equipment.

√15. A AND B ARM (CHECK)

a. Set 7D15 A and B P-P SENS to .1 V.

b. Connect the Sine-Wave Generator to the 7D15 B FREQ connector and note a displayed readout of approximately 225 MHz.

c. Connect the +4 V dc level from the Oscilloscope Calibrator to the 7D15 B ARM. Use one of the cables supplied with the 7D15.

d. Check that the displayed readout is zero.

e. Move the Sine-Wave Generator to the A input. Change the frequency control of the Sine-Wave Generator to 100 MHz.

f. Set the 7D15 MODE to PERIOD A, AVERG to 1000, and CLOCK to 10 ns. Note a readout display of approximatley 10 ns.

g. Connect a 0.2 V dc level from the Oscilloscope Calibrator to the 7D15 A ARM. Use one of the cables supplied with the 7D15 and a Feed-Through Termination and connect it to the A ARM connector.

h. Check that the readout display turns to zero after the RESET button is pressed.

i. Disconnect all test equipment.

16. CLOCK (CHECK/ADJUST)

a. Connect the National Bureau of Standards Frequency Standard (NBSFS) WWV to 7D15 B FREQ connector.

b. Set the 7D15 MODE to FREQ B and the TIME to 5 ms.

c. Check for a displayed readout of from 999.9995 kHz to 1000.0005 kHz. If not within these tolerances, follow the adjustment procedure starting with d.

d. Connect the NBSFS WWV signal to the Time Base Plug-In External input. Externally trigger the Time Base. Set the sweep rate to 0.1 μs per division.

e. Connect the 7D15 CLOCK OUT to the Vertical Plug-In input connector using one of the cables supplied with the 7D15 and a Feed-Through Termination. Set the Vertical Plug-In sensitivity to 0.1 V per division.

f. Connect one-second markers from the Time Mark Generator to the External Z-Axis input of the oscilloscope.

NOTE

The displayed waveform will drift slowly to the left or right. This represents a positive (+) or negative (−) clock error. A drift to the left represents a + error and a drift to the right represents a − error. With a Time Base sweep of 0,1 μs per division, a drift of one division per second (blinks of the CRT or Z-Axis blinks) equals a clock error of 0.1 Hz. The 5 MHz oscillator in the 7D15 has a frequency error to which it should be set. This frequency error is printed on the oscillator. The relation of "clock error" to "frequency error" is equal to the formula: frequency error/5 = clock error. For example: a frequency error of −1.5 Hz is marked on the 7D15 oscillator. This represents a clock error of −1.5/5 or 0.3 Hz. The oscillator frequency, therefore, should be adjusted for a drift of three divisions per second. Since the error is negative, the drift should be to the right.

g. Calculate the clock error from the frequency error printed on the 7D15 oscillator. See Figure 5-1 for location.

h. Adjust the clock frequency to obtain the proper drift for the clock error calculated in step g. Be sure the drift is in the proper direction.

NOTE

Some oscillators use a metal cover screw. Replacing this screw will change the oscillator frequency. Check for correct error frequency with screw in place.

i. Repeat steps a, b and c.

j. Disconnect all test equipment.

This completes the calibration for the 7D15.

@

REPLACEABLE ELECTRICAL PARTS

PARTS ORDERING INFORMATION

Replacement parts are available from or through your local Tektronix, Inc. Field Office or representative.

Changes to Tektronix instruments are sometimes made to accommodate improved components as they become available, and to give you the benefit of the latest circuit improvements developed in our engineering department. It is therefore important, when ordering parts, to include the following information in your order: Part number, instrument type or number, serial number, and modification number if applicable.

If a part you have ordered has been replaced with a new or improved part, your local Tektronix, Inc. Field Office or representative will contact you concerning any change in part number.

Change information, if any, is located at the rear of this manual.

SPECIAL NOTES AND SYMBOLS

X000	Part first added at this serial number
00X	Part removed after this serial number

ITEM NAME

In the Parts List, an Item Name is separated from the description by a colon (:). Because of space limitations, an Item Name may sometimes appear as incomplete. For further Item Name identification, the U.S. Federal Cataloging Handbook H6-1 can be utilized where possible.

ABBREVIATIONS

ACTR	ACTUATOR	PLSTC	PLASTIC
ASSY	ASSEMBLY	QTZ	QUARTZ
CAP	CAPACITOR	RECP	RECEPTACLE
CER	CERAMIC	RES	RESISTOR
CKT	CIRCUIT	RF	RADIO FREQUENCY
COMP	COMPOSITION	SEL	SELECTED
CONN	CONNECTOR	SEMICOND	SEMICONDUCTOR
ELCTLT	ELECTROLYTIC	SENS	SENSITIVE
ELEC	ELECTRICAL	VAR	VARIABLE
INCAND	INCANDESCENT	WW	WIREWOUND
LED	LIGHT EMITTING DIODE	XFMR	TRANSFORMER
NONWIR	NON WIREWOUND	XTAL	CRYSTAL

CROSS INDEX MFR. CODE NUMBER TO MANUFACTURER

MFR.CODE	MANUFACTURER	ADDRESS	CITY,STATE,ZIP
01121	Allen-Bradley Co.	1201 2nd St. South	Milwaukee, WI 53204
01295	Texas Instruments, Inc., Semiconductor Group	P. O. Box 5012	Dallas, TX 75222
02735	RCA Corp., Solid State Division	Route 202	Somerville, NY 08876
03508	General Electric Co., Semi-Conductor Products Dept.	Electronics Park	Syracuse, NY 13201
04713	Motorola, Inc., Semiconductor Products Div.	5005 E. McDowell Rd.	Phoenix, AZ 85036
07263	Fairchild Semiconductor, A Div. of Fairchild Camera and Instrument Corp.	464 Ellis St.	Mountain View, CA 94042
07910	Teledyne Semiconductor	12515 Chadron Ave.	Hawthorne, CA 90250
08806	General Electric Co., Miniature Lamp Products Dept.	Nela Pk.	Cleveland, OH 44112
09353	C and K Components, Inc.	103 Morse Street	Watertown, MA 02172
12040	National Semiconductor Corp.	Commerce Drive	Danbury, CT 06810
12954	Dickson Electronics Corp.	8700 E. Thomas Rd.	Scottsdale, AZ 85252
13715	Fairchild Semiconductor, A Div. of Fairchild Camera and Instrument Corp.	4300 Redwood Hwy.	San Rafael, CA 94903
14433	ITT Semiconductors, A Div. of International Telephone and Telegraph Corp.	3301 Electronics Way	West Palm Beach, FL 33401
14936	General Instrument Corp., Semiconductor Products Group	600 W. John St.	Hicksville, NY 11802
18324	Signetics Corp.	811 E. Arques	Sunnyvale, CA 94086
22229	Solitron Devices, Inc., Diodes, Integrated Circuits and CMOS	8808 Balboa Ave.	San Diego, CA 92123
24931	Specialty Connector Co., Inc.	3560 Madison Ave.	Indianapolis, IN 46227
25403	Amperex Electronic Corp., Semiconductor and Microcircuits Div.	Providence Pike	Slatersville, RI 02876
28480	Hewlett-Packard Co., Corporate Hq.	1501 Page Mill Rd.	Palo Alto, CA 94304
56289	Sprague Electric Co.		North Adams, MA 01247
71400	Bussman Mfg., Division of McGraw-Edison Co.	2536 W. University St.	St. Louis, MO 63107
72982	Erie Technological Products, Inc.	644 W. 12th St.	Erie, PA 16512
74868	Bunker Ramo Corp., The Amphenol RF Div.	33 E. Franklin St.	Danbury, CT 06810
75042	TRW Electronic Components, IRC Fixed Resistors, Philadelphia Division	401 N. Broad St.	Philadelphia, PA 19108
80009	Tektronix, Inc.	P. O. Box 500	Beaverton, OR 97077
80294	Bourns, Inc., Instrument Div.	6135 Magnolia Ave.	Riverside, CA 92506
81073	Grayhill, Inc.	561 Hillgrove Ave.	La Grange, IL 60525
90201	Mallory Capacitor Co., Div. of P. R. Mallory Co., Inc.	3029 E. Washington St.	Indianapolis, IN 46206
91637	Dale Electronics, Inc.	P. O. Box 609	Columbus, NB 68601
94091	Nippon Communcation Equipment Co.		Kawasaki, Kanagawa, Japan
98291	Sealectro Corp.	225 Hoyt	Mamaroneck, NY 10544
99942	Centralab Semiconductor, Centralab Electronics, Div. of Globe-Union, Inc.	4501 N. Arden Dr.	El Monte, CA 91734

Ckt No.	Tektronix Part No.	Serial/Model No. Eff	Dscont	Name & Description	Mfr Code	Mfr Part Number
A1	670-2169-00			CKT BOARD ASSY:--GATE	80009	670-2169-00
A2	670-2171-00			CKT BOARD ASSY:--MODE	80009	670-2171-00
A3	670-2172-00			CKT BOARD ASSY:--AVERAGE	80009	670-2172-00
A4	670-2170-00			CKT BOARD ASSY:--CLOCK	80009	670-2170-00
A5	670-2168-00			CKT BOARD ASSY:--ATTENUATOR	80009	670-2168-00
A6	670-2165-00	B010100	B059999	CKT BOARD ASSY:--INTERFACE	80009	670-2165-00
A6	670-2165-01	B060000		CKT BOARD ASSY:--INTERFACE	80009	670-2165-01
A7	670-2167-00			CKT BOARD ASSY:--TIME BASE AND LOGIC	80009	670-2167-00
A8	670-2166-00			CKT BOARD ASSY:--POWER SUPPLY	80009	670-2166-00
C2	283-0076-00			CAP.,FXD,CER DI:27PF,10%,500V	56289	40C287A2
C4	283-0076-00			CAP.,FXD,CER DI:27PF,10%,500V	56289	40C287A2
C5	283-0187-00			CAP.,FXD,CER DI:0.047UF,10%,400V	72982	8131N401X5R473K
C9, C10	307-1014-00	B010100	B029999	ATTENUATOR,FXD:100X	80009	307-1014-00
C9, C10	307-1014-01	B030000		ATTENUATOR,FXD:100X	80009	307-1014-01
C12, C13	307-1013-00	B010100	B029999	ATTENUATOR,FXD:10X	80009	307-1013-00
C12, C13	307-1013-01	B030000		ATTENUATOR,FXD:10X	80009	307-1013-01
C18	283-0000-00			CAP.,FXD,CER DI:0.001UF,+100-0%,500V	72982	831-516E102P
C25	283-0000-00			CAP.,FXD,CER DI:0.001UF,+100-0%,500V	72982	831-516E102P
C27	290-0136-00			CAP.,FXD,ELCTLT:2.2UF,20%,20V	56289	162D225X0020CD2
C33	283-0076-00			CAP.,FXD,CER DI:27PF,10%,500V	56289	40C287A2
C34	281-0662-00			CAP.,FXD,CER DI:10PF,+/-0.5PF,500V	72982	301-000H3M0100D
C36	283-0003-00			CAP.,FXD,CER DI:0.01UF,+80-20%,150V	72982	855-547E103Z
C38	281-0542-00			CAP.,FXD,CER DI:18PF,10%,500V	72982	301-002C0G0180K
C40	290-0177-00			CAP.,FXD,ELCTLT:1UF,20%,50V	90201	TAE105M050AS
C43	283-0060-00			CAP.,FXD,CER DI:100PF,5%,200V	72982	855-535U2J101J
C51	283-0003-00			CAP.,FXD,CER DI:0.01UF,+80-20%,150V	72982	855-547E103Z
C65	283-0003-00			CAP.,FXD,CER DI:0.01UF,+80-20%,150V	72982	855-547E103Z
C69	283-0003-00			CAP.,FXD,CER DI:0.01UF,+80-20%,150V	72982	855-547E103Z
C74	281-0604-00			CAP.,FXD,CER DI:2.2PF,+/-0.25PF,500V	72982	301-000C0J0229C
C81	281-0604-00			CAP.,FXD,CER DI:2.2PF,+/-0.25PF,500V	72982	301-000C0J0229C
C102	283-0076-00			CAP.,FXD,CER DI:27PF,10%,500V	56289	40C287A2
C105	283-0187-00			CAP.,FXD,CER DI:0.047UF,10%,400V	72982	8131N401X5R473K
C109, C110	307-1014-00	B010100	B029999	ATTENUATOR,FXD:100X	80009	307-1014-00
C109, C110	307-1014-01	B030000		ATTENUATOR,FXD:100X	80009	307-1014-01
C112, C113	307-1013-00	B010100	B029999	ATTENUATOR,FXD:10X	80009	307-1013-00
C112, C113	307-1013-01	B030000		ATTENUATOR,FXD:10X	80009	307-1013-01
C118	283-0000-00			CAP.,FXD,CER DI:0.001UF,+100-0%,500V	72982	831-516E102P
C125	283-0000-00			CAP.,FXD,CER DI:0.001UF,+100-0%,500V	72982	831-516E102P
C127	290-0136-00			CAP.,FXD,ELCTLT:2.2UF,20%,20V	56289	162D225X0020CD2
C133	283-0076-00			CAP.,FXD,CER DI:27PF,10%,500V	56289	40C287A2
C134	281-0662-00			CAP.,FXD,CER DI:10PF,+/-0.5PF,500V	72982	301-000H3M0100D
C136	283-0003-00			CAP.,FXD,CER DI:0.01UF,+80-20%,150V	72982	855-547E103Z
C138	281-0542-00			CAP.,FXD,CER DI:18PF,10%,500V	72982	301-002C0G0180K
C140	290-0177-00			CAP.,FXD,ELCTLT:1UF,20%,50V	90201	TAE105M050AS
C143	283-0060-00			CAP.,FXD,CER DI:100PF,5%,200V	72982	855-535U2J101J
C151	283-0003-00			CAP.,FXD,CER DI:0.01UF,+80-20%,150V	72982	855-547E103Z

Ckt No.	Tektronix Part No.	Serial/Model No. Eff	Dscont	Name & Description	Mfr Code	Mfr Part Number
C160	283-0003-00			CAP.,FXD,CER DI:0.01UF,+80-20%,150V	72982	855-547E103Z
C163	283-0003-00			CAP.,FXD,CER DI:0.01UF,+80-20%,150V	72982	855-547E103Z
C169	283-0003-00			CAP.,FXD,CER DI:0.01UF,+80-20%,150V	72982	855-547E103Z
C174	281-0604-00			CAP.,FXD,CER DI:2.2PF,+/-0.25PF,500V	72982	301-000C0J0229C
C181	281-0604-00			CAP.,FXD,CER DI:2.2PF,+/-0.25PF,500V	72982	301-000C0J0229C
C191	283-0003-00			CAP.,FXD,CER DI:0.01UF,+80-20%,150V	72982	855-547E103Z
C192	290-0527-00			CAP.,FXD,ELCTLT:15UF,20%,20V	90201	TDC156M020FL
C205	281-0617-00			CAP.,FXD,CER DI:15PF,10%,200V	72982	374-001C0G0150K
C208	290-0530-00			CAP.,FXD,ELCTLT:68UF,20%,6V	90201	TDC686M006FL
C213	281-0617-00			CAP.,FXD,CER DI:15PF,10%,200V	72982	374-001C0G0150K
C215	283-0003-00			CAP.,FXD,CER DI:0.01UF,+80-20%,150V	72982	855-547E103Z
C216	281-0662-00			CAP.,FXD,CER DI:10PF,+/-0.5PF,500V	72982	301-000H3M0100D
C219	283-0111-00			CAP.,FXD,CER DI:0.1UF,20%,50V	72982	8131N075651104M
C255	290-0573-00			CAP.,FXD,ELCTLT:2.7UF,20%,50V	56289	196D275X0050JA1
C261	283-0003-00			CAP.,FXD,CER DI:0.01UF,+80-20%,150V	72982	855-547E103Z
C263	283-0003-00			CAP.,FXD,CER DI:0.01UF,+80-20%,150V	72982	855-547E103Z
C273	283-0000-00			CAP.,FXD,CER DI:0.001UF,+100-0%,500V	72982	831-516E102P
C284	283-0023-00			CAP.,FXD,CER DI:0.1UF,+80-20%,10V	56289	20C374
C285	283-0076-00			CAP.,FXD,CER DI:27PF,10%,500V	56289	40C287A2
C310	283-0000-00			CAP.,FXD,CER DI:0.001UF,+100-0%,500V	72982	831-516E102P
C313	283-0003-00			CAP.,FXD,CER DI:0.01UF,+80-20%,150V	72982	855-547E103Z
C316	281-0700-00			CAP.,FXD,CER DI:3.3PF,10%,200V	72982	374-001S3B0339K
C322	283-0003-00			CAP.,FXD,CER DI:0.01UF,+80-20%,150V	72982	855-547E103Z
C323	283-0000-00			CAP.,FXD,CER DI:0.001UF,+100-0%,500V	72982	831-516E102P
C330	283-0023-00			CAP.,FXD,CER DI:0.1UF,+80-20%,10V	56289	20C374
C334	283-0023-00			CAP.,FXD,CER DI:0.1UF,+80-20%,10V	56289	20C374
C336	281-0700-00			CAP.,FXD,CER DI:3.3PF,10%,200V	72982	374-001S3B0339K
C428	283-0076-00			CAP.,FXD,CER DI:27PF,10%,500V	56289	40C287A2
C443	283-0000-00			CAP.,FXD,CER DI:0.001UF,+100-0%,500V	72982	831-516E102P
C456	283-0003-00			CAP.,FXD,CER DI:0.01UF,+80-20%,150V	72982	855-547E103Z
C472	281-0617-00			CAP.,FXD,CER DI:15PF,10%,200V	72982	374-001C0G0150K
C479	283-0088-00			CAP.,FXD,CER DI:1000PF,5%,500V	56289	20C285
C481	283-0003-00			CAP.,FXD,CER DI:0.01UF,+80-20%,150V	72982	855-547E103Z
C484	283-0023-00			CAP.,FXD,CER DI:0.1UF,+80-20%,10V	56289	20C374
C491	283-0060-00			CAP.,FXD,CER DI:100PF,5%,200V	72982	855-535U2J101J
C516	283-0003-00			CAP.,FXD,CER DI:0.01UF,+80-20%,150V	72982	855-547E103Z
C532	283-0095-00			CAP.,FXD,CER DI:56PF,10%,200V	72982	855-535A560K
C533	283-0000-00			CAP.,FXD,CER DI:0.001UF,+100-0%,500V	72982	831-516E102P
C577	283-0003-00			CAP.,FXD,CER DI:0.01UF,+80-20%,150V	72982	855-547E103Z
C581	283-0028-00			CAP.,FXD,CER DI:0.0022UF,20%,50V	56289	19C606
C602	283-0060-00			CAP.,FXD,CER DI:100PF,5%,200V	72982	855-535U2J101J
C603	283-0212-00			CAP.,FXD,CER DI:2UF,20%,50V	72982	8141050651205M
C617	283-0000-00			CAP.,FXD,CER DI:0.001UF,+100-0%,500V	72982	831-516E102P
C637	283-0003-00			CAP.,FXD,CER DI:0.01UF,+80-20%,150V	72982	855-547E103Z
C638	281-0524-00			CAP.,FXD,CER DI:150PF,+/-30PF,500V	72982	301-000X5U0151M
C640	283-0003-00			CAP.,FXD,CER DI:0.01UF,+80-20%,150V	72982	855-547E103Z
C641	283-0000-00			CAP.,FXD,CER DI:0.001UF,+100-0%,500V	72982	831-516E102P
C644	283-0003-00			CAP.,FXD,CER DI:0.01UF,+80-20%,150V	72982	855-547E103Z
C688	283-0076-00			CAP.,FXD,CER DI:27PF,10%,500V	56289	40C287A2
C696	283-0003-00	XB010125		CAP.,FXD,CER DI:0.01UF,+80-20%,150V	72982	855-547E103Z
C720	283-0003-00			CAP.,FXD,CER DI:0.01UF,+80-20%,150V	72982	855-547E103Z
C728	283-0003-00			CAP.,FXD,CER DI:0.01UF,+80-20%,150V	72982	855-547E103Z
C732	283-0003-00			CAP.,FXD,CER DI:0.01UF,+80-20%,150V	72982	855-547E103Z
C735	283-0003-00			CAP.,FXD,CER DI:0.01UF,+80-20%,150V	72982	855-547E103Z
C741	283-0003-00			CAP.,FXD,CER DI:0.01UF,+80-20%,150V	72982	855-547E103Z

Ckt No.	Tektronix Part No.	Serial/Model No. Eff	Dscont	Name & Description	Mfr Code	Mfr Part Number
C746	281-0525-00			CAP.,FXD,CER DI:470PF,+/-94PF,500V	72982	301-000X5U0471M
C750	283-0076-00			CAP.,FXD,CER DI:27PF,10%,500V	56289	40C287A2
C753	283-0076-00			CAP.,FXD,CER DI:27PF,10%,500V	56289	40C287A2
C755	283-0000-00			CAP.,FXD,CER DI:0.001UF,+100-0%,500V	72982	831-516E102P
C757	283-0000-00			CAP.,FXD,CER DI:0.001UF,+100-0%,500V	72982	831-516E102P
C761	283-0000-00			CAP.,FXD,CER DI:0.001UF,+100-0%,500V	72982	831-516E102P
C764	283-0000-00			CAP.,FXD,CER DI:0.001UF,+100-0%,500V	72982	831-516E102P
C775	283-0000-00			CAP.,FXD,CER DI:0.001UF,+100-0%,500V	72982	831-516E102P
C779	283-0076-00			CAP.,FXD,CER DI:27PF,10%,500V	56289	40C287A2
C801	283-0023-00			CAP.,FXD,CER DI:0.1UF,+80-20%,10V	56289	20C374
C890	283-0003-00			CAP.,FXD,CER DI:0.01UF,+80-20%,150V	72982	855-547E103Z
C931	290-0527-00			CAP.,FXD,ELCTLT:15UF,20%,20V	90201	TDC156M020FL
C932	290-0527-00			CAP.,FXD,ELCTLT:15UF,20%,20V	90201	TDC156M020FL
C933	283-0003-00			CAP.,FXD,CER DI:0.01UF,+80-20%,150V	72982	855-547E103Z
C936	290-0530-00			CAP.,FXD,ELCTLT:68UF,20%,6V	90201	TDC686M006FL
C939	290-0527-00			CAP.,FXD,ELCTLT:15UF,20%,20V	90201	TDC156M020FL
C940	290-0530-00			CAP.,FXD,ELCTLT:68UF,20%,6V	90201	TDC686M006FL
C941	290-0534-00			CAP.,FXD,ELCTLT:1UF,20%,35V	56289	196D105X0035HA1
C944	290-0532-00			CAP.,FXD,ELCTLT:150UF,20%,6V	90201	TDC157M006CL
C945	283-0003-00			CAP.,FXD,CER DI:0.01UF,+80-20%,150V	72982	855-547E103Z
C947	283-0003-00			CAP.,FXD,CER DI:0.01UF,+80-20%,150V	72982	855-547E103Z
C948	290-0530-00			CAP.,FXD,ELCTLT:68UF,20%,6V	90201	TDC686M006FL
C950	290-0530-00			CAP.,FXD,ELCTLT:68UF,20%,6V	90201	TDC686M006FL
C951	290-0530-00			CAP.,FXD,ELCTLT:68UF,20%,6V	90201	TDC686M006FL
C954	290-0534-00			CAP.,FXD,ELCTLT:1UF,20%,35V	56289	196D105X0035HA1
C980	290-0248-01			CAP.,FXD,ELCTLT:150UF,20%,15V	56289	150D157X0015S2
C981	283-0177-00			CAP.,FXD,CER DI:1UF,+80-20%,25V	72982	8131N0396511O5Z
C992	283-0128-00			CAP.,FXD,CER DI:100PF,5%,500V	72982	871-536T2H101J
C995	290-0139-00			CAP.,FXD,ELCTLT:180UF,20%,6V	06751	TS3K6-187
C996	290-0530-00			CAP.,FXD,ELCTLT:68UF,20%,6V	90201	TDC686M006FL
C997	283-0198-00			CAP.,FXD,CER DI:0.22UF,20%,50V	72982	8131N075651224M
CR20	152-0153-00			SEMICOND DEVICE:SILICON,15V,50MA	13715	FD7003
CR21	152-0246-00			SEMICOND DEVICE:SILICON,400PIV,200MA	07910	CD12676
CR22	152-0246-00			SEMICOND DEVICE:SILICON,400PIV,200MA	07910	CD12676
CR23	152-0153-00			SEMICOND DEVICE:SILICON,15V,50MA	13715	FD7003
CR120	152-0153-00			SEMICOND DEVICE:SILICON,15V,50MA	13715	FD7003
CR121	152-0246-00			SEMICOND DEVICE:SILICON,400PIV,200MA	07910	CD12676
CR122	152-0246-00			SEMICOND DEVICE:SILICON,400PIV,200MA	07910	CD12676
CR123	152-0153-00			SEMICOND DEVICE:SILICON,15V,50MA	13715	FD7003
CR167	152-0141-02			SEMICOND DEVICE:SILICON,30V,150MA	07910	1N4152
CR168	152-0141-02			SEMICOND DEVICE:SILICON,30V,150MA	07910	1N4152
CR169	152-0141-02			SEMICOND DEVICE:SILICON,30V,150MA	07910	1N4152
CR203	152-0141-02			SEMICOND DEVICE:SILICON,30V,150MA	07910	1N4152
CR233	152-0075-00			SEMICOND DEVICE:GE,25V,40MA	14936	GD238
CR234	152-0075-00			SEMICOND DEVICE:GE,25V,40MA	14936	GD238
CR235	150-1004-00			LAMP,LED:RED,2.5V,15MA	08806	SSL-12
CR251	152-0141-02			SEMICOND DEVICE:SILICON,30V,150MA	07910	1N4152
CR262	152-0075-00			SEMICOND DEVICE:GE,25V,40MA	14936	GD238
CR275	152-0141-02			SEMICOND DEVICE:SILICON,30V,150MA	07910	1N4152
CR306	152-0141-02			SEMICOND DEVICE:SILICON,30V,150MA	07910	1N4152
CR322	152-0075-00			SEMICOND DEVICE:GE,25V,40MA	14936	GD238
CR328	152-0141-02	XB060000		SEMICOND DEVICE:SILICON,30V,150MA	07910	1N4152
CR353	152-0141-02	XB030000		SEMICOND DEVICE:SILICON,30V,150MA	07910	1N4152
CR372	152-0141-02			SEMICOND DEVICE:SILICON,30V,150MA	07910	1N4152

Ckt No.	Tektronix Part No.	Serial/Model No. Eff	Dscont	Name & Description	Mfr Code	Mfr Part Number
CR445	152-0141-02			SEMICOND DEVICE:SILICON,30V,150MA	07910	1N4152
CR448	152-0141-02			SEMICOND DEVICE:SILICON,30V,150MA	07910	1N4152
CR459	152-0141-02			SEMICOND DEVICE:SILICON,30V,150MA	07910	1N4152
CR467	152-0141-02			SEMICOND DEVICE:SILICON,30V,150MA	07910	1N4152
CR472	152-0141-02			SEMICOND DEVICE:SILICON,30V,150MA	07910	1N4152
CR483	152-0141-02			SEMICOND DEVICE:SILICON,30V,150MA	07910	1N4152
CR516	152-0075-00			SEMICOND DEVICE:GE,25V,40MA	14936	GD238
CR529	152-0141-02			SEMICOND DEVICE:SILICON,30V,150MA	07910	1N4152
CR531	152-0075-00			SEMICOND DEVICE:GE,25V,40MA	14936	GD238
CR603	152-0141-02			SEMICOND DEVICE:SILICON,30V,150MA	07910	1N4152
CR604	152-0141-02			SEMICOND DEVICE:SILICON,30V,150MA	07910	1N4152
CR619	152-0071-00			SEMICOND DEVICE:GERMANIUM,15V,40MA	14433	G865
CR641	152-0269-00			SEMICOND DEVICE:SILICON,VAR VCAP.,4V,33PF	25403	1N3182
CR656	152-0141-02			SEMICOND DEVICE:SILICON,30V,150MA	07910	1N4152
CR697	152-0141-02			SEMICOND DEVICE:SILICON,30V,150MA	07910	1N4152
CR703	152-0071-00			SEMICOND DEVICE:GERMANIUM,15V,40MA	14433	G865
CR729	152-0141-02			SEMICOND DEVICE:SILICON,30V,150MA	07910	1N4152
CR730	152-0141-02			SEMICOND DEVICE:SILICON,30V,150MA	07910	1N4152
CR741	152-0322-00			SEMICOND DEVICE:SILICON,15V	28480	5082-2672
CR757	152-0322-00			SEMICOND DEVICE:SILICON,15V	28480	5082-2672
CR761	152-0322-00			SEMICOND DEVICE:SILICON,15V	28480	5082-2672
CR762	152-0141-02	XB050000		SEMICOND DEVICE:SILICON,30V,150MA	07910	1N4152
CR766	152-0141-02			SEMICOND DEVICE:SILICON,30V,150MA	07910	1N4152
CR767	152-0141-02			SEMICOND DEVICE:SILICON,30V,150MA	07910	1N4152
CR768	152-0141-02			SEMICOND DEVICE:SILICON,30V,150MA	07910	1N4152
CR769	152-0141-02			SEMICOND DEVICE:SILICON,30V,150MA	07910	1N4152
CR771	152-0141-02			SEMICOND DEVICE:SILICON,30V,150MA	07910	1N4152
CR775	152-0141-02	XB050000		SEMICOND DEVICE:SILICON,30V,150MA	07910	1N4152
CR776	152-0141-02			SEMICOND DEVICE:SILICON,30V,150MA	07910	1N4152
CR777	152-0141-02	XB050000		SEMICOND DEVICE:SILICON,30V,150MA	07910	1N4152
CR779	152-0141-02			SEMICOND DEVICE:SILICON,30V,150MA	07910	1N4152
CR795	152-0141-02			SEMICOND DEVICE:SILICON,30V,150MA	07910	1N4152
CR796	152-0141-02			SEMICOND DEVICE:SILICON,30V,150MA	07910	1N4152
CR797	152-0141-02			SEMICOND DEVICE:SILICON,30V,150MA	07910	1N4152
CR802	152-0141-02			SEMICOND DEVICE:SILICON,30V,150MA	07910	1N4152
CR805	152-0141-02			SEMICOND DEVICE:SILICON,30V,150MA	07910	1N4152
CR823	152-0141-02			SEMICOND DEVICE:SILICON,30V,150MA	07910	1N4152
CR824	152-0141-02			SEMICOND DEVICE:SILICON,30V,150MA	07910	1N4152
CR825	152-0141-02			SEMICOND DEVICE:SILICON,30V,150MA	07910	1N4152
CR826	152-0141-02			SEMICOND DEVICE:SILICON,30V,150MA	07910	1N4152
CR827	152-0141-02			SEMICOND DEVICE:SILICON,30V,150MA	07910	1N4152
CR828	152-0141-02			SEMICOND DEVICE:SILICON,30V,150MA	07910	1N4152
CR829	152-0141-02			SEMICOND DEVICE:SILICON,30V,150MA	07910	1N4152
CR830	152-0141-02			SEMICOND DEVICE:SILICON,30V,150MA	07910	1N4152
CR837	152-0141-02			SEMICOND DEVICE:SILICON,30V,150MA	07910	1N4152
CR838	152-0141-02			SEMICOND DEVICE:SILICON,30V,150MA	07910	1N4152
CR845	152-0141-02			SEMICOND DEVICE:SILICON,30V,150MA	07910	1N4152
CR846	152-0141-02			SEMICOND DEVICE:SILICON,30V,150MA	07910	1N4152
CR853	152-0141-02			SEMICOND DEVICE:SILICON,30V,150MA	07910	1N4152
CR854	152-0141-02			SEMICOND DEVICE:SILICON,30V,150MA	07910	1N4152
CR859	152-0141-02			SEMICOND DEVICE:SILICON,30V,150MA	07910	1N4152
CR860	152-0141-02			SEMICOND DEVICE:SILICON,30V,150MA	07910	1N4152
CR861	152-0141-02			SEMICOND DEVICE:SILICON,30V,150MA	07910	1N4152
CR862	152-0141-02			SEMICOND DEVICE:SILICON,30V,150MA	07910	1N4152
CR864	152-0071-00			SEMICOND DEVICE:GERMANIUM,15V,40MA	14433	G865

Ckt No.	Tektronix Part No.	Serial/Model No. Eff	Dscont	Name & Description	Mfr Code	Mfr Part Number
CR865	152-0141-02			SEMICOND DEVICE:SILICON,30V,150MA	07910	1N4152
CR866	152-0141-02			SEMICOND DEVICE:SILICON,30V,150MA	07910	1N4152
CR867	152-0141-02			SEMICOND DEVICE:SILICON,30V,150MA	07910	1N4152
CR868	152-0141-02			SEMICOND DEVICE:SILICON,30V,150MA	07910	1N4152
CR869	152-0141-02			SEMICOND DEVICE:SILICON,30V,150MA	07910	1N4152
CR870	152-0141-02			SEMICOND DEVICE:SILICON,30V,150MA	07910	1N4152
CR871	152-0141-02			SEMICOND DEVICE:SILICON,30V,150MA	07910	1N4152
CR873	152-0141-02			SEMICOND DEVICE:SILICON,30V,150MA	07910	1N4152
CR874	152-0141-02			SEMICOND DEVICE:SILICON,30V,150MA	07910	1N4152
CR875	152-0141-02			SEMICOND DEVICE:SILICON,30V,150MA	07910	1N4152
CR876	152-0141-02			SEMICOND DEVICE:SILICON,30V,150MA	07910	1N4152
CR878	152-0141-02			SEMICOND DEVICE:SILICON,30V,150MA	07910	1N4152
CR879	152-0141-02			SEMICOND DEVICE:SILICON,30V,150MA	07910	1N4152
CR880	152-0141-02			SEMICOND DEVICE:SILICON,30V,150MA	07910	1N4152
CR881	152-0141-02			SEMICOND DEVICE:SILICON,30V,150MA	07910	1N4152
CR884	152-0141-02			SEMICOND DEVICE:SILICON,30V,150MA	07910	1N4152
CR888	152-0141-02			SEMICOND DEVICE:SILICON,30V,150MA	07910	1N4152
CR890	152-0322-00			SEMICOND DEVICE:SILICON,15V	28480	5082-2672
CR897	152-0141-02			SEMICOND DEVICE:SILICON,30V,150MA	07910	1N4152
CR898	152-0322-00			SEMICOND DEVICE:SILICON,15V	28480	5082-2672
CR900	152-0141-02			SEMICOND DEVICE:SILICON,30V,150MA	07910	1N4152
CR902	152-0141-02			SEMICOND DEVICE:SILICON,30V,150MA	07910	1N4152
CR904	152-0141-02			SEMICOND DEVICE:SILICON,30V,150MA	07910	1N4152
CR905	152-0141-02			SEMICOND DEVICE:SILICON,30V,150MA	07910	1N4152
CR906	152-0141-02			SEMICOND DEVICE:SILICON,30V,150MA	07910	1N4152
CR908	152-0141-02			SEMICOND DEVICE:SILICON,30V,150MA	07910	1N4152
CR909	152-0141-02			SEMICOND DEVICE:SILICON,30V,150MA	07910	1N4152
CR911	152-0141-02			SEMICOND DEVICE:SILICON,30V,150MA	07910	1N4152
CR912	152-0141-02			SEMICOND DEVICE:SILICON,30V,150MA	07910	1N4152
CR914	152-0141-02			SEMICOND DEVICE:SILICON,30V,150MA	07910	1N4152
CR916	152-0141-02			SEMICOND DEVICE:SILICON,30V,150MA	07910	1N4152
CR917	152-0141-02			SEMICOND DEVICE:SILICON,30V,150MA	07910	1N4152
CR918	152-0141-02			SEMICOND DEVICE:SILICON,30V,150MA	07910	1N4152
CR920	152-0141-02			SEMICOND DEVICE:SILICON,30V,150MA	07910	1N4152
CR921	152-0141-02			SEMICOND DEVICE:SILICON,30V,150MA	07910	1N4152
DS221	150-0048-01			LAMP,INCAND:NO.683,SELECTED	80009	150-0048-01
DS223	150-0048-01			LAMP,INCAND:NO.683,SELECTED	80009	150-0048-01
DS599	150-0048-01			LAMP,INCAND:NO.683,SELECTED	80009	150-0048-01
DS699	150-0048-01			LAMP,INCAND:NO.683,SELECTED	80009	150-0048-01
F980	159-0042-00			FUSE,CARTRIDGE:3AG,0.75A,250V,FAST-BLOW	71400	AGC3-4
J1	131-0955-00			CONNECTOR,RCPT,:BNC,FEMALE	24931	28JR200-1
J101	131-0955-00			CONNECTOR,RCPT,:BNC,FEMALE	24931	28JR200-1
J270	131-0372-00			CONNECTOR,RCPT,:COAXIAL	98291	51-043-4300
J323	131-1003-00			CONNECTOR BODY,:CKT BD MT,3 PRONG	80009	131-1003-00
J325	131-1315-00			CONNECTOR,RCPT,:BNC,FEMALE	80009	131-1315-00
J440	131-0372-00			CONNECTOR,RCPT,:COAXIAL	98291	51-043-4300
J470	131-0372-00			CONNECTOR,RCPT,:COAXIAL	98291	51-043-4300
J601	131-0156-00			CONNECTOR,RCPT,:COAXIAL	74868	27-3
J696	131-1003-00			CONNECTOR BODY,:CKT BD MT,3 PRONG	80009	131-1003-00
J697	131-0156-00			CONNECTOR,RCPT,:COAXIAL	74868	27-3
L39	108-0433-00			COIL,RF:0.09UH	80009	108-0433-00
L41	108-0440-00			COIL,RF:8UH,TOROIDAL INDUCTOR	80009	108-0440-00
L69	108-0420-00			COIL,RF:60NH	80009	108-0420-00
L139	108-0433-00			COIL,RF:0.09UH	80009	108-0433-00

Ckt No.	Tektronix Part No.	Serial/Model No. Eff	Dscont	Name & Description	Mfr Code	Mfr Part Number
L141	108-0440-00			COIL,RF:8UH,TOROIDAL INDUCTOR	80009	108-0440-00
L169	108-0420-00			COIL,RF:60NH	80009	108-0420-00
L203	276-0569-00			CORE,TOROID:	80009	276-0569-00
L213	276-0569-00			CORE,TOROID:	80009	276-0569-00
L283	108-0420-00			COIL,RF:60NH	80009	108-0420-00
L286	276-0569-00			CORE,TOROID:	80009	276-0569-00
L430	276-0569-00			CORE,TOROID:	80009	276-0569-00
L432	108-0420-00			COIL,RF:60NH	80009	108-0420-00
L641	108-0420-00			COIL,RF:60NH	80009	108-0420-00
L980	108-0473-00			COIL,RF:150UH	80009	108-0473-00
L996	108-0337-00			COIL,RF:25UH	80009	108-0337-00
LR215	108-0333-00			COIL,RF:0.9UH	80009	108-0333-00
LR491	108-0333-00			COIL,RF:0.9UH	80009	108-0333-00
LR532	108-0333-00			COIL,RF:0.9UH	80009	108-0333-00
LR931	108-0537-00			COIL,RF:200UH	80009	108-0537-00
LR936	108-0537-00			COIL,RF:200UH	80009	108-0537-00
LR939	108-0537-00			COIL,RF:200UH	80009	108-0537-00
LR944	108-0537-00			COIL,RF:200UH	80009	108-0537-00
Q25	151-1025-00			TRANSISTOR:SILICON,JFE,N-CHANNEL	01295	SBA8129
Q32	151-0402-00			TRANSISTOR:SILICON,NPN,SEL FROM 3571TP	01295	SKA6814
Q38	151-0271-00			TRANSISTOR:SILICON,PNP	01295	SKA4504
Q60	151-0206-00			TRANSISTOR:SILICON,NPN	94091	2SC288A
Q65	151-0206-00			TRANSISTOR:SILICON,NPN	94091	2SC288A
Q72	151-0402-00			TRANSISTOR:SILICON,NPN,SEL FROM 3571TP	01295	SKA6814
Q74	151-0402-00			TRANSISTOR:SILICON,NPN,SEL FROM 3571TP	01295	SKA6814
Q79	151-0402-00			TRANSISTOR:SILICON,NPN,SEL FROM 3571TP	01295	SKA6814
Q81	151-0402-00			TRANSISTOR:SILICON,NPN,SEL FROM 3571TP	01295	SKA6814
Q87	151-0190-00			TRANSISTOR:SILICON,NPN	04713	2N3904
Q125	151-1025-00			TRANSISTOR:SILICON,JFE,N-CHANNEL	01295	SBA8129
Q132	151-0402-00			TRANSISTOR:SILICON,NPN,SEL FROM 3571TP	01295	SKA6814
Q138	151-0271-00			TRANSISTOR:SILICON,PNP	01295	SKA4504
Q160	151-0206-00			TRANSISTOR:SILICON,NPN	94091	2SC288A
Q165	151-0206-00			TRANSISTOR:SILICON,NPN	94091	2SC288A
Q172	151-0402-00			TRANSISTOR:SILICON,NPN,SEL FROM 3571TP	01295	SKA6814
Q174	151-0402-00			TRANSISTOR:SILICON,NPN,SEL FROM 3571TP	01295	SKA6814
Q179	151-0402-00			TRANSISTOR:SILICON,NPN,SEL FROM 3571TP	01295	SKA6814
Q181	151-0402-00			TRANSISTOR:SILICON,NPN,SEL FROM 3571TP	01295	SKA6814
Q187	151-0190-00			TRANSISTOR:SILICON,NPN	04713	2N3904
Q203	151-0402-00			TRANSISTOR:SILICON,NPN,SEL FROM 3571TP	01295	SKA6814
Q213	151-0402-00			TRANSISTOR:SILICON,NPN,SEL FROM 3571TP	01295	SKA6814
Q217	151-0271-00			TRANSISTOR:SILICON,PNP	01295	SKA4504
Q227	151-0254-00			TRANSISTOR:SILICON,NPN	03508	2N5308
Q253	151-0190-00			TRANSISTOR:SILICON,NPN	04713	2N3904
Q258	151-0510-00			TRANSISTOR:SILICON,UNIJUNCTION	04713	2N4852
Q275	151-0220-00			TRANSISTOR:SILICON,PNP	80009	151-0220-00
Q277	151-0220-00			TRANSISTOR:SILICON,PNP	80009	151-0220-00
Q285	151-0402-00			TRANSISTOR:SILICON,NPN,SEL FROM 3571TP	01295	SKA6814
Q303	151-0188-00			TRANSISTOR:SILICON,PNP	04713	2N3906
Q312	151-0190-00			TRANSISTOR:SILICON,NPN	04713	2N3904
Q316	151-0282-00			TRANSISTOR:SILICON,NPN	02735	2N5179
Q319	151-0282-00			TRANSISTOR:SILICON,NPN	02735	2N5179
Q330	151-0190-01	XB060000		TRANSISTOR:SILICON,NPN	07910	TE23652
Q332	151-0188-00			TRANSISTOR:SILICON,PNP	04713	2N3906

Ckt No.	Tektronix Part No.	Serial/Model No. Eff	Dscont	Name & Description	Mfr Code	Mfr Part Number
Q336	151-0282-00			TRANSISTOR:SILICON,NPN	02735	2N5179
Q339	151-0282-00			TRANSISTOR:SILICON,NPN	02735	2N5179
Q354	151-0188-00			TRANSISTOR:SILICON,PNP	04713	2N3906
Q367	151-0301-00			TRANSISTOR:SILICON,PNP	04713	2N2907A
Q369	151-0225-00			TRANSISTOR:SILICON,NPN	07910	CS23365
Q375	151-0188-00			TRANSISTOR:SILICON,PNP	04713	2N3906
Q393	151-0301-00			TRANSISTOR:SILICON,PNP	04713	2N2907A
Q424	151-0188-00			TRANSISTOR:SILICON,PNP	04713	2N3906
Q427	151-0188-00			TRANSISTOR:SILICON,PNP	04713	2N3906
Q429	151-0402-00			TRANSISTOR:SILICON,NPN,SEL FROM 3571TP	01295	SKA6814
Q445	151-0220-00			TRANSISTOR:SILICON,PNP	80009	151-0220-00
Q447	151-0220-00			TRANSISTOR:SILICON,PNP	80009	151-0220-00
Q459	151-0188-00			TRANSISTOR:SILICON,PNP	04713	2N3906
Q467	151-0188-00			TRANSISTOR:SILICON,PNP	04713	2N3906
Q475	151-0190-00			TRANSISTOR:SILICON,NPN	04713	2N3904
Q490	151-0190-00			TRANSISTOR:SILICON,NPN	04713	2N3904
Q509	151-0225-00			TRANSISTOR:SILICON,NPN	07910	CS23365
Q512	151-0225-00			TRANSISTOR:SILICON,NPN	07910	CS23365
Q529	151-0188-00			TRANSISTOR:SILICON,PNP	04713	2N3906
Q551	151-0190-00			TRANSISTOR:SILICON,NPN	04713	2N3904
Q571	151-0282-00			TRANSISTOR:SILICON,NPN	02735	2N5179
Q574	151-0225-00			TRANSISTOR:SILICON,NPN	07910	CS23365
Q584	151-0190-00			TRANSISTOR:SILICON,NPN	04713	2N3904
Q592	151-0190-00			TRANSISTOR:SILICON,NPN	04713	2N3904
Q606	151-0192-00			TRANSISTOR:SILICON,NPN,SEL FROM MPS6521	80009	151-0192-00
Q614	151-0190-00			TRANSISTOR:SILICON,NPN	04713	2N3904
Q620	151-0190-00			TRANSISTOR:SILICON,NPN	04713	2N3904
Q633A,B	151-1054-00			TRANSISTOR:SILICON,JFE,N-CHANNEL,DUAL	22229	FD1644
Q655	151-0220-00			TRANSISTOR:SILICON,PNP	80009	151-0220-00
Q660	151-0225-00			TRANSISTOR:SILICON,NPN	07910	CS23365
Q687	151-0301-00			TRANSISTOR:SILICON,PNP	04713	2N2907A
Q689	151-0221-00			TRANSISTOR:SILICON,PNP	07263	S24849
Q691	151-0221-00			TRANSISTOR:SILICON,PNP	07263	S24849
Q694	151-0367-00			TRANSISTOR:SILICON,NPN,SEL FROM 3571TP	80009	151-0367-00
Q696	151-0367-00			TRANSISTOR:SILICON,NPN,SEL FROM 3571TP	80009	151-0367-00
Q701	151-0220-00			TRANSISTOR:SILICON,PNP	80009	151-0220-00
Q703	151-0225-00			TRANSISTOR:SILICON,NPN	07910	CS23365
Q705	151-0225-00			TRANSISTOR:SILICON,NPN	07910	CS23365
Q709	151-0302-00			TRANSISTOR:SILICON,NPN	04713	2N2222A
Q711	151-0302-00			TRANSISTOR:SILICON,NPN	04713	2N2222A
Q713	151-0302-00			TRANSISTOR:SILICON,NPN	04713	2N2222A
Q715	151-0302-00			TRANSISTOR:SILICON,NPN	04713	2N2222A
Q717	151-0302-00			TRANSISTOR:SILICON,NPN	04713	2N2222A
Q719	151-0302-00			TRANSISTOR:SILICON,NPN	04713	2N2222A
Q748	151-0190-00			TRANSISTOR:SILICON,NPN	04713	2N3904
Q773	151-0190-00			TRANSISTOR:SILICON,NPN	04713	2N3904
Q775	151-0192-00	XB020000		TRANSISTOR:SILICON,NPN,SEL FROM MPS6521	80009	151-0192-00
Q778	151-0190-00			TRANSISTOR:SILICON,NPN	04713	2N3904
Q782	151-0190-00			TRANSISTOR:SILICON,NPN	04713	2N3904
Q788	151-0190-00			TRANSISTOR:SILICON,NPN	04713	2N3904
Q794	151-0190-00			TRANSISTOR:SILICON,NPN	04713	2N3904
Q803	151-0301-00			TRANSISTOR:SILICON,PNP	04713	2N2907A
Q815	151-0190-00			TRANSISTOR:SILICON,NPN	04713	2N3904
Q817	151-0190-00			TRANSISTOR:SILICON,NPN	04713	2N3904
Q819	151-0190-00			TRANSISTOR:SILICON,NPN	04713	2N3904

Ckt No.	Tektronix Part No.	Serial/Model No. Eff	Dscont	Name & Description	Mfr Code	Mfr Part Number
Q821	151-0190-00			TRANSISTOR:SILICON,NPN	04713	2N3904
Q823	151-0190-00			TRANSISTOR:SILICON,NPN	04713	2N3904
Q825	151-0190-00			TRANSISTOR:SILICON,NPN	04713	2N3904
Q827	151-0190-00			TRANSISTOR:SILICON,NPN	04713	2N3904
Q829	151-0190-00			TRANSISTOR:SILICON,NPN	04713	2N3904
Q831	151-0190-00			TRANSISTOR:SILICON,NPN	04713	2N3904
Q833	151-0190-00			TRANSISTOR:SILICON,NPN	04713	2N3904
Q835	151-0190-00			TRANSISTOR:SILICON,NPN	04713	2N3904
Q837	151-0190-00			TRANSISTOR:SILICON,NPN	04713	2N3904
Q839	151-0190-00			TRANSISTOR:SILICON,NPN	04713	2N3904
Q841	151-0190-00			TRANSISTOR:SILICON,NPN	04713	2N3904
Q843	151-0190-00			TRANSISTOR:SILICON,NPN	04713	2N3904
Q845	151-0190-00			TRANSISTOR:SILICON,NPN	04713	2N3904
Q847	151-0190-00			TRANSISTOR:SILICON,NPN	04713	2N3904
Q849	151-0190-00			TRANSISTOR:SILICON,NPN	04713	2N3904
Q851	151-0190-00			TRANSISTOR:SILICON,NPN	04713	2N3904
Q853	151-0190-00			TRANSISTOR:SILICON,NPN	04713	2N3904
Q855	151-0190-00			TRANSISTOR:SILICON,NPN	04713	2N3904
Q857	151-0190-00			TRANSISTOR:SILICON,NPN	04713	2N3904
Q859	151-0190-00			TRANSISTOR:SILICON,NPN	04713	2N3904
Q861	151-0190-00			TRANSISTOR:SILICON,NPN	04713	2N3904
Q866	151-0190-00			TRANSISTOR:SILICON,NPN	04713	2N3904
Q869	151-0190-00			TRANSISTOR:SILICON,NPN	04713	2N3904
Q870	151-0190-00			TRANSISTOR:SILICON,NPN	04713	2N3904
Q874	151-0190-00			TRANSISTOR:SILICON,NPN	04713	2N3904
Q875	151-0190-00			TRANSISTOR:SILICON,NPN	04713	2N3904
Q879	151-0190-00			TRANSISTOR:SILICON,NPN	04713	2N3904
Q880	151-0190-00			TRANSISTOR:SILICON,NPN	04713	2N3904
Q884	151-0190-00			TRANSISTOR:SILICON,NPN	04713	2N3904
Q896	151-0190-00			TRANSISTOR:SILICON,NPN	04713	2N3904
Q980	151-0352-00			TRANSISTOR:SILICON,NPN	03508	X44C282
Q982	151-0302-00			TRANSISTOR:SILICON,NPN	04713	2N2222A
Q984	151-0220-00			TRANSISTOR:SILICON,PNP	80009	151-0220-00
Q986	151-0220-00			TRANSISTOR:SILICON,PNP	80009	151-0220-00
Q993	151-0352-00			TRANSISTOR:SILICON,NPN	03508	X44C282
R2	315-0180-00			RES.,FXD,COMP:18 OHM,5%,0.25W	01121	CB1805
R4	315-0180-00			RES.,FXD,COMP:18 OHM,5%,0.25W	01121	CB1805
R6	317-0102-00			RES.,FXD,COMP:1K OHM,5%,0125W	01121	BB1025
R7	317-0102-00			RES.,FXD,COMP:1K OHM,5%,0125W	01121	BB1025
R15	315-0100-00			RES.,FXD,COMP:10 OHM,5%,0.25W	01121	CB1005
R17	321-0481-00			RES.,FXD,FILM:1M OHM,1%,0.125W	75042	CEAT0-1004F
R18	315-0274-00			RES.,FXD,COMP:270K OHM,5%,0.25W	01121	CB2745
R25	315-0101-00			RES.,FXD,COMP:100 OHM,5%,0.25W	01121	CB1015
R26	315-0302-00			RES.,FXD,COMP:3K OHM,5%,0.25W	01121	CB3025
R28	315-0752-00			RES.,FXD,COMP:7.5K OHM,5%,0.25W	01121	CB7525
R29	315-0102-00			RES.,FXD,COMP:1K OHM,5%,0.25W	01121	CB1025
R31	311-1244-00			RES.,VAR,NONWIR:100 OHM,10%,0.50W	80294	3386X-T07-101
R32	315-0121-00			RES.,FXD,COMP:120 OHM,5%,0.25W	01121	CB1215
R33	315-0430-00			RES.,FXD,COMP:43 OHM,5%,0.25W	01121	CB4305
R34	315-0101-00			RES.,FXD,COMP:100 OHM,5%,0.25W	01121	CB1015
R38	315-0510-00			RES.,FXD,COMP:51 OHM,5%,0.25W	01121	CB5105
R39	315-0181-00			RES.,FXD,COMP:180 OHM,5%,0.25W	01121	CB1815
R42	315-0332-00			RES.,FXD,COMP:3.3K OHM,5%,0.25W	01121	CB3325
R44	315-0273-00			RES.,FXD,COMP:27K OHM,5%,0.25W	01121	CB2735
R45	321-0347-00			RES.,FXD,FILM:40.2K OHM,1%,0.125W	75042	CEAT0-4022F

Ckt No.	Tektronix Part No.	Serial/Model No. Eff	Dscont	Name & Description	Mfr Code	Mfr Part Number
R47	321-0309-00			RES.,FXD,FILM:16.2K OHM,1%,0.125W	75042	CEAT0-1622F
R48	315-0684-00			RES.,FXD,COMP:680K OHM,5%,0.25W	01121	CB6845
R49	311-1235-00			RES.,VAR,NONWIR:100K OHM,20%,0.50W	80294	3389F-P31-104
R51	321-0384-00			RES.,FXD,FILM:97.6K OHM,1%,0.125W	75042	CEAT0-9762F
R52	321-0193-00			RES.,FXD,FILM:1K OHM,1%,0.125W	75042	CEAT0-1001F
R53	321-0281-00			RES.,FXD,FILM:8.25K OHM,1%,0.125W	75042	CEAT0-8251F
R55	315-0163-00			RES.,FXD,COMP:16K OHM,5%,0.25W	01121	CB1635
R57[1]	311-0468-00			RES.,VAR,NONWIR:100K OHM,20%,0.50W	01121	GS-6588C
R60	315-0821-00			RES.,FXD,COMP:820 OHM,5%,0.25W	01121	CB8215
R62	315-0101-00			RES.,FXD,COMP:100 OHM,5%,0.25W	01121	CB1015
R63	321-0162-00			RES.,FXD,FILM:475 OHM,1%,0.125W	75042	CEAT0-4750F
R65	315-0821-00			RES.,FXD,COMP:820 OHM,5%,0.25W	01121	CB8215
R67	315-0510-00			RES.,FXD,COMP:51 OHM,5%,0.25W	01121	CB5105
R69	315-0510-00			RES.,FXD,COMP:51 OHM,5%,0.25W	01121	CB5105
R71	315-0200-00			RES.,FXD,COMP:20 OHM,5%,0.25W	01121	CB2005
R73	315-0102-00			RES.,FXD,COMP:1K OHM,5%,0.25W	01121	CB1025
R75	315-0162-00			RES.,FXD,COMP:1.6K OHM,5%,0.25W	01121	CB1625
R76	315-0111-00			RES.,FXD,COMP:110 OHM,5%,0.25W	01121	CB1115
R78	315-0200-00			RES.,FXD,COMP:20 OHM,5%,0.25W	01121	CB2005
R80	315-0102-00			RES.,FXD,COMP:1K OHM,5%,0.25W	01121	CB1025
R82	315-0162-00			RES.,FXD,COMP:1.6K OHM,5%,0.25W	01121	CB1625
R83	315-0111-00			RES.,FXD,COMP:110 OHM,5%,0.25W	01121	CB1115
R87	315-0563-00			RES.,FXD,COMP:56K OHM,5%,0.25W	01121	CB5635
R89	315-0153-00			RES.,FXD,COMP:15K OHM,5%,0.25W	01121	CB1535
R102	315-0180-00			RES.,FXD,COMP:18 OHM,5%,0.25W	01121	CB1805
R106	317-0102-00			RES.,FXD,COMP:1K OHM,5%,0125W	01121	BB1025
R107	317-0102-00			RES.,FXD,COMP:1K OHM,5%,0125W	01121	BB1025
R115	315-0100-00			RES.,FXD,COMP:10 OHM,5%,0.25W	01121	CB1005
R117	321-0481-00			RES.,FXD,FILM:1M OHM,1%,0.125W	75042	CEAT0-1004F
R118	315-0274-00			RES.,FXD,COMP:270K OHM,5%,0.25W	01121	CB2745
R125	315-0101-00			RES.,FXD,COMP:100 OHM,5%,0.25W	01121	CB1015
R126	315-0302-00			RES.,FXD,COMP:3K OHM,5%,0.25W	01121	CB3025
R128	315-0752-00			RES.,FXD,COMP:7.5K OHM,5%,0.25W	01121	CB7525
R129	315-0102-00			RES.,FXD,COMP:1K OHM,5%,0.25W	01121	CB1025
R131	311-1244-00			RES.,VAR,NONWIR:100 OHM,10%,0.50W	80294	3386X-T07-101
R132	315-0121-00			RES.,FXD,COMP:120 OHM,5%,0.25W	01121	CB1215
R133	315-0430-00			RES.,FXD,COMP:43 OHM,5%,0.25W	01121	CB4305
R134	315-0101-00			RES.,FXD,COMP:100 OHM,5%,0.25W	01121	CB1015
R138	315-0510-00			RES.,FXD,COMP:51 OHM,5%,0.25W	01121	CB5105
R139	315-0181-00			RES.,FXD,COMP:180 OHM,5%,0.25W	01121	CB1815
R142	315-0332-00			RES.,FXD,COMP:3.3K OHM,5%,0.25W	01121	CB3325
R144	315-0273-00			RES.,FXD,COMP:27K OHM,5%,0.25W	01121	CB2735
R145	321-0347-00			RES.,FXD,FILM:40.2K OHM,1%,0.125W	75042	CEAT0-4022F
R147	321-0309-00			RES.,FXD,FILM:16.2K OHM,1%,0.125W	75042	CEAT0-1622F
R148	315-0684-00			RES.,FXD,COMP:680K OHM,5%,0.25W	01121	CB6845
R149	311-1235-00			RES.,VAR,NONWIR:100K OHM,20%,0.50W	80294	3389F-P31-104
R151	321-0384-00			RES.,FXD,FILM:97.6K OHM,1%,0.125W	75042	CEAT0-9762F
R152	321-0193-00			RES.,FXD,FILM:1K OHM,1%,0.125W	75042	CEAT0-1001F
R153	321-0281-00			RES.,FXD,FILM:8.25K OHM,1%,0.125W	75042	CEAT0-8251F
R155	315-0163-00			RES.,FXD,COMP:16K OHM,5%,0.25W	01121	CB1635
R157[2]	311-0468-00			RES.,VAR,NONWIR:100K OHM,20%,0.50W	01121	GS-6588C
R160	315-0821-00			RES.,FXD,COMP:820 OHM,5%,0.25W	01121	CB8215
R162	315-0101-00			RES.,FXD,COMP:100 OHM,5%,0.25W	01121	CB1015
R163	321-0162-00			RES.,FXD,FILM:475 OHM,1%,0.125W	75042	CEAT0-4750F
R165	301-0821-00			RES.,FXD,COMP:820 OHM,5%,0.50W	01121	EB8215

[1]Furnished as a unit with S57.
[2]Furnished as a unit with S157.

Ckt No.	Tektronix Part No.	Serial/Model No. Eff	Dscont	Name & Description	Mfr Code	Mfr Part Number
R167	315-0510-00			RES.,FXD,COMP:51 OHM,5%,0.25W	01121	CB5105
R169	315-0510-00			RES.,FXD,COMP:51 OHM,5%,0.25W	01121	CB5105
R171	315-0200-00			RES.,FXD,COMP:20 OHM,5%,0.25W	01121	CB2005
R173	315-0102-00	B010100	B010124	RES.,FXD,COMP:1K OHM,5%,0.25W	01121	CB1025
R173	315-0911-00	B010125		RES.,FXD,COMP:910 OHM,5%,0.25W	01121	CB9115
R175	315-0162-00			RES.,FXD,COMP:1.6K OHM,5%,0.25W	01121	CB1625
R176	315-0111-00			RES.,FXD,COMP:110 OHM,5%,0.25W	01121	CB1115
R178	315-0200-00			RES.,FXD,COMP:20 OHM,5%,0.25W	01121	CB2005
R180	315-0102-00			RES.,FXD,COMP:1K OHM,5%,0.25W	01121	CB1025
R182	315-0162-00			RES.,FXD,COMP:1.6K OHM,5%,0.25W	01121	CB1625
R183	315-0111-00			RES.,FXD,COMP:110 OHM,5%,0.25W	01121	CB1115
R187	315-0563-00			RES.,FXD,COMP:56K OHM,5%,0.25W	01121	CB5635
R189	315-0153-00			RES.,FXD,COMP:15K OHM,5%,0.25W	01121	CB1535
R201	315-0510-00			RES.,FXD,COMP:51 OHM,5%,0.25W	01121	CB5105
R203	321-0114-00			RES.,FXD,FILM:150 OHM,1%,0.125W	75042	CEAT0-1500F
R205	315-0750-00			RES.,FXD,COMP:75 OHM,5%,0.25W	01121	CB7505
R207	315-0821-00			RES.,FXD,COMP:820 OHM,5%,0.25W	01121	CB8215
R208	315-0330-00			RES.,FXD,COMP:33 OHM,5%,0.25W	01121	CB3305
R209	315-0821-00			RES.,FXD,COMP:820 OHM,5%,0.25W	01121	CB8215
R211	315-0510-00			RES.,FXD,COMP:51 OHM,5%,0.25W	01121	CB5105
R214	315-0100-00			RES.,FXD,COMP:10 OHM,5%,0.25W	01121	CB1005
R216	321-0034-00			RES.,FXD,FILM:22.1 OHM,1%,0.125W	75042	CEAT0-22R10F
R218	321-0069-00			RES.,FXD,FILM:51.1 OHM,1%,0.125W	75042	CEAT0-51R10F
R225	315-0223-00			RES.,FXD,COMP:22K OHM,5%,0.25W	01121	CB2235
R229	315-0622-00			RES.,FXD,COMP:6.2K OHM,5%,0.25W	01121	CB6225
R240	315-0223-00			RES.,FXD,COMP:22K OHM,5%,0.25W	01121	CB2235
R242	315-0223-00			RES.,FXD,COMP:22K OHM,5%,0.25W	01121	CB2235
R243	315-0511-00			RES.,FXD,COMP:510 OHM,5%,0.25W	01121	CB5115
R245	315-0223-00			RES.,FXD,COMP:22K OHM,5%,0.25W	01121	CB2235
R247	315-0223-00			RES.,FXD,COMP:22K OHM,5%,0.25W	01121	CB2235
R250	315-0473-00			RES.,FXD,COMP:47K OHM,5%,0.25W	01121	CB4735
R251	315-0473-00			RES.,FXD,COMP:47K OHM,5%,0.25W	01121	CB4735
R254	315-0331-00			RES.,FXD,COMP:330 OHM,5%,0.25W	01121	CB3315
R255	315-0303-00			RES.,FXD,COMP:30K OHM,5%,0.25W	01121	CB3035
R256	311-1334-00			RES.,VAR,NONWIR:2.5M OHM,20%,1W	01121	11M443
R260	315-0101-00			RES.,FXD,COMP:100 OHM,5%,0.25W	01121	CB1015
R262	315-0201-00			RES.,FXD,COMP:200 OHM,5%,0.25W	01121	CB2015
R263	315-0203-00			RES.,FXD,COMP:20K OHM,5%,0.25W	01121	CB2035
R268	315-0511-00			RES.,FXD,COMP:510 OHM,5%,0.25W	01121	CB5115
R270	315-0101-00			RES.,FXD,COMP:100 OHM,5%,0.25W	01121	CB1015
R271	315-0123-00			RES.,FXD,COMP:12K OHM,5%,0.25W	01121	CB1235
R273	315-0102-00			RES.,FXD,COMP:1K OHM,5%,0.25W	01121	CB1025
R274	315-0473-00			RES.,FXD,COMP:47K OHM,5%,0.25W	01121	CB4735
R275	315-0911-00			RES.,FXD,COMP:910 OHM,5%,0.25W	01121	CB9115
R278	315-0511-00			RES.,FXD,COMP:510 OHM,5%,0.25W	01121	CB5115
R279	315-0751-00			RES.,FXD,COMP:750 OHM,5%,0.25W	01121	CB7515
R283	315-0101-00			RES.,FXD,COMP:100 OHM,5%,0.25W	01121	CB1015
R284	315-0510-00			RES.,FXD,COMP:51 OHM,5%,0.25W	01121	CB5105
R286	315-0391-00	B010100	B010124	RES.,FXD,COMP:390 OHM,5%,0.25W	01121	CB3915
R286	315-0271-00	B010125		RES.,FXD,COMP:270 OHM,5%,0.25W	01121	CB2715
R288	315-0181-00			RES.,FXD,COMP:180 OHM,5%,0.25W	01121	CB1815
R289	315-0271-00			RES.,FXD,COMP:270 OHM,5%,0.25W	01121	CB2715
R291	315-0331-00			RES.,FXD,COMP:330 OHM,5%,0.25W	01121	CB3315
R293	315-0331-00			RES.,FXD,COMP:330 OHM,5%,0.25W	01121	CB3315
R296	315-0511-00			RES.,FXD,COMP:510 OHM,5%,0.25W	01121	CB5115

Ckt No.	Tektronix Part No.	Serial/Model No. Eff	Dscont	Name & Description	Mfr Code	Mfr Part Number
R301	315-0222-00			RES.,FXD,COMP:2.2K OHM,5%,0.25W	01121	CB2225
R302	315-0473-00			RES.,FXD,COMP:47K OHM,5%,0.25W	01121	CB4735
R304	315-0473-00			RES.,FXD,COMP:47K OHM,5%,0.25W	01121	CB4735
R305	315-0222-00			RES.,FXD,COMP:2.2K OHM,5%,0.25W	01121	CB2225
R310	315-0361-00			RES.,FXD,COMP:360 OHM,5%,0.25W	01121	CB3615
R311	315-0332-00			RES.,FXD,COMP:3.3K OHM,5%,0.25W	01121	CB3325
R313	315-0511-00			RES.,FXD,COMP:510 OHM,5%,0.25W	01121	CB5115
R316	315-0101-00			RES.,FXD,COMP:100 OHM,5%,0.25W	01121	CB1015
R318	315-0271-00			RES.,FXD,COMP:270 OHM,5%,0.25W	01121	CB2715
R319	315-0750-00			RES.,FXD,COMP:75 OHM,5%,0.25W	01121	CB7505
R321	315-0750-00			RES.,FXD,COMP:75 OHM,5%,0.25W	01121	CB7505
R323	315-0431-00			RES.,FXD,COMP:430 OHM,5%,0.25W	01121	CB4315
R328	311-1068-00			RES.,VAR,NONWIR:5K OHM,10%,0.50W	01121	W-7682
R330	315-0101-00	B010100	B059999	RES.,FXD,COMP:100 OHM,5%,0.25W	01121	CB1015
R330	315-0620-00	B060000		RES.,FXD,COMP:62 OHM,5%,0.25W	01121	CB6205
R331	315-0101-00			RES.,FXD,COMP:100 OHM,5%,0.25W	01121	CB1015
R333	315-0511-00			RES.,FXD,COMP:510 OHM,5%,0.25W	01121	CB5115
R336	315-0101-00			RES.,FXD,COMP:100 OHM,5%,0.25W	01121	CB1015
R338	315-0301-00			RES.,FXD,COMP:300 OHM,5%,0.25W	01121	CB3015
R339	315-0750-00			RES.,FXD,COMP:75 OHM,5%,0.25W	01121	CB7505
R340	315-0241-00			RES.,FXD,COMP:240 OHM,5%,0.25W	01121	CB2415
R342	315-0620-00			RES.,FXD,COMP:62 OHM,5%,0.25W	01121	CB6205
R343	315-0620-00			RES.,FXD,COMP:62 OHM,5%,0.25W	01121	CB6205
R344	315-0471-00			RES.,FXD,COMP:470 OHM,5%,0.25W	01121	CB4715
R346	315-0121-00			RES.,FXD,COMP:120 OHM,5%,0.25W	01121	CB1215
R347	315-0471-00			RES.,FXD,COMP:470 OHM,5%,0.25W	01121	CB4715
R348	315-0151-00			RES.,FXD,COMP:150 OHM,5%,0.25W	01121	CB1515
R349	315-0151-00			RES.,FXD,COMP:150 OHM,5%,0.25W	01121	CB1515
R351	315-0103-00			RES.,FXD,COMP:10K OHM,5%,0.25W	01121	CB1035
R353	315-0102-00	B010100	B029999	RES.,FXD,COMP:1K OHM,5%,0.25W	01121	CB1025
R353	315-0182-00	B030000		RES.,FXD,COMP:1.8K OHM,5%,0.25W	01121	CB1825
R355	315-0362-00			RES.,FXD,COMP:3.6K OHM,5%,0.25W	01121	CB3625
R357	315-0102-00			RES.,FXD,COMP:1K OHM,5%,0.25W	01121	CB1025
R358	315-0222-00			RES.,FXD,COMP:2.2K OHM,5%,0.25W	01121	CB2225
R359	315-0302-00			RES.,FXD,COMP:3K OHM,5%,0.25W	01121	CB3025
R361	315-0511-00			RES.,FXD,COMP:510 OHM,5%,0.25W	01121	CB5115
R363	315-0391-00			RES.,FXD,COMP:390 OHM,5%,0.25W	01121	CB3915
R365	315-0103-00			RES.,FXD,COMP:10K OHM,5%,0.25W	01121	CB1035
R369	315-0331-00			RES.,FXD,COMP:330 OHM,5%,0.25W	01121	CB3315
R372	315-0102-00			RES.,FXD,COMP:1K OHM,5%,0.25W	01121	CB1025
R373	315-0472-00			RES.,FXD,COMP:4.7K OHM,5%,0.25W	01121	CB4725
R376	315-0511-00			RES.,FXD,COMP:510 OHM,5%,0.25W	01121	CB5115
R378	315-0750-00			RES.,FXD,COMP:75 OHM,5%,0.25W	01121	CB7505
R379	315-0121-00			RES.,FXD,COMP:120 OHM,5%,0.25W	01121	CB1215
R381	315-0332-00			RES.,FXD,COMP:3.3K OHM,5%,0.25W	01121	CB3325
R382	315-0302-00			RES.,FXD,COMP:3K OHM,5%,0.25W	01121	CB3025
R384	315-0271-00			RES.,FXD,COMP:270 OHM,5%,0.25W	01121	CB2715
R386	315-0621-00			RES.,FXD,COMP:620 OHM,5%,0.25W	01121	CB6215
R387	315-0301-00			RES.,FXD,COMP:300 OHM,5%,0.25W	01121	CB3015
R388	315-0622-00			RES.,FXD,COMP:6.2K OHM,5%,0.25W	01121	CB6225
R389	315-0332-00			RES.,FXD,COMP:3.3K OHM,5%,0.25W	01121	CB3325
R390	315-0302-00			RES.,FXD,COMP:3K OHM,5%,0.25W	01121	CB3025
R391	315-0181-00			RES.,FXD,COMP:180 OHM,5%,0.25W	01121	CB1815
R392	315-0331-00			RES.,FXD,COMP:330 OHM,5%,0.25W	01121	CB3315
R393	315-0102-00			RES.,FXD,COMP:1K OHM,5%,0.25W	01121	CB1025

Ckt No.	Tektronix Part No.	Serial/Model No. Eff	Dscont	Name & Description	Mfr Code	Mfr Part Number
R394	315-0201-00			RES.,FXD,COMP:200 OHM,5%,0.25W	01121	CB2015
R395	315-0511-00			RES.,FXD,COMP:510 OHM,5%,0.25W	01121	CB5115
R396	315-0241-00			RES.,FXD,COMP:240 OHM,5%,0.25W	01121	CB2415
R397	315-0751-00			RES.,FXD,COMP:750 OHM,5%,0.25W	01121	CB7515
R399	315-0391-00			RES.,FXD,COMP:390 OHM,5%,0.25W	01121	CB3915
R403	315-0821-00			RES.,FXD,COMP:820 OHM,5%,0.25W	01121	CB8215
R404	315-0102-00			RES.,FXD,COMP:1K OHM,5%,0.25W	01121	CB1025
R406	315-0271-00			RES.,FXD,COMP:270 OHM,5%,0.25W	01121	CB2715
R407	315-0181-00			RES.,FXD,COMP:180 OHM,5%,0.25W	01121	CB1815
R410	315-0821-00			RES.,FXD,COMP:820 OHM,5%,0.25W	01121	CB8215
R411	315-0102-00			RES.,FXD,COMP:1K OHM,5%,0.25W	01121	CB1025
R413	315-0821-00			RES.,FXD,COMP:820 OHM,5%,0.25W	01121	CB8215
R414	315-0102-00			RES.,FXD,COMP:1K OHM,5%,0.25W	01121	CB1025
R416	315-0511-00			RES.,FXD,COMP:510 OHM,5%,0.25W	01121	CB5115
R417	315-0102-00			RES.,FXD,COMP:1K OHM,5%,0.25W	01121	CB1025
R419	315-0512-00			RES.,FXD,COMP:5.1K OHM,5%,0.25W	01121	CB5125
R422	315-0472-00			RES.,FXD,COMP:4.7K OHM,5%,0.25W	01121	CB4725
R423	315-0103-00			RES.,FXD,COMP:10K OHM,5%,0.25W	01121	CB1035
R425	315-0102-00			RES.,FXD,COMP:1K OHM,5%,0.25W	01121	CB1025
R426	315-0103-00			RES.,FXD,COMP:10K OHM,5%,0.25W	01121	CB1035
R428	315-0510-00			RES.,FXD,COMP:51 OHM,5%,0.25W	01121	CB5105
R430	315-0391-00			RES.,FXD,COMP:390 OHM,5%,0.25W	01121	CB3915
R432	315-0101-00			RES.,FXD,COMP:100 OHM,5%,0.25W	01121	CB1015
R434	315-0271-00			RES.,FXD,COMP:270 OHM,5%,0.25W	01121	CB2715
R436	315-0391-00			RES.,FXD,COMP:390 OHM,5%,0.25W	01121	CB3915
R438	315-0101-00			RES.,FXD,COMP:100 OHM,5%,0.25W	01121	CB1015
R439	315-0151-00			RES.,FXD,COMP:150 OHM,5%,0.25W	01121	CB1515
R440	315-0101-00			RES.,FXD,COMP:100 OHM,5%,0.25W	01121	CB1015
R441	315-0123-00			RES.,FXD,COMP:12K OHM,5%,0.25W	01121	CB1235
R443	315-0102-00			RES.,FXD,COMP:1K OHM,5%,0.25W	01121	CB1025
R444	315-0473-00			RES.,FXD,COMP:47K OHM,5%,0.25W	01121	CB4735
R445	315-0911-00	B010100	B059999	RES.,FXD,COMP:910 OHM,5%,0.25W	01121	CB9115
R445	315-0681-00	B060000		RES.,FXD,COMP:680 OHM,5%,0.25W	01121	CB6815
R448	315-0511-00			RES.,FXD,COMP:510 OHM,5%,0.25W	01121	CB5115
R449	315-0681-00			RES.,FXD,COMP:680 OHM,5%,0.25W	01121	CB6815
R452	315-0302-00			RES.,FXD,COMP:3K OHM,5%,0.25W	01121	CB3025
R453	315-0222-00			RES.,FXD,COMP:2.2K OHM,5%,0.25W	01121	CB2225
R454	315-0102-00			RES.,FXD,COMP:1K OHM,5%,0.25W	01121	CB1025
R456	315-0511-00			RES.,FXD,COMP:510 OHM,5%,0.25W	01121	CB5115
R458	315-0223-00	XB030000		RES.,FXD,COMP:22K OHM,5%,0.25W	01121	CB2235
R459	315-0102-00			RES.,FXD,COMP:1K OHM,5%,0.25W	01121	CB1025
R461	315-0821-00			RES.,FXD,COMP:820 OHM,5%,0.25W	01121	CB8215
R464	315-0821-00			RES.,FXD,COMP:820 OHM,5%,0.25W	01121	CB8215
R467	315-0391-00			RES.,FXD,COMP:390 OHM,5%,0.25W	01121	CB3915
R472	315-0822-00			RES.,FXD,COMP:8.2K OHM,5%,0.25W	01121	CB8225
R473	315-0473-00			RES.,FXD,COMP:47K OHM,5%,0.25W	01121	CB4735
R475	315-0103-00			RES.,FXD,COMP:10K OHM,5%,0.25W	01121	CB1035
R477	315-0223-00			RES.,FXD,COMP:22K OHM,5%,0.25W	01121	CB2235
R481	315-0391-00			RES.,FXD,COMP:390 OHM,5%,0.25W	01121	CB3915
R483	315-0391-00			RES.,FXD,COMP:390 OHM,5%,0.25W	01121	CB3915
R485	315-0470-00			RES.,FXD,COMP:47 OHM,5%,0.25W	01121	CB4705
R488	315-0102-00			RES.,FXD,COMP:1K OHM,5%,0.25W	01121	CB1025
R493	315-0102-00			RES.,FXD,COMP:1K OHM,5%,0.25W	01121	CB1025
R495	315-0271-00			RES.,FXD,COMP:270 OHM,5%,0.25W	01121	CB2715
R497	315-0821-00			RES.,FXD,COMP:820 OHM,5%,0.25W	01121	CB8215

Ckt No.	Tektronix Part No.	Serial/Model No. Eff	Dscont	Name & Description	Mfr Code	Mfr Part Number
R499	315-0821-00			RES.,FXD,COMP:820 OHM,5%,0.25W	01121	CB8215
R501	315-0821-00			RES.,FXD,COMP:820 OHM,5%,0.25W	01121	CB8215
R503	315-0821-00			RES.,FXD,COMP:820 OHM,5%,0.25W	01121	CB8215
R505	315-0102-00			RES.,FXD,COMP:1K OHM,5%,0.25W	01121	CB1025
R507	315-0102-00			RES.,FXD,COMP:1K OHM,5%,0.25W	01121	CB1025
R511	315-0511-00			RES.,FXD,COMP:510 OHM,5%,0.25W	01121	CB5115
R513	315-0122-00			RES.,FXD,COMP:1.2K OHM,5%,0.25W	01121	CB1225
R514	315-0392-00			RES.,FXD,COMP:3.9K OHM,5%,0.25W	01121	CB3925
R516	315-0202-00			RES.,FXD,COMP:2K OHM,5%,0.25W	01121	CB2025
R517	315-0242-00			RES.,FXD,COMP:2.4K OHM,5%,0.25W	01121	CB2425
R523	315-0512-00			RES.,FXD,COMP:5.1K OHM,5%,0.25W	01121	CB5125
R525	315-0223-00			RES.,FXD,COMP:22K OHM,5%,0.25W	01121	CB2235
R528	315-0511-00			RES.,FXD,COMP:510 OHM,5%,0.25W	01121	CB5115
R531	315-0332-00			RES.,FXD,COMP:3.3K OHM,5%,0.25W	01121	CB3325
R534	315-0202-00			RES.,FXD,COMP:2K OHM,5%,0.25W	01121	CB2025
R535	315-0202-00			RES.,FXD,COMP:2K OHM,5%,0.25W	01121	CB2025
R538	315-0302-00			RES.,FXD,COMP:3K OHM,5%,0.25W	01121	CB3025
R539	315-0821-00			RES.,FXD,COMP:820 OHM,5%,0.25W	01121	CB8215
R541	315-0561-00			RES.,FXD,COMP:560 OHM,5%,0.25W	01121	CB5615
R543	321-0251-00			RES.,FXD,FILM:4.02K OHM,1%,0.125W	75042	CEAT0-4021F
R545	315-0821-00			RES.,FXD,COMP:820 OHM,5%,0.25W	01121	CB8215
R547	315-0511-00			RES.,FXD,COMP:510 OHM,5%,0.25W	01121	CB5115
R549	315-0391-00			RES.,FXD,COMP:390 OHM,5%,0.25W	01121	CB3915
R551	315-0362-00			RES.,FXD,COMP:3.6K OHM,5%,0.25W	01121	CB3625
R552	315-0152-00			RES.,FXD,COMP:1.5K OHM,5%,0.25W	01121	CB1525
R554	315-0182-00			RES.,FXD,COMP:1.8K OHM,5%,0.25W	01121	CB1825
R571	315-0102-00			RES.,FXD,COMP:1K OHM,5%,0.25W	01121	CB1025
R573	315-0471-00			RES.,FXD,COMP:470 OHM,5%,0.25W	01121	CB4715
R574	315-0122-00			RES.,FXD,COMP:1.2K OHM,5%,0.25W	01121	CB1225
R575	315-0392-00			RES.,FXD,COMP:3.9K OHM,5%,0.25W	01121	CB3925
R577	315-0102-00			RES.,FXD,COMP:1K OHM,5%,0.25W	01121	CB1025
R579	315-0472-00			RES.,FXD,COMP:4.7K OHM,5%,0.25W	01121	CB4725
R580	315-0472-00			RES.,FXD,COMP:4.7K OHM,5%,0.25W	01121	CB4725
R583	315-0473-00			RES.,FXD,COMP:47K OHM,5%,0.25W	01121	CB4735
R585	315-0822-00			RES.,FXD,COMP:8.2K OHM,5%,0.25W	01121	CB8225
R587	315-0223-00			RES.,FXD,COMP:22K OHM,5%,0.25W	01121	CB2235
R588	315-0152-00			RES.,FXD,COMP:1.5K OHM,5%,0.25W	01121	CB1525
R591	315-0391-00			RES.,FXD,COMP:390 OHM,5%,0.25W	01121	CB3915
R593	315-0102-00			RES.,FXD,COMP:1K OHM,5%,0.25W	01121	CB1025
R594	315-0912-00			RES.,FXD,COMP:9.1K OHM,5%,0.25W	01121	CB9125
R595	315-0511-00			RES.,FXD,COMP:510 OHM,5%,0.25W	01121	CB5115
R597	315-0223-00			RES.,FXD,COMP:22K OHM,5%,0.25W	01121	CB2235
R602	315-0103-00			RES.,FXD,COMP:10K OHM,5%,0.25W	01121	CB1035
R604	315-0103-00			RES.,FXD,COMP:10K OHM,5%,0.25W	01121	CB1035
R606	315-0222-00			RES.,FXD,COMP:2.2K OHM,5%,0.25W	01121	CB2225
R608	315-0272-00			RES.,FXD,COMP:2.7K OHM,5%,0.25W	01121	CB2725
R609	315-0391-00			RES.,FXD,COMP:390 OHM,5%,0.25W	01121	CB3915
R610	315-0273-00			RES.,FXD,COMP:27K OHM,5%,0.25W	01121	CB2735
R612	315-0102-00			RES.,FXD,COMP:1K OHM,5%,0.25W	01121	CB1025
R613	315-0474-00			RES.,FXD,COMP:470K OHM,5%,0.25W	01121	CB4745
R615	315-0752-00			RES.,FXD,COMP:7.5K OHM,5%,0.25W	01121	CB7525
R617	315-0511-00			RES.,FXD,COMP:510 OHM,5%,0.25W	01121	CB5115
R618	315-0752-00			RES.,FXD,COMP:7.5K OHM,5%,0.25W	01121	CB7525
R620	315-0681-00			RES.,FXD,COMP:680 OHM,5%,0.25W	01121	CB6815
R624	315-0163-00			RES.,FXD,COMP:16K OHM,5%,0.25W	01121	CB1635

Ckt No.	Tektronix Part No.	Serial/Model No. Eff	Dscont	Name & Description	Mfr Code	Mfr Part Number
R629	315-0103-00			RES.,FXD,COMP:10K OHM,5%,0.25W	01121	CB1035
R631	315-0103-00			RES.,FXD,COMP:10K OHM,5%,0.25W	01121	CB1035
R632	315-0243-00			RES.,FXD,COMP:24K OHM,5%,0.25W	01121	CB2435
R636	315-0102-00			RES.,FXD,COMP:1K OHM,5%,0.25W	01121	CB1025
R637	315-0133-00			RES.,FXD,COMP:13K OHM,5%,0.25W	01121	CB1335
R640	315-0510-00			RES.,FXD,COMP:51 OHM,5%,0.25W	01121	CB5105
R644	315-0622-00			RES.,FXD,COMP:6.2K OHM,5%,0.25W	01121	CB6225
R645	315-0471-00			RES.,FXD,COMP:470 OHM,5%,0.25W	01121	CB4715
R647	315-0821-00			RES.,FXD,COMP:820 OHM,5%,0.25W	01121	CB8215
R649	315-0821-00			RES.,FXD,COMP:820 OHM,5%,0.25W	01121	CB8215
R651	315-0821-00			RES.,FXD,COMP:820 OHM,5%,0.25W	01121	CB8215
R653	315-0821-00			RES.,FXD,COMP:820 OHM,5%,0.25W	01121	CB8215
R655	315-0201-00			RES.,FXD,COMP:200 OHM,5%,0.25W	01121	CB2015
R656	315-0202-00			RES.,FXD,COMP:2K OHM,5%,0.25W	01121	CB2025
R658	315-0391-00			RES.,FXD,COMP:390 OHM,5%,0.25W	01121	CB3915
R660	315-0102-00			RES.,FXD,COMP:1K OHM,5%,0.25W	01121	CB1025
R667	315-0752-00			RES.,FXD,COMP:7.5K OHM,5%,0.25W	01121	CB7525
R677	315-0223-00			RES.,FXD,COMP:22K OHM,5%,0.25W	01121	CB2235
R679	315-0223-00			RES.,FXD,COMP:22K OHM,5%,0.25W	01121	CB2235
R681	315-0223-00			RES.,FXD,COMP:22K OHM,5%,0.25W	01121	CB2235
R683	315-0223-00			RES.,FXD,COMP:22K OHM,5%,0.25W	01121	CB2235
R684	315-0102-00			RES.,FXD,COMP:1K OHM,5%,0.25W	01121	CB1025
R685	315-0392-00			RES.,FXD,COMP:3.9K OHM,5%,0.25W	01121	CB3925
R688	315-0101-00			RES.,FXD,COMP:100 OHM,5%,0.25W	01121	CB1015
R691	315-0391-00			RES.,FXD,COMP:390 OHM,5%,0.25W	01121	CB3915
R692	315-0471-00			RES.,FXD,COMP:470 OHM,5%,0.25W	01121	CB4715
R695	315-0241-00			RES.,FXD,COMP:240 OHM,5%,0.25W	01121	CB2415
R696	315-0101-00			RES.,FXD,COMP:100 OHM,5%,0.25W	01121	CB1015
R697	315-0431-00			RES.,FXD,COMP:430 OHM,5%,0.25W	01121	CB4315
R701	315-0102-00			RES.,FXD,COMP:1K OHM,5%,0.25W	01121	CB1025
R703	315-0751-00			RES.,FXD,COMP:750 OHM,5%,0.25W	01121	CB7515
R704	315-0391-00			RES.,FXD,COMP:390 OHM,5%,0.25W	01121	CB3915
R707	315-0122-00			RES.,FXD,COMP:1.2K OHM,5%,0.25W	01121	CB1225
R709	315-0223-00			RES.,FXD,COMP:22K OHM,5%,0.25W	01121	CB2235
R710	315-0621-00			RES.,FXD,COMP:620 OHM,5%,0.25W	01121	CB6215
R711	315-0223-00			RES.,FXD,COMP:22K OHM,5%,0.25W	01121	CB2235
R713	315-0223-00			RES.,FXD,COMP:22K OHM,5%,0.25W	01121	CB2235
R714	315-0152-00			RES.,FXD,COMP:1.5K OHM,5%,0.25W	01121	CB1525
R715	315-0223-00			RES.,FXD,COMP:22K OHM,5%,0.25W	01121	CB2235
R717	315-0223-00			RES.,FXD,COMP:22K OHM,5%,0.25W	01121	CB2235
R718	315-0152-00			RES.,FXD,COMP:1.5K OHM,5%,0.25W	01121	CB1525
R720	315-0392-00			RES.,FXD,COMP:3.9K OHM,5%,0.25W	01121	CB3925
R723	315-0103-00			RES.,FXD,COMP:10K OHM,5%,0.25W	01121	CB1035
R725	315-0103-00			RES.,FXD,COMP:10K OHM,5%,0.25W	01121	CB1035
R727	315-0102-00			RES.,FXD,COMP:1K OHM,5%,0.25W	01121	CB1025
R741	321-0344-00			RES.,FXD,FILM:37.4K OHM,1%,0.125W	75042	CEAT0-3742F
R743	315-0154-00			RES.,FXD,COMP:150K OHM,5%,0.25W	01121	CB1545
R744	315-0154-00			RES.,FXD,COMP:150K OHM,5%,0.25W	01121	CB1545
R746	315-0272-00			RES.,FXD,COMP:2.7K OHM,5%,0.25W	01121	CB2725
R748	315-0102-00			RES.,FXD,COMP:1K OHM,5%,0.25W	01121	CB1025
R750	321-0289-00			RES.,FXD,FILM:10K OHM,1%,0.125W	75042	CEAT0-1002F
R751	321-0323-00			RES.,FXD,FILM:22.6K OHM,1%,0.125W	75042	CEAT0-2262F
R753	321-0318-00			RES.,FXD,FILM:20K OHM,1%,0.125W	75042	CEAT0-2002F
R754	321-0352-00			RES.,FXD,FILM:45.3K OHM,1%,0.125W	75042	CEAT0-4532F
R756	311-1265-00			RES.,VAR,NONWIR:2K OHM,10%,0.50W	80294	3329P-L58-202

Ckt No.	Tektronix Part No.	Serial/Model No. Eff	Dscont	Name & Description	Mfr Code	Mfr Part Number
R757	321-0304-00			RES.,FXD,FILM:14.3K OHM,1%,0.125W	75042	CEAT0-1432F
R760	311-1265-00			RES.,VAR,NONWIR:2K OHM,10%,0.50W	80294	3329P-L58-202
R761	321-0304-00			RES.,FXD,FILM:14.3K OHM,1%,0.125W	75042	CEAT0-1432F
R764	315-0103-00			RES.,FXD,COMP:10K OHM,5%,0.25W	01121	CB1035
R767	315-0203-00			RES.,FXD,COMP:20K OHM,5%,0.25W	01121	CB2035
R769	315-0154-00			RES.,FXD,COMP:150K OHM,5%,0.25W	01121	CB1545
R770	315-0913-00			RES.,FXD,COMP:91K OHM,5%,0.25W	01121	CB9135
R773	315-0103-00			RES.,FXD,COMP:10K OHM,5%,0.25W	01121	CB1035
R774	315-0103-00			RES.,FXD,COMP:10K OHM,5%,0.25W	01121	CB1035
R775	315-0223-00	XB020000	B049999	RES.,FXD,COMP:22K OHM,5%,0.25W	01121	CB2235
R775	315-0103-00	B050000		RES.,FXD,COMP:10K OHM,5%,0.25W	01121	CB1035
R776	315-0103-00			RES.,FXD,COMP:10K OHM,5%,0.25W	01121	CB1035
R777	315-0223-00			RES.,FXD,COMP:22K OHM,5%,0.25W	01121	CB2235
R778	315-0223-00			RES.,FXD,COMP:22K OHM,5%,0.25W	01121	CB2235
R779	315-0473-00			RES.,FXD,COMP:47K OHM,5%,0.25W	01121	CB4735
R781	315-0473-00			RES.,FXD,COMP:47K OHM,5%,0.25W	01121	CB4735
R782	315-0272-00			RES.,FXD,COMP:2.7K OHM,5%,0.25W	01121	CB2725
R783	315-0223-00			RES.,FXD,COMP:22K OHM,5%,0.25W	01121	CB2235
R785	315-0222-00			RES.,FXD,COMP:2.2K OHM,5%,0.25W	01121	CB2225
R786	315-0103-00			RES.,FXD,COMP:10K OHM,5%,0.25W	01121	CB1035
R788	315-0223-00			RES.,FXD,COMP:22K OHM,5%,0.25W	01121	CB2235
R790	315-0223-00			RES.,FXD,COMP:22K OHM,5%,0.25W	01121	CB2235
R791	315-0222-00			RES.,FXD,COMP:2.2K OHM,5%,0.25W	01121	CB2225
R792	315-0103-00			RES.,FXD,COMP:10K OHM,5%,0.25W	01121	CB1035
R793	315-0154-00			RES.,FXD,COMP:150K OHM,5%,0.25W	01121	CB1545
R795	321-0323-00			RES.,FXD,FILM:22.6K OHM,1%,0.125W	75042	CEAT0-2262F
R796	315-0153-00			RES.,FXD,COMP:15K OHM,5%,0.25W	01121	CB1535
R797	321-0289-00			RES.,FXD,FILM:10K OHM,1%,0.125W	75042	CEAT0-1002F
R798	321-0327-00			RES.,FXD,FILM:24.9K OHM,1%,0.125W	75042	CEAT0-2492F
R799	315-0154-00			RES.,FXD,COMP:150K OHM,5%,0.25W	01121	CB1545
R801	315-0471-00			RES.,FXD,COMP:470 OHM,5%,0.25W	01121	CB4715
R802	315-0103-00			RES.,FXD,COMP:10K OHM,5%,0.25W	01121	CB1035
R804	315-0103-00			RES.,FXD,COMP:10K OHM,5%,0.25W	01121	CB1035
R807	315-0103-00			RES.,FXD,COMP:10K OHM,5%,0.25W	01121	CB1035
R808	315-0103-00			RES.,FXD,COMP:10K OHM,5%,0.25W	01121	CB1035
R809	315-0103-00			RES.,FXD,COMP:10K OHM,5%,0.25W	01121	CB1035
R810	315-0103-00			RES.,FXD,COMP:10K OHM,5%,0.25W	01121	CB1035
R812	315-0222-00			RES.,FXD,COMP:2.2K OHM,5%,0.25W	01121	CB2225
R814	315-0104-00			RES.,FXD,COMP:100K OHM,5%,0.25W	01121	CB1045
R816	315-0104-00			RES.,FXD,COMP:100K OHM,5%,0.25W	01121	CB1045
R818	315-0104-00			RES.,FXD,COMP:100K OHM,5%,0.25W	01121	CB1045
R820	315-0104-00			RES.,FXD,COMP:100K OHM,5%,0.25W	01121	CB1045
R823	315-0752-00			RES.,FXD,COMP:7.5K OHM,5%,0.25W	01121	CB7525
R825	315-0752-00			RES.,FXD,COMP:7.5K OHM,5%,0.25W	01121	CB7525
R837	315-0752-00			RES.,FXD,COMP:7.5K OHM,5%,0.25W	01121	CB7525
R854	315-0103-00			RES.,FXD,COMP:10K OHM,5%,0.25W	01121	CB1035
R859	315-0752-00			RES.,FXD,COMP:7.5K OHM,5%,0.25W	01121	CB7525
R860	315-0103-00			RES.,FXD,COMP:10K OHM,5%,0.25W	01121	CB1035
R862	315-0103-00			RES.,FXD,COMP:10K OHM,5%,0.25W	01121	CB1035
R865	315-0103-00			RES.,FXD,COMP:10K OHM,5%,0.25W	01121	CB1035
R866	315-0752-00			RES.,FXD,COMP:7.5K OHM,5%,0.25W	01121	CB7525
R867	315-0752-00			RES.,FXD,COMP:7.5K OHM,5%,0.25W	01121	CB7525
R868	315-0103-00			RES.,FXD,COMP:10K OHM,5%,0.25W	01121	CB1035
R870	315-0752-00			RES.,FXD,COMP:7.5K OHM,5%,0.25W	01121	CB7525
R871	315-0752-00			RES.,FXD,COMP:7.5K OHM,5%,0.25W	01121	CB7525

Ckt No.	Tektronix Part No.	Serial/Model No. Eff	Dscont	Name & Description	Mfr Code	Mfr Part Number
R873	315-0103-00			RES.,FXD,COMP:10K OHM,5%,0.25W	01121	CB1035
R876	315-0752-00			RES.,FXD,COMP:7.5K OHM,5%,0.25W	01121	CB7525
R878	315-0103-00			RES.,FXD,COMP:10K OHM,5%,0.25W	01121	CB1035
R883	315-0103-00			RES.,FXD,COMP:10K OHM,5%,0.25W	01121	CB1035
R884	315-0752-00			RES.,FXD,COMP:7.5K OHM,5%,0.25W	01121	CB7525
R886	315-0752-00			RES.,FXD,COMP:7.5K OHM,5%,0.25W	01121	CB7525
R888	315-0752-00			RES.,FXD,COMP:7.5K OHM,5%,0.25W	01121	CB7525
R890	321-0344-00			RES.,FXD,FILM:37.4K OHM,1%,0.125W	75042	CEAT0-3742F
R892	315-0204-00			RES.,FXD,COMP:200K OHM,5%,0.25W	01121	CB2045
R893	315-0204-00			RES.,FXD,COMP:200K OHM,5%,0.25W	01121	CB2045
R894	315-0474-00			RES.,FXD,COMP:470K OHM,5%,0.25W	01121	CB4745
R895	315-0125-00			RES.,FXD,COMP:1.2M OHM,5%,0.25W	01121	CB1255
R897	315-0154-00			RES.,FXD,COMP:150K OHM,5%,0.25W	01121	CB1545
R898	321-0344-00			RES.,FXD,FILM:37.4K OHM,1%,0.125W	75042	CEAT0-3742F
R900	315-0473-00			RES.,FXD,COMP:47K OHM,5%,0.25W	01121	CB4735
R902	315-0473-00			RES.,FXD,COMP:47K OHM,5%,0.25W	01121	CB4735
R904	315-0473-00			RES.,FXD,COMP:47K OHM,5%,0.25W	01121	CB4735
R906	315-0473-00			RES.,FXD,COMP:47K OHM,5%,0.25W	01121	CB4735
R942	308-0450-00			RES.,FXD,WW:70 OHM,1%,3W	91637	RS2B-B70R00F
R981	315-0470-00			RES.,FXD,COMP:47 OHM,5%,0.25W	01121	CB4705
R983	315-0271-00			RES.,FXD,COMP:270 OHM,5%,0.25W	01121	CB2715
R985	315-0102-00			RES.,FXD,COMP:1K OHM,5%,0.25W	01121	CB1025
R987	315-0184-00			RES.,FXD,COMP:180K OHM,5%,0.25W	01121	CB1845
R989	321-0232-00			RES.,FXD,FILM:2.55K OHM,1%,0.125W	75042	CEAT0-2551F
R990	321-0260-00			RES.,FXD,FILM:4.99K OHM,1%,0.125W	75042	CEAT0-4991F
R992	315-0272-00			RES.,FXD,COMP:2.7K OHM,5%,0.25W	01121	CB2725
S6[1]	260-1227-01			SWITCH,PUSH:DP,2-BUTTON	80009	260-1227-01
S11	105-0352-00			ACTUATOR,CAM SW:A TRIG SENSITIVITY	80009	105-0352-00
S57[2]						
S89[3]	260-1227-01			SWITCH,PUSH:DP,2-BUTTON	80009	260-1227-01
S95	260-1132-00			SWITCH,PUSH:1 BUTTON,DOUBLE POLE	80009	260-1132-00
S106[4]	260-1227-01			SWITCH,PUSH:DP,2-BUTTON	80009	260-1227-01
S111	105-0352-00			ACTUATOR,CAM SW:B TRIG SENSITIVITY	80009	105-0352-00
S157[5]						
S189[6]	260-1227-01			SWITCH,PUSH:DP,2-BUTTON	80009	260-1227-01
S221[7]	670-2171-00			SWITCH,PUSH:MODE	80009	670-2171-00
S233[7]	670-2169-00			SWITCH,PUSH:GATE	80009	670-2169-00
S256[8]						
S300	260-1206-00			SWITCH,TOGGLE:SPDT,5A,115VACCENTER OFF	09353	7103SYZ
S471	260-0735-00			SWITCH,PUSH:SPST	81073	39-1
S584[9]						
S599[7]	670-2172-00			SWITCH,PUSH:AVERAGE	80009	670-2172-00
S626	260-0723-00			SWITCH,SLIDE:DPDT,0.5A,125VAC	80009	260-0723-00
S699[7]	670-2170-00			SWITCH,PUSH:CLOCK	80009	670-2170-00
T75	120-0444-00			XFMR,TOROID:5 TURNS,BIFILAR	80009	120-0444-00
T175	120-0444-00			XFMR,TOROID:5 TURNS,BIFILAR	80009	120-0444-00
T287	120-0459-00			XFMR,TOROID:10 TURNS,BIFILAR	80009	120-0459-00
T320	120-0444-00			XFMR,TOROID:5 TURNS,BIFILAR	80009	120-0444-00
T342	120-0444-00			XFMR,TOROID:5 TURNS,BIFILAR	80009	120-0444-00
T395	120-0459-00			XFMR,TOROID:10 TURNS,BIFILAR	80009	120-0459-00
T994	120-0784-00			TRANSFORMER,PLS:POT CORE,SW REGULATOR	80009	120-0784-00
U43	156-0223-00			MICROCIRCUIT,LI:OPERATIONAL AMPLIFIER	12040	LM308H
U143	156-0223-00			MICROCIRCUIT,LI:OPERATIONAL AMPLIFIER	12040	LM308H

[1]Furnished as a unit with S89.
[2]Furnished as a unit with R57.
[3]Furnished as a unit with S6.
[4]Furnished as a unit with S189.
[5]Furnished as a unit with R157.
[6]Furnished as a unit with S106.
[7]See Mechanical Parts List for replacement parts.
[8]Furnished as a unit with R256 and S584.
[9]Furnished as a unit with R256 and S256.

Ckt No.	Tektronix Part No.	Serial/Model No. Eff	Dscont	Name & Description	Mfr Code	Mfr Part Number
U244	156-0030-00			MICROCIRCUIT,DI:QUAD 2-INPUT POS NAND GATE	01295	SN7400N
U264	156-0113-00			MICROCIRCUIT,DI:QUAD 2-INPUT POS NAND GATE	01295	SN74L00N
U266	156-0057-00			MICROCIRCUIT,DI:QUAD 2-INPUT NAND GATE	07263	U6A740159X
U268	156-0043-00			MICROCIRCUIT,DI:2-INPUT NOR GATE	01295	SN7402N
U280	156-0228-00			MICROCIRCUIT,DI:MASTER SLAVE TYPE D F-F	04713	MC1670L
U287	156-0226-00			MICROCIRCUIT,DI:QUAD 2-INPUT NOR GATE	04713	MC1662L
U290	156-0227-00			MICROCIRCUIT,DI:QUAD 2-INPUT OR GATE	04713	MC1664L
U295	156-0226-00			MICROCIRCUIT,DI:QUAD 2-INPUT NOR GATE	04713	MC1662L
U351	156-0047-00	B010100	B029999	MICROCIRCUIT,DI:3-INPUT NAND GATE	01295	SN7410N
U351	156-0144-00	B030000		MICROCIRCUIT,DI:3-INPUT POS NAND GATE	01295	SN7412N
U360	156-0226-00			MICROCIRCUIT,DI:QUAD 2-INPUT NOR GATE	04713	MC1662L
U371	156-0205-00			MICROCIRCUIT,DI:QUAD 2-INPUT NOR GATE	04713	MC10102L
U374	156-0230-00			MICROCIRCUIT,DI:DUAL D MA-SLAVE FLIP-FLOP	04713	MC10131L
U386	156-0226-00			MICROCIRCUIT,DI:QUAD 2-INPUT NOR GATE	04713	MC1662L
U390	156-0228-00			MICROCIRCUIT,DI:MASTER SLAVE TYPE D F-F	04713	MC1670L
U401	156-0228-00			MICROCIRCUIT,DI:MASTER SLAVE TYPE D F-F	04713	MC1670L
U409	156-0230-00			MICROCIRCUIT,DI:DUAL D MA-SLAVE FLIP-FLOP	04713	MC10131L
U413	156-0230-00			MICROCIRCUIT,DI:DUAL D MA-SLAVE FLIP-FLOP	04713	MC10131L
U421	156-0047-00			MICROCIRCUIT,DI:3-INPUT NAND GATE	01295	SN7410N
U450	156-0228-00			MICROCIRCUIT,DI:MASTER SLAVE TYPE D F-F	04713	MC1670L
U463	156-0225-00			MICROCIRCUIT,DI:DUAL 4-INPUT GATE	04713	MC1661L
U478	156-0030-00			MICROCIRCUIT,DI:QUAD 2-INPUT POS NAND GATE	01295	SN7400N
U489	156-0144-00			MICROCIRCUIT,DI:3-INPUT POS NAND GATE	01295	SN7412N
U496	156-0230-00			MICROCIRCUIT,DI:DUAL D MA-SLAVE FLIP-FLOP	04713	MC10131L
U499	156-0230-00			MICROCIRCUIT,DI:DUAL D MA-SLAVE FLIP-FLOP	04713	MC10131L
U519	156-0079-00			MICROCIRCUIT,DI:DECADE COUNTER,TTL	07263	9390PC
U521	156-0079-00			MICROCIRCUIT,DI:DECADE COUNTER,TTL	07263	9390PC
U530	156-0180-00			MICROCIRCUIT,DI:QUAD 2-INPUT NAND GATE	01295	SN74S00N
U536	156-0252-00			MICROCIRCUIT,DI:TRIPLE 4-3-3 INP NOR GATE	04713	MC10106L
U625	156-0091-00			MICROCIRCUIT,DI:DIV BY 2 AND 5 RIPPLE CNTR	18324	N8292A
U628	156-0124-00			MICROCIRCUIT,DI:SGL FREQ/PHASE DETECTOR	04713	MC4044P
U643	156-0266-00			MICROCIRCUIT,LI:EMITTER COUPLED OSCILLATOR	04713	MC1648P
U647	156-0230-00			MICROCIRCUIT,DI:DUAL D MA-SLAVE FLIP-FLOP	04713	MC10131L
U654	156-0230-00			MICROCIRCUIT,DI:DUAL D MA-SLAVE FLIP-FLOP	04713	MC10131L
U662	156-0079-00			MICROCIRCUIT,DI:DECADE COUNTER,TTL	07263	9390PC
U665	156-0079-00			MICROCIRCUIT,DI:DECADE COUNTER,TTL	07263	9390PC
U668	156-0091-00			MICROCIRCUIT,DI:DIV BY 2 AND 5 RIPPLE CNTR	18324	N8292A
U671	156-0091-00			MICROCIRCUIT,DI:DIV BY 2 AND 5 RIPPLE CNTR	18324	N8292A
U674	156-0091-00			MICROCIRCUIT,DI:DIV BY 2 AND 5 RIPPLE CNTR	18324	N8292A
U676	156-0057-00			MICROCIRCUIT,DI:QUAD 2-INPUT NAND GATE	07263	U6A740159X
U678	156-0058-00			MICROCIRCUIT,DI:HEX INVERTER	04713	MC7404P
U725	156-0057-00			MICROCIRCUIT,DI:QUAD 2-INPUT NAND GATE	07263	U6A740159X
U728	156-0097-00			MICROCIRCUIT,DI:DIV BY 2 AND 5 RIPPLE CNTR	18324	M8290A
U732	156-0040-00			MICROCIRCUIT,DI:QUAD LATCH,TTL	07263	7475PC
U735	156-0040-00			MICROCIRCUIT,DI:QUAD LATCH,TTL	07263	7475PC
U741	155-0088-00			MICROCIRCUIT,DI:ML,LEGEND GENERATOR "C2"	80009	155-0088-00
U758	155-0090-00			MICROCIRCUIT,DI:MONOLITHIC,4 DECADE COUNTER	80009	155-0090-00
U762[1]	155-0090-00			MICROCIRCUIT,DI:MONOLITHIC,4 DECADE COUNTER	80009	155-0090-00
U790	156-0030-00			MICROCIRCUIT,DI:QUAD 2-INPUT POS NAND GATE	01295	SN7400N
U890	155-0087-00			MICROCIRCUIT,DI:ML,LEGEND GENERATOR "C1"	80009	155-0087-00
U898	155-0086-00			MICROCIRCUIT,DI:ML,LEGEND GENERATOR "R"	80009	155-0086-00
VR36	152-0278-00			SEMICOND DEVICE:ZENER,400MA,3V,5%	07910	1N4372A
VR67	152-0279-00			SEMICOND DEVICE:ZENER,0.4W,5.1V,5%	07910	1N751A
VR69	152-0514-00			SEMICOND DEVICE:ZENER,0.4W,10V	99942	R4763

[1]155-0090-01 may be used.

Ckt No.	Tektronix Part No.	Serial/Model No. Eff	Dscont	Name & Description	Mfr Code	Mfr Part Number
VR136	152-0278-00			SEMICOND DEVICE:ZENER,400MA,3V,5%	07910	1N4372A
VR167	152-0279-00			SEMICOND DEVICE:ZENER,0.4W,5.1V,5%	07910	1N751A
VR169	152-0514-00			SEMICOND DEVICE:ZENER,0.4W,10V	99942	R4763
VR259	152-0280-00			SEMICOND DEVICE:ZENER,0.4W,6.2V,5%	04713	1N753A
VR419	152-0395-00			SEMICOND DEVICE:ZENER,0.4W,4.3V,5%	07910	1N749A
VR493	152-0395-00			SEMICOND DEVICE:ZENER,0.4W,4.3V,5%	07910	1N749A
VR771	152-0168-00			SEMICOND DEVICE:ZENER,0.4W,12V,5%	04713	1N963B
VR791	152-0168-00			SEMICOND DEVICE:ZENER,0.4W,12V,5%	04713	1N963B
VR995	152-0309-00			SEMICOND DEVICE:ZENER,1W,6.2V,5%	04713	1N3828A
Y622	119-0262-00			OSCILLATOR,RF:XTAL CONTROLLED,5 MHZ ADJ	80009	119-0262-00

SECTION 7

DIAGRAMS AND CIRCUIT BOARD ILLUSTRATIONS

Symbols and Reference Designators

Electrical components shown on the diagrams are in the following units unless noted otherwise:

Capacitors = Values one or greater are in picofarads (pF).
Values less than one are in microfarads (μF).
Resistors = Ohms (Ω)

Symbols used on the diagrams are based on USA Standard Y32.2-1967.

Logic symbology is based on MIL-STD-806B in terms of positive logic. Logic symbols depict the logic function performed and may differ from the manufacturer's data.

The following special symbols are used on the diagrams:

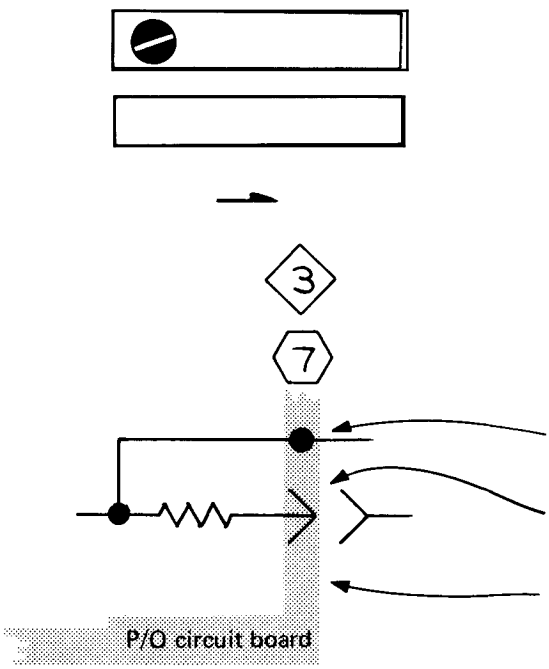

External Screwdriver adjustment.

External control or connector.

Clockwise control rotation in direction of arrow.

Refer to diagram number indicated in diamond.

Refer to waveform number indicated in hexagon.

Connection soldered to circuit board.

Connection made to circuit board with interconnecting pin.

Blue tint encloses components located on circuit board.

The following prefix letters are used as reference designators to identify components or assemblies on the diagrams.

A	Assembly, separable or repairable (circuit board, etc.)
AT	Attenuator, fixed or variable
B	Motor
BT	Battery
C	Capacitor, fixed or variable
CR	Diode, signal or rectifier
DL	Delay line
DS	Indicating device (lamp)
F	Fuse
FL	Filter
H	Heat dissipating device (heat sink, heat radiator, etc.)
HR	Heater
J	Connector, stationary portion
K	Relay
L	Inductor, fixed or variable
LR	Inductor/resistor combination
M	Meter
Q	Transistor or silicon-controlled rectifier
P	Connector, movable portion
R	Resistor, fixed or variable
RT	Thermistor
S	Switch
T	Transformer
TP	Test point
U	Assembly, inseparable or non-repairable (integrated circuit, etc.)
V	Electron tube
VR	Voltage regulator (zener diode, etc.)
Y	Crystal

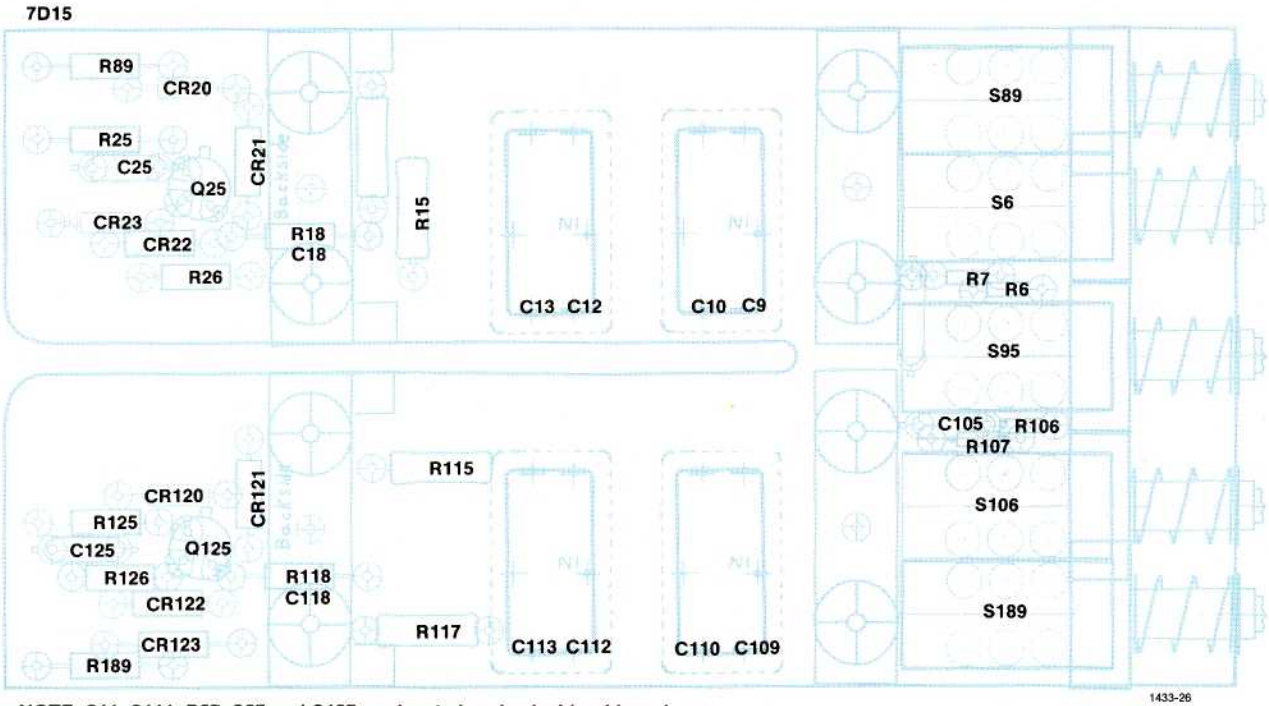

NOTE: S11, S111, R57, S57 and S157 are located on back side of board.

Fig. 7-1. A5 Attenuator circuit board.

VOLTAGE AND WAVEFORM TEST CONDITIONS

Typical voltage measurements were obtained under the following conditions unless noted otherwise on the individual diagrams:

Voltmeter

Type	Non-loading digital multimeter
Input Impedance	10 MΩ on all ranges
Range	0 to 1000 volts
Recommended type (as used for voltages on diagrams)	Tektronix 7D13 Digital Multimeter

MEASUREMENT INTERVAL	See Waveform note on each diagram	SOURCE	INPUT B	STORAGE	ON
		COUPLING	AC	TRUE GATE	TRUE GATE
		DISPLAY TIME	0.1 s	GATE	NORM
	PRESET	SLOPE	+	MODE	FREQ B
TRIGGER A and B P-P SENS	1 V			TIME	100 ms
				CLOCK	1 ms

No signal input for voltage measurements. 4 V, 1 kHz square wave from oscilloscope Calibrator applied to CH A INPUT connector for waveforms.

A 7A13 Amplifier (right vertical compartment using a 10X probe with readout coding ring. P6053 probe used for waveforms on diagrams).

7B53A (A horizontal compartment)

Level/Slope	Centered on positive slope
Triggering	
Mode	Norm
Coupling	AC
Source	INT
Magnifier	X1
Variable	Cal In
TIME/DIV	1 ms

7704

Vertical Mode	Right
Horizontal Mode	A
A Intensity	Optimum
B Intensity	Counterclockwise
Calibrator	
Volts	4.0 V
Rate	1 kHz
A Trigger Source	Right Vert

Waveforms shown are actual waveform photographs taken with a Tektronix Oscilloscope Camera System and Projected Graticule. Vertical deflection factor shown on waveform is the actual deflection factor from the probe tip. Voltages and waveforms on the diagrams (shown in blue) are not absolute and may vary between instruments because of component tolerances, internal calibration, or front-panel settings. Readouts are simulated in larger-than-normal type.

NOTE

The spring tension of the pin sockets ensures a good connection between the cirucit board and pin. This spring tension may be damaged by using the pin sockets as a connecting point for spring-loaded probe tips, alligator clips, etc.

@

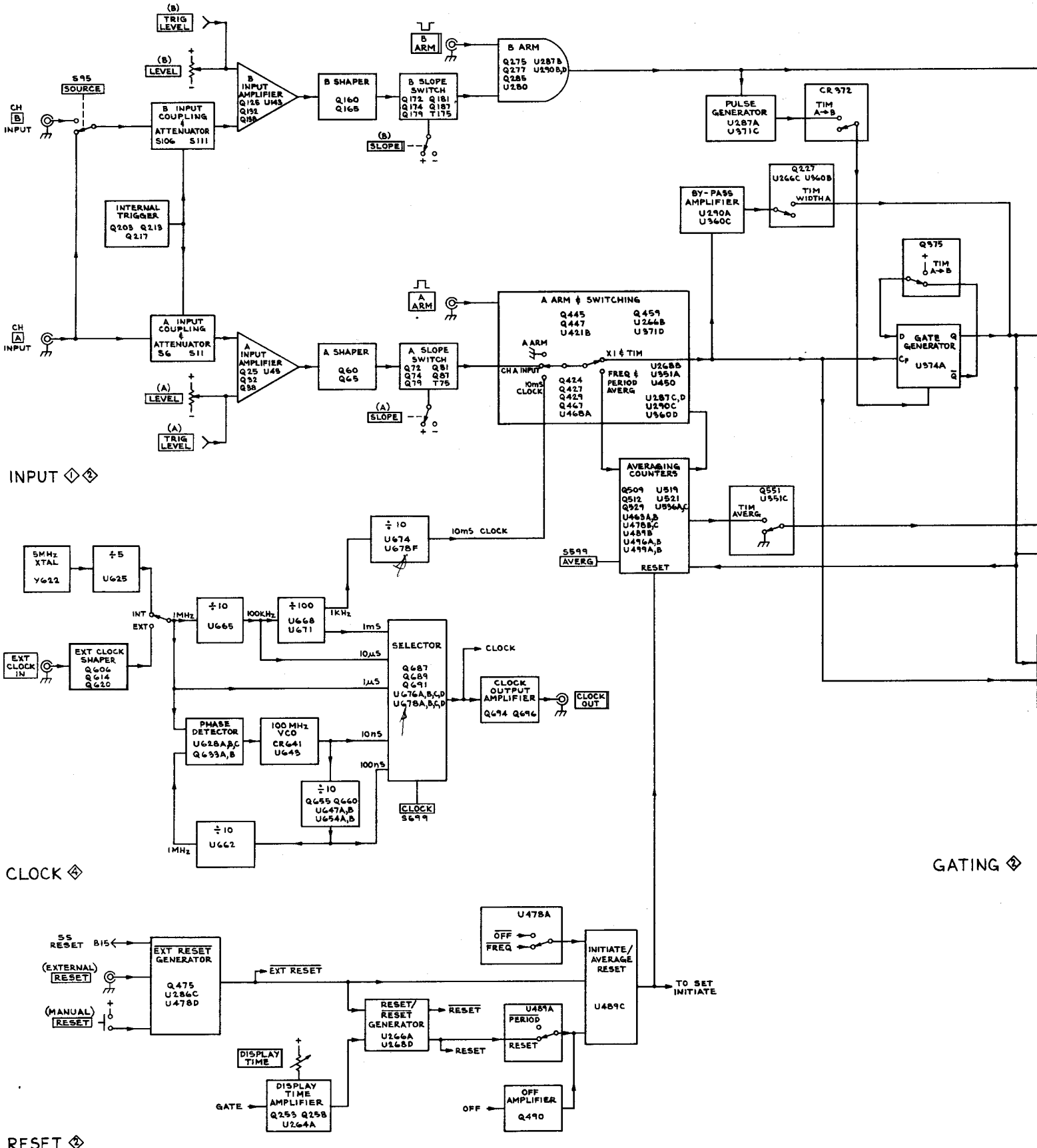
(B) TRIG LEVEL
(B) LEVEL
S95 SOURCE
CH B INPUT
B INPUT COUPLING & ATTENUATOR S106 S111
B INPUT AMPLIFIER Q125 U145 Q132 Q138
B SHAPER Q160 Q165
B SLOPE SWITCH Q172 Q181 Q174 Q187 Q179 T175
(B) SLOPE
B ARM
B ARM Q275 U287B Q277 U290B,D Q285 U280
PULSE GENERATOR U287A U371C
CR 972 TIM A→B
INTERNAL TRIGGER Q203 Q213 Q217
BY-PASS AMPLIFIER U290A U360C
Q227 U266C U360B TIM WIDTH A
Q975 TIM A→B
CH A INPUT
A INPUT COUPLING & ATTENUATOR S6 S11
A INPUT AMPLIFIER Q25 U45 Q32 Q38
A SHAPER Q60 Q65
A SLOPE SWITCH Q72 Q81 Q74 Q87 Q79 T75
(A) LEVEL
(A) SLOPE
(A) TRIG LEVEL
A ARM
A ARM & SWITCHING Q445 Q447 U421B Q459 U266B U371D
A ARM
X1 & TIM
CH A INPUT
10mS CLOCK
Q424 Q427 Q429 Q467 U468A
FREQ & PERIOD AVERG
U268B U351A U450 U287C,D U290C U360D
D GATE Q GENERATOR U974A
INPUT 1 2
AVERAGING COUNTERS Q509 U519 Q512 U521 Q929 U536A,C U463A,B U478B,C U489B U496A,B U499A,B RESET
Q551 U551C TIM AVERG
S599 AVERG
÷10 U674 U678F
10mS CLOCK
5MHz XTAL Y622
÷5 U625
INT
EXT
1MHz
÷10 U665
100KHz
÷100 U668 U671
1KHz
1mS
10µS
1µS
SELECTOR Q687 Q689 Q691 U676A,B,C,D U678A,B,C,D
CLOCK
CLOCK OUTPUT AMPLIFIER Q694 Q696
CLOCK OUT
EXT CLOCK IN
EXT CLOCK SHAPER Q606 Q614 Q620
PHASE DETECTOR U628A,B,C Q633A,B
100 MHz VCO CR641 U643
10nS
100nS
÷10 Q655 Q660 U647A,B U654A,B
CLOCK S699
÷10 U662
1MHz
CLOCK 4
GATING 2
U478A OFF FREQ
INITIATE/ AVERAGE RESET U489C
TO SET INITIATE
SS RESET B15
EXT RESET GENERATOR Q475 U286C U478D
(EXTERNAL) RESET
(MANUAL) RESET
EXT RESET
RESET/ RESET GENERATOR U266A U268D
RESET
RESET
U489A PERIOD RESET
DISPLAY TIME
DISPLAY TIME AMPLIFIER Q253 Q258 U264A
GATE
OFF AMPLIFIER Q490
OFF
RESET 2

7D15

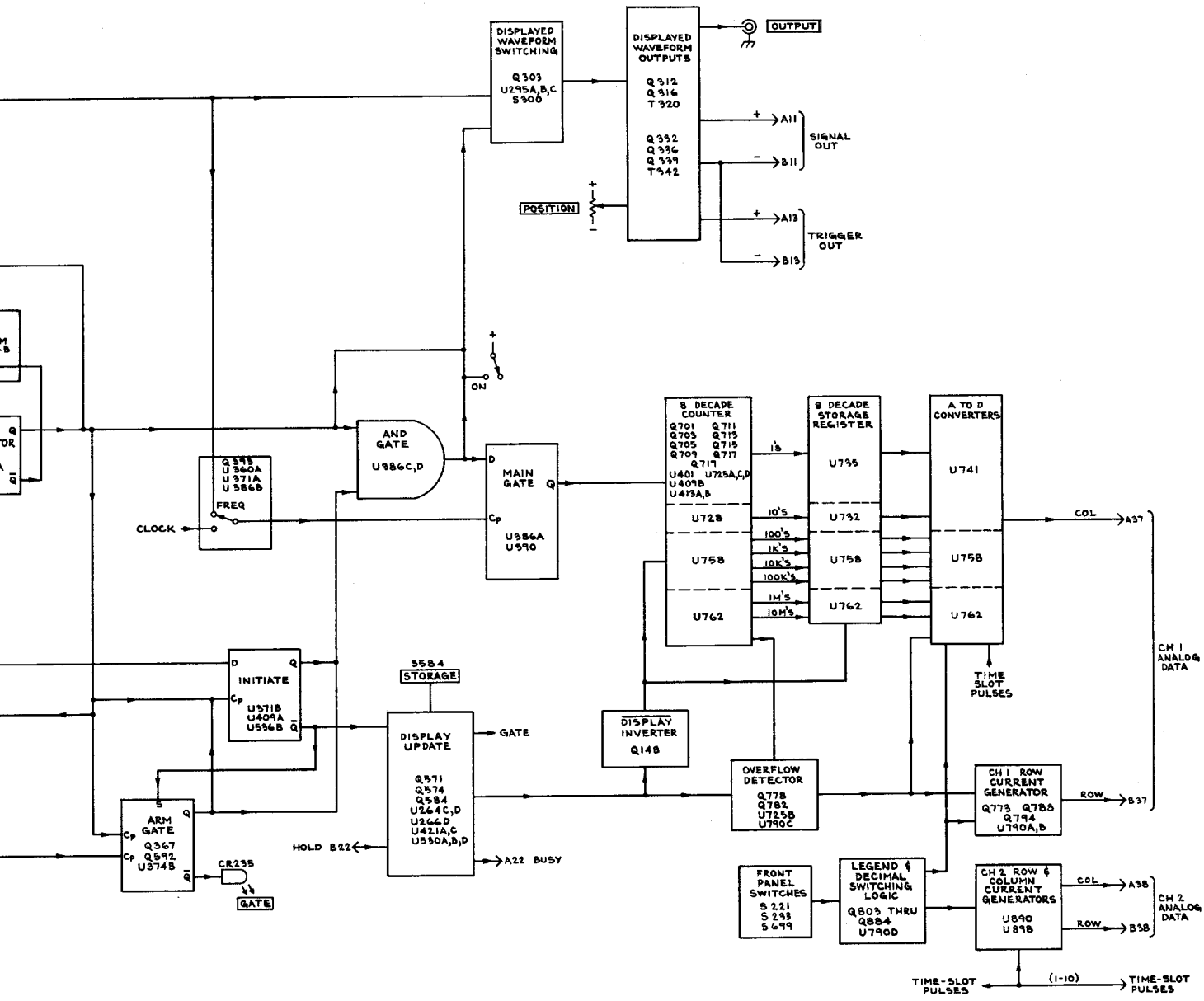

7D15

BLOCK DIAGRAM

NOTE: S

GATING ④

COUNTERS & READOUT ⑤ ⑥

@

BLOCK DIAGRAM

1

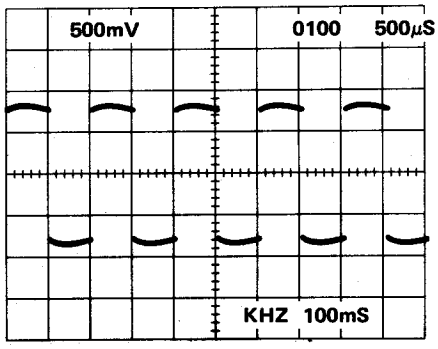
500mV
0100
500µS
KHZ 100mS

2

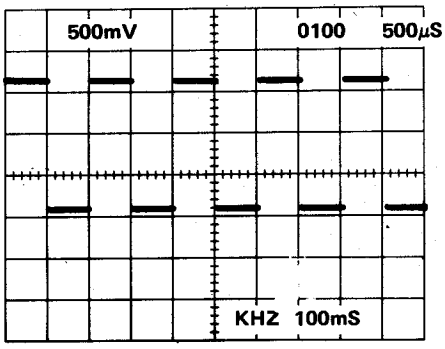
500mV
0100
500µS
KHZ 100mS

3

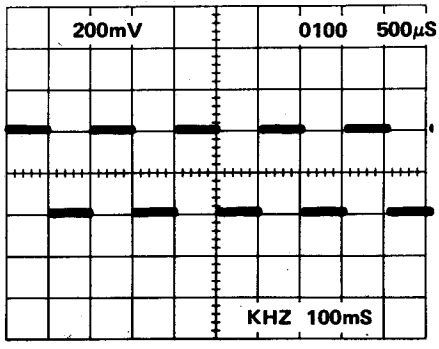
200mV
0100
500µS
KHZ 100mS

4

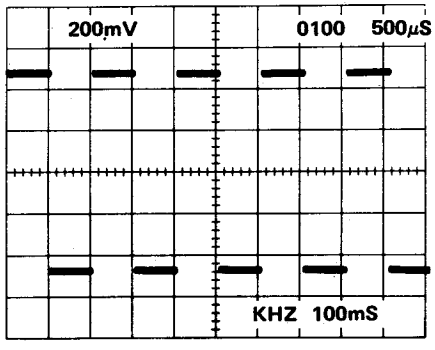
200mV
0100
500µS
KHZ 100mS

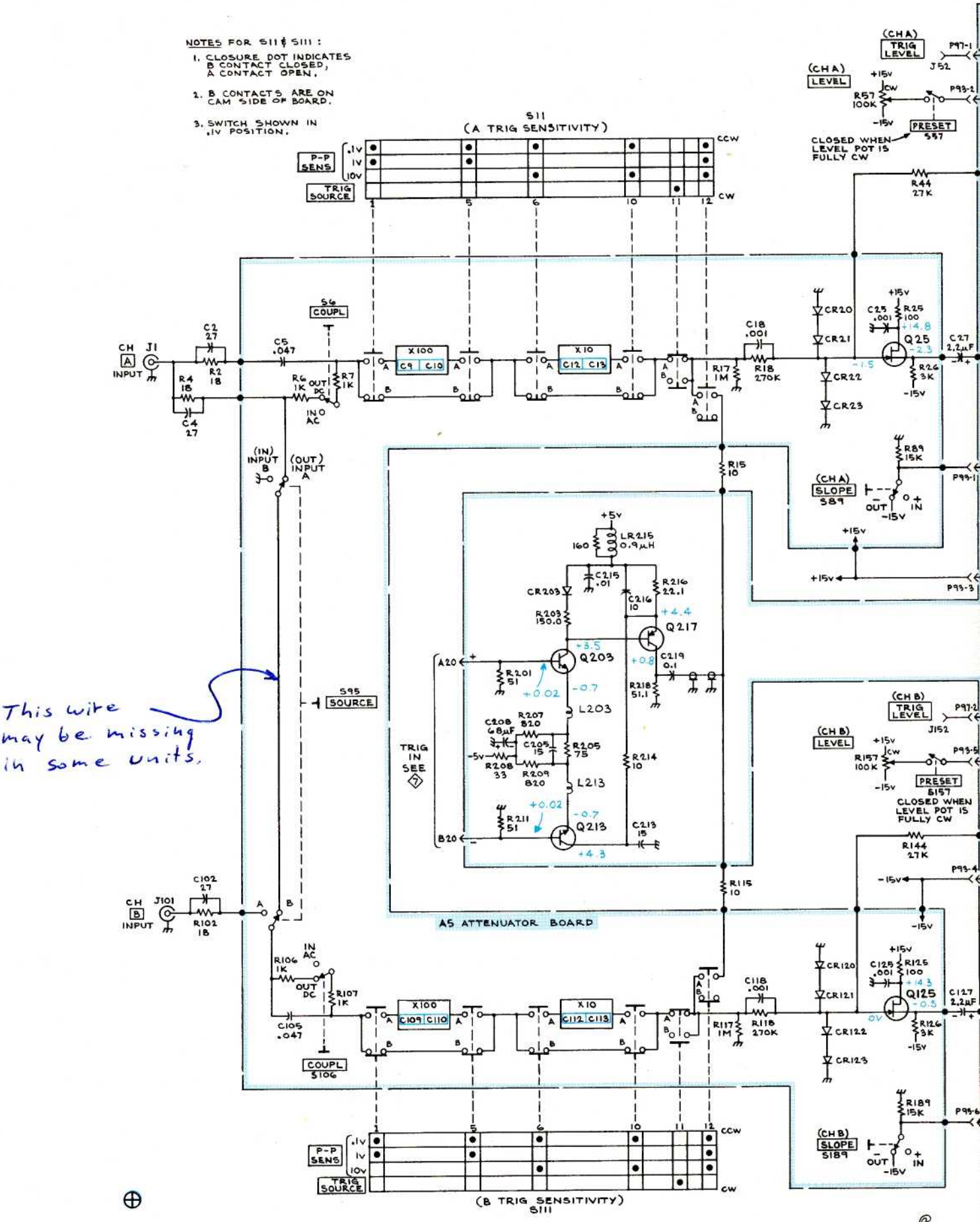
NOTES FOR S111 & S111 :
1. CLOSURE DOT INDICATES B CONTACT CLOSED, A CONTACT OPEN.
2. B CONTACTS ARE ON CAM SIDE OF BOARD.
3. SWITCH SHOWN IN .1V POSITION.
S11 (A TRIG SENSITIVITY)
P-P SENS
.1V
1V
10V
TRIG SOURCE
CCW
CW
(CH A) TRIG LEVEL
P97-1
J52
(CH A) LEVEL
+15v
CW
R57 100K
-15v
P93-2
PRESET S57
CLOSED WHEN LEVEL POT IS FULLY CW
R44 27K
CH A INPUT
J1
C2 27
R2 18
C5 .047
S6 COUPL
R6 1K
R7 1K
OUT DC
IN AC
R4 18
C4 27
X100
C9 C10
X10
C12 C13
C18 .001
R17 1M
R18 270K
CR20
CR21
CR22
CR23
C25 .001
R25 100
Q25
R26 3K
C27 2.2µF
(IN) INPUT B
(OUT) INPUT A
R15 10
R89 15K
(CH A) SLOPE S89
OUT
IN
P99-1
P99-3
+5v
LR215 0.9µH
160
C215 .01
CR203
C216 10
R216 22.1
R203 150.0
Q217
Q203
Q213
C219 0.1
R218 51.1
A20
B20
R201 51
R211 51
L203
L213
C208 68µF
C205 15
R205 75
R208 33
R209 820
R214 10
TRIG IN SEE 7
S95 SOURCE
This wire may be missing in some units.
A5 ATTENUATOR BOARD
(CH B) TRIG LEVEL
P97-2
J152
(CH B) LEVEL
R157 100K
PRESET S157
CLOSED WHEN LEVEL POT IS FULLY CW
R144 27K
P93-4
P93-5
CH B INPUT
J101
C102 27
R102 18
R106 1K
R107 1K
C105 .047
COUPL S106
R115 10
C118 .001
R117 1M
R118 270K
CR120
CR121
CR122
CR123
C125 .001
R125 100
Q125
R126 3K
C127 2.2µF
R189 15K
(CH B) SLOPE S189
P99-6
(B TRIG SENSITIVITY) S111

7D15

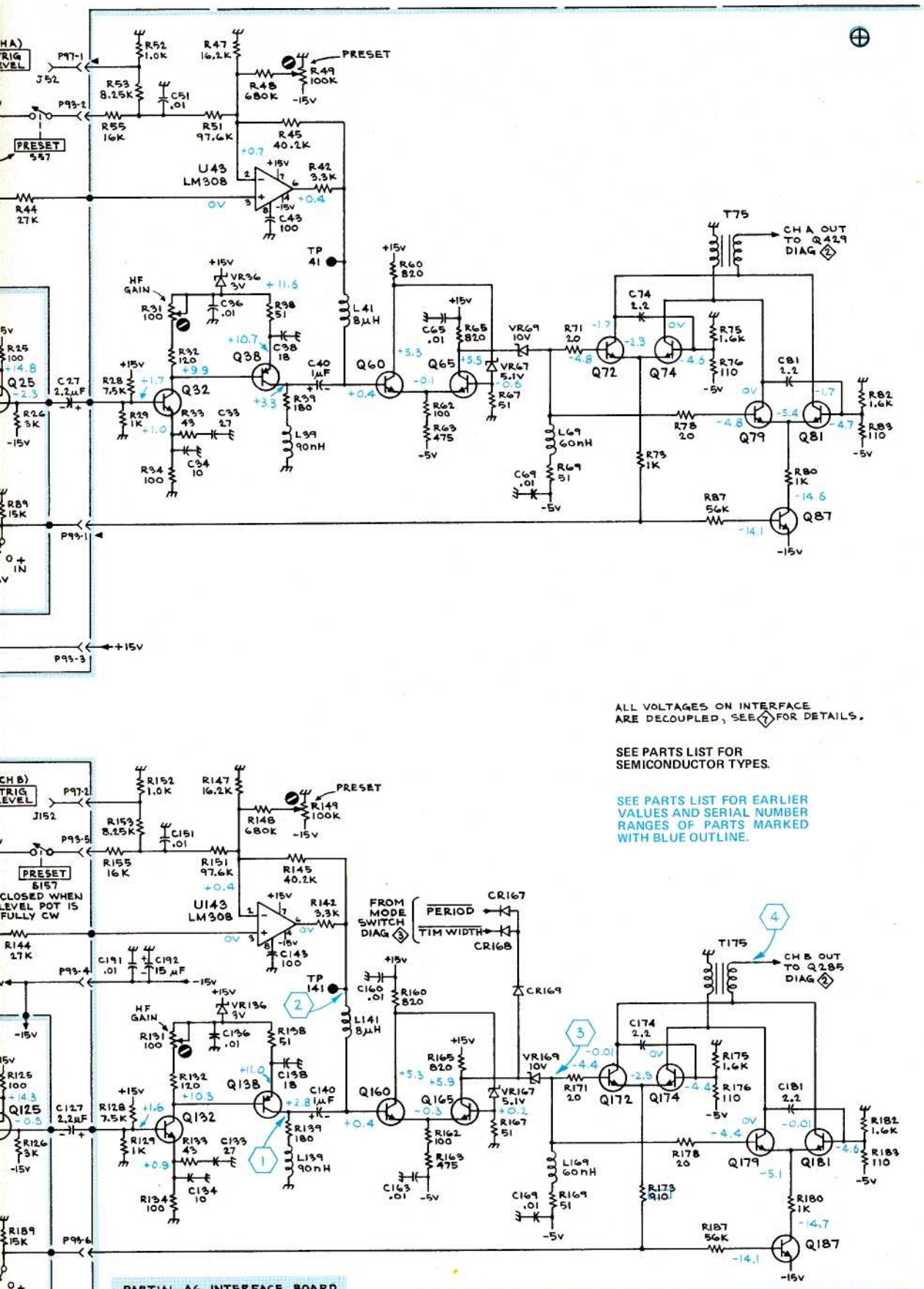

TRIGGER INPUT AMPS

1

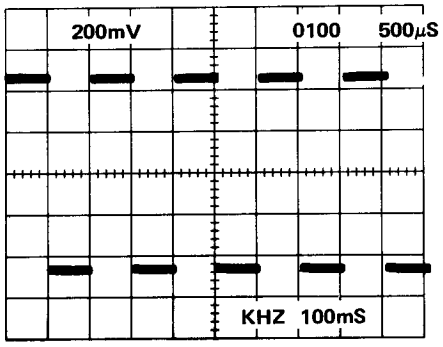

2

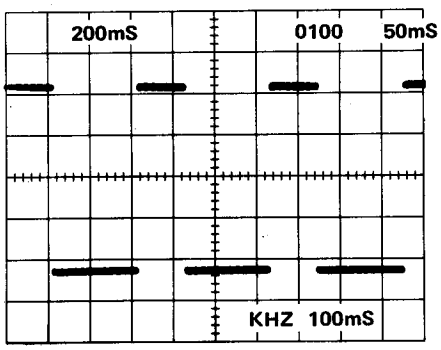

3

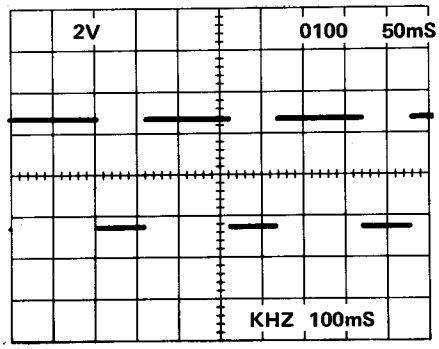

4

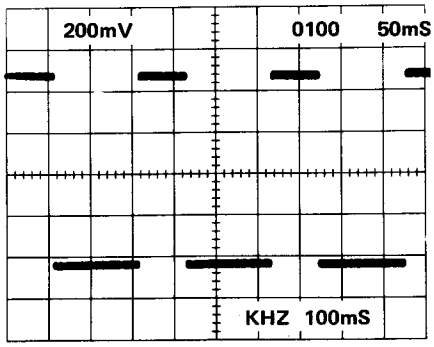

5

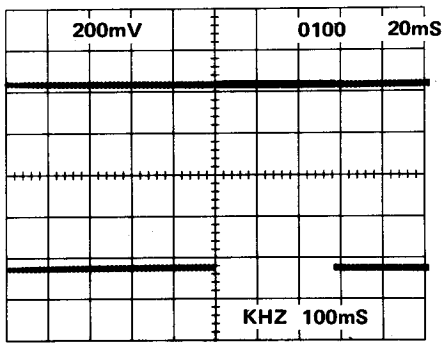

6

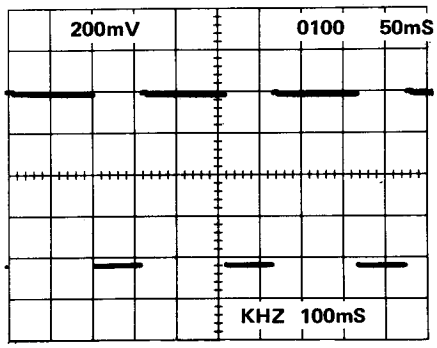

7

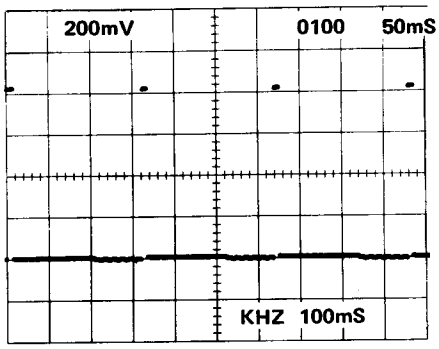

8

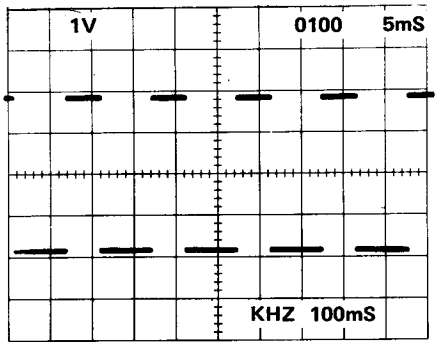

9

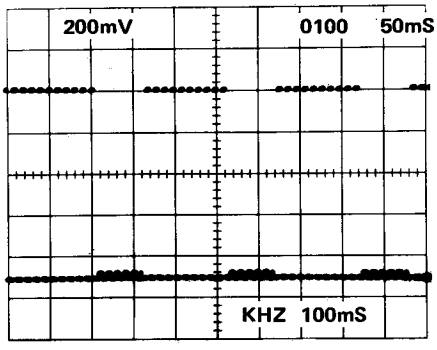

10

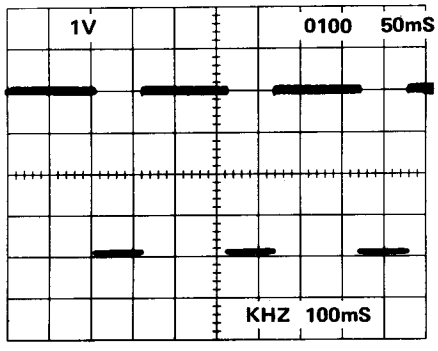

7D15

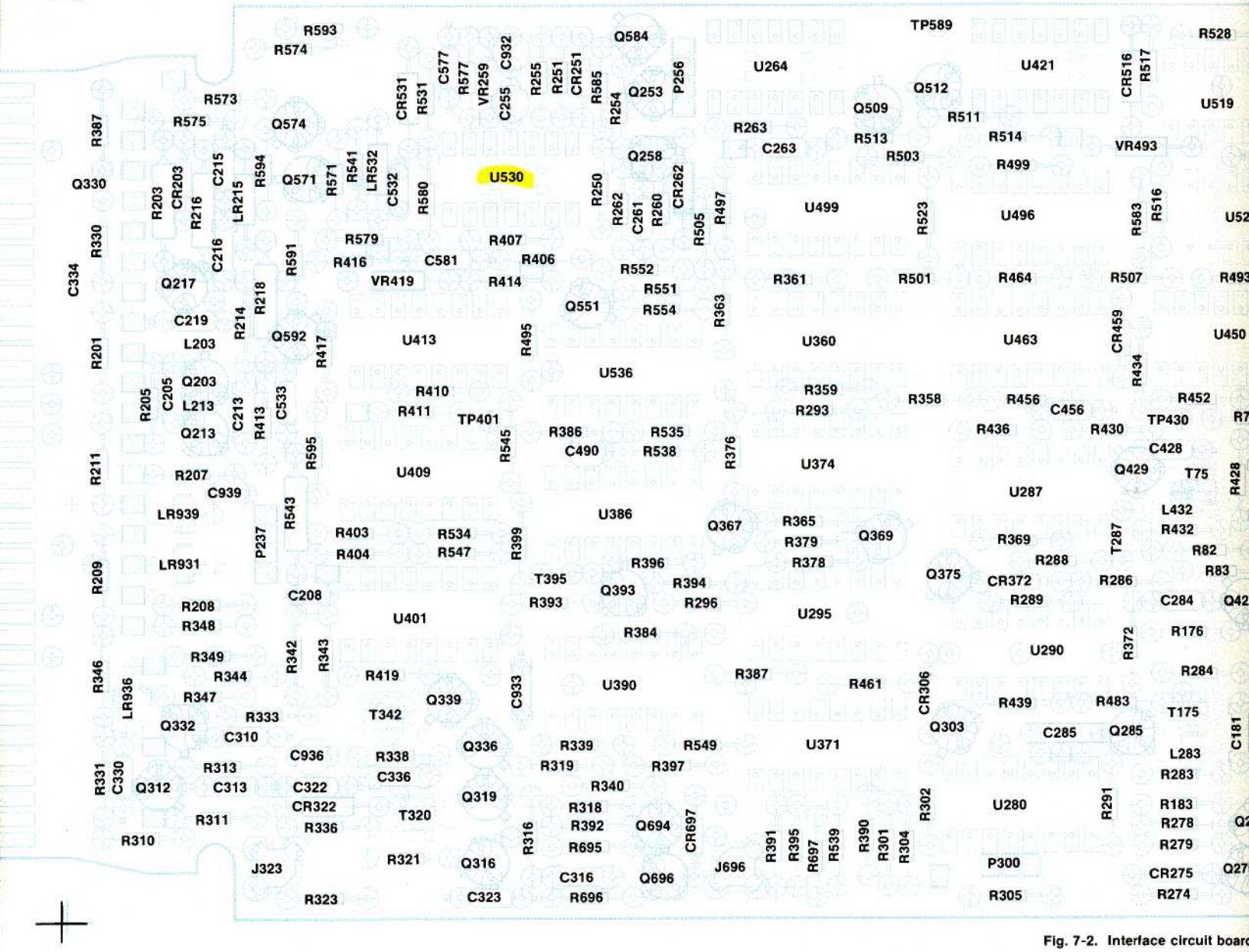

Fig. 7-2. Interface circuit board

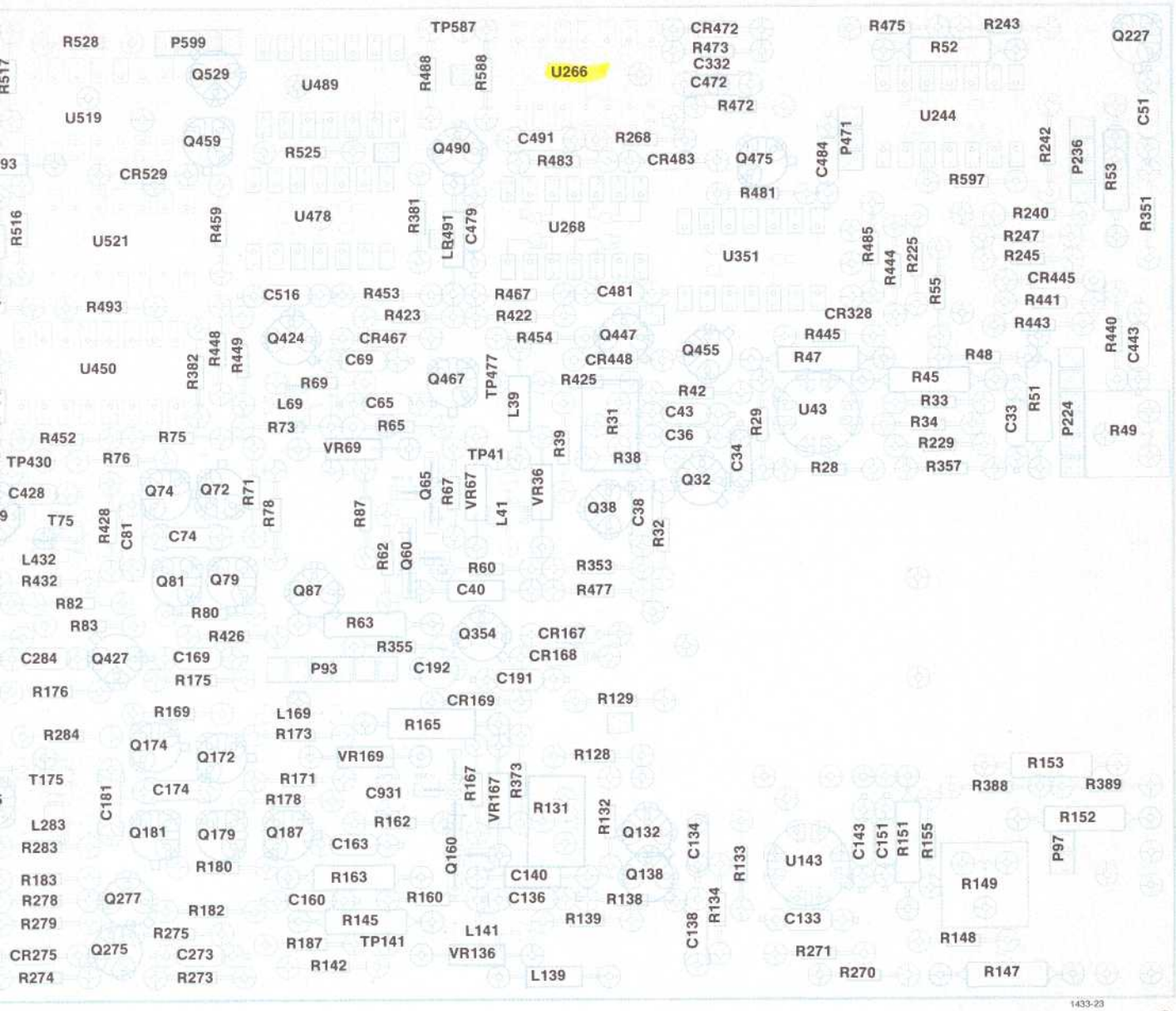

1433-23

lace circuit board.

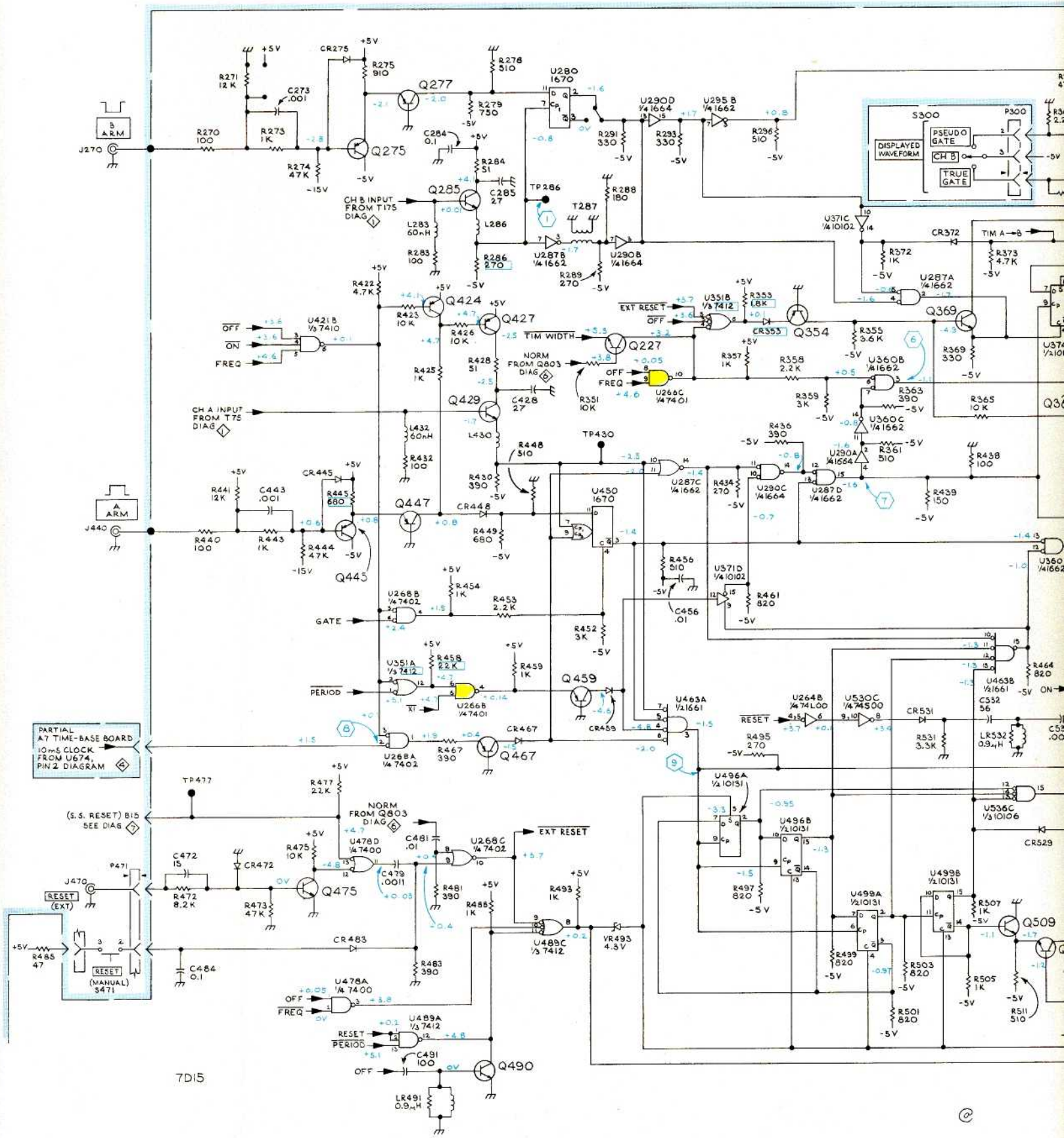

B ARM
J270
A ARM
J440
PARTIAL A7 TIME-BASE BOARD 10mS CLOCK FROM U674, PIN 2 DIAGRAM
(S.S. RESET) B15 SEE DIAG
RESET (EXT)
RESET (MANUAL) S471
J470
P471
CH B INPUT FROM T175 DIAG
CH A INPUT FROM T75 DIAG
OFF
ON
FREQ
GATE
PERIOD
TIM WIDTH
EXT RESET
NORM FROM Q803 DIAG
TIM A→B
S300
P300
DISPLAYED WAVEFORM
PSEUDO GATE
CH B
TRUE GATE
TP286
TP430
TP477
Q277
Q275
Q285
Q424
Q427
Q227
Q429
Q447
Q445
Q459
Q467
Q475
Q490
Q354
Q369
Q509
U280 1670
U290D 1/4 1664
U295 B 1/4 1662
U287B 1/4 1662
U290B 1/4 1664
U421B 1/3 7410
U351A 1/3 7412
U268B 1/4 7402
U266B 1/4 7401
U268A 1/4 7402
U450 1670
U287C 1/4 1662
U290C 1/4 1664
U287D 1/4 1662
U360B 1/4 1662
U360C 1/4 1662
U371C 1/4 10102
U371D 1/4 10102
U463A 1/2 1661
U264B 1/4 74L00
U530C 1/4 74S00
U496A 1/2 10131
U496B 1/2 10131
U499A 1/2 10131
U499B 1/2 10131
U536C 1/3 10106
U478D 1/4 7400
U268C 1/4 7402
U489C 1/3 7412
U478A 1/4 7400
U489A 1/3 7412
U287A 1/4 1662
U360 1/4 1662
U463B 1/2 1661
U266C 1/4 7401
U351B 1/3 7412
U518 1/3 7412
VR493 4.3V
LR491 0.9μH
LR532 0.9μH
7D15

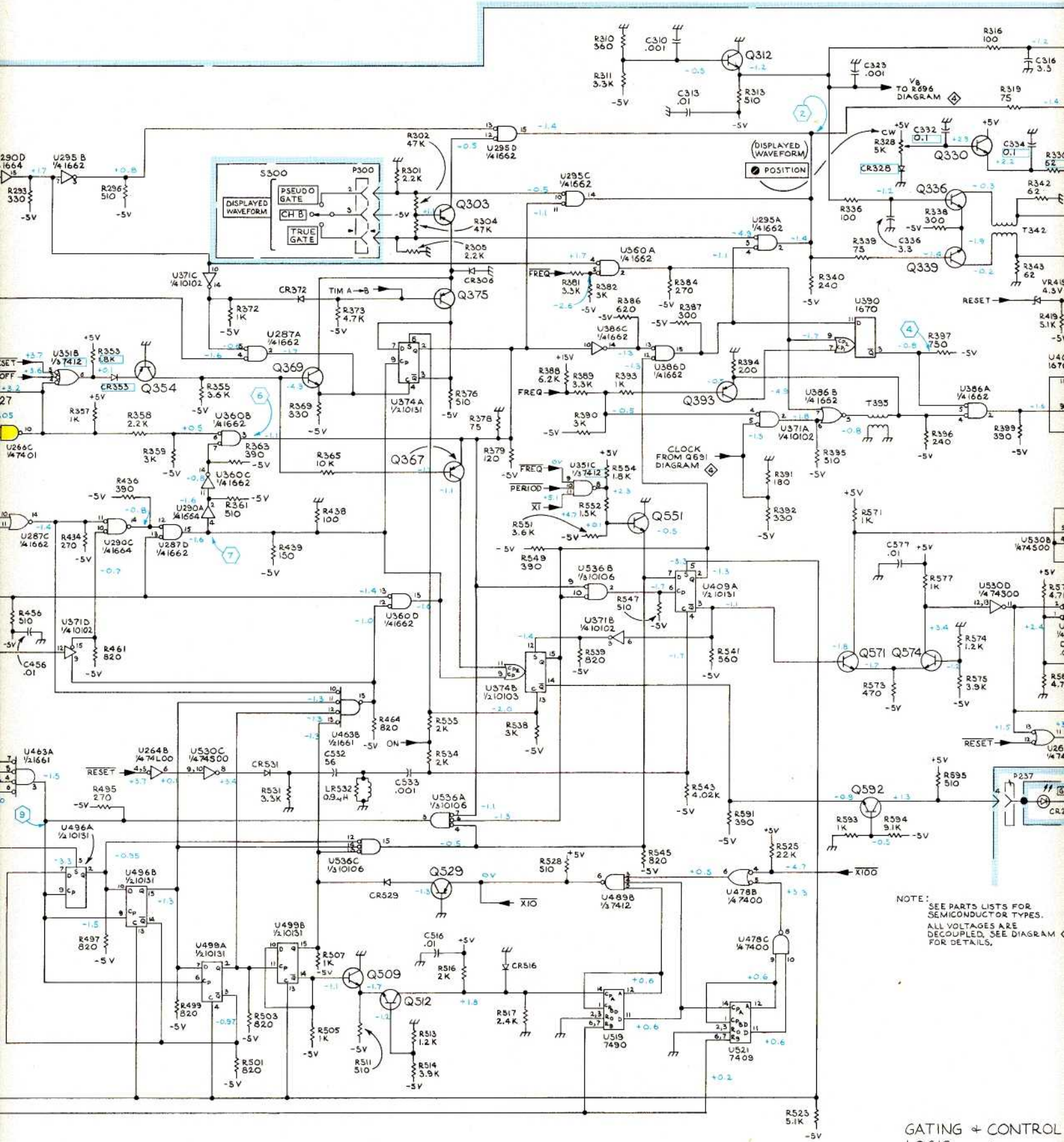

GATING & CONTROL LOGIC ◇2

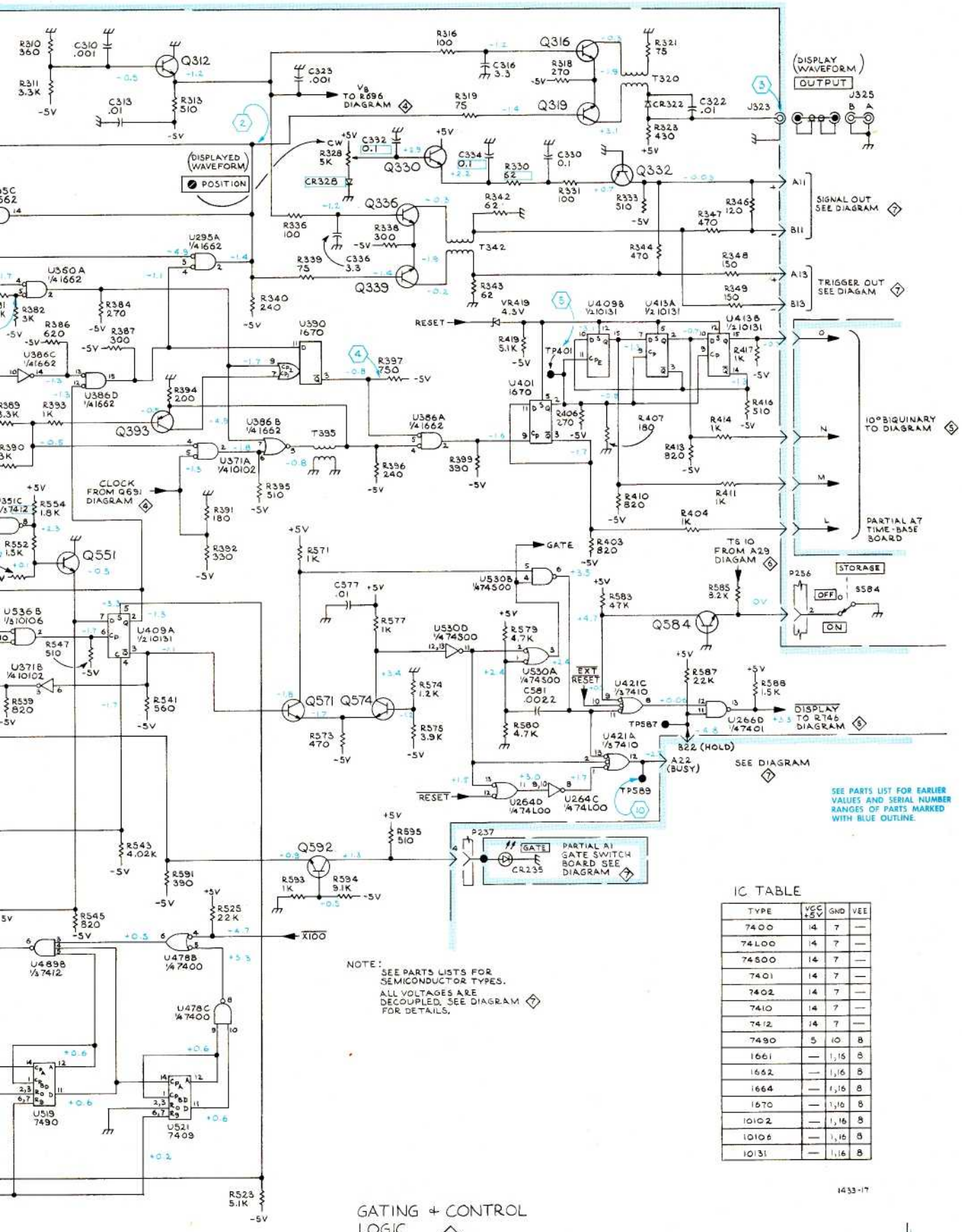

GATING & CONTROL LOGIC 2

774
R.E.C.

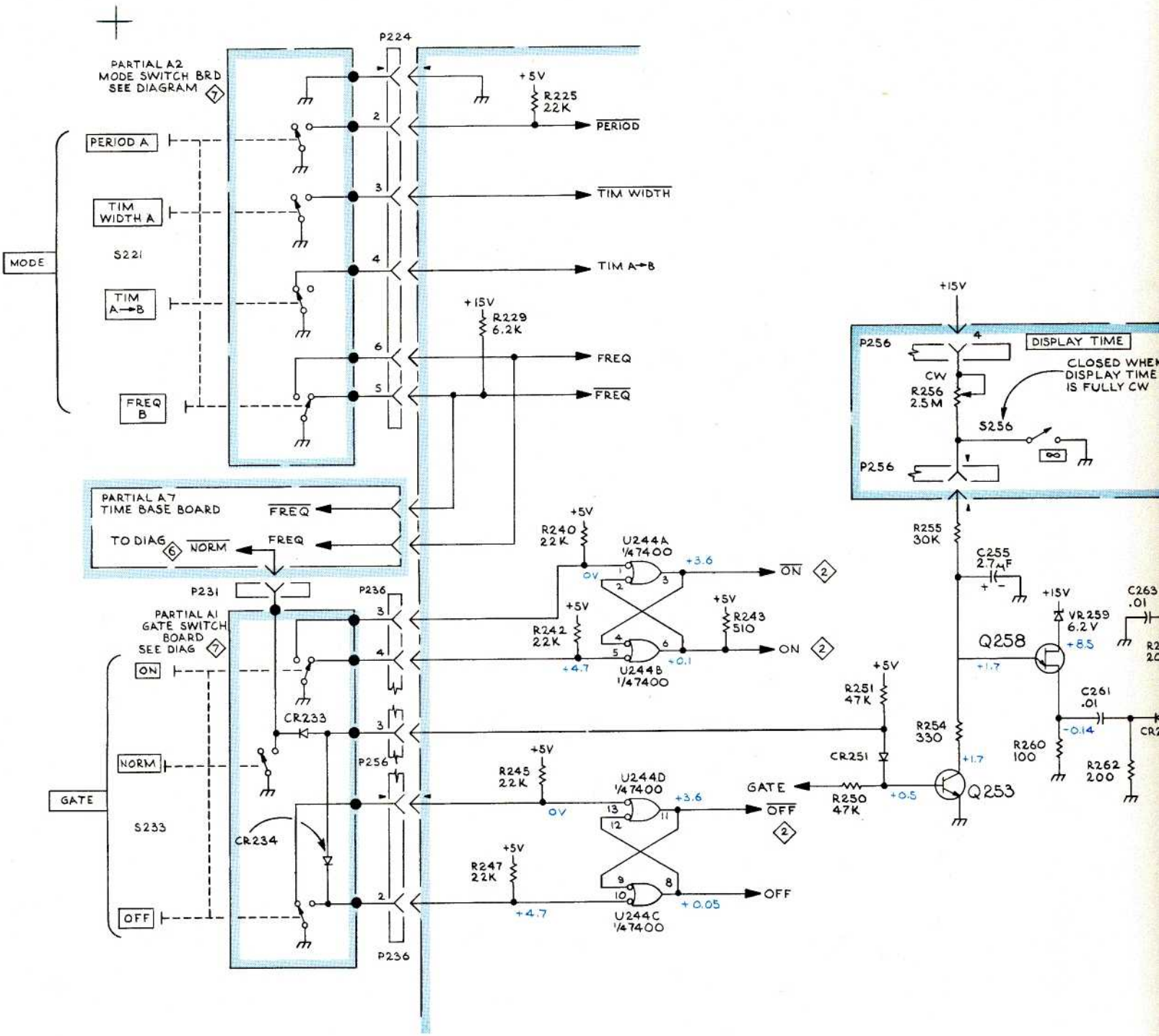
P224
PARTIAL A2
MODE SWITCH BRD
SEE DIAGRAM
7
+5V
R225
22K
PERIOD
PERIOD A
TIM WIDTH
TIM WIDTH A
TIM A→B
MODE
S221
TIM
A→B
+15V
R229
6.2K
FREQ
FREQ
FREQ
B
PARTIAL A7
TIME BASE BOARD
FREQ
TO DIAG
6
NORM
FREQ
P231
P236
PARTIAL A1
GATE SWITCH
BOARD
SEE DIAG
7
ON
NORM
GATE
S233
OFF
CR233
CR234
P256
P236
+5V
R240
22K
U244A
1/4 7400
+3.6
0V
ON
2
+5V
R242
22K
+4.7
U244B
1/4 7400
+0.1
+5V
R243
510
ON
2
+5V
R245
22K
0V
U244D
1/4 7400
+3.6
GATE
OFF
2
+5V
R247
22K
+4.7
U244C
1/4 7400
+0.05
OFF
+15V
P256
4
DISPLAY TIME
CW
R256
2.5M
CLOSED WHEN
DISPLAY TIME
IS FULLY CW
S256
P256
R255
30K
C255
2.7μF
+15V
VR259
6.2V
+8.5
C263
.01
Q258
+1.7
+5V
R251
47K
C261
.01
-0.14
R254
330
+1.7
R260
100
R262
200
CR251
GATE
R250
47K
+0.5
Q253

7D15

@

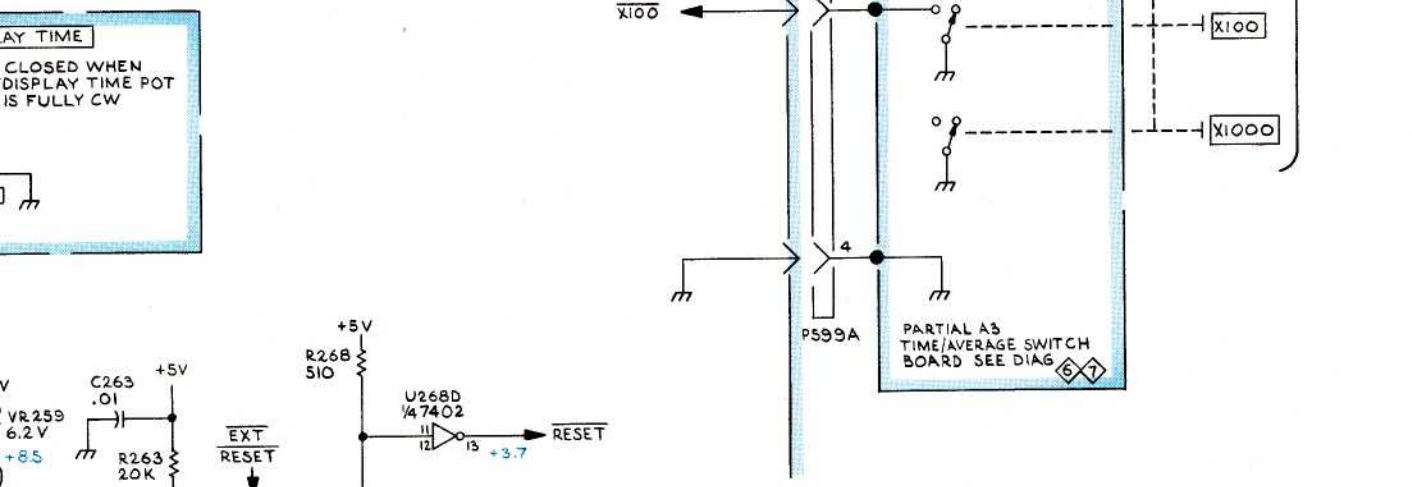

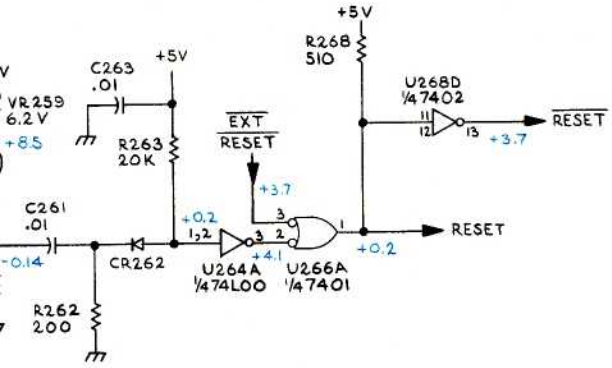

NOTES:
1. SEE PARTS LIST FOR SEMICONDUCTOR TYPES.
2. SEE TABLE ON DIAGRAM ◇2 FOR IC INFORMATION.
3. ALL VOLTAGES ARE DECOUPLED SEE DIAGRAM ◇7 FOR DETAILS.

SWITCHING ◇3

774
R.E.C.

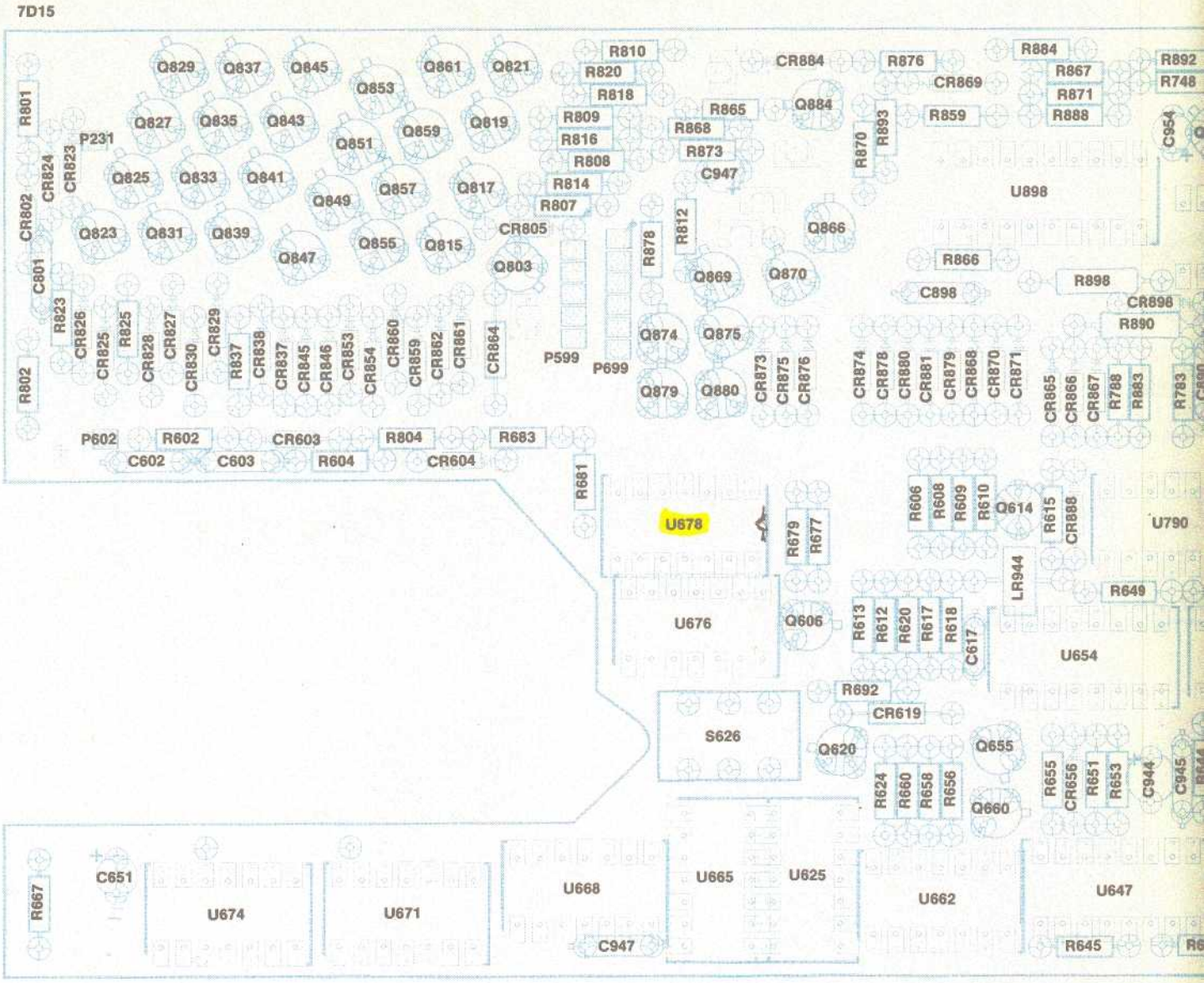

Fig. 7-3. Time-Base circu

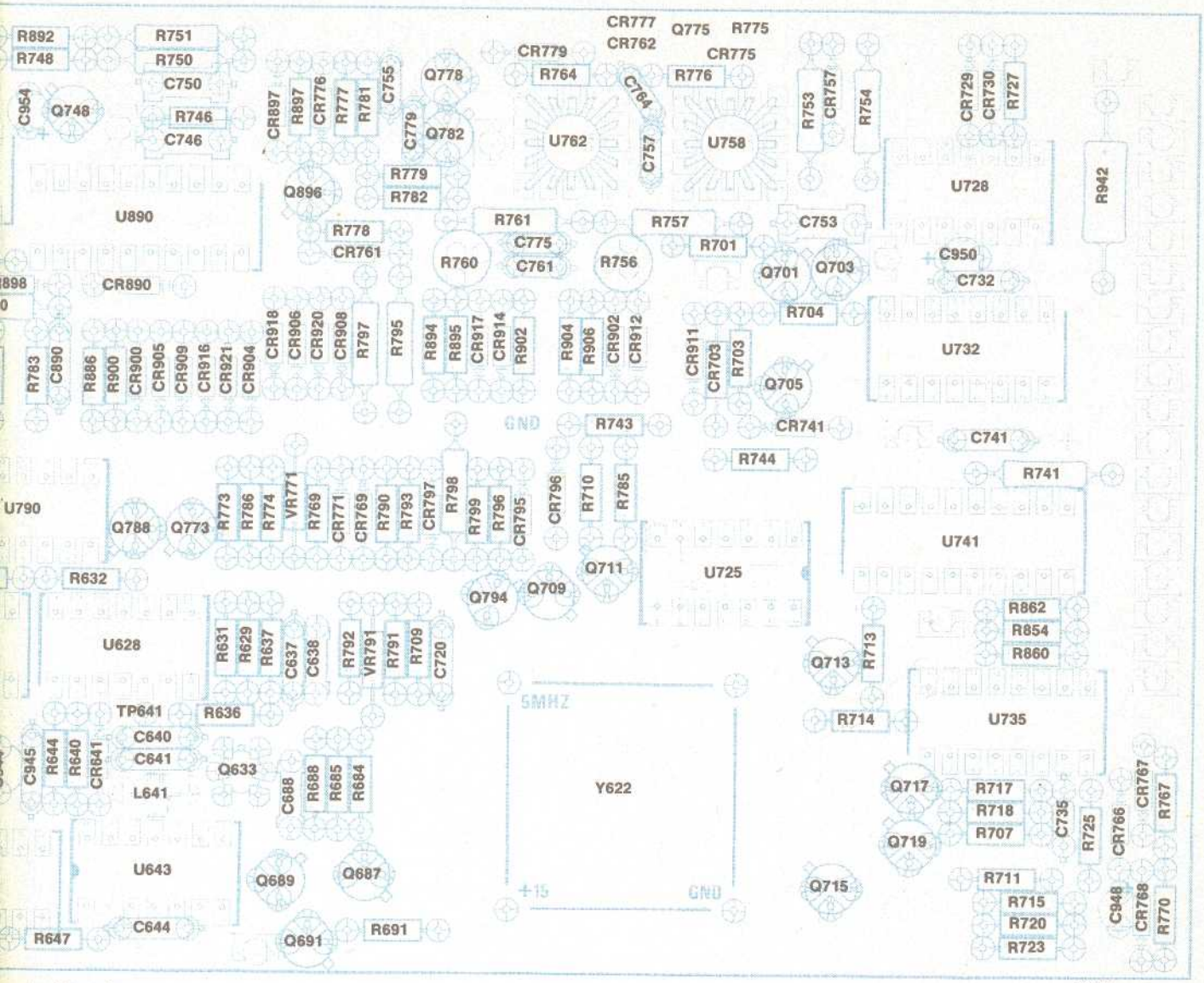

se circuit board.

1433-24

@

Digitally signed by □
http://www.aa4df.com

1

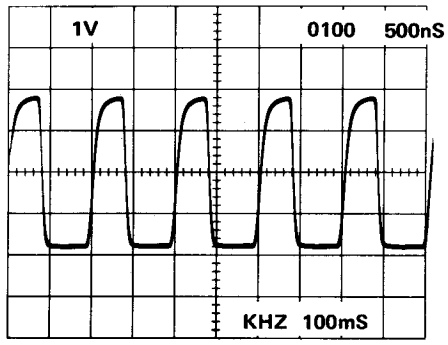
1V
0100
500nS
KHZ 100mS

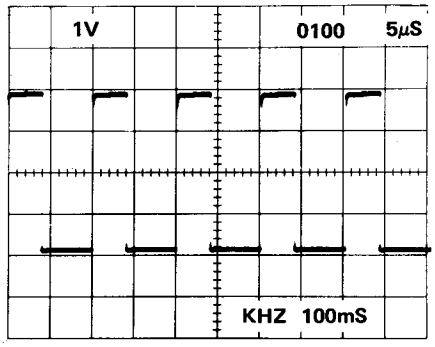
1V
0100
5µS
KHZ 100mS

2

3

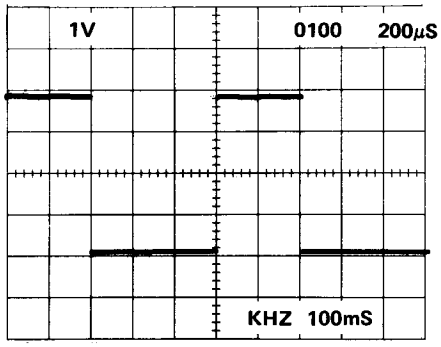
1V
0100
200µS
KHZ 100mS

4

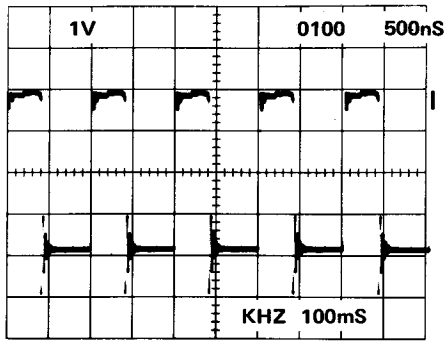
1V
0100
500nS
KHZ 100mS

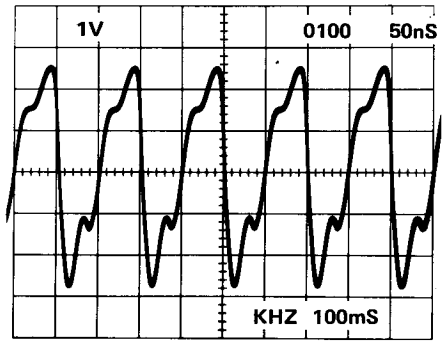
1V
0100
50nS
KHZ 100mS

5

6

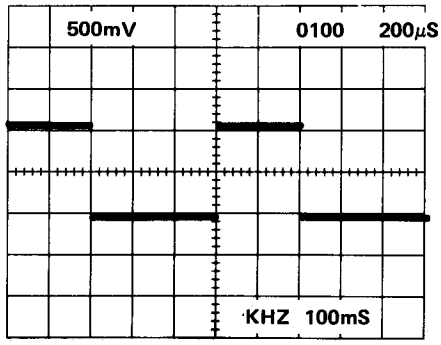
500mV
0100
200µS
KHZ 100mS

7

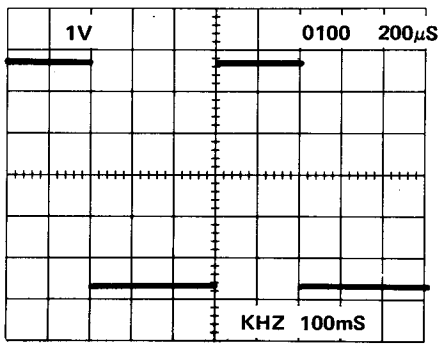
1V
0100
200µS
KHZ 100mS

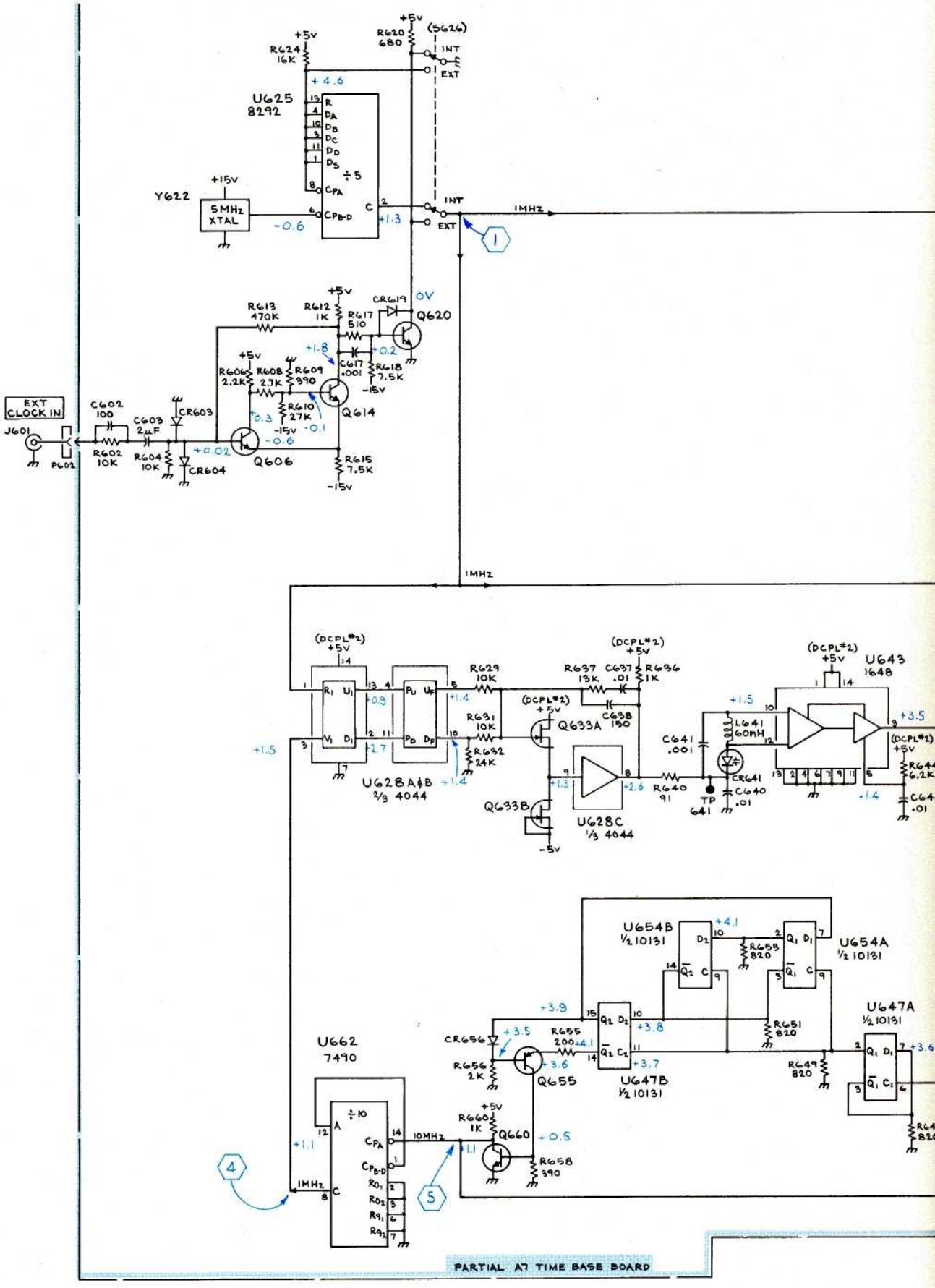
+5V
R620 680
(5626)
INT
EXT
R624 16K
+4.6
U625 8292
R
DA
DB
DC
DD
DS
÷5
CPA
CPB-D
C
+1.3
+15V
Y622
5MHz XTAL
-0.6
INT
EXT
1MHz
1
R613 470K
R612 1K
R617 510
CR619
0V
Q620
+0.2
+1.8
C617 .001
R618 7.5K
-15V
R606 2.2K
R608 2.7K
R609 390
R610 27K
Q614
-0.3
-0.1
-0.6
EXT CLOCK IN
J601
P602
C602 100
R602 10K
C603 2μF
R604 10K
CR603
CR604
+0.02
Q606
R615 7.5K
-15V
1MHz
(DCPL*2)
+5V
U628A&B 2/3 4044
R629 10K
R631 10K
R632 24K
+1.4
+0.9
+2.7
+1.5
R637 13K
C637 .01
R636 1K
C638 150
Q633A
Q633B
-5V
U628C 1/3 4044
+2.6
R640 91
C641 .001
L641 60nH
CR641
TP 641
C640 .01
U643 1648
+3.5
R644 6.2K
C644 .01
U654B 1/2 10131
+4.1
R653 820
U654A 1/2 10131
U647A 1/2 10131
+3.9
+3.8
R651 820
CR656
+3.5
R655 200
R656 2K
+3.6
Q655
U647B 1/2 10131
+3.7
R649 820
+3.6
U662 7490
÷10
+5V
R660 1K
Q660
+0.5
10MHz
+1.1
R658 390
4
5
PARTIAL A7 TIME BASE BOARD
ALL VOLTAGES ARE DECOUPLED
SEE 7 FOR DETAILS.

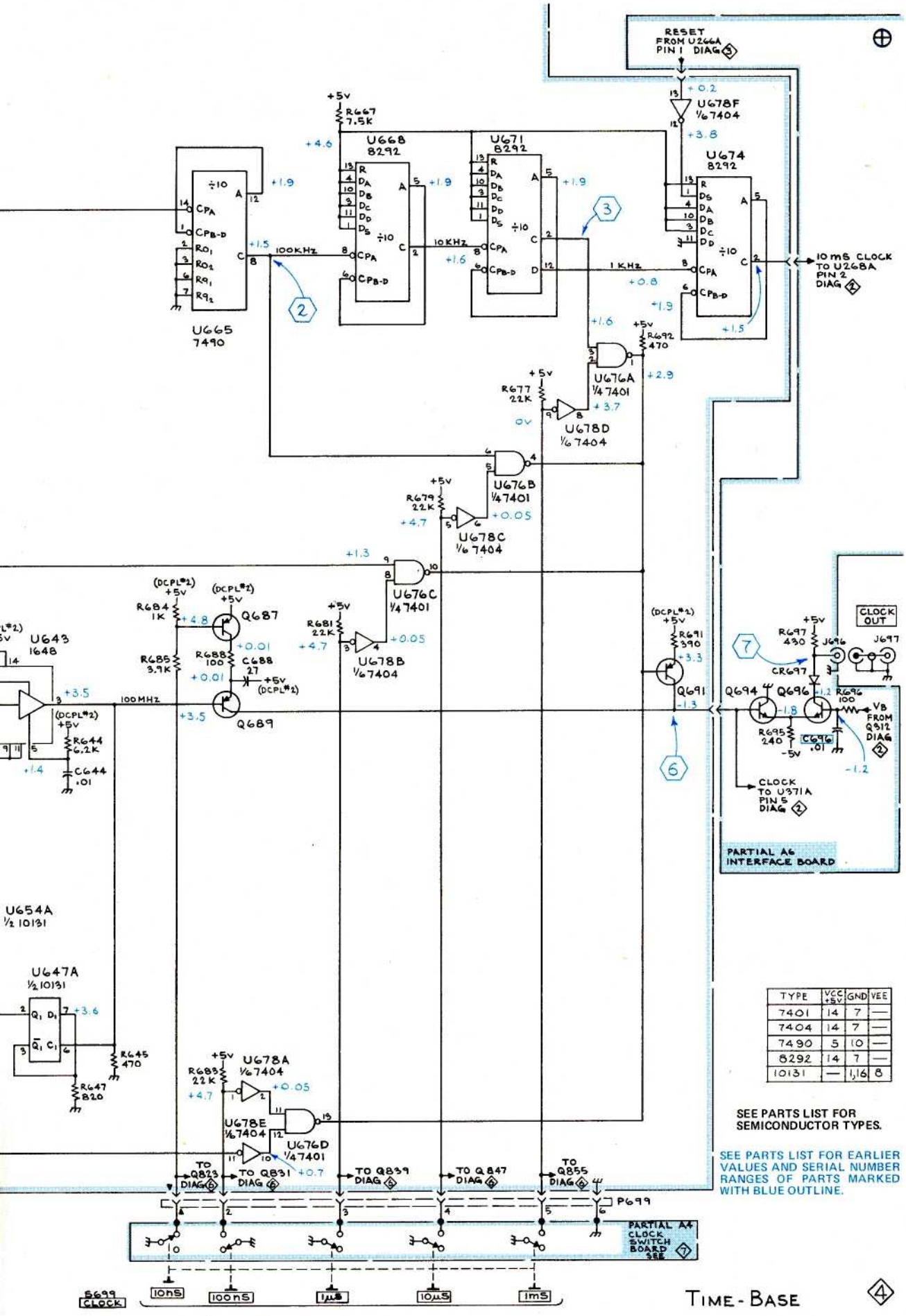

TYPE	VCC +5V	GND	VEE
7401	14	7	—
7404	14	7	—
7490	5	10	—
8292	14	7	—
10131	—	1,16	8

SEE PARTS LIST FOR SEMICONDUCTOR TYPES.

SEE PARTS LIST FOR EARLIER VALUES AND SERIAL NUMBER RANGES OF PARTS MARKED WITH BLUE OUTLINE.

TIME-BASE 4

1

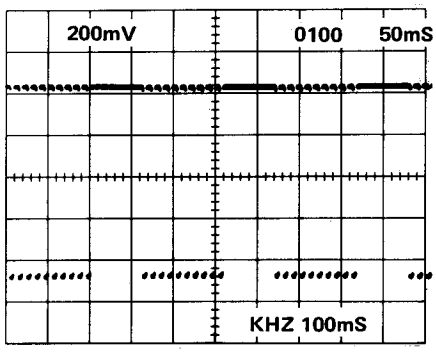
200mV
0100
50mS
KHZ 100mS

2

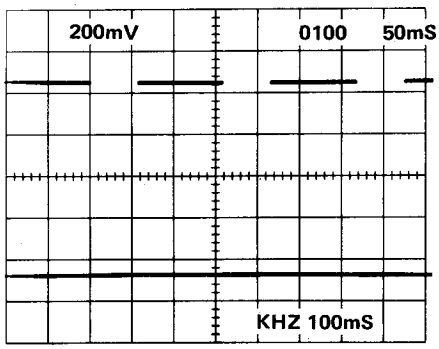
200mV
0100
50mS
KHZ 100mS

3

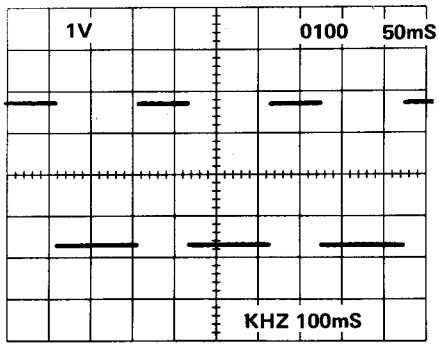
1V
0100
50mS
KHZ 100mS

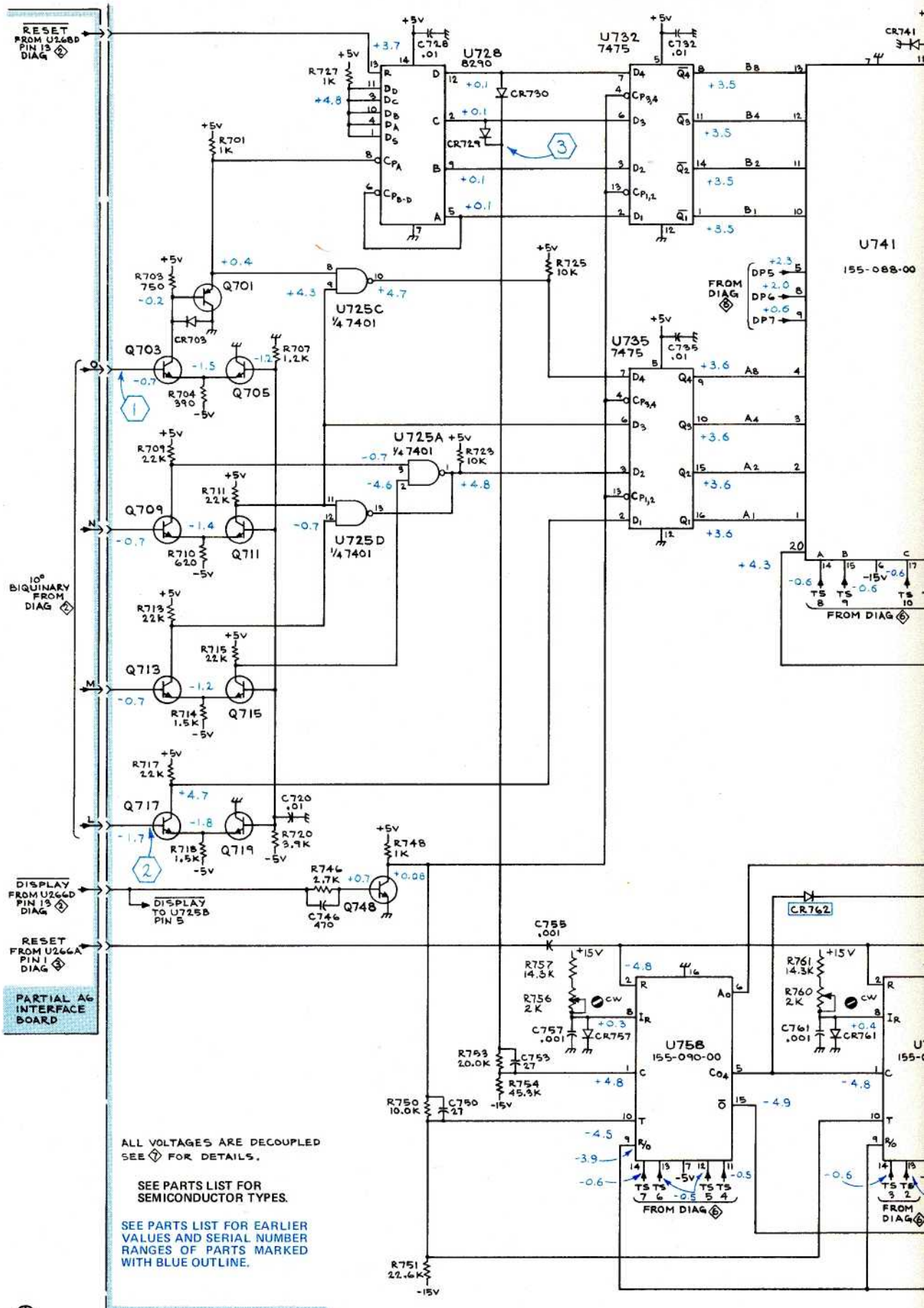
RESET FROM U26BD PIN 13 DIAG 2
+5V
C728 .01
U728 8290
R727 1K
+4.8
+3.7
+0.1
CR730
CR729
3
R701 1K
+0.4
R703 750
-0.2
Q701
CR703
+4.3
U725C 1/4 7401
+4.7
U732 7475
C732 .01
+3.5
R725 10K
FROM DIAG 6
DP5
DP6
DP7
+2.3
+2.0
+0.6
U741
155-088-00
U735 7475
C735 .01
+3.6
Q703
-1.5
-0.7
R704 390
-5V
Q705
-1.2
R707 1.2K
1
M
R709 22K
R711 22K
Q709
-1.4
R710 620
Q711
U725A 1/4 7401
R723 10K
-0.7
-4.6
+4.8
U725D 1/4 7401
-0.7
10° BIQUINARY FROM DIAG 2
R713 22K
R715 22K
Q713
-1.2
R714 1.5K
Q715
L
R717 22K
+4.7
Q717
-1.8
-1.7
R718 1.5K
Q719
C720 .01
R720 3.9K
2
R748 1K
+0.08
R746 2.7K
+0.7
C746 470
Q748
DISPLAY FROM U26GD PIN 13 DIAG 2
DISPLAY TO U725B PIN 5
RESET FROM U26GA PIN 1 DIAG 3
PARTIAL AG INTERFACE BOARD
C755 .001
+15V
R757 14.3K
R756 2K
CW
C757 .001
+0.3
CR757
U758 155-090-00
-4.8
R753 20.0K
C753 27
R754 45.3K
-15V
+4.8
R750 10.0K
C750 27
-4.5
-3.9
-0.6
-4.9
-0.5
FROM DIAG 6
CR762
R761 14.3K
R760 2K
C761 .001
+0.4
CR761
-0.6
FROM DIAG 6
R751 22.6K
-15V
ALL VOLTAGES ARE DECOUPLED SEE 7 FOR DETAILS.
SEE PARTS LIST FOR SEMICONDUCTOR TYPES.
SEE PARTS LIST FOR EARLIER VALUES AND SERIAL NUMBER RANGES OF PARTS MARKED WITH BLUE OUTLINE.
PARTIAL A7 TIME-BASE BOARD

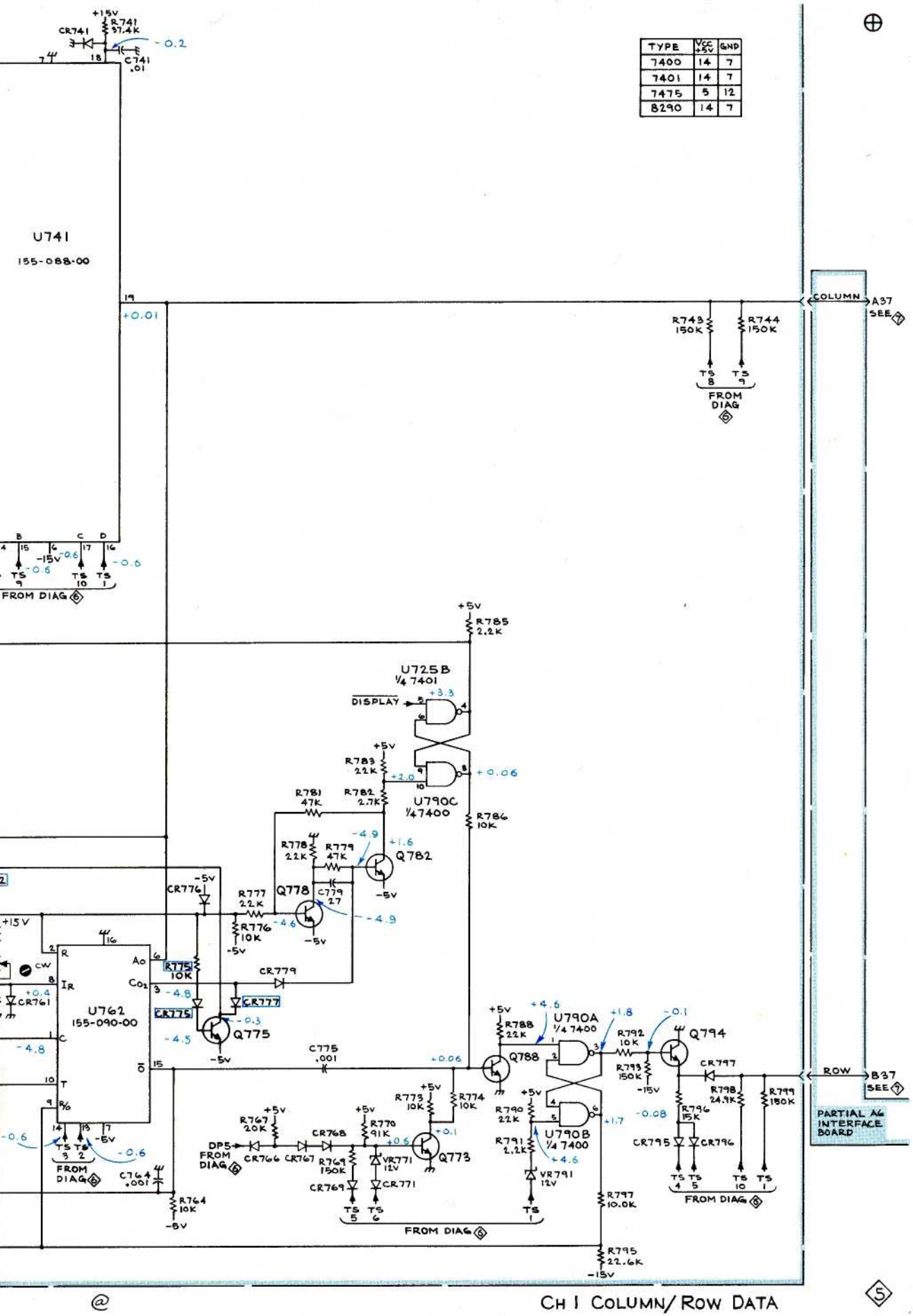

CH 1 COLUMN/ROW DATA

5

@

CH 1 COLUMN/ROW DATA

5

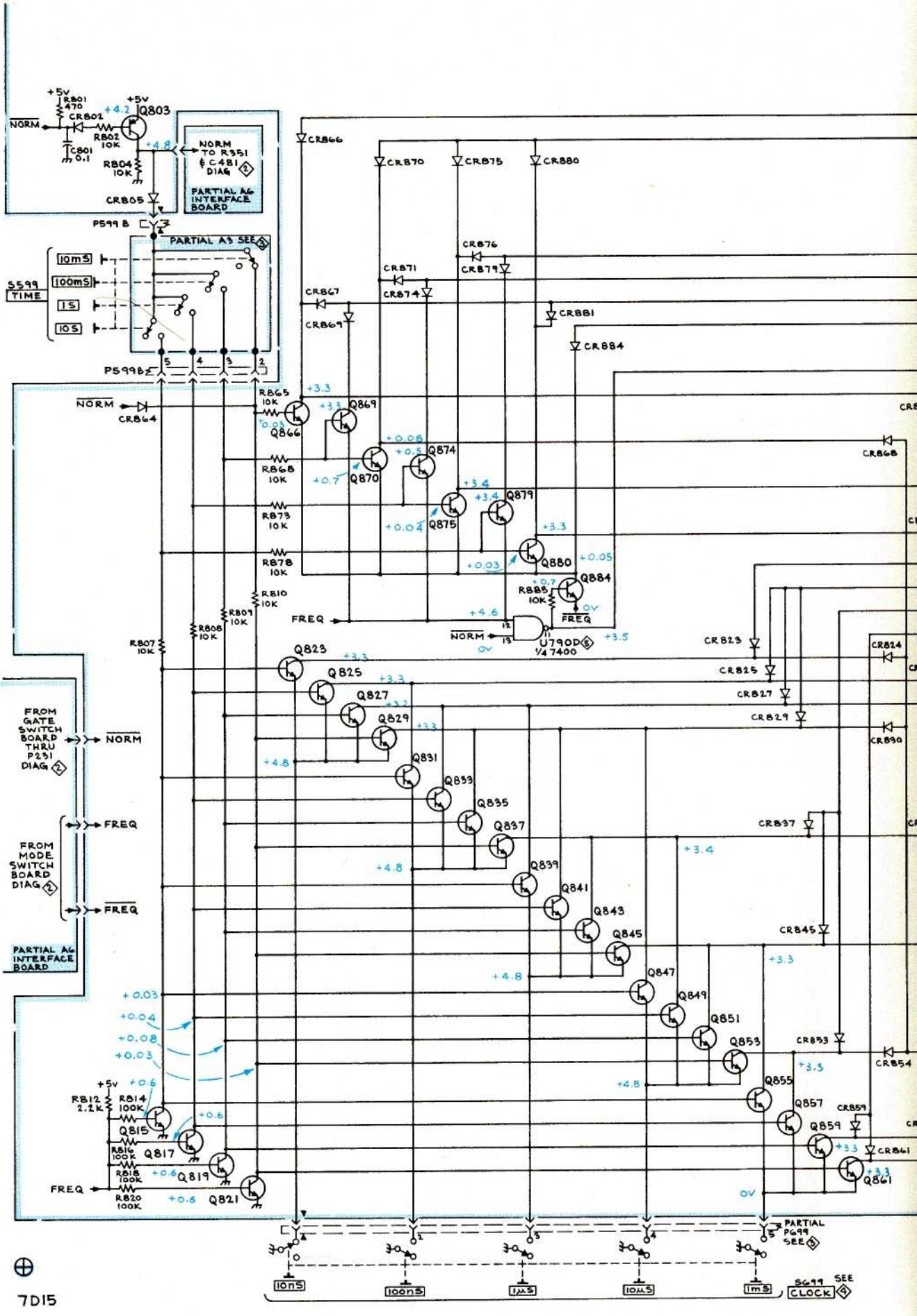

NORM
+5V
R801 470
CR802
+4.2
Q803
R802 10K
C801 0.1
+4.8
R804 10K
NORM TO R351 & C481 DIAG 2
PARTIAL A6 INTERFACE BOARD
CR805
P599 B
PARTIAL A3 SEE 3
S599 TIME
10mS
100mS
1S
10S
P599B
CR866
CR870
CR875
CR880
CR876
CR879
CR871
CR874
CR867
CR869
CR881
CR884
R865 10K
Q866
Q869
Q870
Q874
Q875
Q879
Q880
Q884
R868 10K
R873 10K
R878 10K
R885 10K
FREQ
U790D 1/4 7400
R810 10K
R809 10K
R808 10K
R807 10K
CR868
CR823
CR824
CR825
CR827
CR829
CR830
Q823
Q825
Q827
Q829
Q831
Q833
Q835
Q837
Q839
Q841
Q843
Q845
Q847
Q849
Q851
Q853
Q855
Q857
Q859
Q861
CR837
CR845
CR853
CR854
CR859
CR861
FROM GATE SWITCH BOARD THRU P231 DIAG 2
FROM MODE SWITCH BOARD DIAG 2
PARTIAL A6 INTERFACE BOARD
R812 2.2K
R814 100K
Q815
R816 100K
Q817
R818 100K
Q819
R820 100K
Q821
PARTIAL P699 SEE 3
10nS
100nS
1μS
10μS
1mS
S699 CLOCK SEE 4

7D15

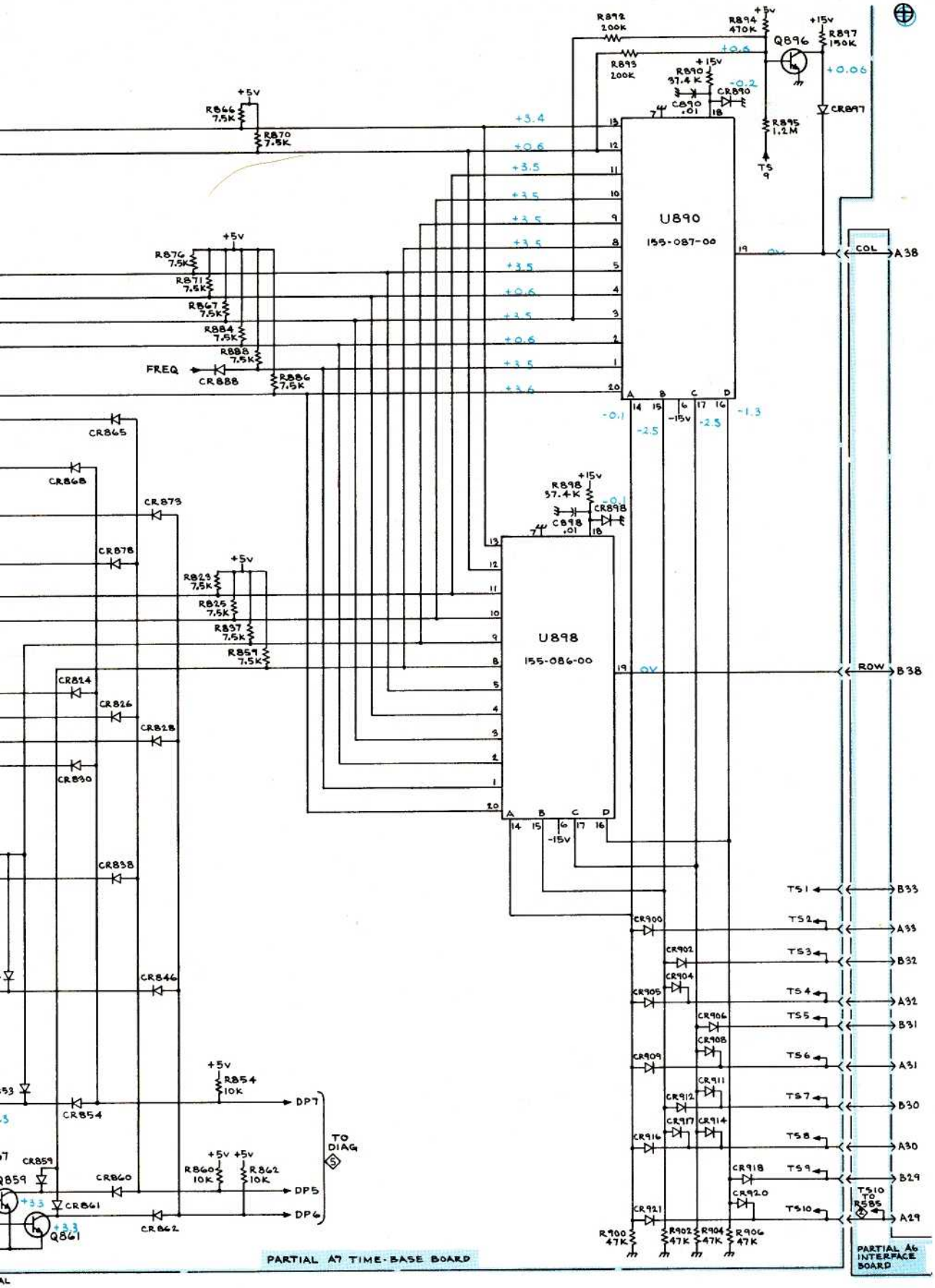

ALL VOLTAGES ARE DECOUPLED
SEE 7 FOR DETAILS.

SEE PARTS LIST FOR SEMICONDUCTOR TYPES.

CH 2 COLUMN/ROW DATA 6

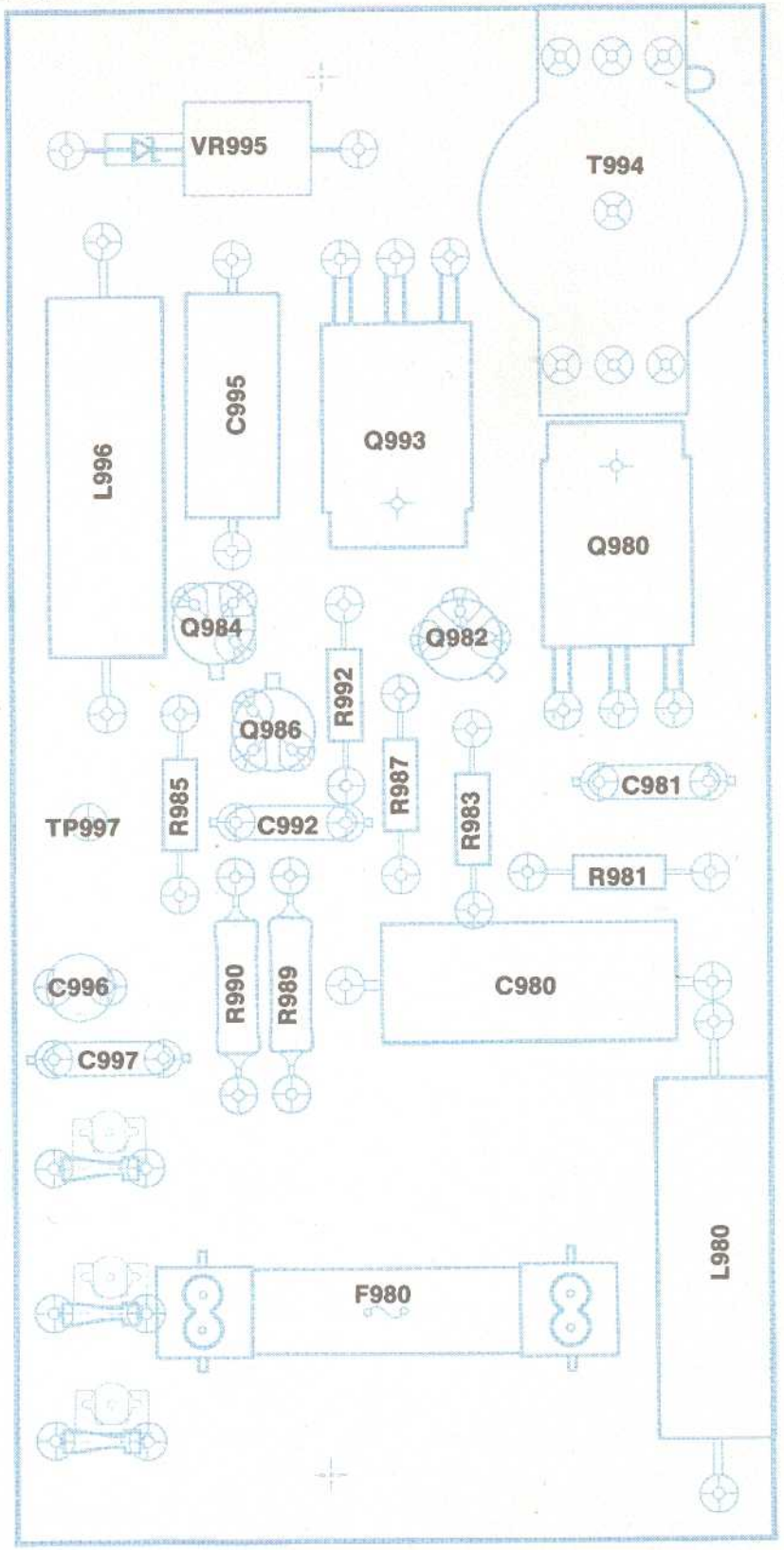

Fig. 7-4. A8 Power Supply circuit board.

1

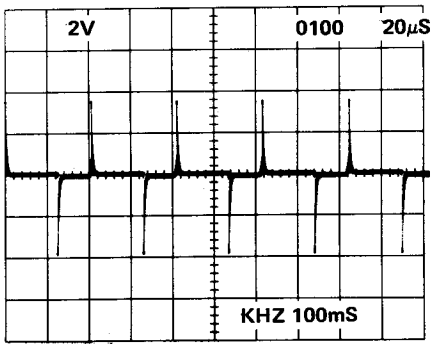
2V
0100
20µS
KHZ 100mS

2

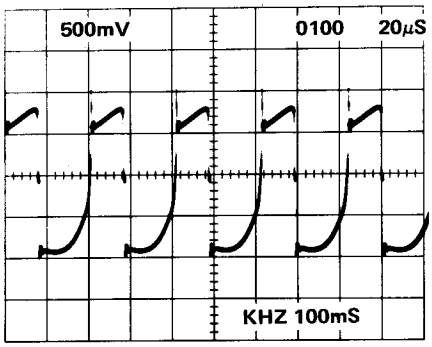
500mV
0100
20µS
KHZ 100mS

3

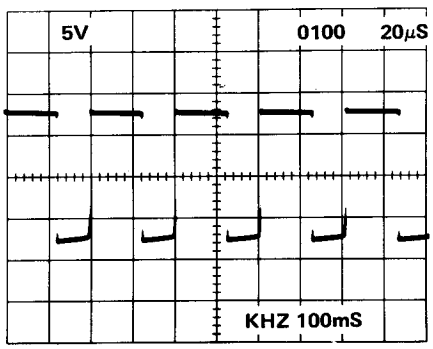
5V
0100
20µS
KHZ 100mS

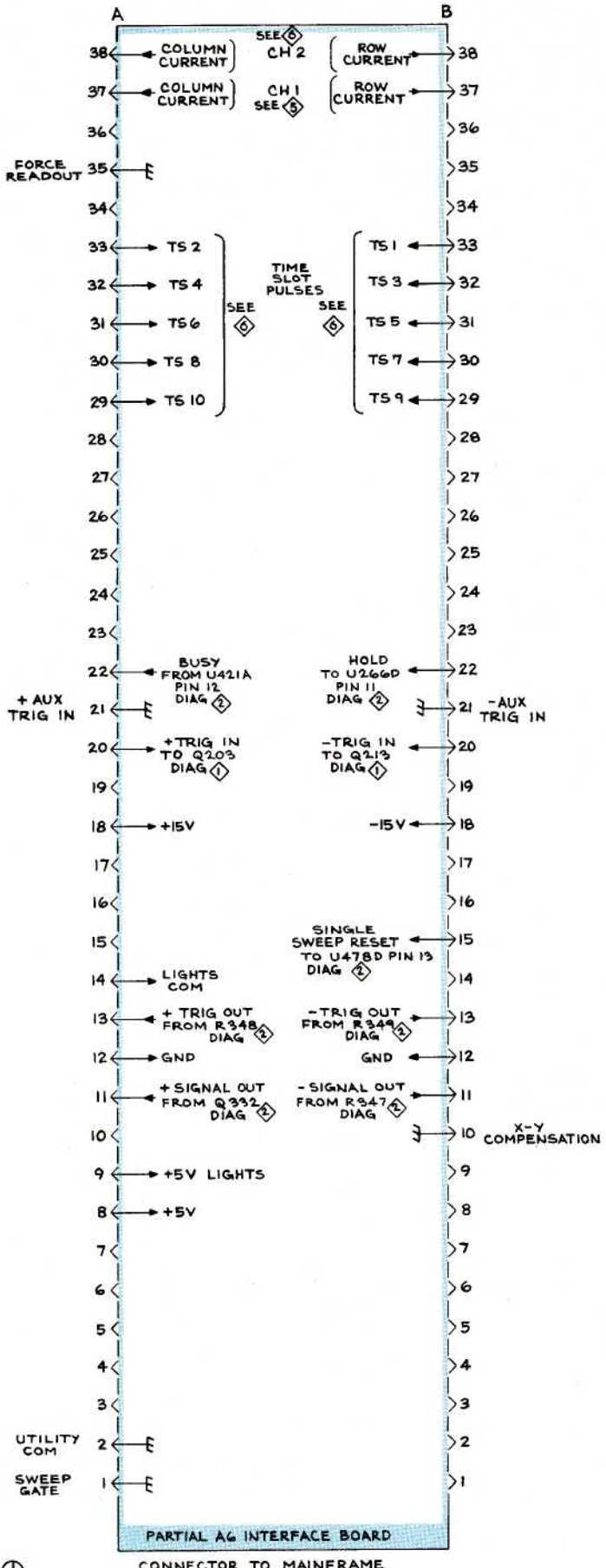
A
B
SEE 6
CH 2
COLUMN CURRENT
ROW CURRENT
CH 1
SEE 5
FORCE READOUT
TS 2
TS 4
TS 6
TS 8
TS 10
TIME SLOT PULSES
SEE 6
SEE 6
TS 1
TS 3
TS 5
TS 7
TS 9
BUSY FROM U421A PIN 12 DIAG 2
HOLD TO U266D PIN 11 DIAG 2
+ AUX TRIG IN
-AUX TRIG IN
+TRIG IN TO Q203 DIAG 1
-TRIG IN TO Q213 DIAG 1
+15V
-15V
SINGLE SWEEP RESET TO U478D PIN 13 DIAG 2
LIGHTS COM
+ TRIG OUT FROM R348 DIAG 2
-TRIG OUT FROM R349 DIAG 2
GND
GND
+ SIGNAL OUT FROM Q332 DIAG 2
- SIGNAL OUT FROM R347 DIAG 2
X-Y COMPENSATION
+5V LIGHTS
+5V
UTILITY COM
SWEEP GATE
PARTIAL AG INTERFACE BOARD
CONNECTOR TO MAINFRAME

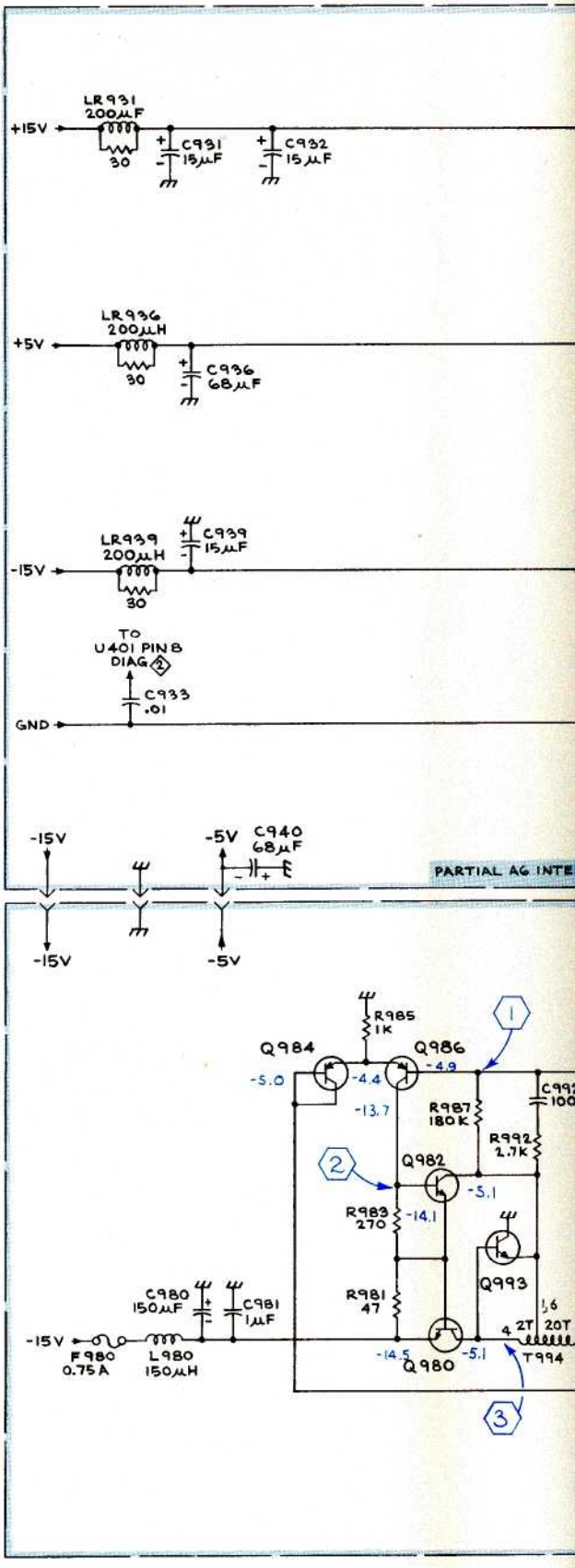
LR931 200µF
+15V
30
C931 15µF
C932 15µF
LR936 200µH
+5V
30
C936 68µF
LR939 200µH
C939 15µF
-15V
30
TO U401 PIN 8 DIAG 2
C933 .01
GND
-15V
-5V C940 68µF
PARTIAL AG INTE
-15V
-5V
R985 1K
Q984
Q986
-5.0
-4.4
-4.9
-13.7
R987 180K
R992 2.7K
Q982
-5.1
R983 270
-14.1
Q993
R981 47
C980 150µF
C981 1µF
-15V
F980 0.75A
L980 150µH
-14.5
Q980
-5.1
T994
1
2
3

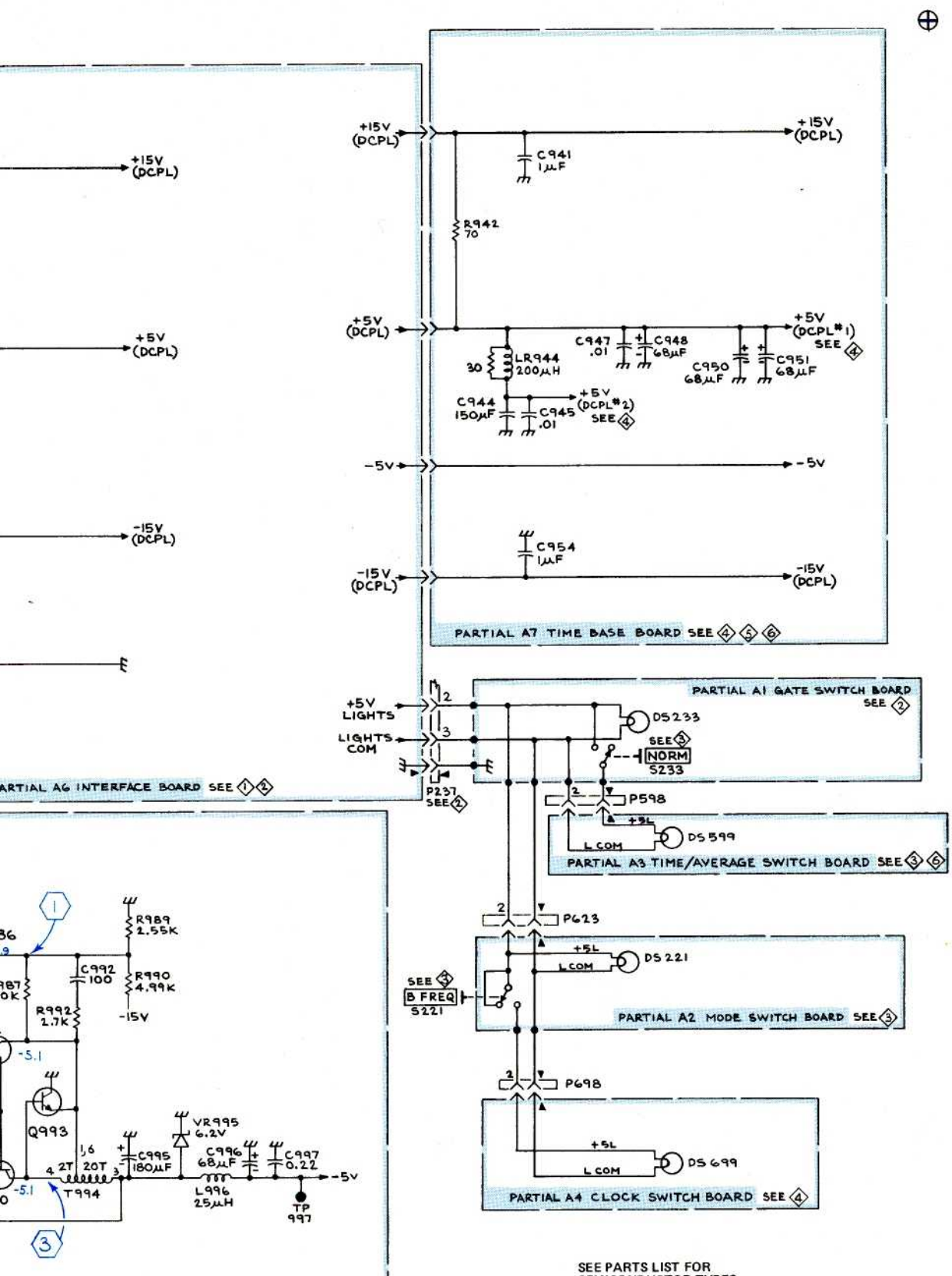

SEE PARTS LIST FOR SEMICONDUCTOR TYPES.

POWER DISTRIBUTION & MAINFRAME CONNECTOR ◇7

REPLACEABLE MECHANICAL PARTS

PARTS ORDERING INFORMATION

Replacement parts are available from or through your local Tektronix, Inc. Field Office or representative.

Changes to Tektronix instruments are sometimes made to accommodate improved components as they become available, and to give you the benefit of the latest circuit improvements developed in our engineering department. It is therefore important, when ordering parts, to include the following information in your order: Part number, instrument type or number, serial number, and modification number if applicable.

If a part you have ordered has been replaced with a new or improved part, your local Tektronix, Inc. Field Office or representative will contact you concerning any change in part number.

Change information, if any, is located at the rear of this manual.

SPECIAL NOTES AND SYMBOLS

X000	Part first added at this serial number
00X	Part removed after this serial number

FIGURE AND INDEX NUMBERS

Items in this section are referenced by figure and index numbers to the illustrations.

INDENTATION SYSTEM

This mechanical parts list is indented to indicate item relationships. Following is an example of the indentation system used in the description column.

1 2 3 4 5 *Name & Description*

Assembly and/or Component
Attaching parts for Assembly and/or Component
- - - * - - -
Detail Part of Assembly and/or Component
Attaching parts for Detail Part
- - - * - - -
Parts of Detail Part
Attaching parts for Parts of Detail Part
- - - * - - -

Attaching Parts always appear in the same indentation as the item it mounts, while the detail parts are indented to the right. Indented items are part of, and included with, the next higher indentation. The separation symbol - - - * - - - indicates the end of attaching parts.

Attaching parts must be purchased separately, unless otherwise specified.

ITEM NAME

In the Parts List, an Item Name is separated from the description by a colon (:). Because of space limitations, an Item Name may sometimes appear as incomplete. For further Item Name identification, the U.S. Federal Cataloging Handbook H6-1 can be utilized where possible.

ABBREVIATIONS

"	INCH
#	NUMBER SIZE
ACTR	ACTUATOR
ADPTR	ADAPTER
ALIGN	ALIGNMENT
AL	ALUMINUM
ASSEM	ASSEMBLED
ASSY	ASSEMBLY
ATTEN	ATTENUATOR
AWG	AMERICAN WIRE GAGE
BD	BOARD
BRKT	BRACKET
BRS	BRASS
BRZ	BRONZE
BSHG	BUSHING
CAB	CABINET
CAP	CAPACITOR
CER	CERAMIC
CHAS	CHASSIS
CKT	CIRCUIT
COMP	COMPOSITION
CONN	CONNECTOR
COV	COVER
CPLG	COUPLING
CRT	CATHODE RAY TUBE
DEG	DEGREE
DWR	DRAWER
ELCTRN	ELECTRON
ELEC	ELECTRICAL
ELCTLT	ELECTROLYTIC
ELEM	ELEMENT
EPL	ELECTRICAL PARTS LIST
EQPT	EQUIPMENT
EXT	EXTERNAL
FIL	FILLISTER HEAD
FLEX	FLEXIBLE
FLH	FLAT HEAD
FLTR	FILTER
FR	FRAME or FRONT
FSTNR	FASTENER
FT	FOOT
FXD	FIXED
GSKT	GASKET
HDL	HANDLE
HEX	HEXAGON
HEX HD	HEXAGONAL HEAD
HEX SOC	HEXAGONAL SOCKET
HLCPS	HELICAL COMPRESSION
HLEXT	HELICAL EXTENSION
HV	HIGH VOLTAGE
IC	INTEGRATED CIRCUIT
ID	INSIDE DIAMETER
IDENT	IDENTIFICATION
IMPLR	IMPELLER
IN	INCH
INCAND	INCANDESCENT
INSUL	INSULATOR
INTL	INTERNAL
LPHLDR	LAMPHOLDER
MACH	MACHINE
MECH	MECHANICAL
MTG	MOUNTING
NIP	NIPPLE
NON WIRE	NOT WIRE WOUND
OBD	ORDER BY DESCRIPTION
OD	OUTSIDE DIAMETER
OVH	OVAL HEAD
PH BRZ	PHOSPHOR BRONZE
PL	PLAIN or PLATE
PLSTC	PLASTIC
PN	PART NUMBER
PNH	PAN HEAD
PWR	POWER
RCPT	RECEPTACLE
RES	RESISTOR
RGD	RIGID
RLF	RELIEF
RTNR	RETAINER
SCH	SOCKET HEAD
SCOPE	OSCILLOSCOPE
SCR	SCREW
SE	SINGLE END
SECT	SECTION
SEMICOND	SEMICONDUCTOR
SHLD	SHIELD
SHLDR	SHOULDERED
SKT	SOCKET
SL	SLIDE
SLFLKG	SELF-LOCKING
SLVG	SLEEVING
SPR	SPRING
SQ	SQUARE
SST	STAINLESS STEEL
STL	STEEL
SW	SWITCH
T	TUBE
TERM	TERMINAL
THD	THREAD
THK	THICK
TNSN	TENSION
TPG	TAPPING
TRH	TRUSS HEAD
V	VOLTAGE
VAR	VARIABLE
W/	WITH
WSHR	WASHER
XFMR	TRANSFORMER
XSTR	TRANSISTOR

CROSS INDEX MFR. CODE NUMBER TO MANUFACTURER

MFR.CODE	MANUFACTURER	ADDRESS	CITY,STATE,ZIP
00779	AMP, Inc.	P. O. Box 3608	Harrisburg, PA 17105
08261	Spectra-Strip Corp.	7100 Lampson Ave.	Garden Grove, CA 92642
09353	C and K Components, Inc.	103 Morse Street	Watertown, MA 02172
13257	Amerace Ltd.	10 Esna Park Dr.	Markham, Ontario, Canada
22526	Berg Electronics, Inc.	Youk Expressway	New Cumberland, PA 17070
23499	Gavitt Wire and Cable, Division of RSC Industries, Inc.	455 N. Quince St.	Escondido, CA 92025
24618	Transcon Mfg. Co.	2655 Perth St.	Dallas, TX 75220
24931	Specialty Connector Co., Inc.	3560 Madison Ave.	Indianapolis, IN 46227
42838	National Rivet and Mfg. Co.	1-21 East Jefferson St.	Waupun, WI 53963
45722	USM Corp., Parker-Kalon Fastener Div.	1 Peekay Drive	Clifton, NJ 07014
70276	Allen Mfg. Co.	P. O. Drawer 570	Hartford, CT 06101
71279	Cambridge Thermionic Corp.	445 Concord Ave.	Cambridge, MA 02138
73743	Fischer Special Mfg. Co.	446 Morgan St.	Cincinnati, OH 45206
74445	Holo-Krome Co.	31 Brook St. West	Hartford, CT 06110
74868	Bunker Ramo Corp., The Amphenol RF Div.	33 E. Franklin St.	Danbury, CT 06810
77250	Pheoll Manufacturing Co., Division of Allied Products Corp.	5700 W. Roosevelt Rd.	Chicago, IL 60650
78189	Illinois Tool Works, Inc. Shakeproof Division	St. Charles Road	Elgin, IL 60120
79807	Wrought Washer Mfg. Co.	2100 S. O Bay St.	Milwaukee, WI 53207
80009	Tektronix, Inc.	P. O. Box 500	Beaverton, OR 97077
81073	Grayhill, Inc.	561 Hillgrove Ave.	La Grange, IL 60525
83385	Central Screw Co.	2530 Crescent Dr.	Broadview, IL 60153
83501	Gavitt Wire and Cable, Division of RSC Industries, Inc.	Central St.	Brookfield, MA 01506
86445	Penn Fibre and Specialty Co., Inc.	2032 E. Westmoreland St.	Philadelphia, PA 19134
87308	N. L. Industries, Inc., Southern Screw Div.	P. O. Box 1360	Statesville, NC 28677
97464	Industrial Retaining Ring Co.	57 Cordier St.	Irvington, NJ 07111
98291	Sealectro Corp.	225 Hoyt	Mamaroneck, NY 10544

FIGURE 1 EXPLODED

Fig. & Index No.	Tektronix Part No.	Serial/Model No. Eff	Dscont	Qty	1 2 3 4 5 Name & Description	Mfr Code	Mfr Part Number
1-1	337-1064-04			2	SHIELD,ELEC:SIDE	80009	337-1064-00
-2	366-1391-00			1	KNOB:GRAY W/SETSCREW	80009	366-1391-00
-3	366-1077-00			1	KNOB:GRAY W/SETSCREW	80009	366-1077-00
	----- -----			-	. KNOB INCLUDES:		
	213-0153-00			1	. SETSCREW:5-40 X 0.125 INCH,HEX SOC STL	74445	OBD
-4	366-1146-01			2	KNOB:GRAY WITH SETSCREW	80009	366-1146-01
	----- -----			-	. EACH KNOB INCLUDES:		
	213-0153-00			1	. SETSCREW:5-40 X 0.125 INCH,HEX SOC STL	74445	OBD
-5	366-1408-00			2	KNOB:GRAY WITH SETSCREW	80009	366-1408-00
	----- -----			-	. EACH KNOB INCLUDES:		
	213-0153-00			2	. SETSCREW:5-40 X 0.125 INCH,HEX SOC STL	74445	OBD
-6	366-1257-97			2	PUSH BUTTON:GRAY--SLOPE +	80009	366-1257-97
-7	366-1257-99			2	PUSH BUTTON:GRAY--COUPL AC	80009	366-1257-99
-8	366-1257-98			1	PUSH BUTTON:GRAY--SOURCE INPUT B	80009	366-1257-98
-9	426-0681-00			5	FR,PUSH BUTTON:GRAY PLASTIC	80009	426-0681-00
-10	----- -----			1	RESISTOR,VAR:(SEE R256,S256 EPL)		
					(ATTACHING PARTS)		
-11	210-0583-00			1	NUT,PLAIN,HEX.:0.25-32 X 0.312 INCH,BRS	73743	2X20319-402
-12	210-0940-00			1	WASHER,FLAT:0.25 ID X 0.375 INCH OD,STL	79807	OBD
-13	210-0046-00			1	WASHER,LOCK:INTL,0.26 ID X 0.40" OD,STL	78189	1214-05-00-0541C
					- - - * - - -		
-14	366-1058-41			1	KNOB:LATCH,7D15	80009	366-1051-41
					(ATTACHING PARTS)		
-15	214-1095-00			1	PIN,SPG,SPLIT:0.094 OD X 0.187 INCH LONG	13257	52-022-094-0187
					- - - * - - -		
-16	333-1583-00			1	PANEL,FRONT:7D15	80009	333-1583-00
-17	348-0235-00			2	SHLD GSKT,ELEC:4.734 INCH LONG	80009	348-0235-00
-18	105-0076-00			1	REL BAR,LATCH:PLUG-IN UNIT	80009	105-0076-00
-19	214-1280-00			1	SPRING,HLCPS:0.14 OD X 1.126"L,0.16"DIA W	80009	214-1280-00
-20	214-1054-00			1	SPRING,DETENT:LATCH	80009	214-1054-00
-21	105-0075-00			1	PAWL:0.475 X 0.21 X 0.184 INCH,PLSTC	80009	105-0075-00
-22	358-0029-05			2	BSHG,MACH THD:0.274 ID X 0.438"L,NP BRS	80009	358-0029-05
					(ATTACHING PARTS FOR EACH)		
-23	210-0590-00			1	NUT,PLAIN,HEX.:0.375 X 0.438 INCH,STL	73743	2X28269-402
-24	210-0012-00			1	WASHER,LOCK:INTL,0.375 ID X 0.50" OD STL	78189	1220-02-00-0541C
					- - - * - - -		
-25	131-0955-00			2	CONNECTOR,RCPT,:BNC,FEMALE	24931	28JR200-1
-26	131-1315-00			1	CONNECTOR,RCPT,:BNC,FEMALE	80009	131-1315-00
					(ATTACHING PARTS)		
-27	210-0255-00			1	TERMINAL,LUG:0.391" ID INT TOOTH	80009	210-0255-00
					- - - * - - -		
-28	260-1206-00			1	SWITCH,TOGGLE:SPDT,5A,115VAC CENTER OFF	09353	7103SYZ
					(ATTACHING PARTS)		
-29	210-0583-00			1	NUT,PLAIN,HEX.:0.25-32 X 0.312 INCH,BRS	73743	2X20319-402
	210-0223-00			1	TERMINAL,LUG:0.25 INCH DIA,SE	78189	2101-14-03-2520N
	210-0940-00	XB124000		1	WASHER,FLAT:0.25 ID X 0.375 INCH OD,STL	79807	OBD
-30	358-0464-00			1	BUSHING,SLEEVE:0.257 IDX0.312 ODX0.205"L	80009	358-0464-00
					- - - * - - -		
-31	260-0735-00			1	SWITCH,PUSH:SPST	81073	39-1
	210-0008-00	XB124000		1	WASHER,LOCK:INTL,0.172 ID X 0.331 OD,STL	78189	1208-00-00-0541C
-32	358-0378-00			1	BUSHING,SLEEVE:PRESS MOUNT	80009	358-0378-00
-33	131-0156-00			2	CONNECTOR,RCPT,:COAXIAL	74868	27-3
-34	131-0372-00			3	CONNECTOR,RCPT,:COAXIAL	98291	51-043-4300
-35	352-0324-00			1	HOLDER,DIODE:	80009	352-0324-00
-36	386-1447-65			1	SUBPANEL,FRONT:	80009	386-1447-65
					(ATTACHING PARTS)		
-37	213-0192-00			4	SCR,TPG,THD FOR:6-32 X 0.50 INCH,PNH STL	87308	OBD
					- - - * - - -		
	----- -----			-	. SUBPANEL INCLUDES:		
-38	136-0387-00			2	. JACK,TIP:GRAY	71279	4352-1-0318
-39	----- -----			1	CKT BOARD ASSY:--GATE(SEE A1 EPL)		
					(ATTACHING PARTS)		
-40	211-0156-00			2	SCREW,MACHINE:1-72 X 0.25",82 DEG,FLH STL	77250	OBD
					- - - * - - -		
-41	----- -----			1	CKT BOARD ASSY:--MODE(SEE A2 EPL)		
					(ATTACHING PARTS)		
	211-0156-00			2	SCREW,MACHINE:1-72 X 0.25",82 DEG,FLH STL	77250	OBD
					- - - * - - -		

FIGURE 1 EXPLODED (CONT)

Fig. & Index No.	Tektronix Part No.	Serial/Model No. Eff	Dscont	Qty	1 2 3 4 5 Name & Description	Mfr Code	Mfr Part Number
1	----- -----			-	. CKT BOARD ASSY INCLUDES:		
-42	131-0608-00			2	. CONTACT,ELEC:0.365 INCH LONG	22526	47357
-43	----- -----			1	CKT BOARD ASSY:--AVERAGE(SEE A3 EPL)		
					(ATTACHING PARTS)		
	211-0156-00			2	SCREW,MACHINE:1-72 X 0.25",82 DEG,FLH STL	77250	OBD
					- - - * - - -		
	----- -----			-	. CKT BOARD ASSY INCLUDES:		
-44	131-0589-00			2	. CONTACT,ELEC:0.46 INCH LONG	22526	47350
-45	----- -----			1	CKT BOARD ASSY:--CLOCK(SEE A4 EPL)		
					(ATTACHING PARTS)		
	211-0156-00			2	SCREW,MACHINE:1-72 X 0.25",82 DEG,FLH STL	77250	OBD
					- - - * - - -		
	----- -----			-	. CKT BOARD ASSY INCLUDES:		
-46	131-0589-00			2	. CONTACT,ELEC:0.46 INCH LONG	22526	47350
-47	337-1433-00			1	. SHIELD,LIGHT:FOR LIGHTED PUSH SWITCH	80009	337-1433-00
-48	343-0089-00			1	CLAMP,LOOP:LARGE	80009	343-0089-00
-49	006-0531-00			1	STRAP,TIE DOWN:	24618	700-3688
-50	----- -----			1	CKT BOARD ASSY:--POWER SUPPLY(SEE A8 EPL)		
	----- -----			-	. CKT BOARD ASSY INCLUDES:		
-51	136-0252-04			9	. CONTACT,ELEC:0.188 INCH LONG	22526	75060
-52	136-0263-03			3	. CONTACT,ELEC:FOR 0.025 INCH SQUARE PIN	00779	86250-2
-53	136-0328-02			3	. CONTACT,ELEC:HORIZONTAL	00779	86282-2
-54	214-0579-00			1	. TERM.,TEST PT:0.40 INCH LONG	80009	214-0579-00
-55	344-0154-00			2	. CLIP,ELECTRICAL:FOR 0.25 INCH DIA FUSE	80009	344-0154-00
-56	211-0155-00			2	. SCREW,EXT,RLV B:4-40 X 0.375 INCH,SST	80009	211-0155-00
-57	361-0301-00			2	. SPACER,SLEEVE:4-40 X 0.105 INCH LONG	80009	361-0301-00
-58	----- -----			1	CKT BOARD ASSY:--TIME BASE/LOGIC(SEE A7 EPL)		
	----- -----			-	. CKT BOARD ASSY INCLUDES:		
-59	----- -----			1	. OSCILLATOR:(SEE Y622 EPL)		
					(ATTACHING PARTS)		
-60	211-0097-00			2	. SCREW,MACHINE:4-40 X 0.312 INCH,PNH STL	83385	OBD
-61	210-1133-00			2	. WASHER,NONMETAL:0.142 ID X 0.25"OD FIBER	86445	OBD
					- - - * - - -		
-62	129-0317-00			2	. POST,ELEC-MECH:4-40 X 0.187 X 0.125 INCH L	80009	129-0317-00
-63	131-0608-00			13	. CONTACT,ELEC:0.365 INCH LONG	22526	47357
-64	136-0252-04			344	. CONTACT,ELEC:0.188 INCH LONG	22526	75060
-65	136-0263-03			31	. CONTACT,ELEC:FOR 0.025 INCH SQUARE PIN	00779	86250-2
-66	136-0254-01			4	. SOCKET,PIN CONN:0.145 INCH LONG	00779	1-331892-8
-67	214-0579-00			2	. TERM.,TEST PT:0.40 INCH LONG	80009	214-0579-00
-68	260-0723-00			1	. SWITCH,SLIDE:DPDT,0.5A,125VAC	80009	260-0723-00
-69	337-0607-00			1	. PL,ELEC SHIELD:0.625 X 1.28" CD PL BRS	80009	337-0607-00
-70	211-0155-00			5	. SCREW,EXT,RLV B:4-40 X 0.375 INCH,SST	80009	211-0155-00
-71	361-0238-00			5	. SPACER,SLEEVE:0.25 OD X 0.34 INCH LONG	80009	361-0238-00
-72	----- -----			1	CKT BOARD ASSY:--ATTENUATOR(SEE A5 EPL)		
					(ATTACHING PARTS)		
-73	211-0116-00			3	SCR,ASSEM WSHR:4-40 X 0.312 INCH,PNH BRS	83385	OBD
-74	407-1048-00			1	BRACKET,ANGLE:	80009	407-1048-00
					- - - * - - -		
	----- -----			-	. CKT BOARD ASSY INCLUDES:		
-75	131-1030-00			12	. CONTACT ASSY,EL:CAM SWITCH,BOTTOM	80009	131-1030-00
-76	131-1031-00			12	. CONTACT ASSY,EL:CAM SWITCH,TOP	80009	131-1031-00
-77	210-0779-00			12	. RIVET,TUBULAR:0.051 OD X 0.115 INCH LONG	42838	RA-29952715
-78	136-0252-00			24	. CONTACT,ELEC:0.145 INCH LONG	00779	2-330808-7
	136-0252-04			6	. CONTACT,ELEC:0.188 INCH LONG	22526	75060
-79	260-1227-01			2	. SWITCH,PUSH:DP,2-BUTTON	80009	260-1227-01
-80	260-1132-00			1	. SWITCH,PUSH:1 BUTTON,DOUBLE POLE	80009	260-1132-00
-81	220-0455-00			1	. NUT,BLOCK:0.281"SQ,THREE 4-40 THRU THDS	80009	220-0455-00
					(ATTACHING PARTS)		
-82	211-0116-00			1	. SCR,ASSEM WSHR:4-40 X 0.312 INCH,PNH BRS	83385	OBD
					- - - * - - -		
-83	200-1390-00			2	. COVER,CAM SW:ATTENUATOR	80009	200-1390-00
					(ATTACHING PARTS)		
-84	211-0008-00			4	. SCREW,MACHINE:4-40 X 0.25 INCH,PNH STL	83385	OBD
-85	210-0004-00			4	. WASHER,LOCK:INTL,0.12 ID X 0.26"OD,STL	78189	1204-00-00-0541C
					- - - * - - -		

FIGURE 1 EXPLODED (CONT)

Fig. & Index No.	Tektronix Part No.	Serial/Model No. Eff	Dscont	Qty	1 2 3 4 5 Name & Description	Mfr Code	Mfr Part Number
1-86	----- -----			2	. RESISTOR,VAR:		
					(ATTACHING PARTS FOR EACH)		
-87	211-0022-00			2	. SCREW,MACHINE:2-56 X 0.188 INCH,PNH STL	83385	OBD
-88	210-0001-00			2	. WASHER,LOCK:INTL,0.092 ID X 0.18"OD,STL	78189	1202-00-00-0541C
-89	210-0583-00			1	. NUT,PLAIN,HEX.:0.25-32 X 0.312 INCH,BRS	73743	2X20319-402
-90	210-0046-00			1	. WASHER,LOCK:INTL,0.26 ID X 0.40" OD,STL	78189	1214-05-00-0541C
-91	386-1792-00			1	. PLATE,VAR RES M:1.136 X 0.875 INCH OA	80009	386-1792-00
					- - - * - - -		
-92	376-0141-00			2	. CPLG,SHAFT,RDG:FOR 0.08 TO 0.125"DIA SHAFT	80009	376-0141-00
	----- -----			-	. . COUPLING INCLUDES:		
	213-0075-00			1	. . SETSCREW:4-40 X 0.094 INCH,HEX SOC STL	70276	OBD
-93	384-0247-00			2	. EXTENSION SHAFT:4.375 INCH LONG	80009	384-0247-00
-94	354-0391-00			2	. RING,RETAINING:0.395"FREE ID X 0.025" STL	97464	3100-43-CD
-95	214-1139-00			-	. SPRING,FLAT:GOLD COLORED	80009	214-1139-00
	214-1139-02			-	. SPRING,FLAT:GREEN COLORED	80009	214-1139-02
	214-1139-03			-	. SPRING,FLAT:RED COLORED	80009	214-1139-03
-96	214-1127-00			4	. ROLLER,DETENT:0.125 DIA X 0.125 INCH L	80009	214-1127-00
-97	401-0081-01			2	. BEARING,CAM SW:WITH THREADED INSERTS	80009	401-0081-01
-98	105-0352-00			2	. ACTUATOR,CAM SW:	80009	105-0352-00
-99	401-0146-00			2	. BEARING,CAM SW:REAR	80009	401-0146-00
-100	211-0116-00			8	. SCR,ASSEM WSHR:4-40 X 0.312 INCH,PNH BRS	83385	OBD
-101	210-0406-00			16	. NUT,PLAIN,HEX.:4-40 X 0.188 INCH,BRS	73743	2X12161-402
-102	337-1647-00			1	SHLD,ELECTRICAL:INPUT CHANNELS	80009	337-1647-00
					(ATTACHING PARTS)		
-103	213-0254-00			1	SCR,TPG,THD CTG:2-56X0.25"100 DEG,FLH STL	45722	OBD
					- - - * - - -		
-104	376-0051-00			1	CPLG,SHAFT,FLEX:FOR 0.125 INCH DIA SHAFTS	80009	376-0051-00
	----- -----			-	. COUPLING INCLUDES:		
	213-0022-00			4	. SETSCREW:4-40 X 0.188 INCH,HEX SOC STL	74445	OBD
	354-0251-00			2	. RING,COUPLING:0.251 ID X 0.375 INCH OD,AL	80009	354-0251-00
	376-0049-00			1	. CPLG,SHAFT,FLEX:PLASTIC	80009	376-0049-00
-105	384-1140-00			1	EXTENSION SHAFT:0.125 DIA X 2.34 INCH LONG	80009	384-1140-00
-106	----- -----			1	CKT BOARD ASSY:--INTERFACE(SEE A6 EPL)		
					(ATTACHING PARTS)		
-107	211-0105-00			5	SCREW,MACHINE:4-40 X 0.188"100 DEG,FLH STL	83385	OBD
-108	220-0547-01			5	NUT,BLOCK:0.38 X 0.25 X 0.282"OA	80009	220-0547-01
-109	211-0116-00			5	SCR,ASSEM WSHR:4-40 X 0.312 INCH,PNH BRS	83385	OBD
					- - - * - - -		
	----- -----			-	. CKT BOARD ASSY INCLUDES:		
-110	131-0590-00			31	. CONTACT,ELEC:0.71 INCH LONG	22526	47351
	131-0589-00			4	. CONTACT,ELEC:0.46 INCH LONG	22526	47350
	131-0608-00			33	. CONTACT,ELEC:0.365 INCH LONG	22526	47357
	131-0592-00			3	. CONTACT,ELEC:0.885 INCH LONG	22526	47353
-111	131-1003-00			2	. CONNECTOR BODY,:CKT BD MT,3 PRONG	80009	131-1003-00
-112	136-0252-04			606	. CONTACT,ELEC:0.188 INCH LONG	22526	75060
-113	214-0579-00			9	. TERM.,TEST PT:0.40 INCH LONG	80009	214-0579-00
-114	----- -----			1	. RESISTOR,VAR:(SEE R328 EPL)		
					(ATTACHING PARTS)		
-115	210-0583-00			1	. NUT,PLAIN,HEX.:0.25-32 X 0.312 INCH,BRS	73743	2X20319-402
-116	210-0046-00			1	. WASHER,LOCK:INTL,0.26 ID X 0.40" OD,STL	78189	1214-05-00-0541C
-117	386-2273-00			1	. PLATE,VAR RES M:CIRCUIT BOARD MOUNTING	80009	386-2273-00
					- - - * - - -		
-118	352-0238-00			2	. HOLDER,COAXIAL:GROUNDING,FOR 0.125"DIA COA	80009	352-0238-00
-119	351-0188-00			5	. GUIDE-POST,LOCK:0.65 INCH LONG	80009	351-0188-00
-120	351-0185-00			2	. GUIDE-POST,LOCK:0.65 INCH LONG	80009	351-0185-00
-121	386-1402-00			1	PANEL,REAR:	80009	386-1402-00
					(ATTACHING PARTS)		
-122	213-0192-00			4	SCR,TPG,THD FOR:6-32 X 0.50 INCH,PNH STL	87308	OBD
-123	361-0326-00			1	SPACER,SLEEVE:0.18 ID X 0.25 OD X 0.10"L	80009	361-0326-00
					- - - * - - -		
-124	214-1140-00			5	SPRING,HLCPS:0.251 OD X 0.375"L,SST WIRE	80009	214-1140-00
-125	214-1061-00			1	SPRING,GROUND:FLAT	80009	214-1061-00
-126	426-0499-01			1	FR SECT,PLUG-IN:BOTTOM	80009	426-0499-01
-127	426-0505-04			1	FR SECT,PLUG-IN:TOP	80009	426-0505-04
-128	131-0707-00			55	CONTACT,ELEC:0.48"L,22-26 AWG WIRE	22526	47439
-129	210-0774-00			4	EYELET,METALLIC:0.152 OD X 0.245 INCH L,BRS	80009	210-0774-00

FIGURE 1 EXPLODED (CONT)

Fig. & Index No.	Tektronix Part No.	Serial/Model No. Eff	Dscont	Qty	1 2 3 4 5	Name & Description	Mfr Code	Mfr Part Number
1-130	210-0775-00			4		EYELET,METALLIC:0.126 OD X 0.23 INCH L,BRS	80009	210-0775-00
-131	175-0825-00			FT		WIRE,ELECTRICAL:2 WIRE RIBBON	23499	TEK-175-0825-00
-132	175-0826-00			FT		WIRE,ELECTRICAL:3 WIRE RIBBON	08261	TEK-175-0826-00
-133	175-0827-00			FT		WIRE,ELECTRICAL:4 WIRE RIBBON	08261	TEK-175-0827-00
-134	175-0828-00			FT		WIRE,ELECTRICAL:5 WIRE RIBBON	23499	TEK-175-0828-00
-135	175-0829-00			FT		WIRE,ELECTRICAL:6 WIRE RIBBON	83501	TEK-175-0829-00
-136	352-0171-00			1		HOLDER,TERM.CON:1 WIRE BLACK	80009	352-0171-00
-137	352-0169-00			4		HOLDER,TERM.CON:2 WIRE BLACK	80009	352-0169-00
-138	352-0161-00			3		HOLDER,TERM.CON:3 WIRE BLACK	80009	352-0161-00
-139	352-0162-00			4		HOLDER,TERM.CON:4 WIRE BLACK	80009	352-0162-00
-140	352-0163-00			1		HOLDER,TERM.CON:5 WIRE BLACK	80009	352-0163-00
-141	352-0164-00			3		HOLDER,TERM.CON:6 WIRE BLACK	80009	352-0164-00

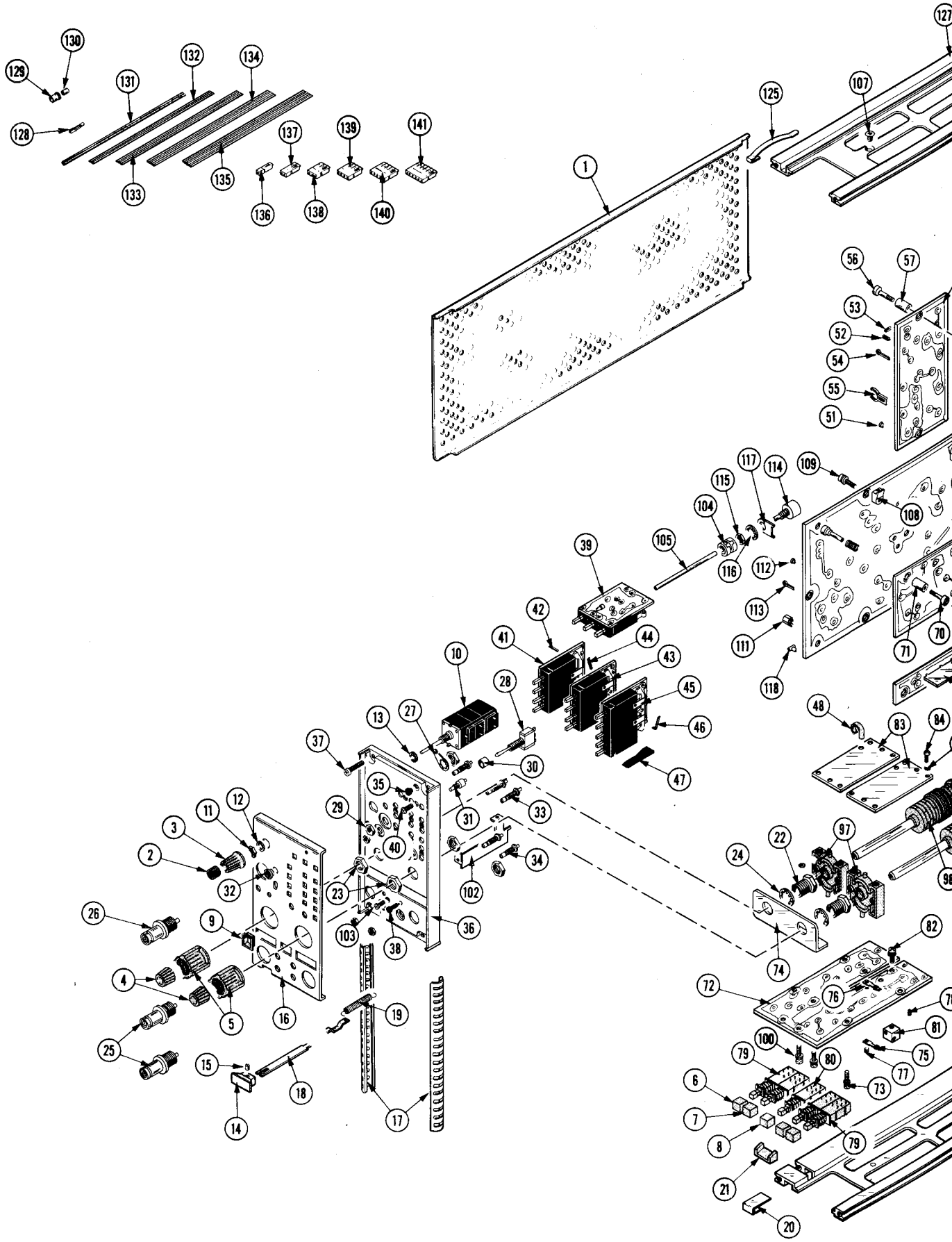
1
2
3
4
5
6
7
8
9
10
11
12
13
14
15
16
17
18
19
20
21
22
23
24
25
26
27
28
29
30
31
32
33
34
35
36
37
38
39
40
41
42
43
44
45
46
47
48
51
52
53
54
55
56
57
70
71
72
73
74
75
76
77
78
79
80
81
82
83
84
97
98
100
102
103
104
105
107
108
109
111
112
113
114
115
116
117
118
125
127
128
129
130
131
132
133
134
135
136
137
138
139
140
141
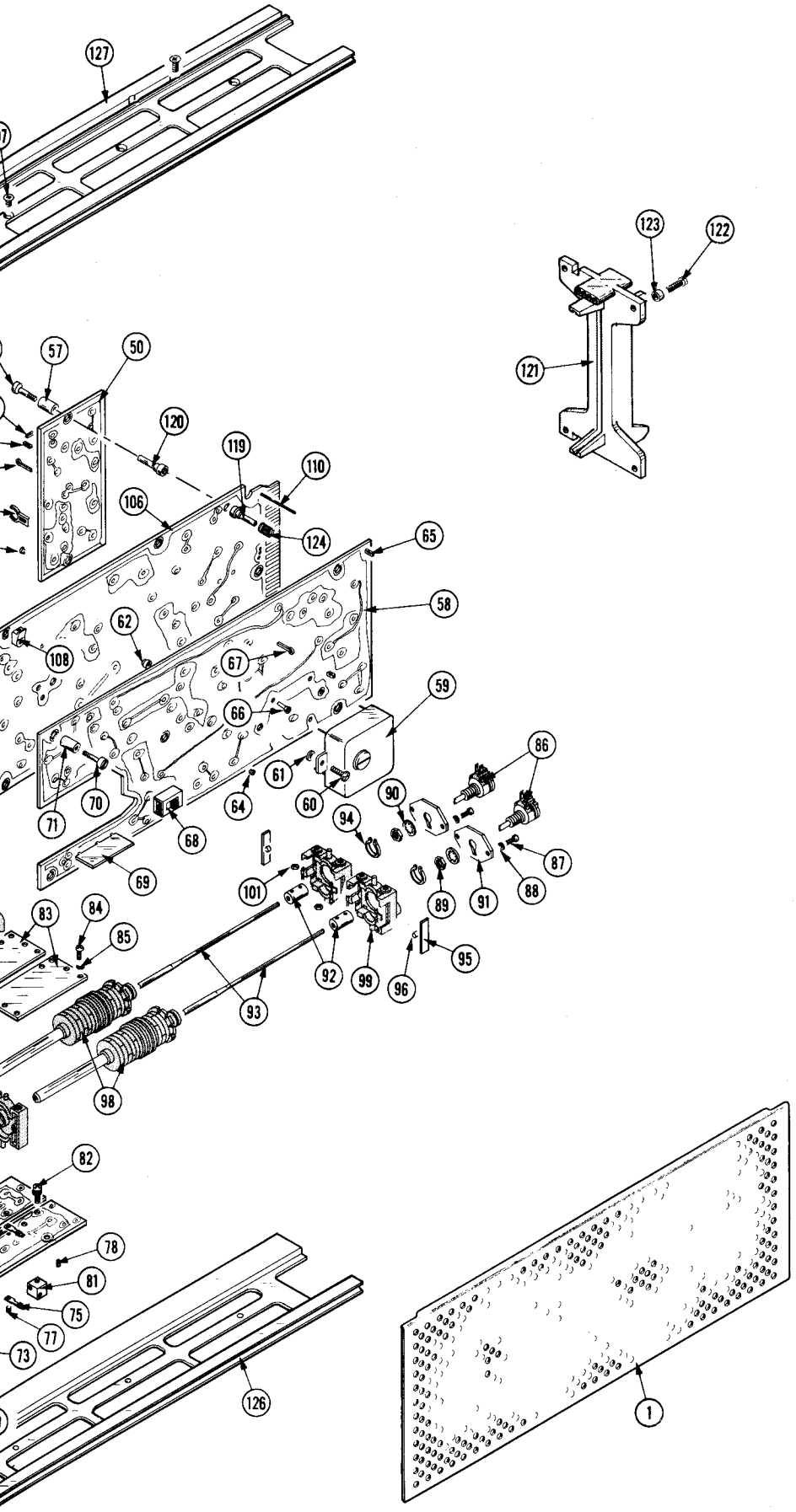
FIG. 1 EXPLODED