TK-30

CALIBRATION FIXTURES

You'll find a complete list of the test equipment for calibrating your Tektronix instrument in the instruction manual received with that instrument. Some of the items listed are Calibration Fixtures—items which we have designed and made available for the sole purpose of assisting you to service your Tektronix instruments accurately and efficiently. Calibration fixtures are not described in your Tektronix catalog because they do not offer the wide range measurement capability of Tektronix instruments. This booklet describes calibration fixtures. Tektronix instrument manuals list those which we recommend for servicing each instrument. For prices or other information on the use of the fixtures, contact your Tektronix Field Office, Field Representative or Distributor.

July, 1968

TPD 7/68

TEKTRONIX CALIBRATION FIXTURES

The items listed below are in numerical order by part number, and the pages following are in the same order. The list is like a table of contents, but includes items that are obsolescent to show what they are replaced by. When a calibration procedure calls for a particular item, the word "for" will precede the list of corresponding instruments. The word "with" will be used to indicate the type of instruments the cal fixture is useful with when not identified in the calibration procedure.

NUMBER	DESCRIPTION	USEFUL WITH OR CAL PROCEDURE CALLS FOR
003-0007-00	Alignment Tool Kit	General
* 003-0035-00	Dual Input Coupler	(Use 067-0525-00 and BNC Adapters)
* 003-0036-00	Dual Input Coupler	(Use 067-0525-00 and BNC Adapters)
* 003-0037-00	Dual Input Coupler	(Use 067-0525-00 and BNC Adapters)
003-0500-00	Alignment Tool Kit	General
* 011-0022-00	Input Normalizer	(Use 067-0533-00)
* 011-0029-00	Input Normalizer	(Use 067-0534-00)
* 011-0030-00	Input Normalizer	(Use 067-0535-00)
* 011-0051-00	Input Normalizer	(Use 067-0536-00 and UHF Adapters)
* 011-0053-00	Input Normalizer	(Use 067-0541-00 and UHF Adapters)
* 011-0065-00	Input Normalizer	(Use 067-0536-00)
* 011-0066-00	Input Normalizer	(Use 067-0538-00)
* 011-0067-00	Input Normalizer	(Use 067-0539-00)
* 011-0068-00	Input Normalizer	(Use 067-0541-00)
* 011-0073-00	Input Normalizer	(Use 067-0537-00)
012-0038-00	Plug-in Extension Cable	For Q, R, Z, 1L20, 1S1, 1S2 -- With any other letter-series or 1-series plug-in
012-0064-00	Plug-in Extension Cable	For 4S1, 4S2, 4S2A, 4S3 -- With 5T1, 5T1A, 5T3
012-0066-00	Plug-in Extension Cable	For 3A5, 3A74, 3S3, 3S76, 3T4, 3T77, 3T77A, 9A1, 9A2 -- With any other 2-series or 3-series plug-in
012-0067-00	Circuit Card Extender	For 6R1, 6R1A
012-0068-00	Circuit Card Extender	For 6R1, 6R1A
012-0069-00	Circuit Card Extender	For 4S1, 4S2, 4S2A, 4S3
012-0070-00	Coax Extender Cable	For 4S1, 4S2, 4S2A, 4S3
012-0077-00	Circuit Card Extender	For 3S3
012-0078-00	Circuit Card Extender	For 263, 3B5 -- With 262, 3A5
* 012-0079-00	Circuit Card Extender	With 1A1 (Use 012-0100-00, included in Kit 050-0271-00)
012-0080-00	Plug-in Extension Cable	For 10A1 -- With any other 10-series or 11-series plug-ins
012-0100-00	Circuit Card Extender	With 1A1
* 013-0002-00	Plug-in Extender	(Use 013-0019-00)
013-0005-00	Gain Set Extender	For 133, 945, 551 -- With any other 530, 540, 550-series main frame
013-0013-00	Plug-in Extender	For 555 Time Base Plug-ins
013-0015-00	Plug-in Extender	For R
* 013-0019-00	Plug-in Extender	(Use 013-0055-00)
013-0021-00	Timing Signal Generator	With 524D, 524AD
* 013-0023-00	Input Connector Adapter	(Use 016-0011-00)
013-0025-00	Test Resistor	For Q, 3C66
* 013-0026-00	Test Resistor	(Use 013-0078-00)
013-0028-00	Timing Signal Generator	For N, 3T77, 3T77A, 5T1, 5T1A
013-0034-00	Plug-in Extender	For 2A61, 3A3, 3A8, 3B1, 3B2, 3B3, 3B4, 3B5, 3C66, 3T4 -- With any other 2-series or 3-series plug-ins
* 013-0046-00	Signal Switch	With 180 (Not replaced)
013-0055-00	Plug-in Extender	For A, D, E, G, K, O, 545A, 555, 82, 86 -- With any other 1-series or letter-series plug-ins

*Discontinued or replaced.

TEKTRONIX CALIBRATION FIXTURES

NUMBER	DESCRIPTION	USEFUL WITH OR CAL PROCEDURE CALLS FOR
013-0075-00	Drive Pulse Inverter	For 10A1, 3A7, 422, 453, 567, 86 (Used on TU-5 Step Generator)
013-0077-00	Plug-in Extender	With 10-series and 11-series plug-ins
013-0078-00	Test Resistor	For Q, 3C66
015-0001-00	L-C Delta Standard	For 130
* 015-0013-00	Frequency Doubler	(Use 184 or 284)
015-0038-00	TU-5 Step Generator	For 1A1, 10A1, 3A7, 422, 453, 647, 82, 86
015-0042-00	Set of Test Resistors	With 175
015-0043-00	TU-5 Step Generator Pkg.	For 3A7, 82, 86
* 015-0056-00	Frequency Doubler	(Use 184 or 284)
015-0088-00	Step Generator	For P6045 Probe
016-0011-00	Input Connector Adapter	For R
* 017-0010-00	Cal Signal Adapter	(Use 017-0074-00 with BNC Adapter)
017-0019-00	Timing Signal Generator	For 519
017-0031-00	Cal Signal Adapter	With Clamp-on Current Probes
* 017-0041-00	Probe Adapter	For P80 Probe (Not replaced)
017-0074-00	Cal Signal Adapter	For N
* 067-0050-00	Line Voltage Control	(Use GR W20MT3A)
* 067-0075-00	50 Ω Pi Attenuator	(Use 067-0529-00, also see 067-0530-00 and 067-0531-00)
* 067-0081-00	Mixer-rectifier	(Use GR 874-VRL)
* 067-0114-00	Four-input adapter	(Use 067-0525-00 and BNC Adapters)
067-0500-00	CRT Capacitance Normalizer	For 561A, 564, 567 With 568
067-0501-00	Plug-in Extension Coax	With 4S1, 4S2, 4S2A, 4S3, 5T1, 5T1A, 5T3
067-0502-00	Standard Amplitude Calibrator	For 1A2, 1A6, 1A7, 1S2, 10A1, 3A1, 3A5, 3A7, 3A8, 422, 453, 502A, 529, 533A, 549, 556, 561A, 581A, 585A, 82, 86
067-0503-00	Precision Resistance Divider	For W, 10A1, 3A7
067-0505-00	Plug-in Extender	With 6R1, 6R1A
* 067-0506-00	Signal Generator	(Use Type 191)
067-0507-00	Grid Current Checker	For 3A8 -- With O Unit
067-0508-00	50 Ω Amplitude Calibrator	For 1S1, 1S2, 4S2, 4S2A -- With any scope or vertical channel having 50-Ω input
067-0510-00	Signal Pickoff	For 067-0544-00 -- With 10A1, 10A2
067-0511-00	Coax Signal Attenuator	For 1S1, 5T3 -- With any scope or plug-in having 50-Ω inputs
067-0513-00	Fast-step Generator	For 1S1, 1S2, 4S2, 4S2A -- With any sampling scope vertical channels
067-0514-00	10 V RMS Voltmeter	With 517, 517A, 555
067-0515-00	Precision 50-ohm Resistor	For 561A, 556 -- With scopes having calibrator signals from 50-ohm source
067-0517-00	Double Trigger Mod Kit	With any sampling scope (Modifies Type 111 Pulse Generator)
067-0518-00	Harmonic Modulator	For 1L10, 1L20, 3L10 -- With other Spectrum Analyzers
067-0521-00	Test Plug-in	For 533A, 549, 556, 81 -- With other 530, 540, and 550-series scopes
067-0523-00	Test Plug-in	For 581A, 585A -- With 581, 585
067-0525-00	Dual Input Coupler	For CA, 1A2, 1A6, 1A7, 3A1, 3A7, 453 -- With most other differential-input scopes and plug-ins
067-0528-00	Test Load	With 125
067-0529-00	Precision Resistance Divider	With E, 1A7, 122, 2A61 (Used on 067-0502-00)
067-0530-00	Connector Adapter Cable	With E, 122
067-0531-00	Connector Adapter Cable	With 2A61

*Discontinued or replaced.

TEKTRONIX CALIBRATION FIXTURES

NUMBER	DESCRIPTION	USEFUL WITH OR CAL PROCEDURE CALLS FOR
067-0532-00	Sine Wave Generator	For 10A2A, 647A, 454 -- With scopes having band-width from 65 MHz to 500 MHz
067-0533-00	Input Normalizer	For CA, L, 516
067-0534-00	Input Normalizer	For Z
067-0535-00	Input Normalizer	For A, B, D, G, H, M, O, 2A60, 2A63, 3A75, 502, 502A, 503,504
067-0536-00	Input Normalizer	For 82, 86
067-0537-00	Input Normalizer	For 1A1, 1A2, 82, 86
067-0538-00	Input Normalizer	For CA, L, W, 10A1, 3A7, 453, 516
067-0539-00	Input Normalizer	For 3A5, Z
067-0540-00	Input Normalizer	For 1A6
067-0541-00	Input Normalizer	For D, G, H, M, O, 1A7, 2A60, 2A63, 3A1, 3A2, 3A3, 3A6, 3A74, 3A75, 3A8, 502, 502A, 503, 504, 9A1, 9A2
067-0544-00	Test Plug-in	For 647A -- With 647
067-0549-00	Input Adapter	For 410
067-0552-00	Input Normalizer	With 422
067-0553-00	Signal Insertion Unit	For 454
067-0559-00	H.F. Current Adapter	For P6042 With P6019
067-0562-00	Dual Input Adapter	For P6046
067-0563-00	Shield	For P6046
067-0565-00	Signal Adder	For 520
067-0573-00	Calibration Graticule	For 611
* TU-1	Test Unit	General (Use 067-0521-00)
* TU-2	Test Unit	General (Use 067-0521-00)
* TU-3	Test Unit	General (Use 067-0523-00)
* TU-4	Test Unit	General (Use typical 2-series or 3-series plug-in units)
* TU-5	Test Unit	Same as 015-0038-00 and 015-0043-00
* TU-6	Test Unit	General (Use 067-0521-00)
* TU-7	Test Unit	General (Use 067-0521-00)
* TU-50	Test Unit	General (Use Types 106, 191, and 184)
* TU-76	Test Unit	General (Use General Radio W10MT3W)
* TU-77	Test Unit	General (Use General Radio W20MT3A)
* 1M1	Test Plug-in	General (Use 067-0521-00)
* 3M1	CRT Capacitance Normalizer	(Use 067-0500-00)
* 10/11M1	Test Plug-in	(Use 067-0544-00)
* 84	Test Plug-in	(Use 067-0523-00)

* Discontinued or replaced.

ALIGNMENT TOOLS

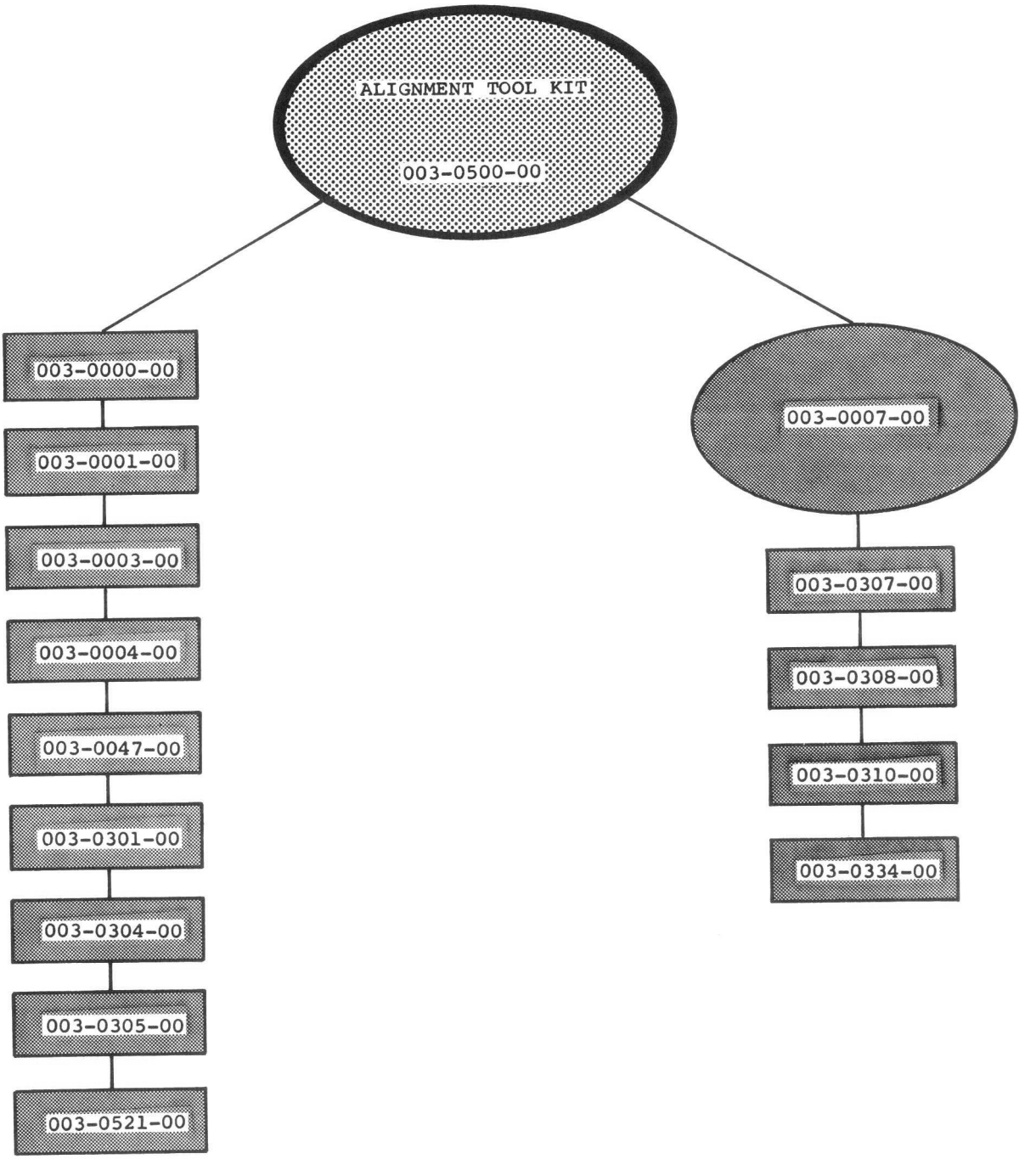

KEY

= ASSEMBLY

= SUB-ASSEMBLY

= SUB-PARTS

SEE FOLLOWING PAGES FOR PICTURES AND DESCRIPTIONS

ALIGNMENT TOOLS

TOOL: 1-1/2 inch shaft; 5 inches total length, plastic shaft and handle, metal screwdriver tip.

003-0000-00

TOOL: 7 inch shaft; 10-1/2 inches total length, plastic shaft and handle, metal screwdriver tip.

003-0001-00

TOOL: 6 inches long by 3/8 inch diameter, nylon, with screwdriver shaped ends.

003-0008-00

TOOL: 3 inch plastic shaft and handles, metal screwdriver tip, 6-1/2 inches total length.

003-0047-00

TOOL: 4-3/8 inches long by 1/4 inch diameter shaft with metal screwdriver tip and knob for handle, for tuning 517 vertical trimmers.

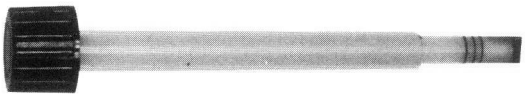

003-0374-00

TOOL: 4-1/4 inches long by 5/8 inch diameter, with screwdriver handle. For ERIE 557 ceramic capacitors

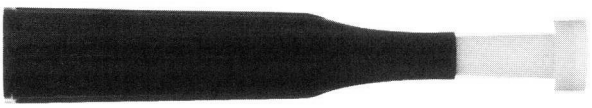

003-0521-00

ALIGNMENT TOOLS

HANDLE: Uses 003-0304-00 insert. 003-0305-00

HANDLE: Nylon, uses 003-0008-00, 003-0010-00 and 003-0334-00 inserts. 003-0307-00

INSERT: Low capacity nylon with wire pin, 7-3/4 inches long when inserted into handles for 551 right hand delay line. Requires 003-0305-00 handle. 003-0304-00

INSERT: For turret attenuators, requires 003-0307-00 handle. 003-0308-00

♦ INSERT: 0.077 inch outside diameter, use with 003-0307-00 handle, for 5/64 inch inside diameter hex cores. 003-0310-00

INSERT: Nylon, use with 003-0307-00 handle, for turret attenuator. 003-0334-00

ROD: 7 inches long, plastic rod with recessed metal screwdriver tips, one end for #4 studs and the other end for #6 studs. Walsco # 2519 or equal. 003-0003-00

ROD: 7-1/2 inches long, plastic rod with 1/4 inch hex socket at each end. Walsco #2503 or equal. 003-0004-00

ROD: 5 inches long. plastic, for 0.100 inch inside diameter powdered iron hex slugs. 003-0301-00

PLUG-IN EXTENSION CABLE
(Part No. 012-0038-00)

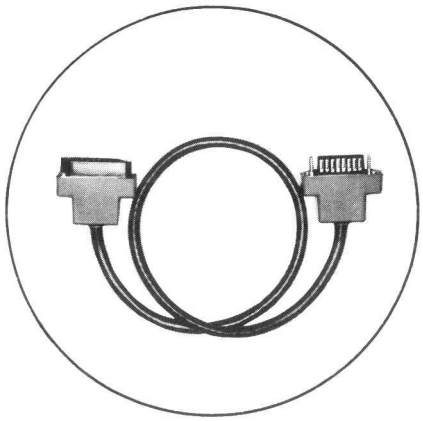

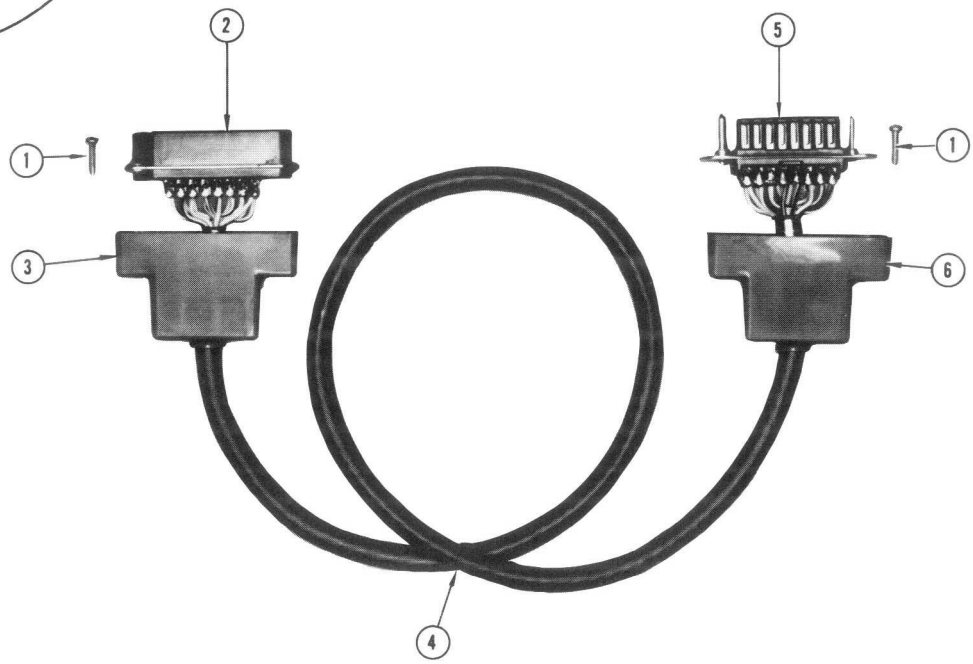

REF. NO.	PART NO.	SERIAL/MODEL NO. EFF.	SERIAL/MODEL NO. DISC.	QTY.	DESCRIPTION
1	213-0082-00			4	SCREW, thread cutting, 4-40 x 1/2 inch, PHS
2	131-0018-00			1	CONNECTOR, female, 16 contact
3	202-0066-00	-EARLY-		1	BOX, plug-in extension cable
	202-0066-02	-LATE-		1	BOX, plug-in extension cable
4	175-0236-00			ft	CABLE, vinyl cover
5	131-0017-00			1	CONNECTOR, male, 16 contact
6	202-0066-00	-EARLY-		1	BOX, plug-in extension cable
	202-0066-01	-LATE-		1	BOX, plug-in extension cable

DATA SHEET

NO. 061-0724-00

DATE APRIL 1968(R)

PLUG-IN TEST CABLE
(Part No. 012-0064-00)

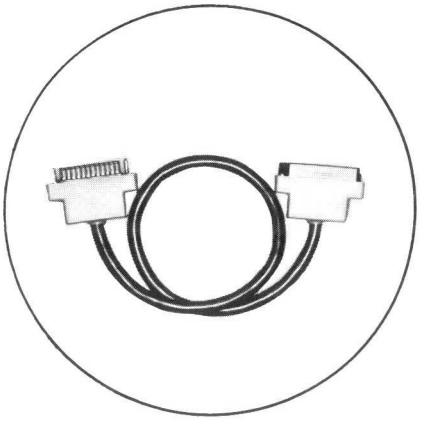

LATE MODEL

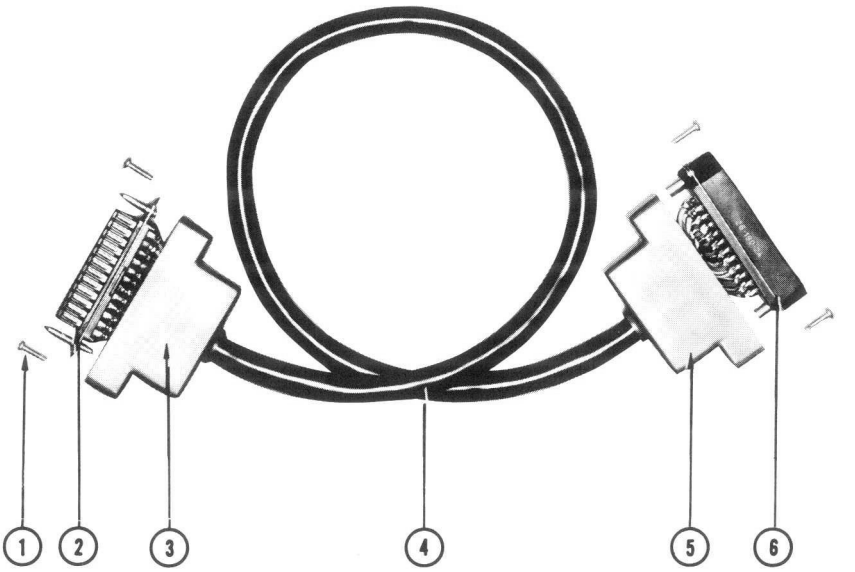

REF. NO.	PART NO.	SERIAL/MODEL NO. EFF.	SERIAL/MODEL NO. DISC.	QTY.	DESCRIPTION
1	213-0082-00			4	SCREW, thread cutting, 4-40 x 1/2" phillips PH
2	131-0149-00			1	CONNECTOR, chassis mt. 24 contact, male
3	200-0453-00			1	COVER, plug-in ext., male
4	175-0245-00			1	CABLE, for plug-in extension .520 dia. vinyl jacket w/(4) #18, (7) #22, (7) 50 coax.
5	200-0478-00			1	COVER, plug-in extension, 3.207 x 1-5/8, female
6	131-0148-00			1	CONNECTOR, chassis mt. 24 contact, female
	343-0091-00			2	CLAMP, strain relief, (not shown)

PLUG-IN EXTENSION CABLE
(Part No. 012-0066-00)

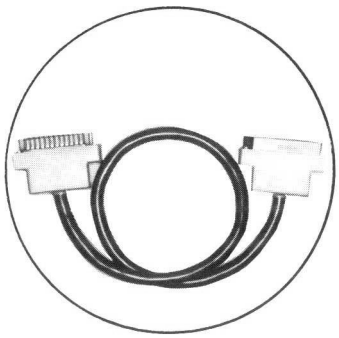

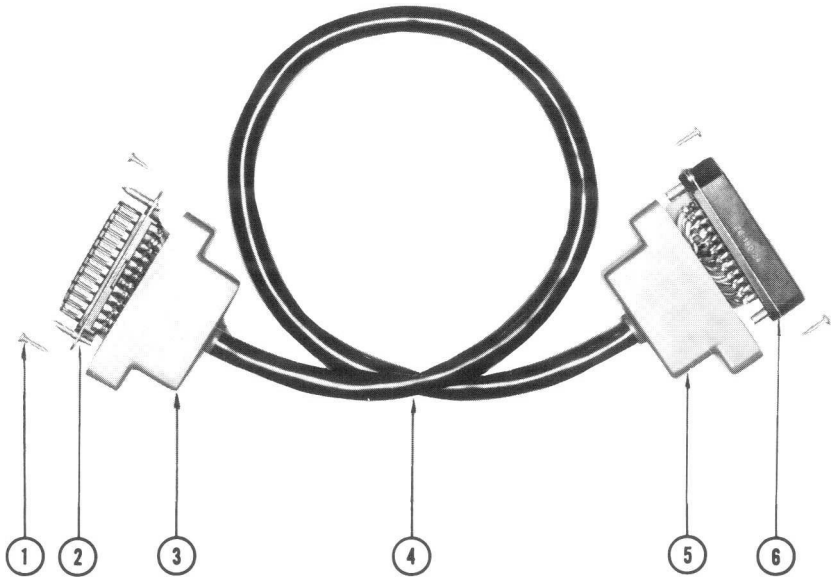

REF. NO.	PART NO.	SERIAL/MODEL NO. EFF.	SERIAL/MODEL NO. DISC.	QTY.	DESCRIPTION
1	213-0082-00			4	SCREW, thread cutting, 4-40 x 1/2 in. Phillips PH
2	131-0149-00			1	CONNECTOR, chassis mt. 24 contact, male
3	200-0454-00			1	COVER, plug-in extension
4	175-0246-00			FT	CABLE (32 in.)
5	200-0478-00			1	COVER, plug-in extension cable, 3.207 x 1-5/8 female
6	131-0148-00			1	CONNECTOR, chassis mt. 24 contact, female
	343-0091-00			2	CLAMP, strain relief (not shown)

PUBLICATION NO.

061-0748-00
August 1965
(Revised)

15 PIN PLUG-IN EXTENSION BOARD
(Part No. 012-0067-00)

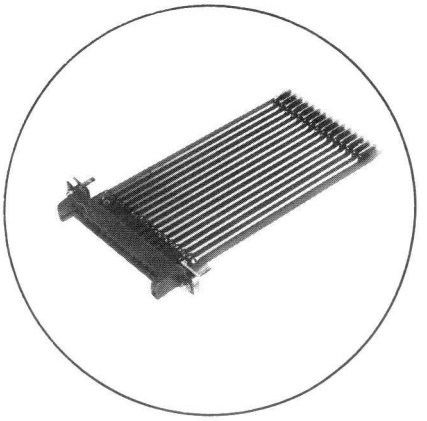

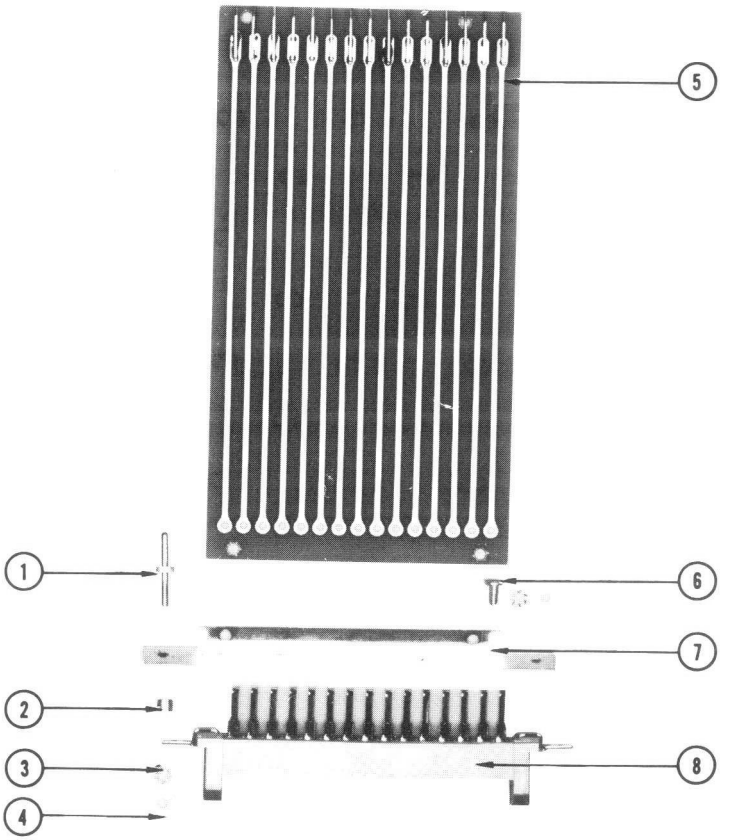

REF. NO.	PART NO.	SERIAL/MODEL NO. EFF.	SERIAL/MODEL NO. DISC.	QTY.	DESCRIPTION
1	214-0279-00			2	PIN, locating
2	166-0024-00			2	TUBE, spacer
3	210-0004-00			4	LOCKWASHER, internal #4
4	210-0406-00			4	NUT, hex, 4-40 x 3/16 inch
5	388-0524-00			1	BOARD, etched circuit
					Includes:
	131-0207-00			15	CONNECTOR, contact
6	211-0008-00			2	SCREW, 4-40 x 1/4 inch PHS phillips
7	406-0855-00			1	BRACKET, extension board
8	131-0248-00			1	CONNECTOR, 15 pin

PUBLICATION NO.

061-0749-00
August 1965
(Revised)

20 PIN PLUG-IN EXTENSION BOARD
(Part No. 012-0068-00)

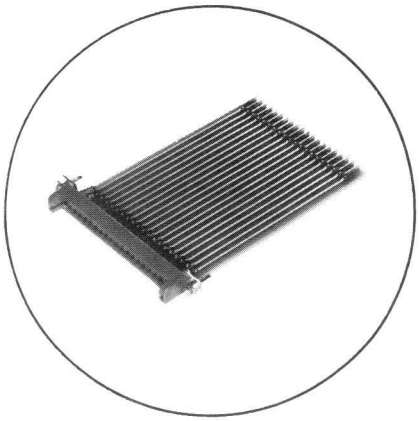

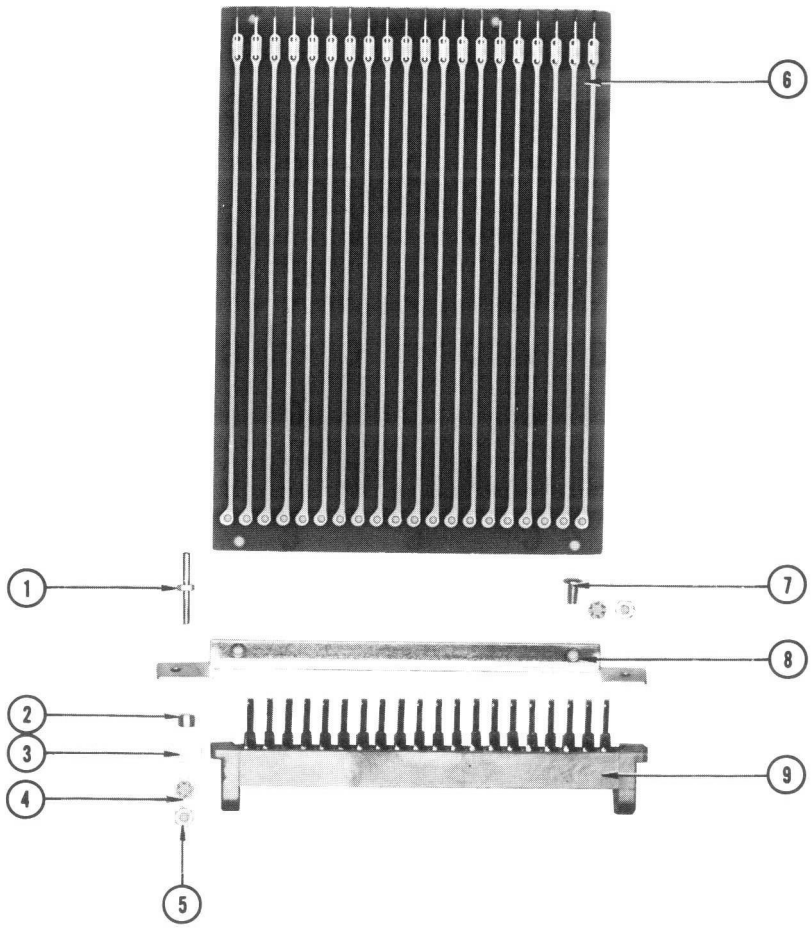

REF. NO.	PART NO.	SERIAL/MODEL NO. EFF.	SERIAL/MODEL NO. DISC.	QTY.	DESCRIPTION
1	214-0279-00			2	PIN, locating
2	166-0024-00			2	TUBE, spacer
3	406-0859-00			2	BRACKET, hold down connector
4	210-0004-00			4	LOCKWASHER, internal #4
5	210-0406-00			4	NUT, hex, 4-40 x 3/16 inch
6	388-0525-00			1	BOARD, etched circuit
					Includes:
	131-0207-00			20	CONNECTOR, contact
7	211-0008-00			2	SCREW, 4-40 x 1/4 inch PHS phillips
8	406-0854-00			1	BRACKET, extension board
9	131-0247-00			1	CONNECTOR, 20 pin

PUBLICATION NO.

061-0750-00
August 1965
(Revised)

PLUG-IN EXTENSION
(Part No. 012-0069-00)

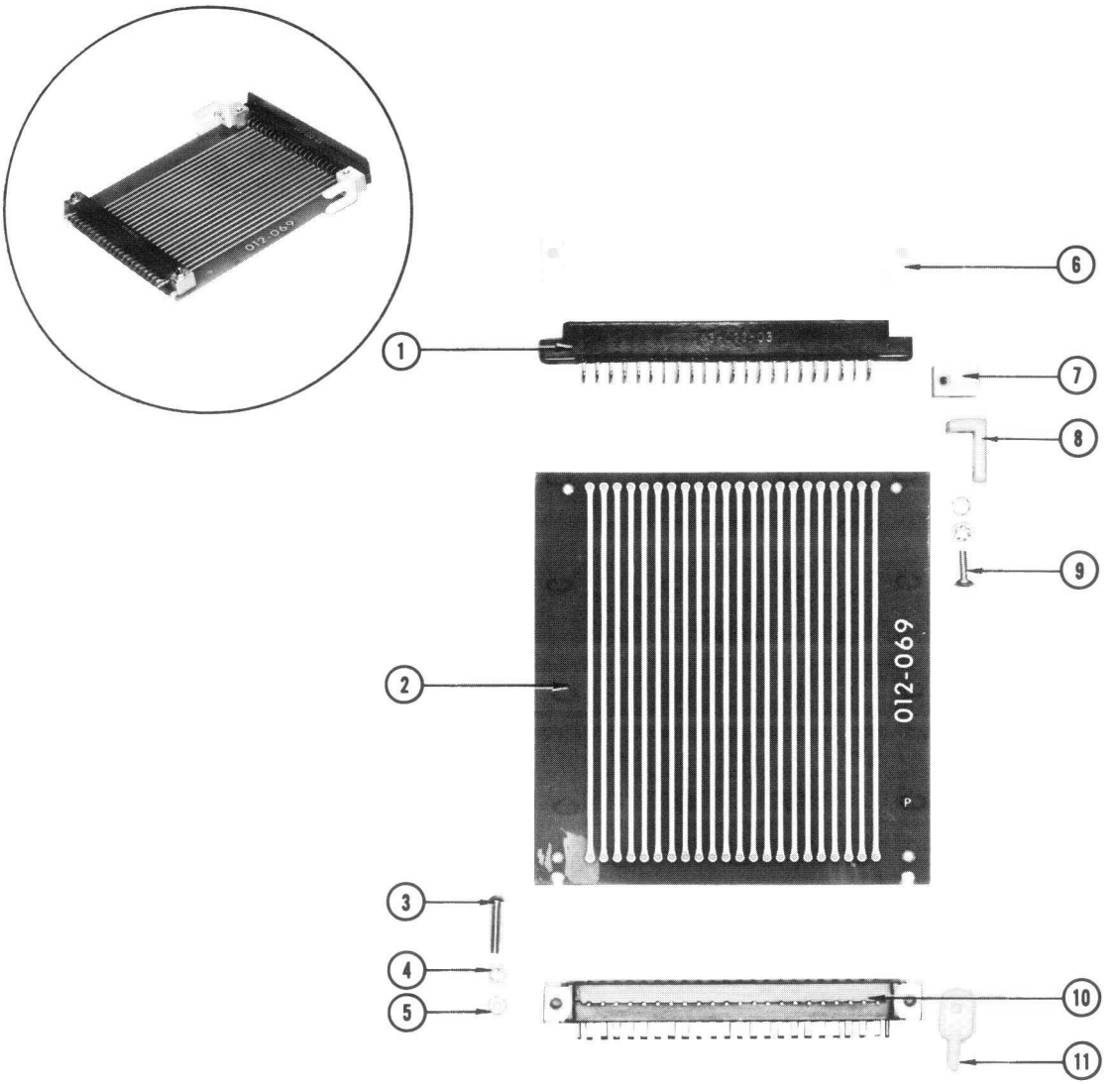

REF. NO.	PART NO.	SERIAL/MODEL NO. EFF.	SERIAL/MODEL NO. DISC.	QTY.	DESCRIPTION
1	131-0246-00			1	CONNECTOR, 22 pin
2	388-0526-00			1	BOARD, etched circuit
3	211-0016-00			4	SCREW, 4-40 x 5/8 inch PHS philips
4	210-0004-00			4	LOCKWASHER, internal #4
5	210-0406-00			2	NUT, hex, 4-40 x 3/16 inch
6	387-0715-00			1	PLATE, connector
7	406-0858-00			2	BRACKET, connector mounting
8	352-0039-00			2	HOLDER, plug in chassis
9	211-0012-00			4	SCREW, 4-40 x 3/8 inch PHS phillips
10	131-0218-00			1	CONNECTOR, 22 contact
11	384-0593-00			2	ROD, pin index, nylon

PUBLICATION NO.

061-0751-00
August 1965
(Revised)

PLUG-IN EXTENSION
(Part No. 012-0070-00)

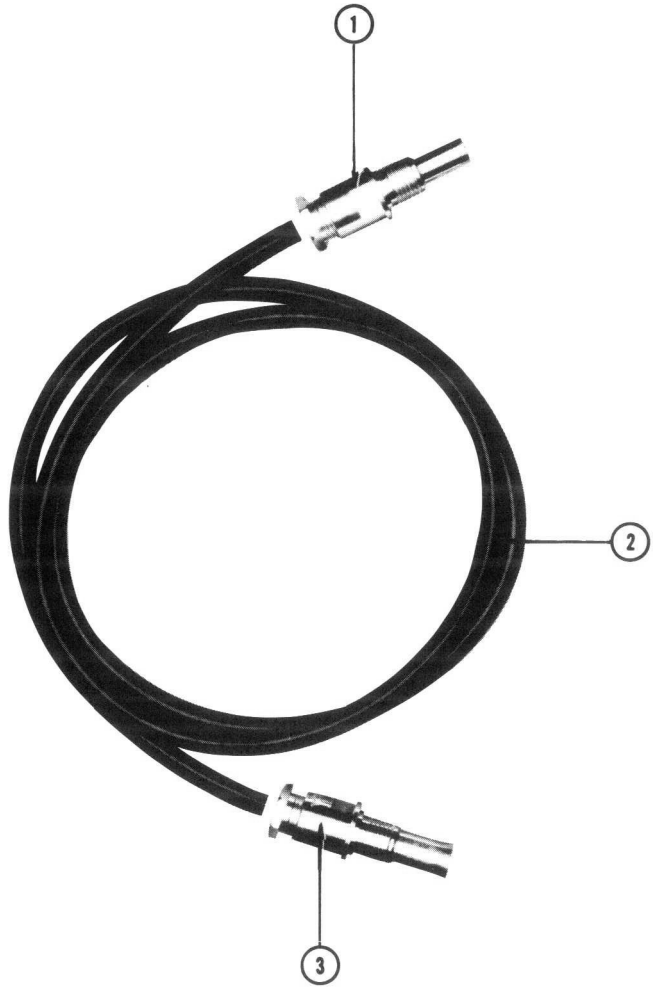

REF. NO.	PART NO.	SERIAL/MODEL NO. EFF.	SERIAL/MODEL NO. DISC.	QTY.	DESCRIPTION
1	131-0222-00			1	CONNECTOR, push on, bulkhead plug
2	175-0300-00			FT	CABLE (32") coax., 50 ohm
3	131-0221-00			1	CONNECTOR, push on, bulkhead Jack

PUBLICATION NO.

061-0752-00
August 1965
(Revised)

ETCHED CKT. BOARD EXTENSION (3S3)
(Part No. 012-0077-00)

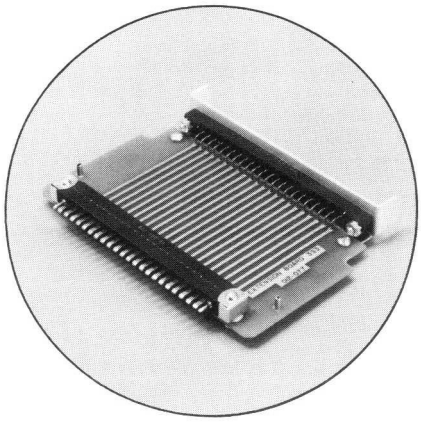

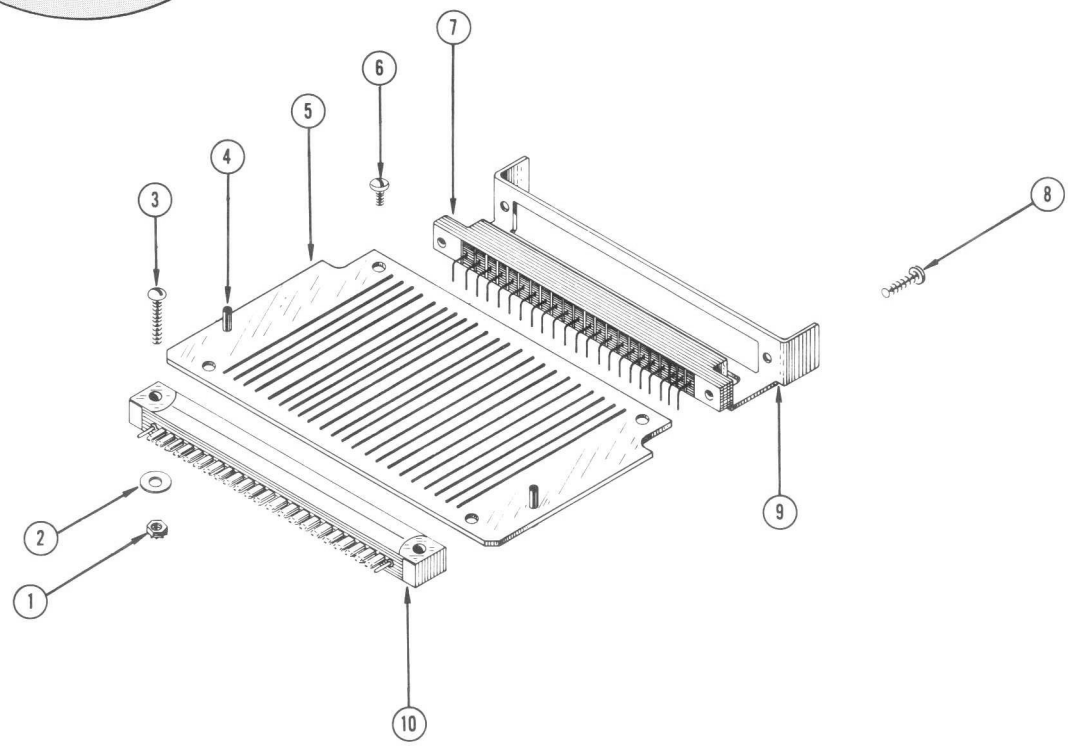

REF. NO.	PART NO.	SERIAL/MODEL NO. EFF.	SERIAL/MODEL NO. DISC.	QTY.	DESCRIPTION
1	210-0586-00			6	NUT, keps, 4-40 x 1/4 inch
2	210-0851-00			2	WASHER, .119 ID x 3/8 inch OD
3	211-0016-00			2	SCREW, 4-40 x 5/8 inch, RHS phillips
4	214-0180-00			2	PIN, roll, 3/32 x 1/2 inch
5	388-0570-00			1	BOARD, etched circuit
6	211-0008-00			2	SCREW, 4-40 x 1/4 inch, PHS phillips
7	131-0246-00			1	CONNECTOR, 22 pin
8	211-0014-00			2	SCREW, 4-40 x 1/2 inch, PHS phillips
9	406-0952-00			1	BRACKET, plug-in extension
10	131-0218-00			1	CONNECTOR, 22 contact

PUBLICATION NO.

062-0054-00
August 1965
(Revised)

ETCHED CIRCUIT CARD ASSEMBLY
(Part No. 012-0078-00)

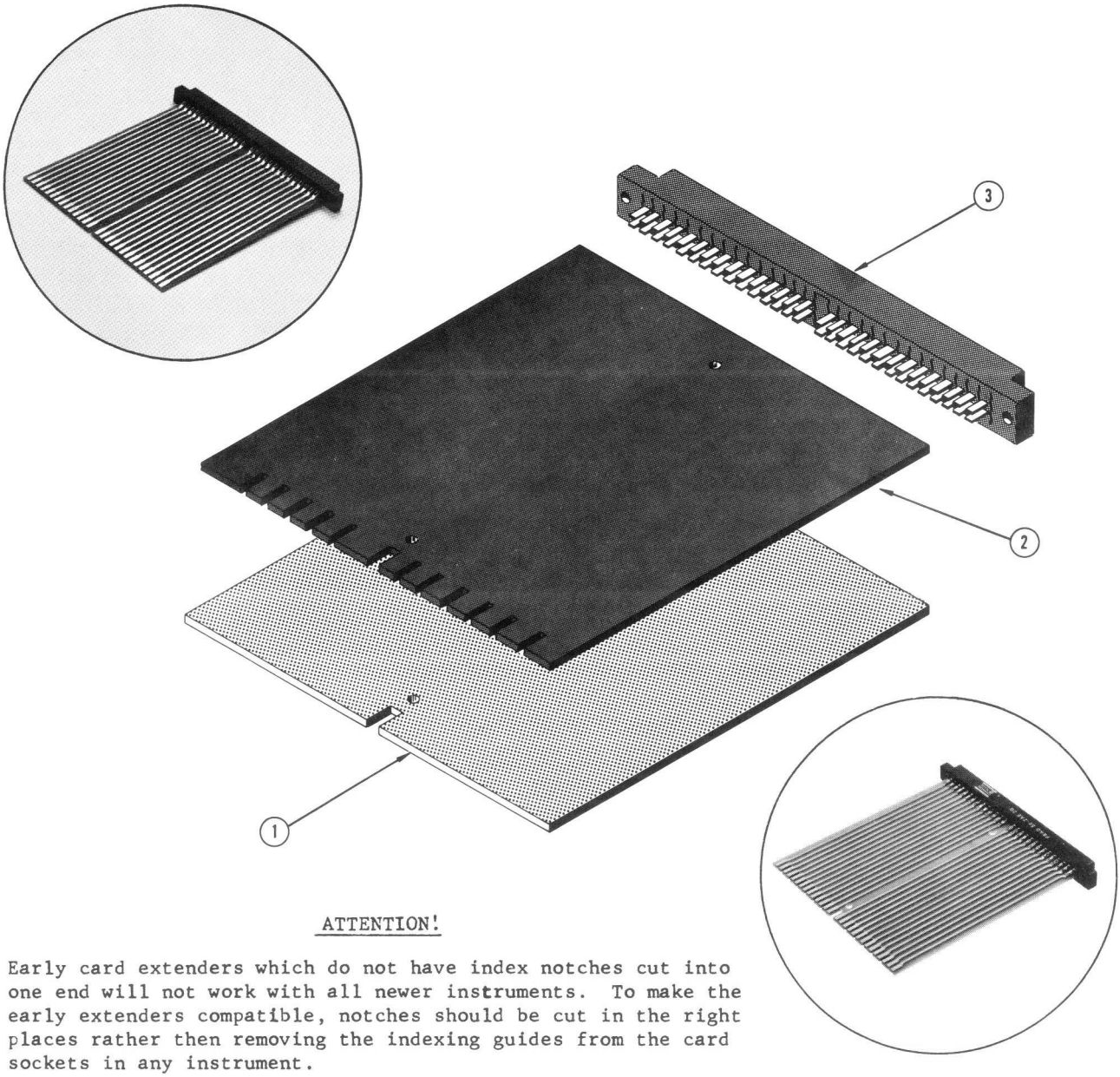

ATTENTION!

Early card extenders which do not have index notches cut into one end will not work with all newer instruments. To make the early extenders compatible, notches should be cut in the right places rather then removing the indexing guides from the card sockets in any instrument.

REF. NO.	PART NO.	SERIAL/MODEL NO. EFF.	SERIAL/MODEL NO. DISC.	QTY.	DESCRIPTION
1	388-0568-00	—EARLY—		1	BOARD, etched circuit, extension
2	388-0568-00	—LATE—		1	BOARD, etched circuit, extension
3	131-0292-00			1	CONNECTOR, 28 pin contact

DATA SHEET NO.
062-0042-00
November 1966
(Revised)

PLUG-IN TEST CABLE
(Part No. 012-0080-00)

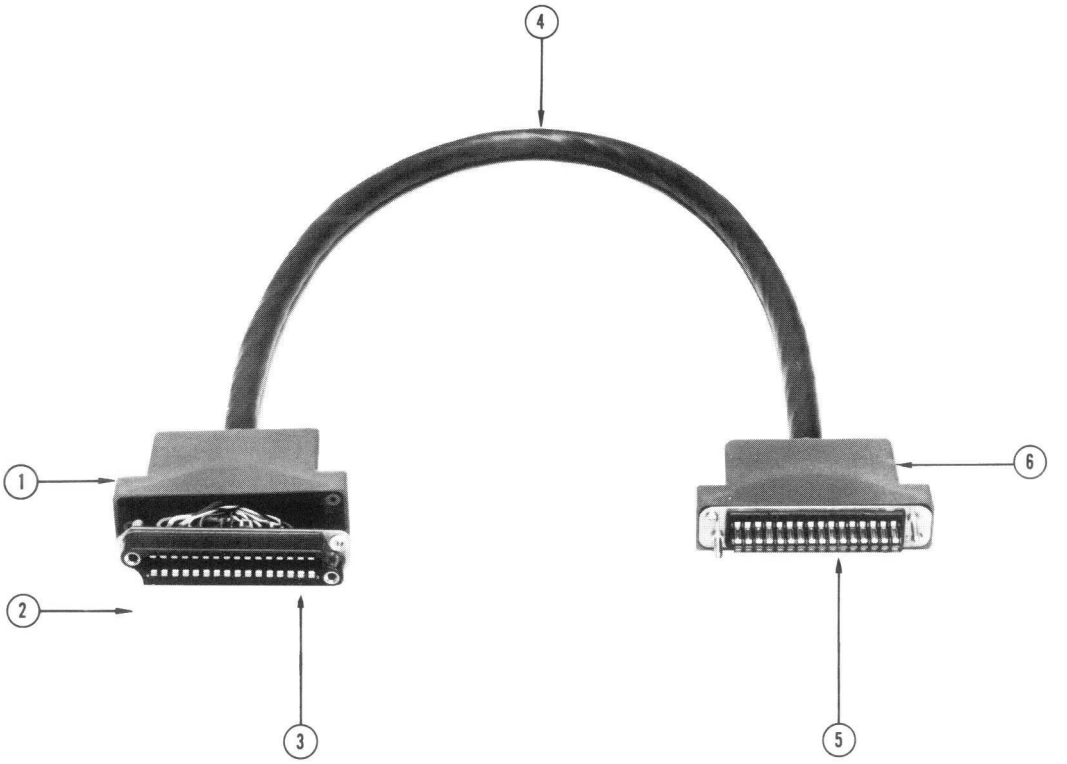

REF. NO.	PART NO.	SERIAL/MODEL NO. EFF.	SERIAL/MODEL NO. DISC.	QTY.	DESCRIPTION
1	200-0551-00			1	COVER, plug-in extension, female
2	213-0082-00			4	SCREW, thread cutting, 4-40 x 1/2 inch, phillips
3	131-0097-00			1	CONNECTOR, chassis mount, 32 contact, female
4	175-0287-00			FT	CABLE, assembly, coax., 32 inches
5	131-0096-00			1	CONNECTOR, chassis mount, 32 contact, male
6	200-0549-00			1	COVER, plug-in extension
	343-0109-00			2	CLAMP, cable (not shown)

PUBLICATION NO.

062-0091-00
August 1965
(Revised)

ETCHED CKT BOARD EXTENSION
(Part No. 012-0100-00)

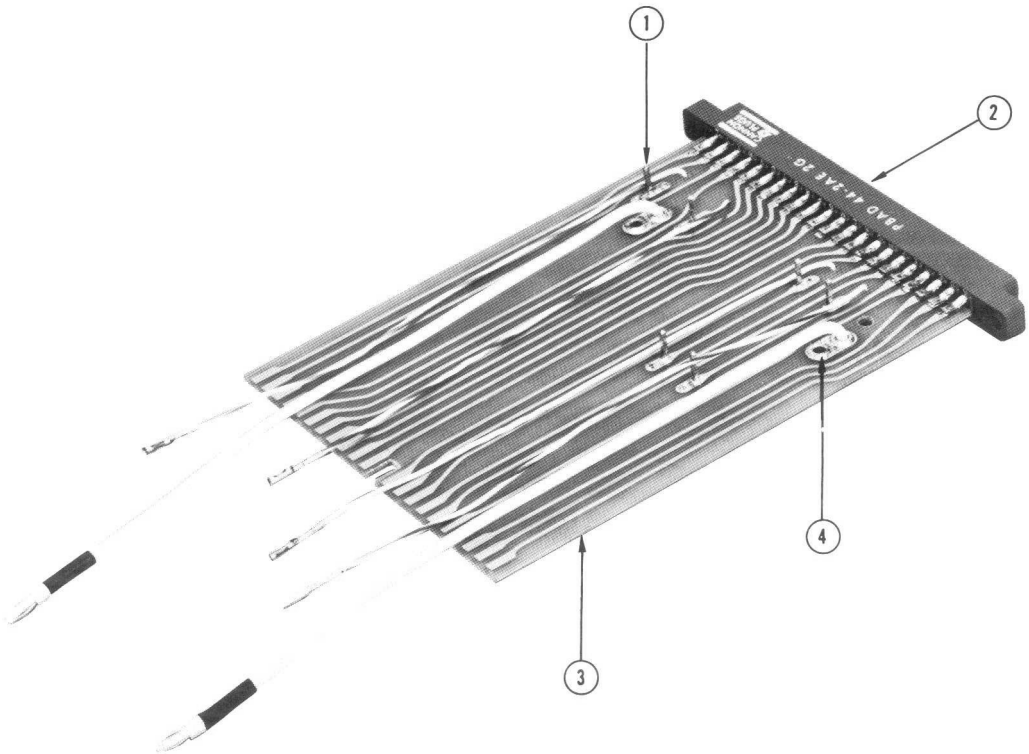

REF. NO.	PART NO.	SERIAL/MODEL NO. EFF.	SERIAL/MODEL NO. DISC.	QTY.	DESCRIPTION
1	214-0572-00			10	KEY, connector
2	136-0156-00			1	SOCKET, 44 pin
3	388-0575-00			1	BOARD, etched circuit
4	210-0696-00			4	EYELET

DATA SHEET
NO. 062-0544-00
DATE APRIL 1968(R)

FOR REPLACEMENT PARTS NOT LISTED CONTACT YOUR TEKTRONIX FIELD OFFICE.

GAIN ADJUST ADAPTER
(Part No. 013-0005-00)

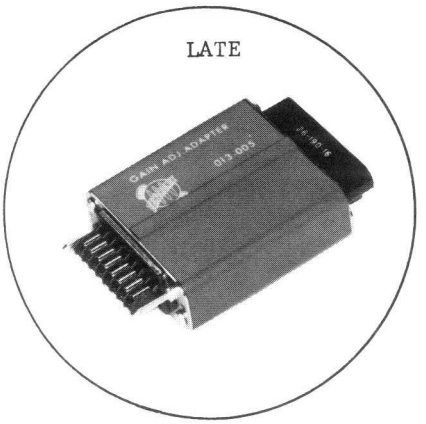

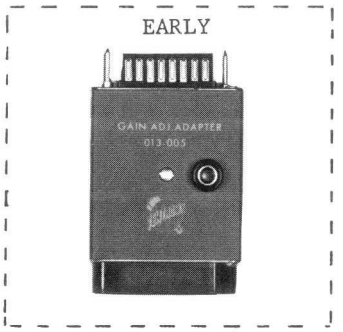

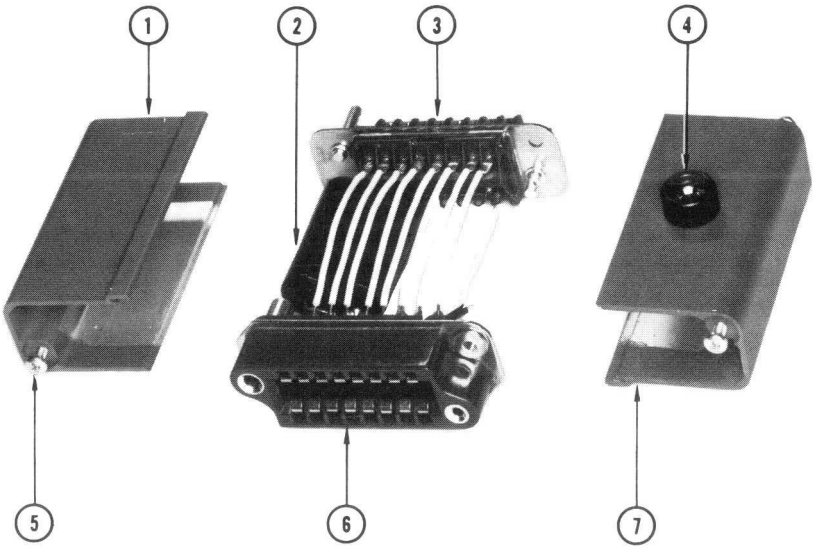

REF. NO.	PART NO.	SERIAL/MODEL NO. EFF.	SERIAL/MODEL NO. DISC.	QTY.	DESCRIPTION
1	200-0430-00			1	COVER, plug-in extension
2	285-0526-00			2	CAPACITOR, mt. .1 µfd, 400 v 20%
	302-0224-00			1	RESISTOR, comp. 1/2 w, 220 k 10%
3	131-0017-00			1	CONNECTOR, chassis mt. plug-ins, 16 conta 16 contact, male
4	136-0052-00			1	SOCKET, banana jack, black
	210-0223-00			1	LUG, solder
	210-0904-00			1	WASHER, fiber
5	213-0119-00			4	SCREW, thread forming, 4-24 x 3/8, Pan HS
6	131-0018-00			1	CONNECTOR, chassis mt. scope, 16 contact, female
7	200-0428-00			1	COVER, plug-in extension

PUBLICATION NO.

061-0800-00
August 1965
(Revised)

TIME BASE EXTENSION
(Part No. 013-0013-00)

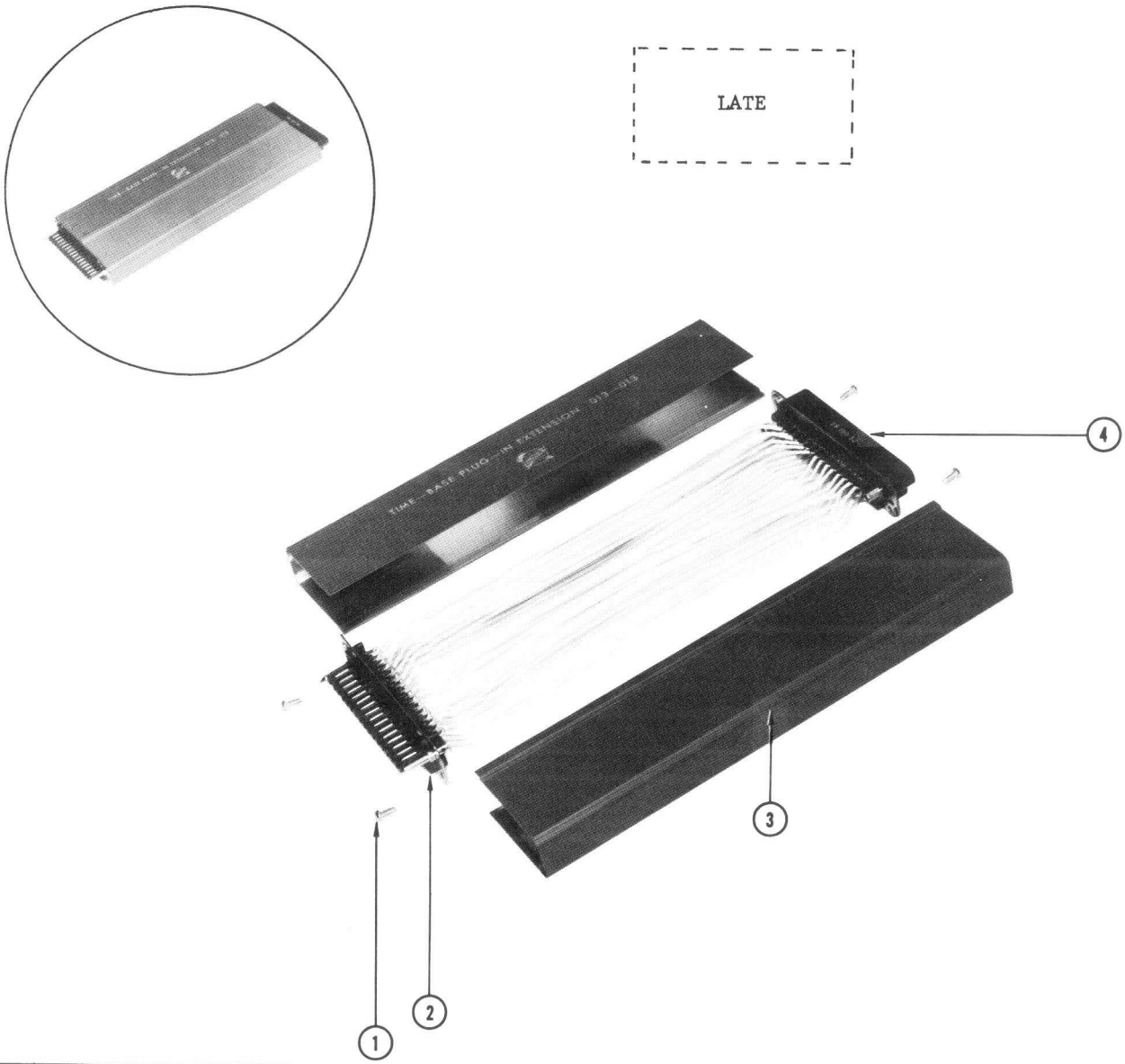

REF. NO.	PART NO.	SERIAL/MODEL NO. EFF.	SERIAL/MODEL NO. DISC.	QTY.	DESCRIPTION
1	213-0119-00			4	SCREW, thread forming, 4-24 x 3/8 Pan HS
2	131-0096-00			1	CONNECTOR, chassis mt., 32 contact, male
3	200-0433-00			2	COVER, plug-in extension
4	131-0097-00			1	CONNECTOR, chassis mt., 32 contact, female

PLUG-IN EXTENSION
(Part No. 013-0015-00)

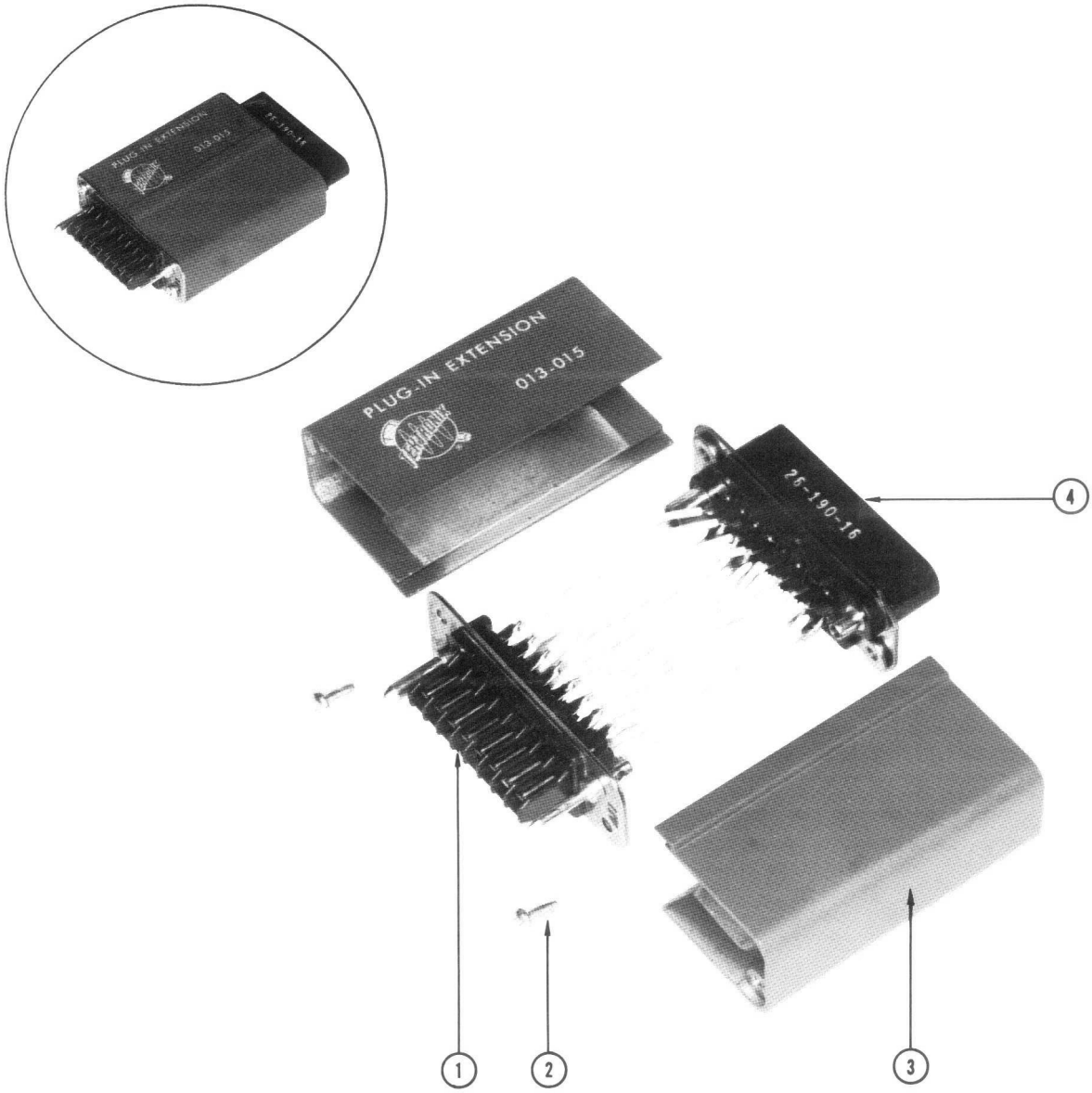

REF. NO.	PART NO.	SERIAL/MODEL NO. EFF.	SERIAL/MODEL NO. DISC.	QTY.	DESCRIPTION
1	131-0017-00			1	CONNECTOR, chassis mt., 16 contact, male
2	213-0119-00			4	SCREW, thread forming, 4-24 x 3/8, pan HS
3	200-0431-00			2	COVER
4	131-0018-00			1	CONNECTOR, chassis mt., 16 contact, female

PUBLICATION NO.

061-0809-00
August 1965
(Revised)

013-0021-00 CALIBRATION FIXTURE

Time Mark Calibrator

REF. NO.	PART NO.	SERIAL/MODEL NO. EFF.	SERIAL/MODEL NO. DISC.	QTY.	DESCRIPTION
	013-0021-00				The 013-0021-00 Time Mark Calibrator is used to calibrate the internal time mark calibrator on the 524 D and 524 AD Oscilloscopes. It provides 5 MHz sine-waves to check the 0.05, 0.1, and 1 µs positions. And 3.15 MHz sine-waves to check the 0.005 H and 0.025 H positions. Accuracy at room temperature (25° ±5°C), 0.05%.

DATA SHEET

NO. 062-0894-00

DATE NOV. 1967

120 OHM PLUG-IN RESISTOR BOARD
(Part No. 013-0025-00)

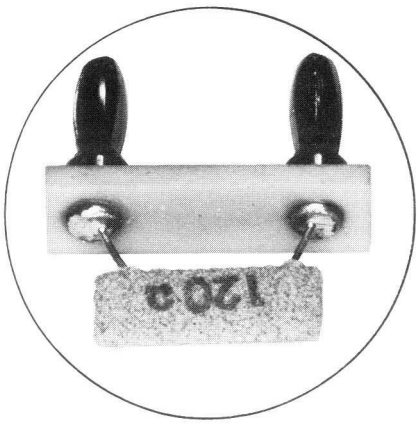

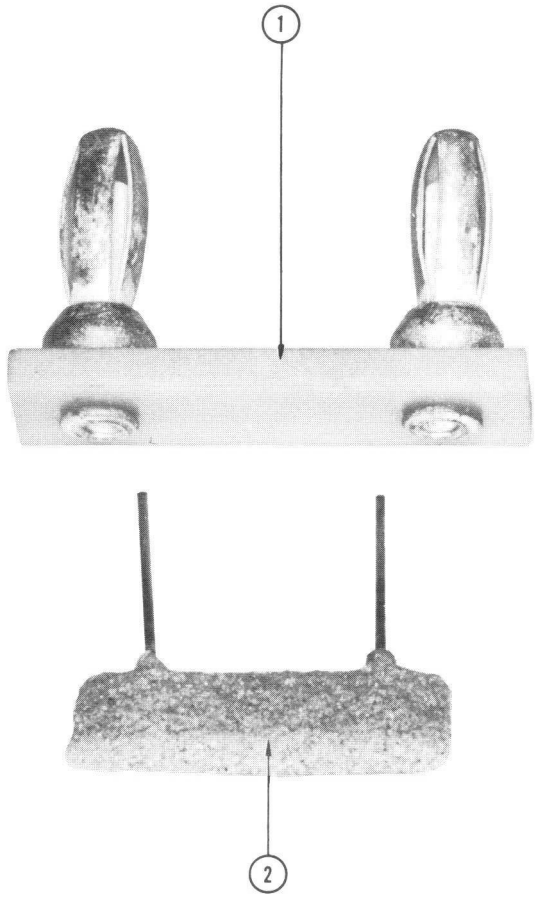

REF. NO.	PART NO.	SERIAL/MODEL NO. EFF.	SERIAL/MODEL NO. DISC.	QTY.	DESCRIPTION
1	392-0124-00			1	BOARD, resistor
2	310-0561-00			1	RESISTOR, 120 Ω. 1/2 W, Prec., ±1%
	- - - - - -			-	

DATA SHEET NO.
061-0770-00
DECEMBER 1965
(Revised)

TIMING STANDARD
(Part No. 013-0028-00)

The Timing Standard provides damped-wave oscillations of 10, 5, 2, and 1 nanoseconds per cycle for checking the sweep rates of fast sweep oscilloscopes such as Sampling Timing Units. Accuracy of the unit is within 3%.

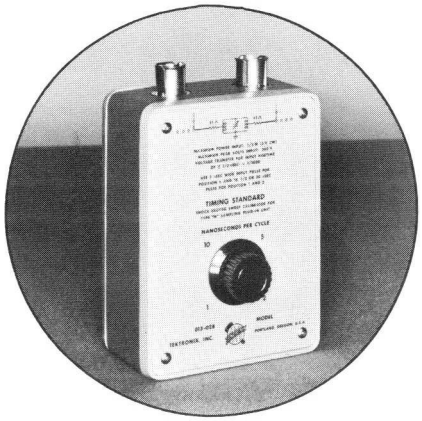

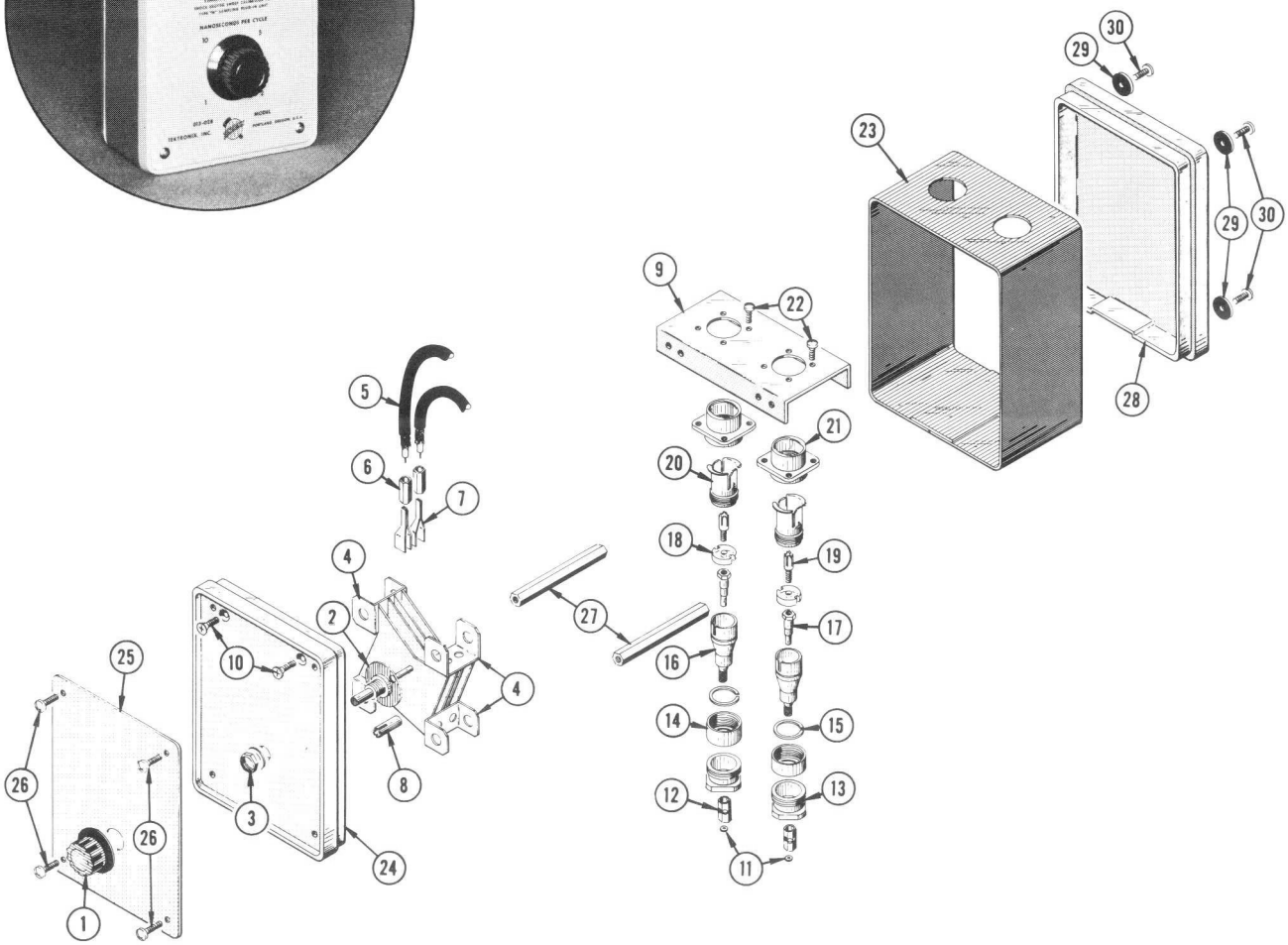

REF. NO.	PART NO.	SERIAL/MODEL NO. EFF.	SERIAL/MODEL NO. DISC.	QTY.	DESCRIPTION
1	366-0117-00			1	KNOB, charcoal--NANOSECONDS PER CYCLE
	- - - - - -			-	knob includes:
	213-0004-00			1	SCREW, set, 6-32 x 3/16 inch, HSS
2	260-0369-00			1	SWITCH, unwired--NANOSECONDS PER CYCLE
	- - - - - -			-	mounting hardware: (not included w/switch)
	210-0012-00			1	LOCKWASHER, internal, 3/8 ID x 1/2 inch OD
3	210-0413-00			1	NUT, hex., 3/8-32 x 1/2 inch

DATA SHEET

NO. 061-0857-00

DATE OCT. 1967 (R)

PLUG-IN EXTENSION
(Part No. 013-0034-00)

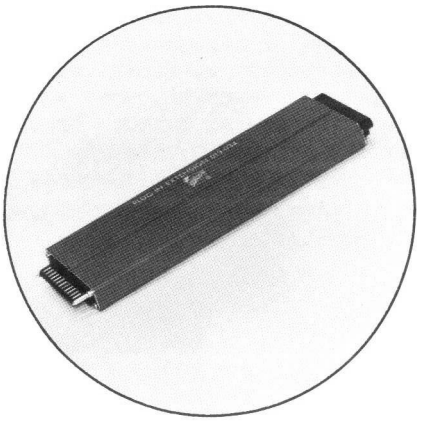

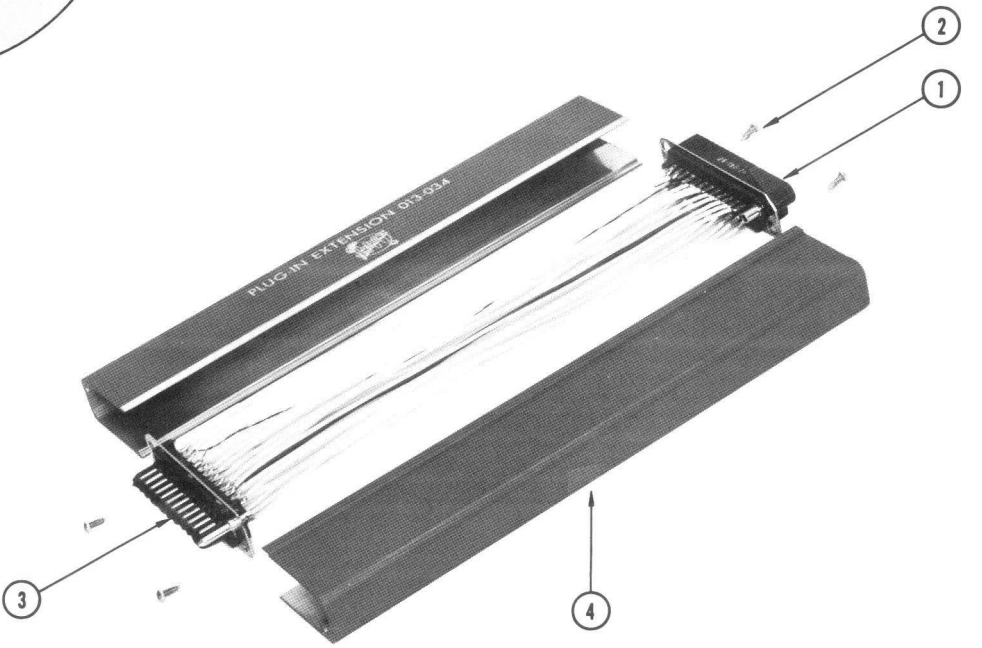

REF. NO.	PART NO.	SERIAL/MODEL NO. EFF.	SERIAL/MODEL NO. DISC.	QTY.	DESCRIPTION
1	131-0148-00			1	CONNECTOR, chassis mt., 24 contact, female
2	213-0119-00			4	SCREW, thread forming, 4-24 x 3/8 Pan HS
3	131-0149-00			1	CONNECTOR, chassis mt., 24 contact, male
4	200-0434-00			2	COVER, plug-in extension

PUBLICATION NO.

061-0861-00
August 1965
(Revised)

PLUG-IN EXTENSION
(Part No. 013-0055-00)

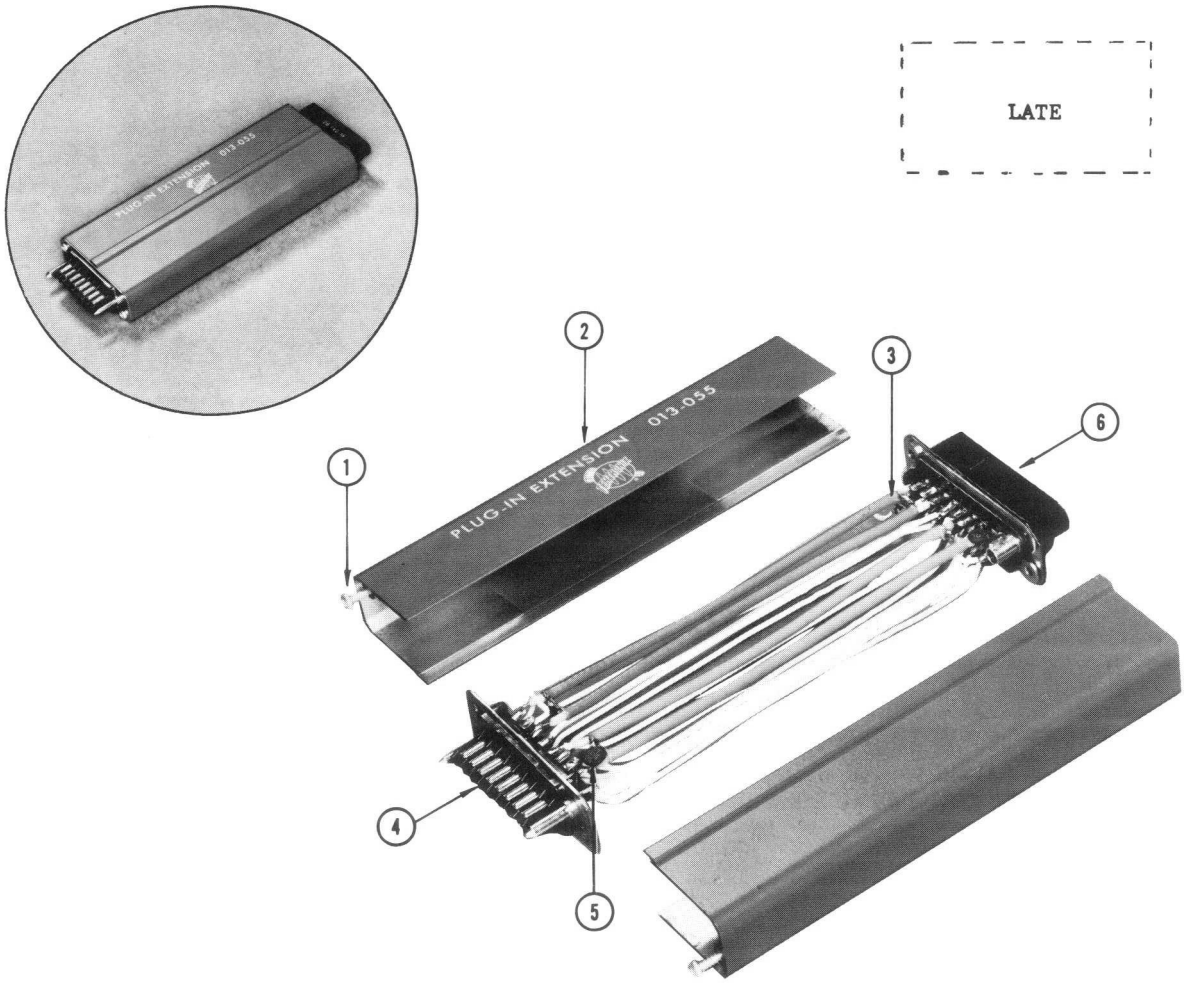

REF. NO.	PART NO.	SERIAL/MODEL NO. EFF.	SERIAL/MODEL NO. DISC.	QTY.	DESCRIPTION
1	213-0119-00			4	SCREW, thread forming, 4-24 x 3/8 inch, PHS, phillips
2	200-0432-00			2	COVER, plug-in extension
3	175-0055-00			5	CABLE, coaxial, 93 Ω, w/jacket, 5-3/4 inch
4	131-0017-00			1	CONNECTOR, 16 contact, male
5	283-0000-00			2	CAPACITOR, 0.001 μF, disc type, 500 V
6	131-0018-00			1	CONNECTOR, 16 contact, female

TU-5/105 ADAPTER
(Part No. 013-0075-00)

The Tektronix TU-5/105 Adapter allows the Tektronix Type 105 Square-Wave Generator to drive the TU-5 Pulser. The TU-5 requires an input signal which is always above ground. The Adapter shifts the Type 105 output level from below ground to above ground. The TU-5 can be used at any frequency within the limits of the Type 105, above 1 kc. The higher output frequencies provide a brighter crt display when fast sweep rates are used.

Circuit Description

Capacitor C1 removes the dc component from the Type 105 output waveform. Diode D2 clamps the waveform so that only a positive output waveform appears at the adapter output. Diode D1 provides reverse-polarity voltage protection for capacitor C1.

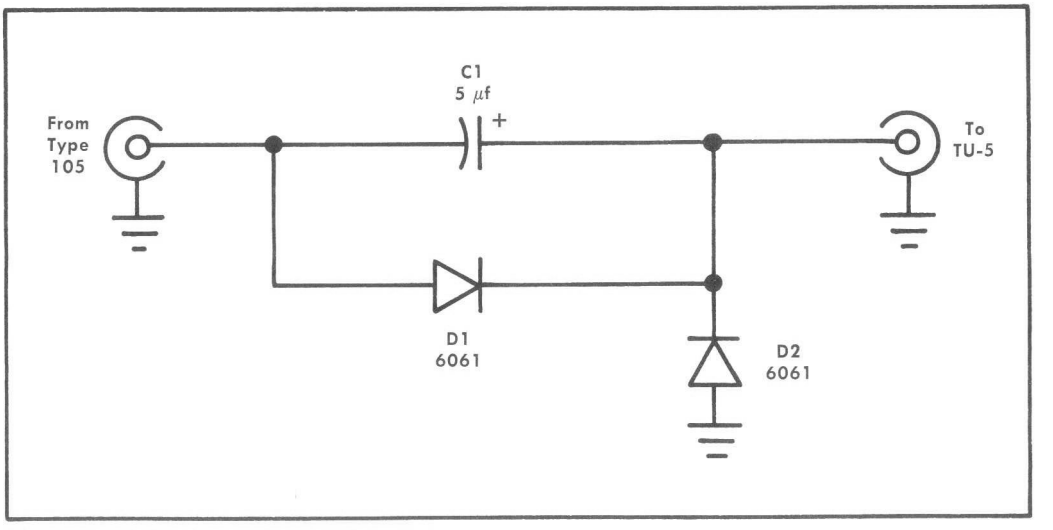

Schematic of TU-5/105 Adapter

PLUG-IN EXTENSION
(PART NO. 013-0077-00)

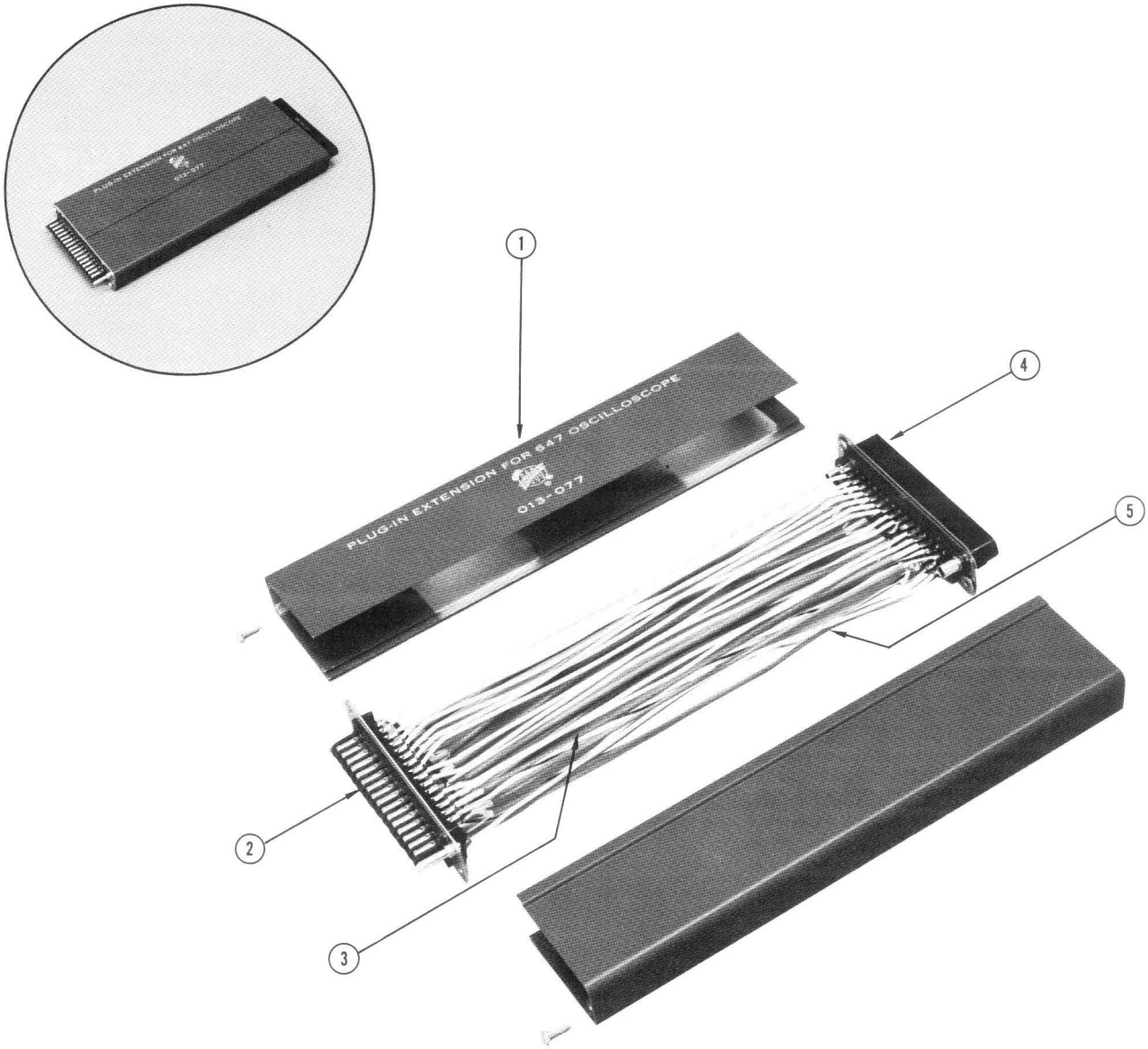

REF. NO.	PART NO.	SERIAL/MODEL NO. EFF.	SERIAL/MODEL NO. DISC.	QTY.	DESCRIPTION
1	200-0545-00			2	COVER, plug-in extension
	- - - - - -			-	Mounting Hardware: (not included)
	213-0119-00			4	SCREW, 4-24 x 3/8 inch, phillips, pan head
2	131-0096-00			1	CONNECTOR, chassis mount,
				-	32 contact, male
3	175-0284-00			Ft.	CABLE, coax., 50 Ω, 26.5 pf/ft.,
	- - - - - -			-	9 inches
4	131-0097-00			1	CONNECTOR, chassis mount,
	- - - - - -			-	32 contact, female
5	175-0055-00			Ft.	CABLE, coax., 93Ω w/jacket,
	- - - - - -			-	9 inches

PUBLICATION NO.
062-0048-00

AUGUST 1965
(Revised)

PLUG-IN RESISTOR BOARD
(Part No. 013-0078-00)

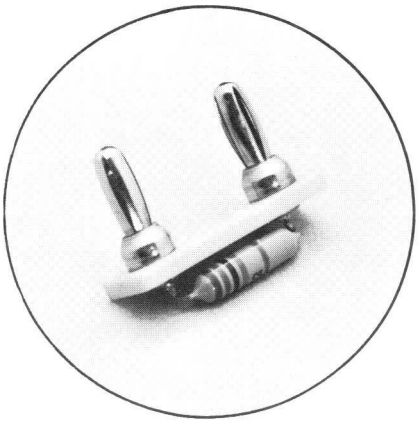

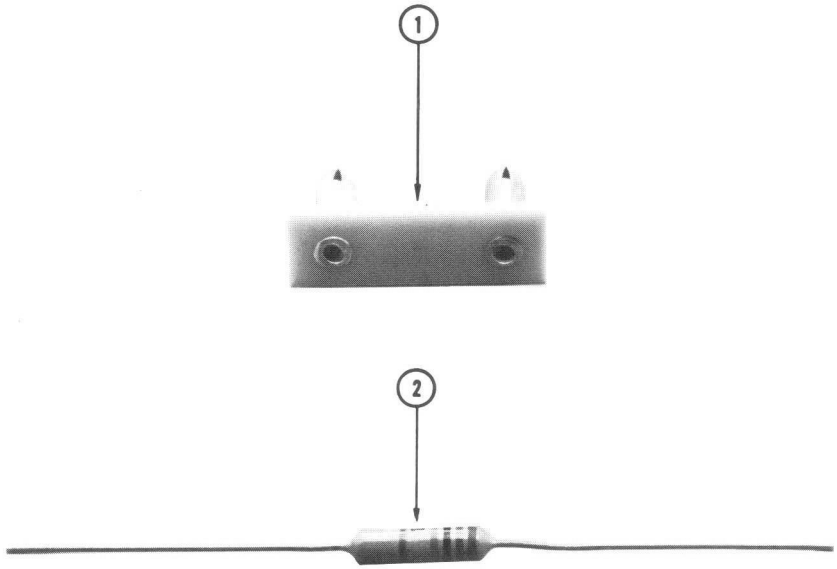

REF. NO.	PART NO.	SERIAL/MODEL NO. EFF.	SERIAL/MODEL NO. DISC.	QTY.	DESCRIPTION
1	392-0124-00			1	BOARD, resistor
2	323-0649-00			1	RESISTOR, 150 k, 1/2 W, Prec., ±1%
	- - - - - -			-	

DATA SHEET NO.
061-0967-00
DECEMBER 1965
(Revised)

DELTA STANDARD
(Part No. 015-0001-00)

The Delta Standard provides accurate steps of capacitance and inductance for adjusting the Type 130 L-C Meter. Accuracy of the unit is within 1%.

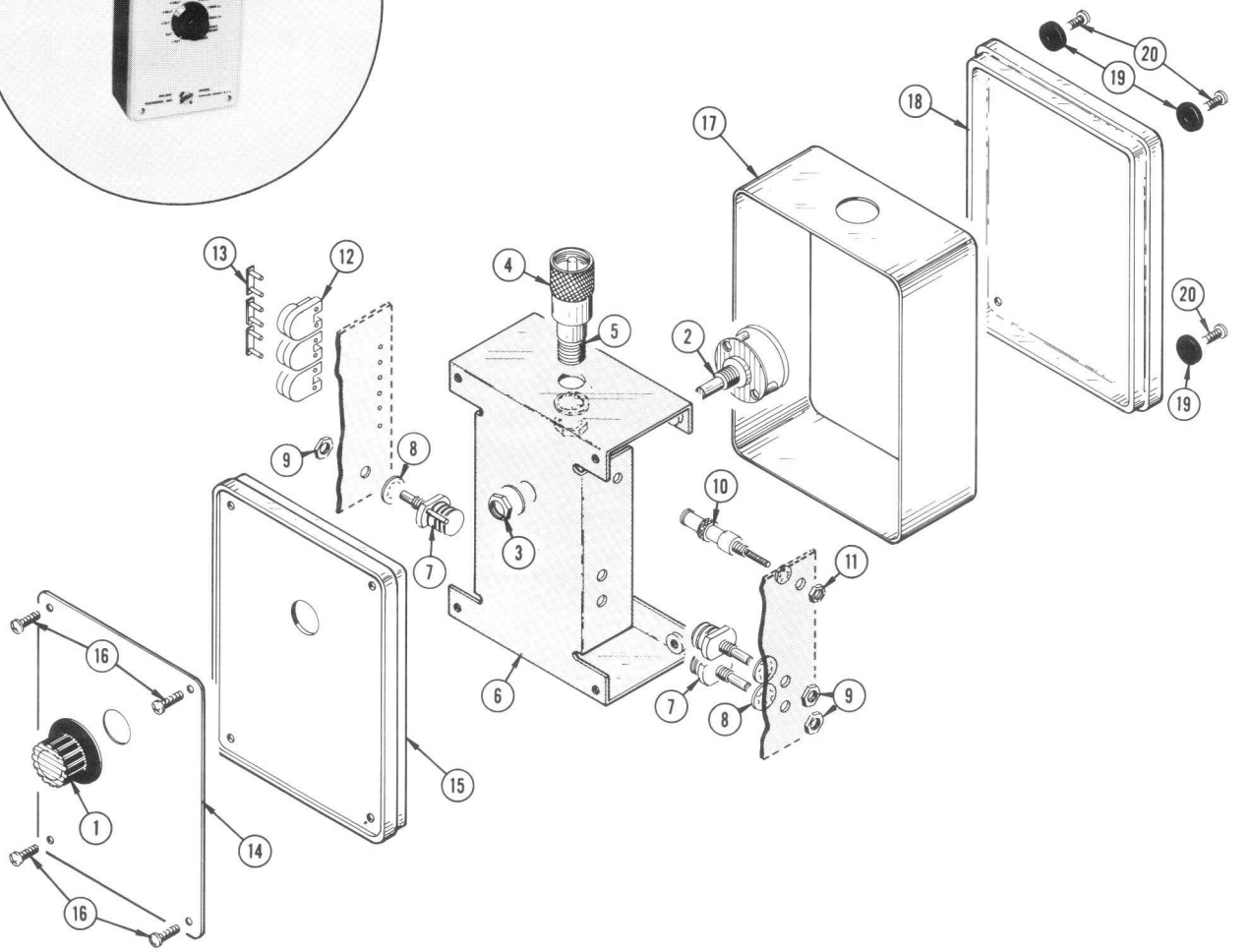

REF. NO.	PART NO.	SERIAL/MODEL NO. EFF.	SERIAL/MODEL NO. DISC.	QTY.	DESCRIPTION
1	366-0028-00	MDL 1	MDL 1	1	KNOB, black
	366-0117-00	MDL 2		1	KNOB, charcoal
	- - - - - -			-	knob includes:
	213-0004-00			1	SCREW, set, 6-32 x 3/16 inch, HSS
2	260-0429-00			1	SWITCH, unwired
	- - - - - -			-	mounting hardware:
	- - - - - -			-	(not included w/switch)
	210-0840-00			1	WASHER, flat, 0.390 ID
	- - - - - -			-	x 9/16 inch OD
3	210-0413-00			1	NUT, hex., 3/8-32 x 1/2 inch

DATA SHEET

NO. 061-0908-00

DATE OCT. 1967 (R)

TU-5 PULSER

Tektronix Part No. 015-038

General Information

The TU-5 is a tunnel-diode which provides a fast-rise pulse for adjusting the transient response of high-frequency plug-in units such as the Tektronix Types 82 and 86.

The TU-5 must be driven by a +100-volt square pulse such as the 1-kc amplitude calibrator signal available from most Tektronix oscilloscopes. (The amplitude calibrator in the Type 560-Series, Type 647, and Type RM647 Oscilloscopes will not switch the TU-5.) A Tektronix Type 105 Square-Wave Generator may be used to drive the TU-5 if an adapter (see Fig. 1) is used. The adapter converts the negative pulse output from the Type 105 to the positive pulse required to drive the TU-5. The Type 105 should be used only at repetition rates of 1 kc and higher. Higher repetition rates will provide a brighter crt display when fast sweep rates are used.

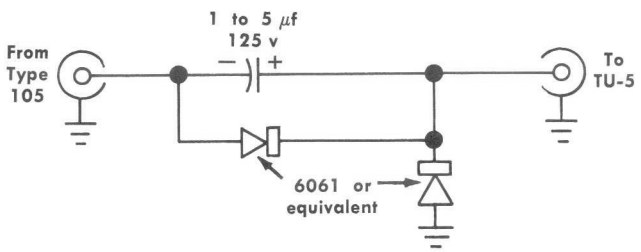

Fig. 1. Adapter for using a Type 105 to drive a TU-5.

Characteristics

Output Signal Risetime: 1.5 nanoseconds or less into 50 ohms.

Output Voltage: At least 200 millivolts into 50 ohms.

Input Voltage Required: +100-volt square wave capable of supplying 10 milliamps.

Connecting the TU-5 to the Plug-In Unit

Whenever possible, use the connection method shown in Fig. 2. Connect the termination as close as possible to the input of the plug-in to reduce undesirable reactances and provide a clean step-function at the input to the plug-in unit.

Turn off the oscilloscope Amplitude Calibrator while connecting the TU-5 to or disconnecting the TU-5 from the BNC cable. The 100 volts from the calibrator could cause a slight shock.

Setting the TU-5 Bias

The knob on the TU-5 sets the bias on the tunnel diode. The bias should be set each time the TU-5 is used. Set the bias as follows:

1. With the TU-5 and termination connected as shown in Fig. 2, set the bias control fully counterclockwise and the oscilloscope Amplitude Calibrator for a 100-volt output.

2. Set the oscilloscope vertical sensitivity at 0.1 volts/div. and the sweep rate at 0.2 millisecond/div.

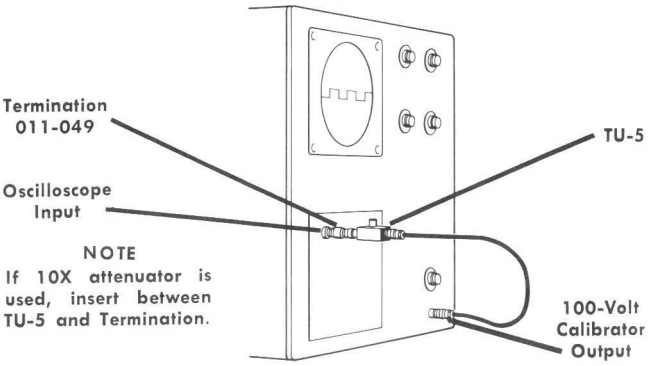

Fig. 2. Proper connection of the TU-5 and Termination to the oscilloscope Input and Calibrator.

3. Set the time-base triggering controls for a stable display. With the bias control set fully counterclockwise, the tunnel diode will not switch due to insufficient current. However, there will be about a 50-mv waveform on the crt. This is the calibrator signal feeding through the TU-5 and not the fast-rise output signal that occurs when the tunnel diode is switching.

4. Slowly turn the bias control clockwise until the waveform amplitude suddenly increases to about 2 divisions (see Fig. 3). This point is the proper bias setting.

Output Waveforms

Figs. 3 and 4 show typical output signals from the TU-5 at various sweep rates. The small intensified portion at the base of each pulse shown in Fig. 3 is the relatively slow rising portion of the calibrator signal just before the tunnel diode switches.

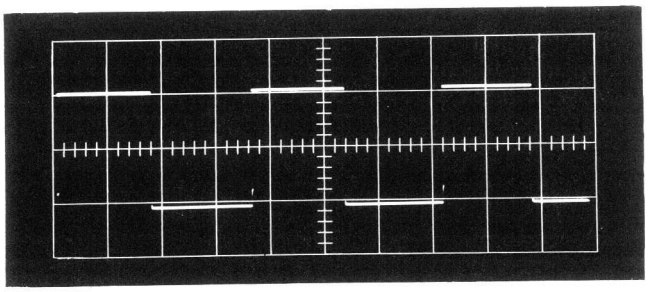

Fig. 3. Sweep rate 0.2 millisecond/div.

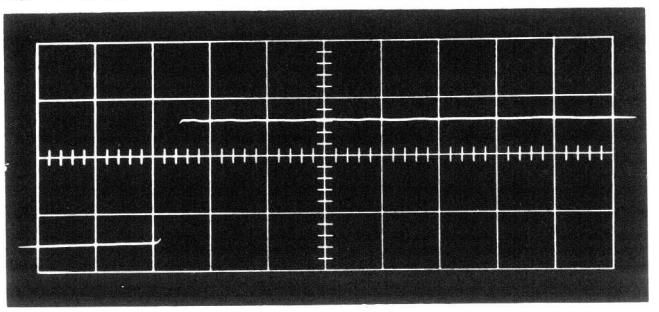

Fig. 4. Sweep rate 20 nanoseconds/div.

PARTS LIST

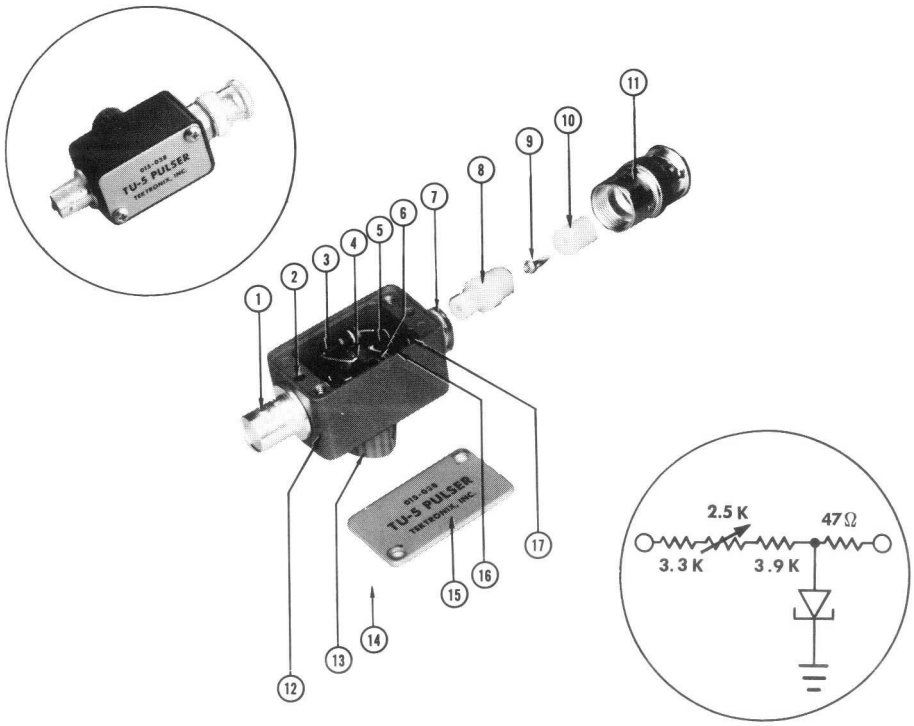

REF. NO.	PART NO.	SERIAL NO. EFF.	SERIAL NO. DISC.	QTY.	DESCRIPTION
1	131-126			1	Connector, coax, chassis mt.
	210-962			1	Washer, bevel, grey
2	213-075			2	Screw, set 4-40 x 3/32 inch
3	301-392			1	Resistor, 3.9 K, 1/2 W, 5%
4	311-443			1	Resistor, 2500 Ω var. 20%
5	152-102			1	Diode, tunnel, STD 615 10 ma
6	301-332			1	Resistor, 3.3 K 1/2 W, 5%
7	132-081			1	Nut
8	166-217			1	Tube, spacer, insulator
9	214-109			1	Pin, probe contact, male
10	358-072			1	Bushing, insulator
11	134-044			1	Plug, probe
12	202-095			1	Box, standardizer
13	366-203			1	Knob, gray
					Includes:
	213-004			1	Screw, set, 6-32 x 3/16 inch HHS
	210-046			1	Lockwasher, internal tooth
	210-583			1	Nut, hex, 5/16 inch brass 1/4-32
14	213-035			2	Screw, 4-40 x 1/4 inch PHS
15	200-427			1	Cover, pulser box
16	316-470			1	Resistor, 47 Ω, 1/4 W, 10%
17	210-223			1	Lug, solder (not shown)

175 CALIBRATION RESISTORS
(Part No. 015-0042-00)

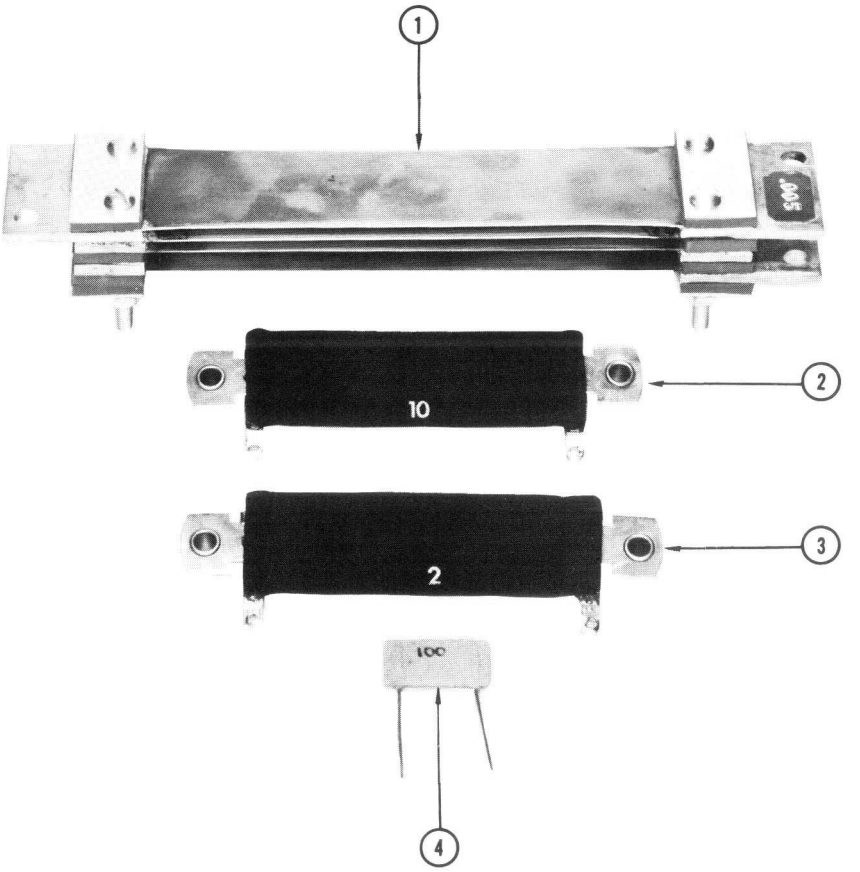

REF. NO.	PART NO.	SERIAL/MODEL NO. EFF.	SERIAL/MODEL NO. DISC.	QTY.	DESCRIPTION
1	312-0636-00			1	RESISTOR, checked, 0.005 Ω, 100 W, 0.05 Ω, 50 W, ±1%
2	312-0638-00			1	RESISTOR, checked, 10 Ω, 20 W, ±1%
3	312-0637-00			1	RESISTOR, checked, 2 Ω, 50 W, ±1%
4	312-0639-00			1	RESISTOR, checked, 100 Ω, 2 W, ±1%

DATA SHEET NO.
061-0960-00
JUNE 1967
(Revised)

TU-5 PULSER AND ACCESSORIES
(Part No. 015-0043-00)

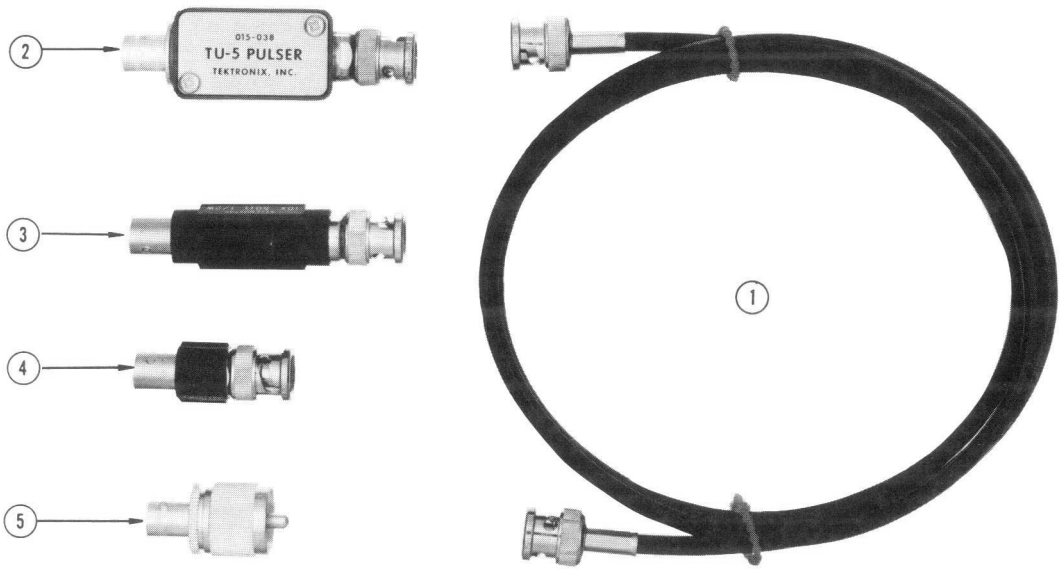

REF. NO.	PART NO.	SERIAL/MODEL NO. EFF.	SERIAL/MODEL NO. DISC.	QTY.	DESCRIPTION
1	012-0057-01			1	CABLE, assembly, 50 Ω coaxial
2	015-0038-00			1	TU-3 TUNNEL DIODE PULSER
3	011-0059-00			1	50 OHM 10X ATTENUATOR (BNC)
4	011-0049-00			1	50 OHM TERMINATION
5	103-0015-00			1	ADAPTER, probe, BNC to UHF
					FOR REPLACEABLE PARTS SEE RESPECTIVE PART NUMBERS

DATA SHEET NO.

061-0786-00
MARCH 1967
(Revised)

PROBE PULSER

Tektronix Part No. 015-0088-00

General Information

The Probe Pulser incorporates a tunnel diode which provides a fast-rise pulse for checking transient response and risetime of Tektronix high-frequency miniature-tip probes, such as the P6045 FET Probe.

The Pulser must be driven by a +100-volt square-wave pulse, such at the 1-kHz amplitude calibrator signal available from most Tektronix oscilloscopes. (The amplitude calibrators in the 560-Series and 640-Series Oscilloscopes and in the Tektronix 067-0502-00 Standard Amplitude Calibrator will not switch the Pulser.)

Characteristics

Output Impedance: $\approx 25\ \Omega$.

Output Signal Risetime: 0.5 ns or less.

Output Signal Amplitude: At least 260 mV.

Input Signal Required: +100-volt square wave capable of supplying 10 mA.

Adjusting Bias

The bias on the tunnel diode is adjusted with the knob on the Probe Pulser. The bias should be set each time the Probe Pulser is used.

To set the bias, use the following procedure.

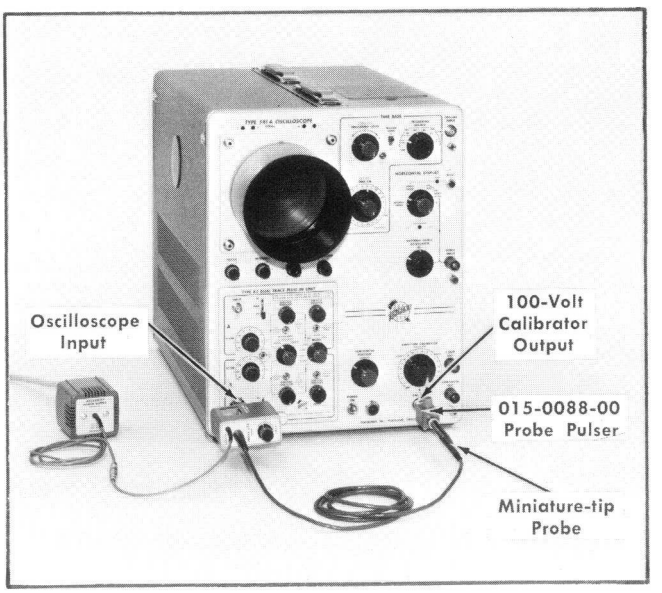

Fig. 1. Correct connection of Probe Pulser and probe to oscilloscope calibrator output and vertical channel input. (Shown with a P6045 FET Probe.)

1. Connect the Probe Pulser to the oscilloscope Calibrator Output and insert the probe tip into the Probe Pulser as shown in Fig. 1.

2. Set the oscilloscope vertical sensitivity to 0.1 V/cm and the sweep rate to 0.2 mSec/cm.

3. Set the bias control fully counterclockwise and the oscilloscope Amplitude Calibrator for a 100-volt square-wave output.

4. Set the time-base triggering controls for a stable display. With the bias control set fully counterclockwise, the tunnel diode will not switch due to insufficient current. However, there will be a waveform of $\approx$40 mV on the CRT screen. This is the calibrator signal feeding through the Probe Pulser and not the fast-rise output signal that occurs when the tunnel diode is switching.

5. Slowly turn the bias control clockwise until the waveform amplitude suddenly increases to about 3 divisions (see Fig. 2A). This indicates the tunnel-diode is now switching and this is the proper bias setting.

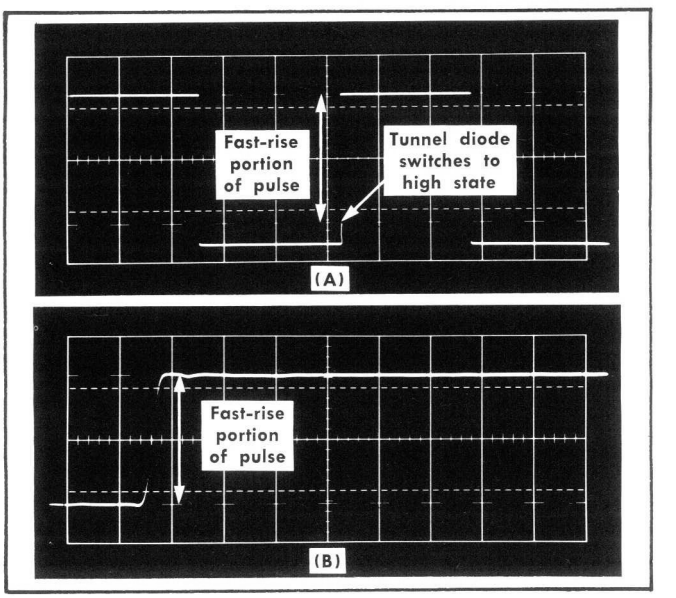

Fig. 2. Typical oscilloscope displays of pulse waveform: (A) With sweep rate of 0.2 μs/cm; (B) With sweep rate of 20 ns/cm.

Output Waveforms

Figs. 2A and B show typical output signals from the Probe Pulser at slow and fast sweep rates. The small intensified portion at the base of each pulse shown in Fig. 2A is the relatively slow-rising portion of the calibrator signal just before the tunnel diode switches. When measuring risetime, only the fast-rise portion of the output signal is used (see Fig. 2B).

COAX ADAPTER PLATE ASSEMBLY
(Part No. 016-0011-00)

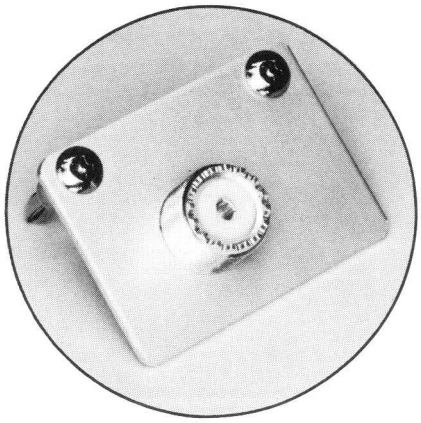

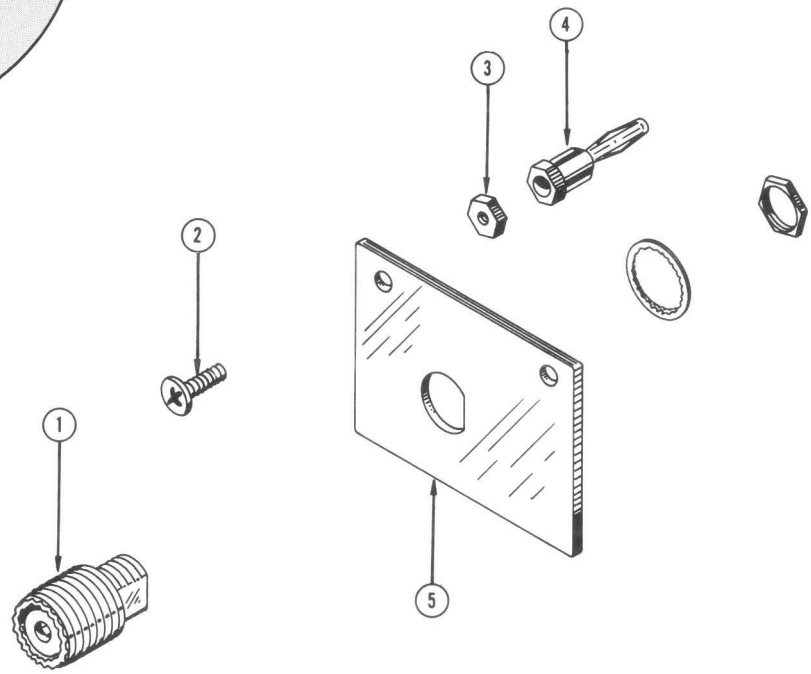

REF. NO.	PART NO.	SERIAL/MODEL NO. EFF.	SERIAL/MODEL NO. DISC.	QTY.	DESCRIPTION
1	131-0191-00			1	CONNECTOR, UHF
	- - - - - -			-	Includes:
	NO NUMBER			1	NUT
	NO NUMBER			1	LOCKWASHER
2	211-0537-00			2	SCREW, 6-32 x 3/8 inch, truss HS
3	210-0408-00			2	NUT, hex, 6-32 x 5/16 inch
4	134-0013-00			2	PLUG, banana, 6-32 tap
5	386-0909-00			1	PLATE, coax., adapter

PUBLICATION NO.

062-0029-00
August 1965
(Revised)

1000 MC TIMING STANDARD
(Part No. 017-0019-00)

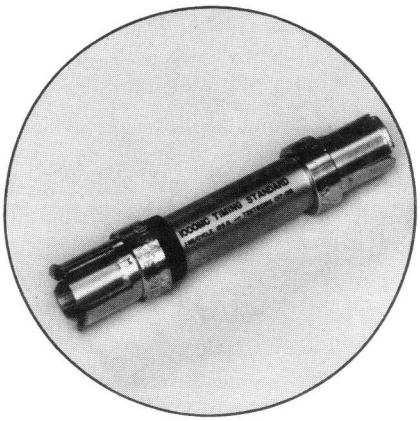

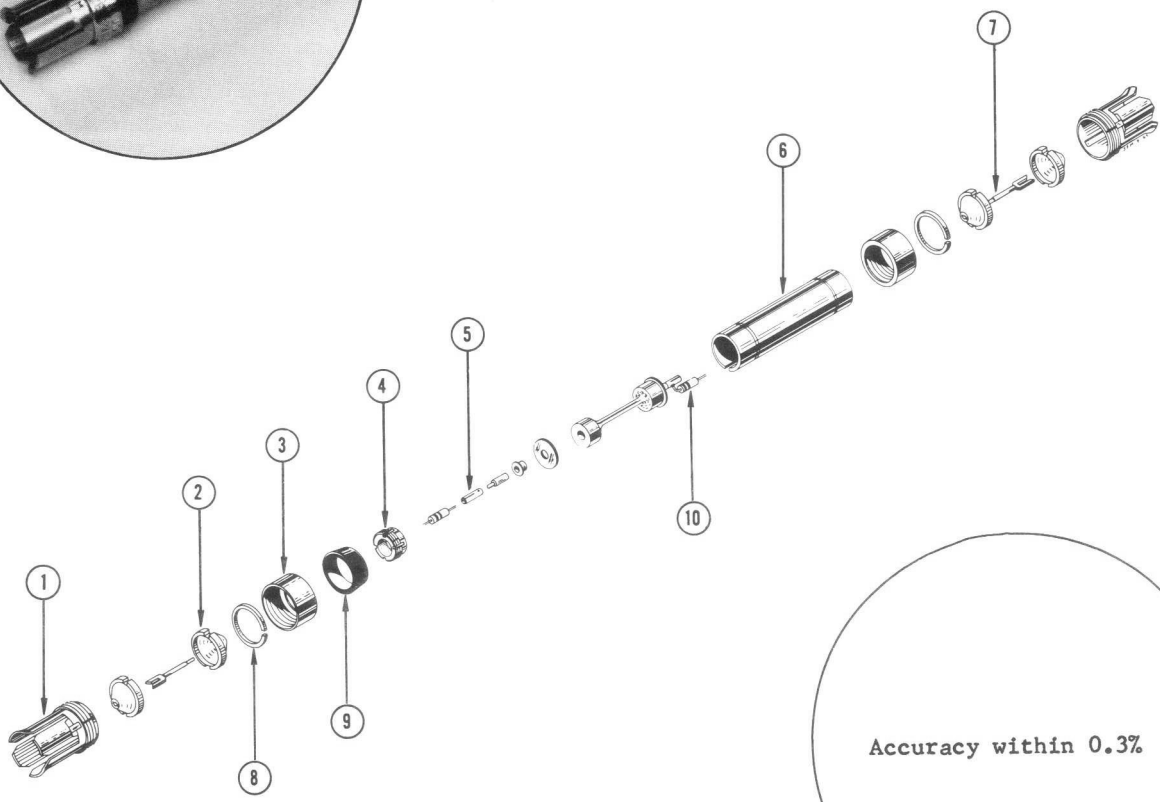

Accuracy within 0.3%

REF. NO.	PART NO.	SERIAL/MODEL NO. EFF.	SERIAL/MODEL NO. DISC.	QTY.	DESCRIPTION
1	132-0102-00			2	CONNECTOR, outer
2	132-0011-00			4	INSULATOR
3	132-0001-00			2	NUT, coupling
4	210-0547-00			1	NUT, tunning
5	132-0014-00			2	SLEEVE, transition
6	205-0037-00			1	SHELL
7	132-0015-00			2	CONTACT ASSEMBLY
8	132-0007-00			2	SNAP RING
9	354-0151-00			1	RING
10	316-0102-00			2	RESISTOR, 1k, 1/4 W, 10%

FOR REPLACEMENT PARTS NOT LISTED CONTACT YOUR TEKTRONIX FIELD OFFICE.

DATA SHEET

NO. 062-0158-00

DATE OCT. 1967 (R)

CURRENT PROBE CAL ADAPTER
(Part No. 017-0031-00)

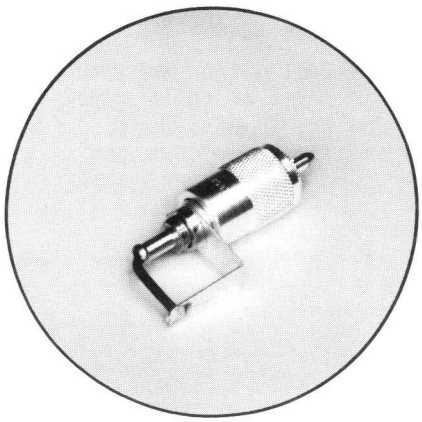

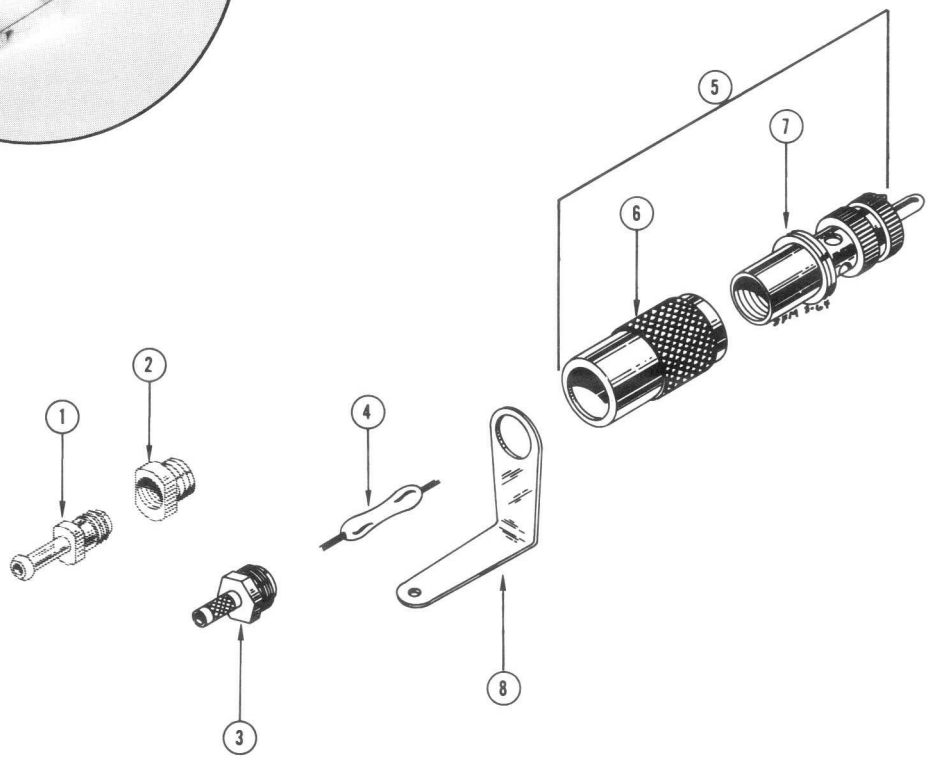

REF. NO.	PART NO.	SERIAL/MODEL NO. EFF.	SERIAL/MODEL NO. DISC.	QTY.	DESCRIPTION
1	358-0089-00	EARLY		1	BUSHING, outer
2	210-0474-00	EARLY		1	NUT
3	358-0127-00	LATE		1	BUSHING, assembly
	166-0201-00			1	TUBE, sleeve
4	309-0336-00			1	RESISTOR, 24.5 K, 1/2 w, prec. 1%
5	131-0058-00			1	CONNECTOR, cable end, coax.
	- - - - - -			-	Consisting Of:
6	200-0026-00			1	COVER, coax. connector
7	131-0196-00			1	CONNECTOR, coax., 1 contact
8	406-0647-00			1	BRACKET, calibrator

PUBLICATION NO.

062-0145-00
August 1965
(Revised)

"N" UNIT CAL ADAPTER
(Part No. 017-0074-00)

The N UNIT CAL ADAPTER is a precision voltage divider to provide a constant input voltage of 40 mv for calibrating the gain of the Type N Sampling Plug-In Unit.

To use, connect the CAL ADAPTER to the oscilloscope AMPLITUDE CALIBRATOR output and the GR connector at the other end of the short cable to the SIGNAL INPUT connector on the N unit. Set the AMPLITUDE CALIBRATOR output to 50 volts. Connect a lead from the TO EXT. HORIZ. connector on the Type N unit to the HORIZ. INPUT connector on the oscilloscope. Set the HORIZONTAL DISPLAY switch to EXT. X 1.

Turn the TRIGGER SENSITIVITY on the Type N unit to the FREE RUN position. Two lines of dots should now appear on the crt. Center the two lines, using the VERTICAL POSITION control on the Type N unit. Adjust the Type N GAIN SET capacitor, C 6417, until the two traces are 4 cm apart.

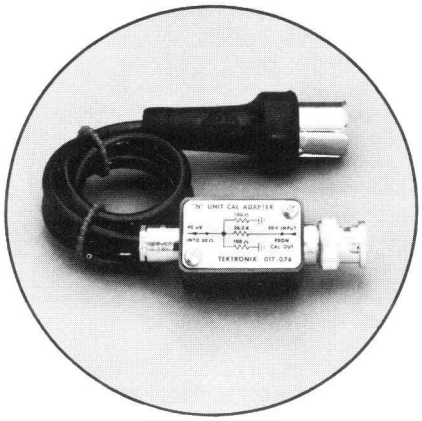

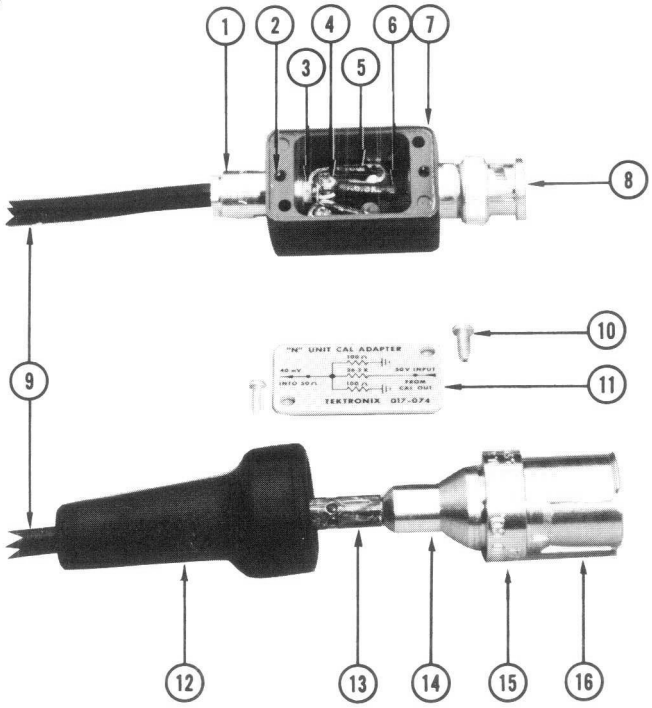

PUBLICATION NO.

061-0957-00
August 1965
(Revised)

067-0500-00 CALIBRATION FIXTURE

CRT Deflection Capacitance Normalizer

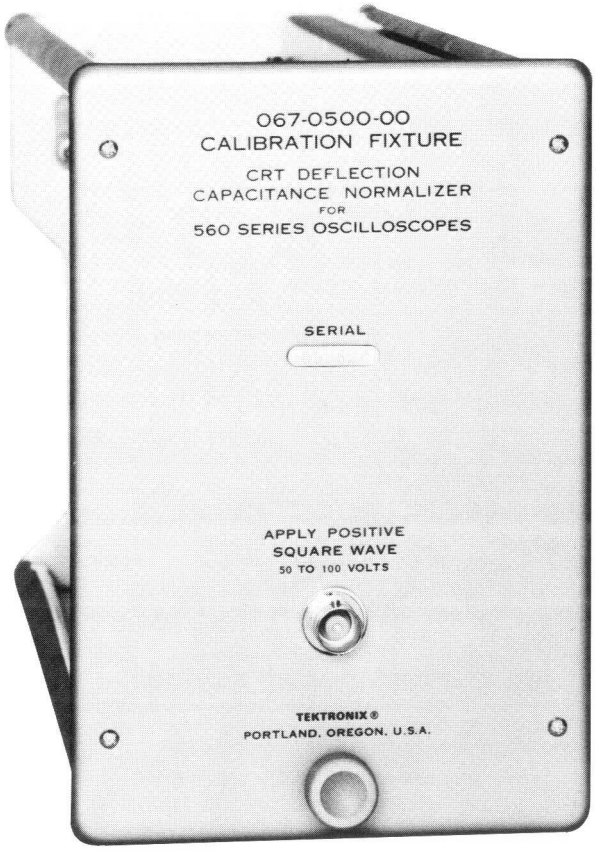

The 067-0500-00 is a plug-in unit for normalizing CRT deflection plate capacitance in 560 series instruments.

The plates of the Schmitt multivibrator are connected push-pull through time constant dividers to the CRT deflection plate. A squarewave approximately 5 cm high will be displayed when a positive squarewave of 50 to 100 volts in amplitude is applied to the input. C760 or C761 in 560 series scopes is adjusted for optimum square corner (no rolloff or spike) to achieve normalization.

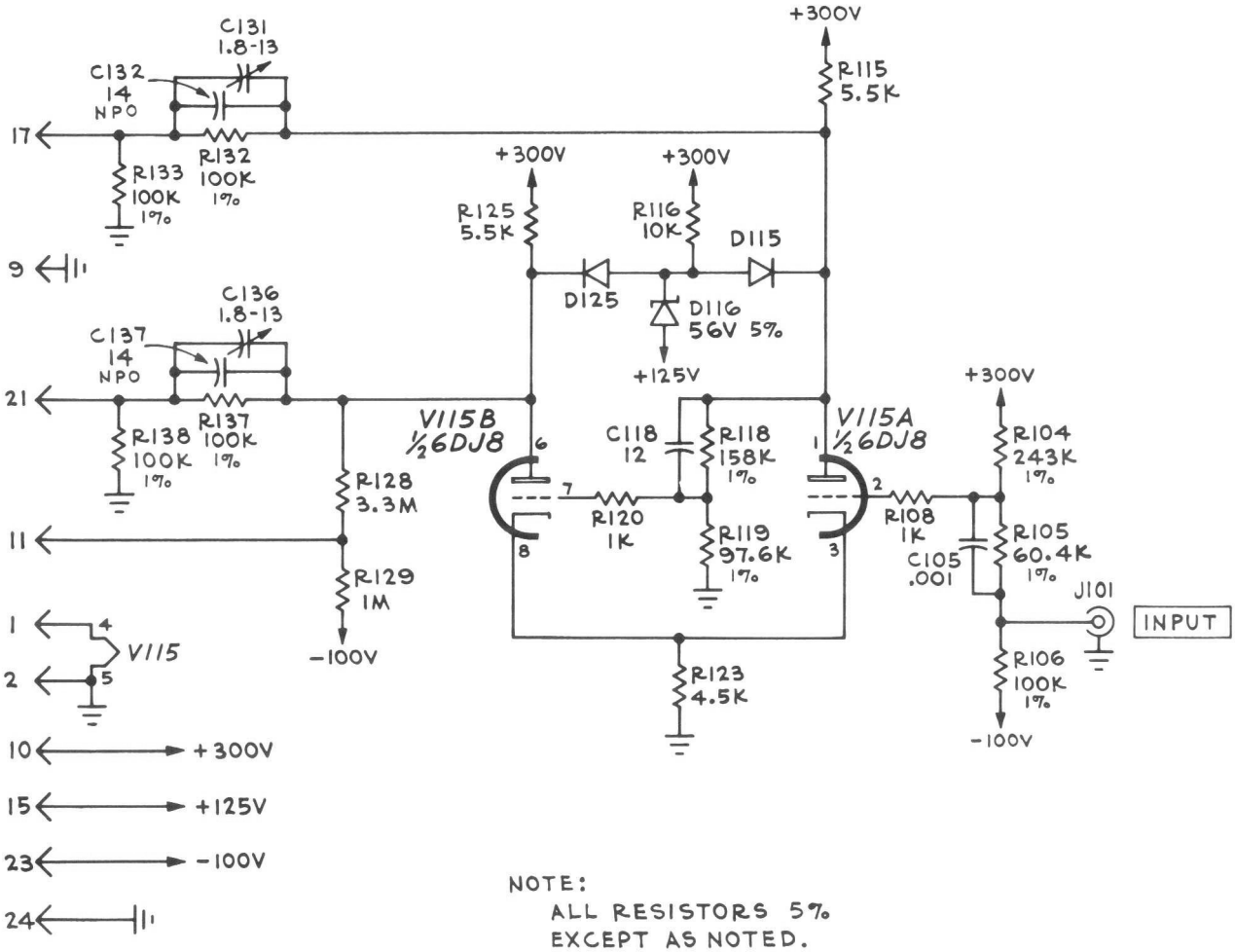

NOTE:
ALL RESISTORS 5%
EXCEPT AS NOTED.

067-0501-00 CALIBRATION FIXTURE

Strobe/Trigger Extender Cable

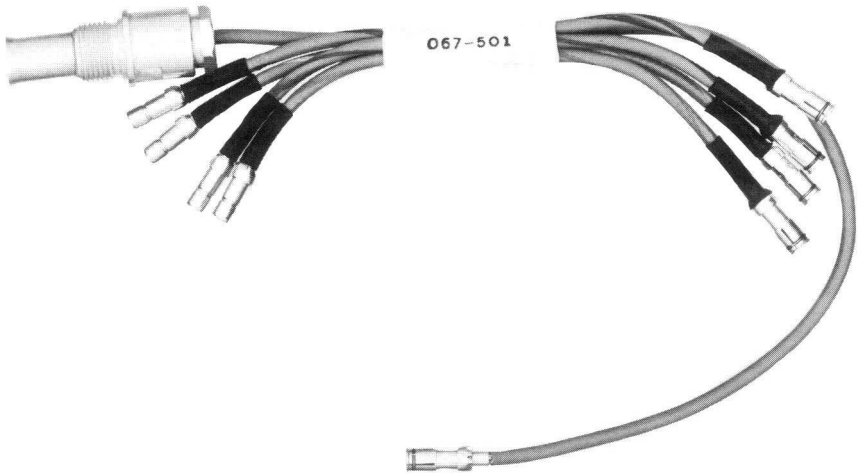

REF. NO.	PART NO.	SERIAL/MODEL NO. EFF.	SERIAL/MODEL NO. DISC.	QTY.	DESCRIPTION
	067-0501-00				The TYPE 067-0501-00 is an assembly of five 50 ohm impedance cable. The cables are equipped with suitable connectiors to extend the strobe lines and the blocking oscillator trigger signal cable from the timing unit, when the 4S2 or 4S3 is operating with the Gate board extended.

DATA SHEET NO.

062-0807-00

FEBRUARY 1967

067-0502-00 CALIBRATION FIXTURE

Standard Amplitude Calibrator

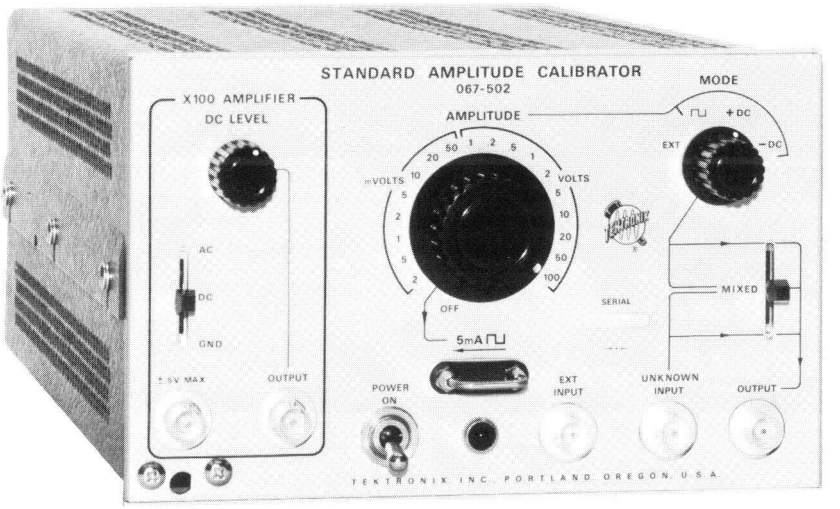

The 067-0502-00 provides accurate (±0.25%) voltage for use in calibrating Tektronix Equipment. Amplitudes are available from 0.2 mV to 100 V in a 1-2-5 sequence. An electomechanical switching circuit provides for comparison between one of the internally generated voltages and an unknown external voltage. A general-purpose amplifier with a voltage gain of 100 (±1%) is built into the instrument for the purpose of accurately amplifying low-level signals prior to measurement of those signals.

067-0502-00

STANDARD AMPLITUDE CALIBRATOR

General Information

The 067-0502-00 STANDARD AMPLITUDE CALIBRATOR provides accurate (±0.25%) voltages for use in calibrating Tektronix Equipment. Amplitudes are available from 0.2 mV to 100 V in a 1-2-5 sequence. Waveforms available are:

1. Positive-going 1 kHz squarewave.
2. Positive and negative-going 60 Hz squarewaves.
3. Positive DC voltage.
4. Negative DC voltage.
5. Currents to 5 mA DC, also 1 kHz squarewave currents in the current loop.

An electromechanical switching circuit provides for comparison between one of the internally generated voltages and an unknown external voltage. A general-purpose amplifier with a voltage gain of 100 (± 1%) is built into the instrument for the purpose of accurately amplifying low-level signals prior to measurement of those signals.

Dimensions: Approximately 5" H x 8" W x 12-1/4" D

Weight: Approximately 11 pounds

Operational Data

Input Connector

Input to X100 amplifier. Maximum input signal voltage (AC or DC coupled) is 0.5 volts p-p. Maximum input DC voltage (AC coupled) is ± 600 volts.

Output Connector

Output of X100 amplifier. ≥ ± 20 volts, ± 5 mA maximum output.

DC Level Control

Adjusts output DC level of X100 amplifier.

AC-DC-Gnd Switch

Selects coupling mode of X100 amplifier.

Amplitude E Switch

Selects amplitude of 1 kHz squarewave, + and - DC, and connects 5 mA current loop.

067-0503-00 CALIBRATION FIXTURE

Precision DC Divider

REF. NO.	PART NO.	SERIAL/MODEL NO. EFF.	SERIAL/MODEL NO. DISC.	QTY.	DESCRIPTION
	067-0503-00				This Precision DC Divider is used to test the attenuation ratio of the input attenuators in such plug-ins as the W unit, 10A1 and 3A7.

DATA SHEET NO.
062-0809-00
FEBRUARY 1967

Purpose

The Tektronix Precision DC Divider is primarily used to calibrate DC attenuations of 10:1 and 100:1 attenuators.

Performance Requirements

Ratio Accuracy	± 0.01% (when loaded with 1 megohm ± 1%)
Temperature Coefficient	10 ppm/°C, 20°C to 35°C

Voltage Input

Input Resistance	Approximately 10 k
Maximum Input Voltage	± 40 VDC

Operation Instructions

A stable source of DC voltage is connected to the voltage input binding post and to the input of the attenuator to be tested. Outputs of the two attenuators are then compared. Comparison is normally accomplished using an oscilloscope with a differential amplifier, such as a Tektronix Type 547 Oscilloscope with a Type W Differential Comparator. Error of the attenuator under test is the deviation from the correct output voltage expressed as a percentage of the output voltage.

SCHEMATIC

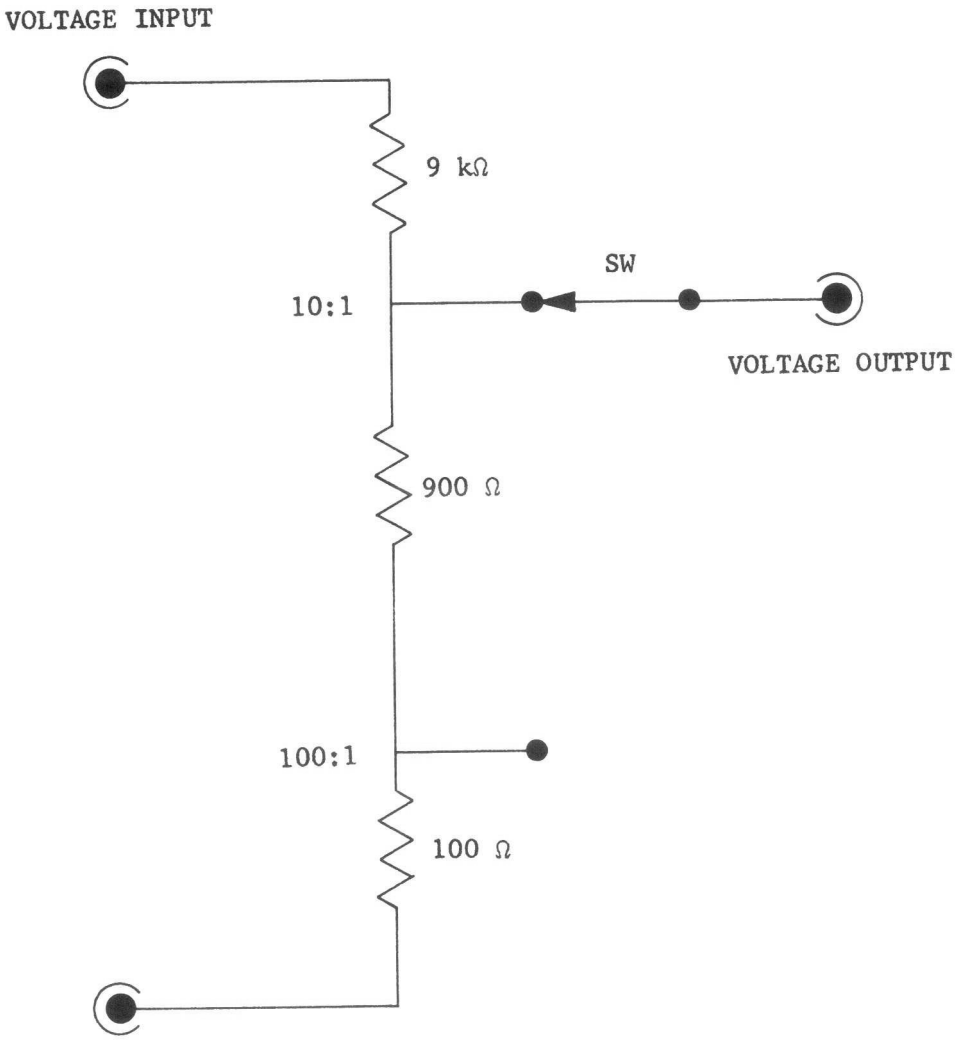

067-0505-00 CALIBRATION FIXTURE

Series 6 Extender

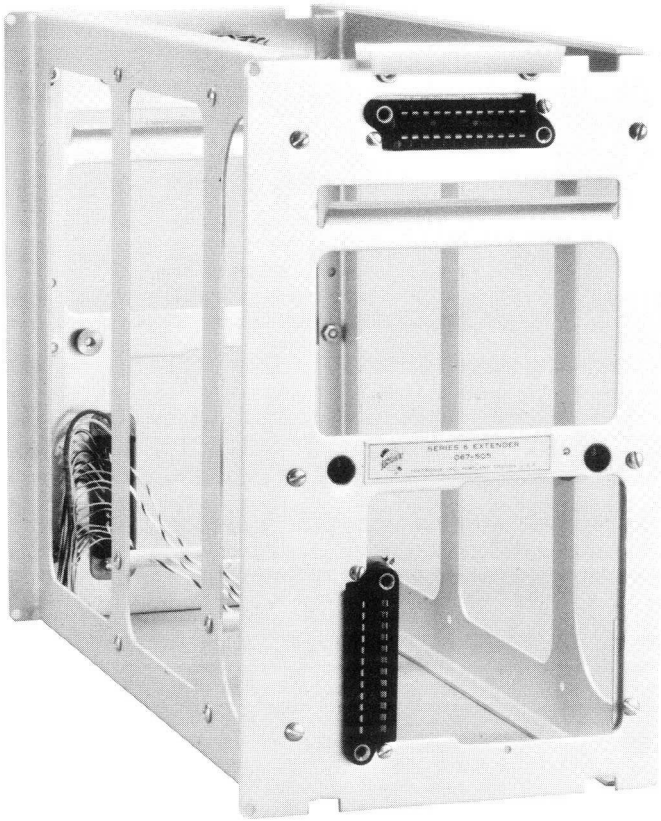

Primarily, this extender is for use with the RM567 when calibrating or trouble shooting the 6R1/6R1A. It has a locking mechanism at each end which secures the extender to the RM567 at one end, and the 6R1/6R1A to the other end. The RM567 may then be tilted in any of its tilt lock positions, if equipped, if there is sufficient clearance in front of the console to do so.

It may also be used in place of flexible extenders in the cabinet models.

067-0507-00 CALIBRATION FIXTURE

0 Unit Grid Current Checker

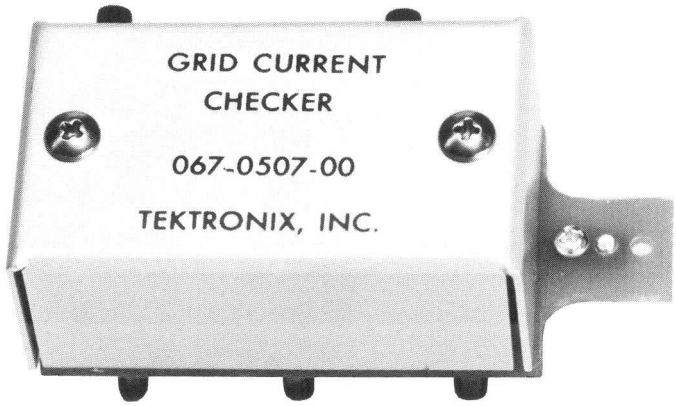

REF. NO.	PART NO.	SERIAL/MODEL NO. EFF.	SERIAL/MODEL NO. DISC.	QTY.	DESCRIPTION
	067-0507-00			-	The 067-0507-00 Grid Current Checker is used to measure grid current in the Type 0 and other operational amplifiers. It matches, in size and general appearance, the Gating, Compensating, Leakage Current and other adapters currently in use with operation amplifiers. Banana-plug connectors in back allow the unit to be plugged into the operational-amplifier front panel.

DATA SHEET

NO. 062-0811-00

DATE FEB. 1968(R)

OPERATING INSTRUCTIONS

1. Plug the unit into the operational amplifier channel to be tested.

2. Set the sweep rate at the value specified in the Instruction Manual Calibration Procedure for the operational amplifier.

3. Obtain a free-running trace and when the spot crosses a preselected graticule line, press the desired button.

4. Compute grid current by the formula:

$$Ig \quad EC/T$$

E Amplitude of the wave form at the end of a prescribed period.
C Capacitance being charged (0.001 μF).
T Time over which the amplitude rise is checked.

See Instruction Manual Calibration Procedure for time and amplitude values.

CALIBRATION PROCEDURE

Check for correct internal wiring, correct capacitor value and tolerance and proper operation of the push-button switches.

CIRCUIT DESCRIPTION

SW1 and SW2 are normally closed, holding C1 and C2 in a discharged condition. When one of the push-button switches is pressed, grid current charges the associated capacitor generating a sawtooth waveform representing amplitude versus time.

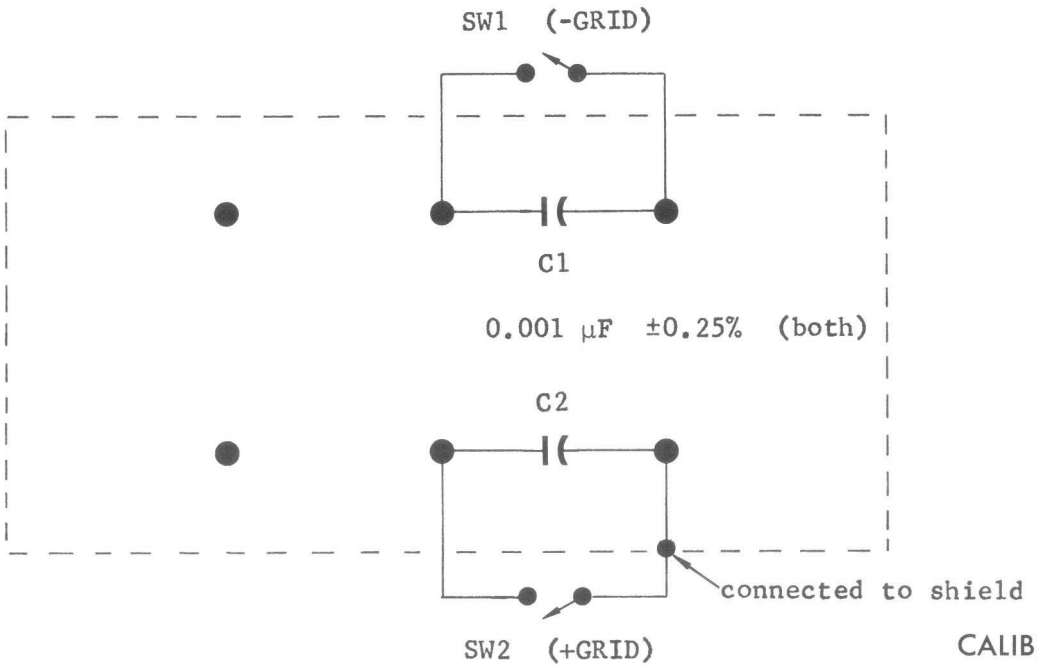

067-0508-00 CALIBRATION FIXTURE

50 ohm Amplitude Calibrator

This calibrator provides a source of voltage, the overall accuracy of which is 0.25%, from an accurate 50 ohm source resistance to calibrate equipment having a characteristic 50 ohm impedance. It may also calibrate a high impedance input provided the unit is accurately terminated in total load of 50 ohms.

067-0508-00 CALIBRATION FIXTURE

General Information

Purpose

Provides an accurate source of voltage for the calibration of equipment having 50 Ω input impedance. It may also be used to calibrate equipment with high input impedance provided the unit is connected through an accurate 50 Ω termination.

Accuracy

Overall accuracy is ±0.25%, enabling precision amplitude calibration of devices such as digital readout units or for precision comparision measurements.

Pretrigger

A pretrigger is provided sufficiently delayed to allow zero % zone levels to be established on Type 6R1 which does not have adjustable zero % zones.

Output Level

Output level is adjustable from 12 mV to 1.2 V in increments designed to provide a constant 6 division display as the attenuators of the system are changed. A 2 V level is provided to check linearity of a sampling bridge.

A test point is provided on the front panel to check the level into the attenuator.

Power Source

Normally operates on 115 or 230 VAC, 50 to 60 Hz. Additional taps are provided on the transformer primary to shift the design-center line voltage in 10 V increments from 105 to 125 V from 210 to 250 V.

Operating Instructions

1. Connect power cord to correct line voltage (factory wired for 115 volts unless otherwise indicated by rear panel decal).

2. Connect TRIG OUT to test-scope external trigger input jack.

3. Connect OUTPUT to test-scope vertical input.

   NOTE: If test-scope vertical input is high impedance, terminate the cable in 50 Ω (± 1% accuracy required or better).

067-0510-00 CALIBRATION FIXTURE

Vertical Signal Pickoff Extension

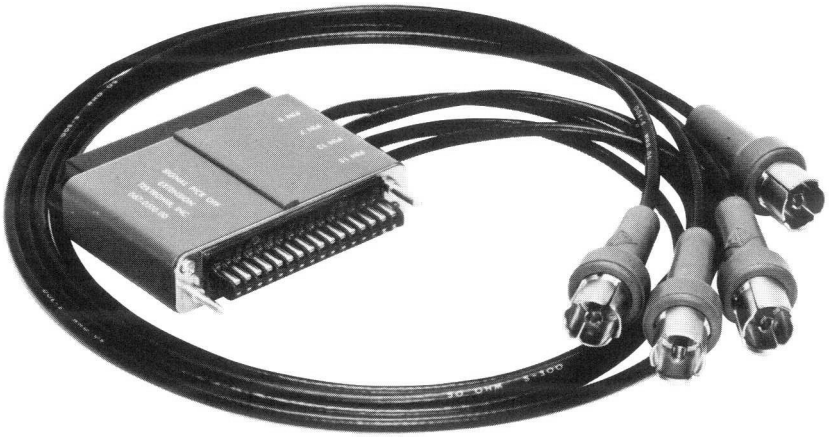

REF. NO.	PART NO.	SERIAL/MODEL NO. EFF.	SERIAL/MODEL NO. DISC.	QTY.	DESCRIPTION
					The 067-0510-00 Signal Pickoff Extension is used to measure risetime and aberrations of the 10A2A. It provides terminated push-pull vertical signal pickoffs from the 10A2A when used with a 647 or 647A and a 50 ohm sampling oscilloscope. The signal pickoff DC level is ≈ f 9 volts. It also provides push-pull trigger signal outputs from the 10A2A at ≈ 0 volts DC for the sampling oscilloscope.

DATA SHEET

NO. 062-0813-00

DATE OCT. 1967

067-0511-00 CALIBRATION FIXTURE

Variable Attenuator

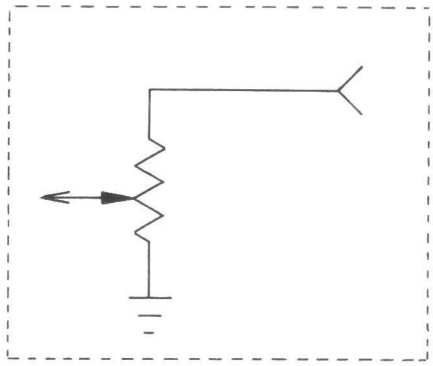

REF. NO.	PART NO.	SERIAL/MODEL NO. EFF.	SERIAL/MODEL NO. DISC.	QTY.	DESCRIPTION
	067-0511-00			-	A variable attenuator which has the end terminals of a 100 ohm potentiometer connected from input to ground and the potentiometer divider arm connected to the attenuator output. The attenuator is not matched to any particular impedence system. Unit will attenuate a 1 ns risetime pulse in a 50 ohm system with negligible distortion. The accompanying graph shows attenuator characteristics in a 50 ohm system.

DATA SHEET NO.

062-0814-00
APRIL 1967

067-0513-00 CALIBRATION FIXTURE

Tunnel Diode Pulse Generator

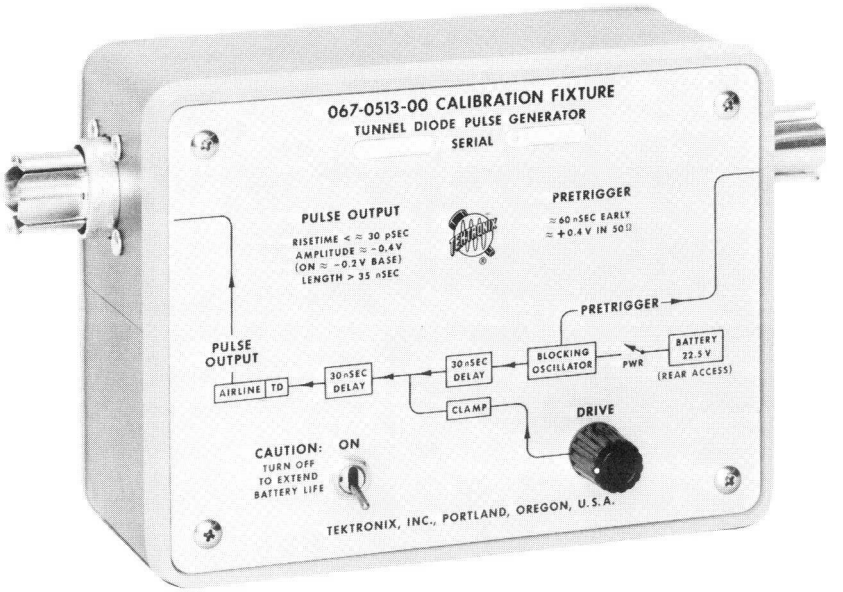

The T.D. Pulse Generator is battery powered and is used for checking step function response of all Tektronix sampling systems. It can be used with a minimum of correction due to pulse source risetime limitations.

The repetition rate varies from about 50 kHz to 150 kHz depending on battery condition. A pretrigger (60 to 70 ns early) permits operation in conjunction with any of the Tektronix sampling systems.

The pulser contains a transistor blocking oscillator, an adjustable diode drive clamp, a delay cable and a 100 mA, 6 pF, tunnel diode mounted in a special coaxial air-line environment. The free-running blocking oscillator generates a 50 ns pulse with adequate amplitude to drive the clamp, tunnel diode and pretrigger. The diode clamp, 30 ns from the blocking oscillator, flattens the negative-going pulse at a level just sufficient to switch the 100 mA tunnel diode which is another 30 ns past the clamp. This device draws about 1.5 mA. It is difficult to predict battery life but approx. 1 month can be expected with average use. New batteries may be ordered on a standard order form.

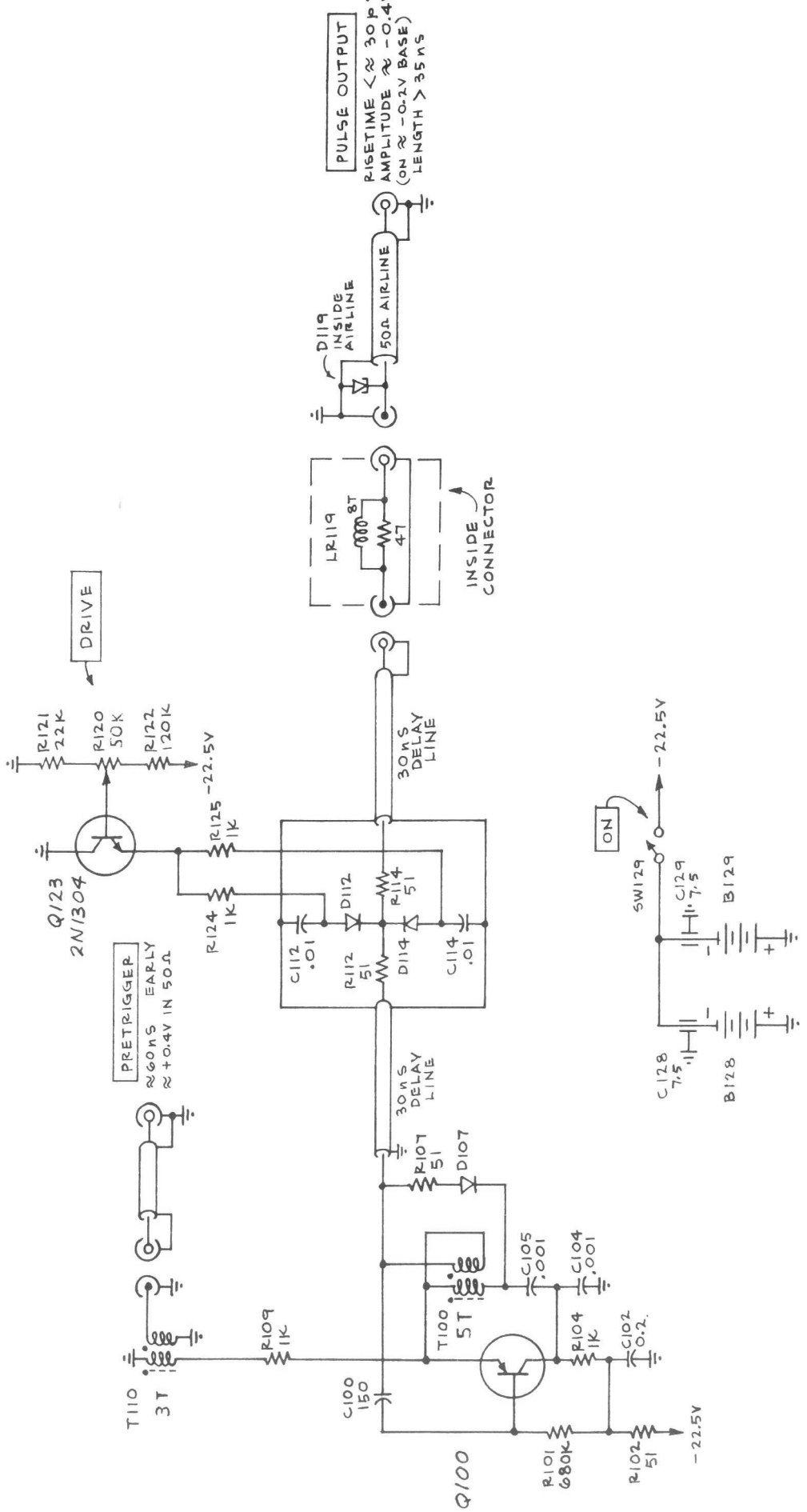

TUNNEL DIODE PULSE GENERATOR

CALIBRATION FIXTURE 067-0513-00

067-0514-00 CALIBRATION FIXTURE

AC 0-10 V Meter

REF. NO.	PART NO.	SERIAL/MODEL NO. EFF.	SERIAL/MODEL NO. DISC.	QTY.	DESCRIPTION
	067-0514-00				The 067-0514-00 AC Meter is an iron-vane, 0 to 10 volt, accurate voltmeter for use in testing and adjusting filament voltages from the saturable reactors in Tektronix Type 517/517A and Type 555 oscilloscopes. Accuracy ±2% of full scale

DATA SHEET NO.

062-0816-00

FEBRUARY 1967

067-0515-00 CALIBRATION FIXTURE

Precision 50 ohm termination

REF. NO.	PART NO.	SERIAL/MODEL NO. EFF.	SERIAL/MODEL NO. DISC.	QTY.	DESCRIPTION
	067-0515-00				A 0.1% 50 Ω termination for use with instruments that have outputs into 50 Ω. This calibration fixture is used to accurately terminate an instrument into 50 Ω to check its calibration accuracy. Its primary intent is for use with the 067-0508-00, the 50 Ω Amplitude Calibrator, but can also be used for checking the calibrator outputs into 50 Ω, of the Type 546, 547, 567 etc.

DATA SHEET NO.
062-0817-00
APRIL 1967

067-0517-00 CALIBRATION FIXTURE

Two Triggers Per Pulse

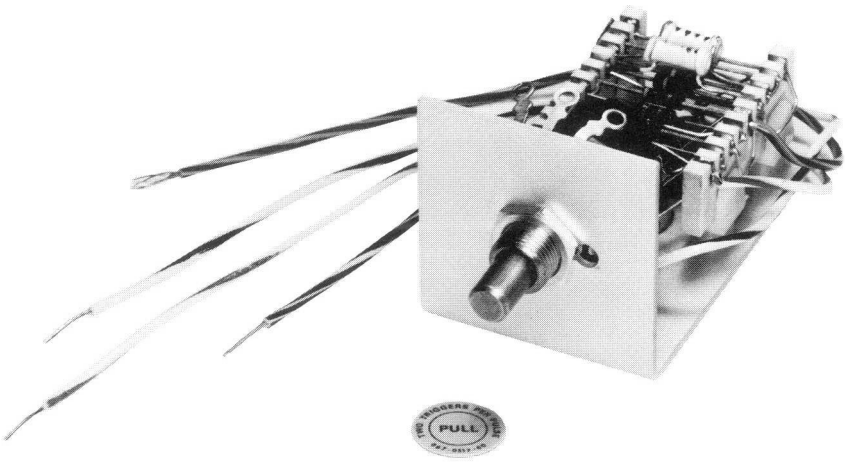

REF. NO.	PART NO.	SERIAL/MODEL NO. EFF.	SERIAL/MODEL NO. DISC.	QTY.	DESCRIPTION
	067-0517-00				The 067-0517-00 is a modification kit for the Type 111 Pretrigger Pulse Generator that will give a signal output for every other pretrigger output. A two transistor multivibrator with an emitter-follower output that provides a signal to control the collector supply voltage for Q60. The multivibrator uses a trigger signal from T-40 to provide supply voltage for Q60 only for every other trigger signal. Thus, only one pulse occurs at the PULSE OUTPUT connector for every two pulses at the PRETRIGGER OUTPUT connector. This type of signal/trigger combination is useful for checking calibration and performance of sampling systems. The front-panel VARIABLE control has been replaced by a pull-type switch and pot combination with the knob labeled PULL TWO TRIGGERS PER PULSE.

DATA SHEET NO.

062-0818-00

MARCH 1967

067-0518-00 CALIBRATION FIXTURE

Harmonic Modulator

REF. NO.	PART NO.	SERIAL/MODEL NO. EFF.	SERIAL/MODEL NO. DISC.	QTY.	DESCRIPTION
	067-0518-00				Permits simultaneous modulation of an R.F. signal with Tektronix Type 106 Squarewave Generator and with an audio generator. Recommended R.F. source is Tektronix Type 184 Time Mark Generator. The unit is designed to provide test signals for Tektronix 1L10 Spectrum Analyzer (will also be usable with future models). Modulated harmonic frequencies to 900 MHz, with amplitudes of a few microvolts, have been produced although this is considerable beyond the normal output requirement. A 60 MHz trap may be switched in to attenuate any 60 MHz component (center I.F. frequency of 1L10 is 60 MHz). Effective attenuation of this trap depends on the setting of RF VARIABLE control.

DATA SHEET

NO. 062-0819-00

DATE APRIL 1968(R)

Characteristics

MODU FREQ 1 & 2 Inputs

Coupling	DC
Maximum Input Voltage	±10 V

RF Input

Coupling	AC
Maximum Input Voltage	20 volts p-p

Operating Instructions

Test configuration for displaying modulation on a carrier with Type 1L10 Spectrum Analyzer.

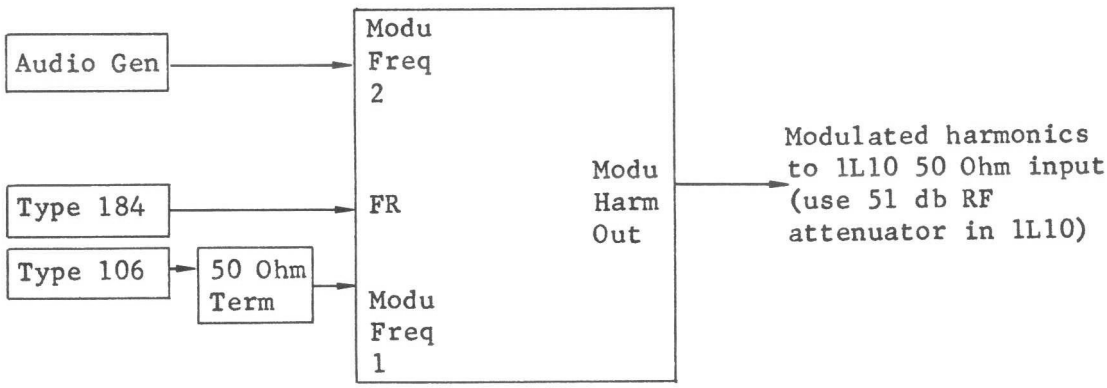

Set the audio generator and the Type 106 for the desired modulation frequencies. Set Type 184 for, 1 μs, 0.5 μs, 0.1 μs, 20 MHz or 50 MHz. The mixing ratio is varied by changing the amplitude of the outputs of two modulation generators.

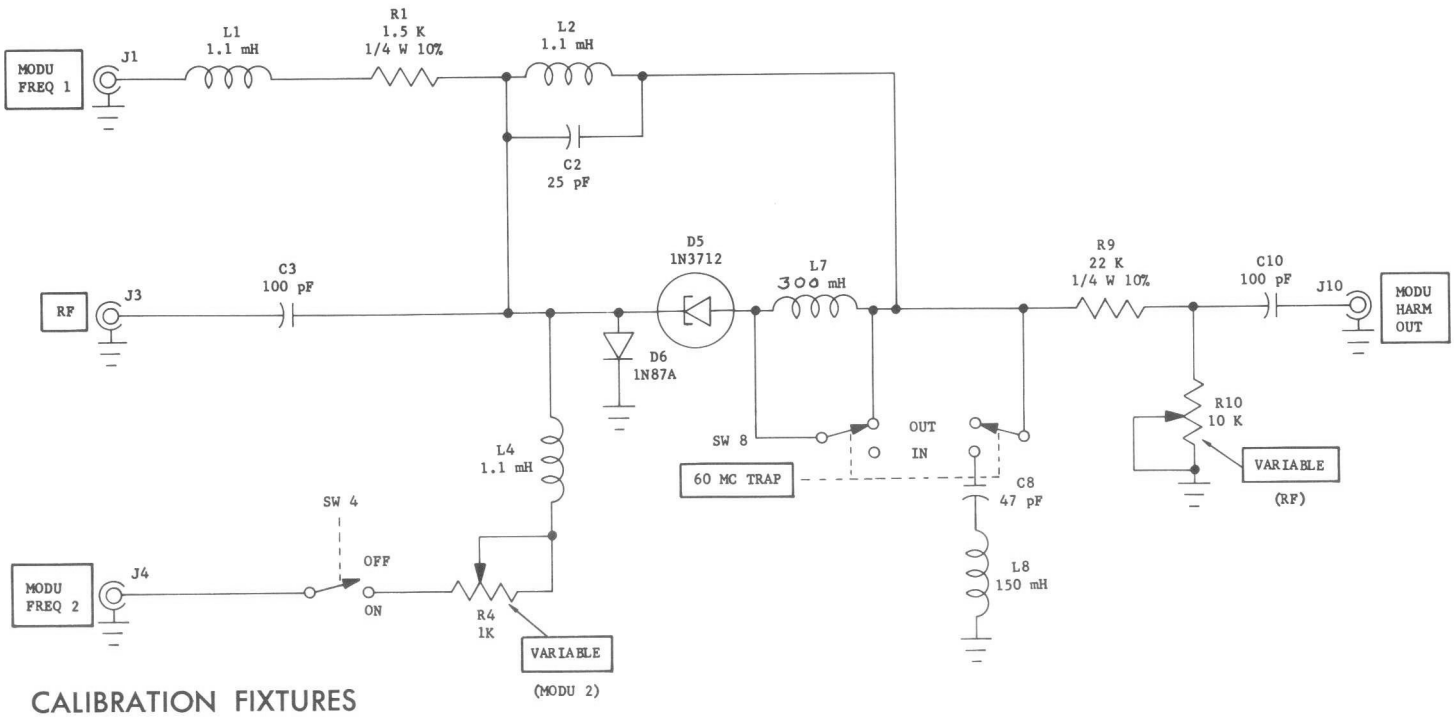

LOAD/PULSER
(Part No. 067-0521-00)

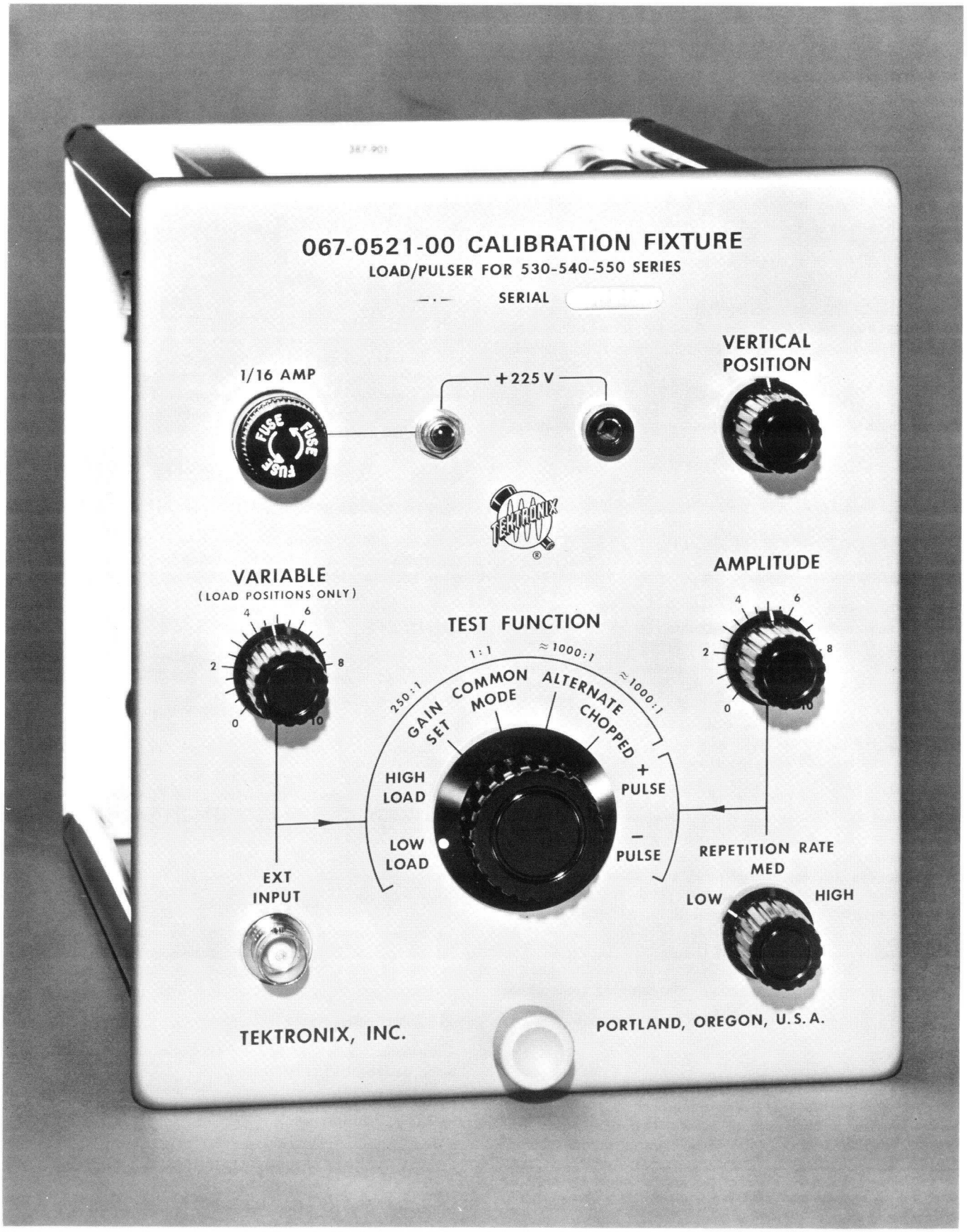

CHARACTERISTICS

General Description

The 067-0521-00 Plug-In Test Unit is a versatile single-unit calibration aid for use with all Tektronix 530-, 540-, or 550-Series Oscilloscopes using 1-series or letter-series vertical plug-in units. The 067-0521-00 is the only plug-in unit required for calibrating the oscilloscope.* An input connector on the front panel permits application of various external signals for use in the calibration procedure. The self-contained unit also generates fast-rise pulses for checking risetime and adjusting transient response of the oscilloscope vertical amplifier.

The 067-0521-00 permits checking the regulation limits of the power supplies. In addition, the unit provides a quick check of the oscilloscope alternate sync pulse and chopped blanking circuitry. For oscilloscopes capable of displaying two time-base signals alternately, the 067-0521-00 checks the ability of the alternate-sweep switching circuitry to lock the channels of a dual-trace plug-in unit to the time bases of the oscilloscope.

ELECTRICAL

TEST FUNCTION SWITCH POSITIONS

LOW LOAD, HIGH LOAD

These two switch positions permit the oscilloscope low-voltage power supplies to be loaded from minimum to maximum. External signals applied through the EXT INPUT connector on the front panel of the unit will be ac-coupled to the oscilloscope vertical amplifier to produce a normal display. Maximum vertical sensitivity of the 067-0521-00 oscilloscope combination is about 0.5 volt/cm when the VARIABLE control is set fully clockwise.

GAIN SET

Permits setting the gain of the oscilloscope vertical amplifier with a 100-volt calibrator signal applied to the EXT INPUT connector. The 250-to-1 fixed ratio of this position attenuates the 100-volt signal to 0.4 volt which produces 4 cm of vertical deflection on the crt when the oscilloscope vertical amplifier gain adjustment has been accurately set.

COMMON MODE

Checks common-mode rejection ratio and dc balance of the oscilloscope vertical amplifier.

ALTERNATE

Checks operation of the alternate-mode synchronizing circuits in the oscilloscope. Also permits checking for proper sweep slaving in oscilloscopes having two time bases that can be displayed alternately. Any external signal applied to the EXT INPUT connector is attenuated approximately 1000 times by an internal attenuation network.

CHOPPED

Checks oscilloscope for proper operation in the chopped mode. Free-running rate of the dual-trace switching multivibrator is approximately 100 kc. Any external signal applied to the EXT INPUT connector is attenuated approximately 1000 times by the internal attenuation network.

+PULSE, —PULSE

In these two switch positions, a fast-rise square wave with a risetime considerably less than the vertical deflection system risetime of a Type 546 or Type 547 Oscilloscope is applied to the vertical-deflection system of the oscilloscope being adjusted. The amplitude of either a + or — pulse display can be varied between approximately 2 cm and 6 cm.

Other Controls and Connectors

REPETITION RATE

Three-position switch to select the approximate pulse repetition rate of the Pulse Generator circuit: LOW — 5 kc, MED — 100 kc, HIGH — 600 kc.

AMPLITUDE

Adjusts amplitude of the pulse applied to the oscilloscope vertical amplifier when the TEST FUNCTION switch is set to + PULSE or — PULSE.

VARIABLE

Controls amplitude of the signal applied through the EXT INPUT connector when the TEST FUNCTION switch is set to LOW LOAD or HIGH LOAD. The minimum deflection factor is 0.5 volt/cm with the VARIABLE control set fully clockwise.

VERTICAL POSITION

Controls vertical positioning of the trace or display on the crt in all TEST FUNCTION positions except COMMON MODE.

+225V Pushbutton

Provides +225 volts at the front-panel output banana jack when the pushbutton is pressed.

+225V Banana Jack

Convenient source of +225 volts for checking dc balance of each stage of a distributed vertical amplifier. With the voltage output connected to the cathodes, the stage is effectively cut off when the +225 V pushbutton is pressed.

* A sine-wave bandpass check of the system cannot be made by applying an external high-frequency sine wave through the plug-in test unit.

TEST UNIT
(Part No. 067-0523-00)

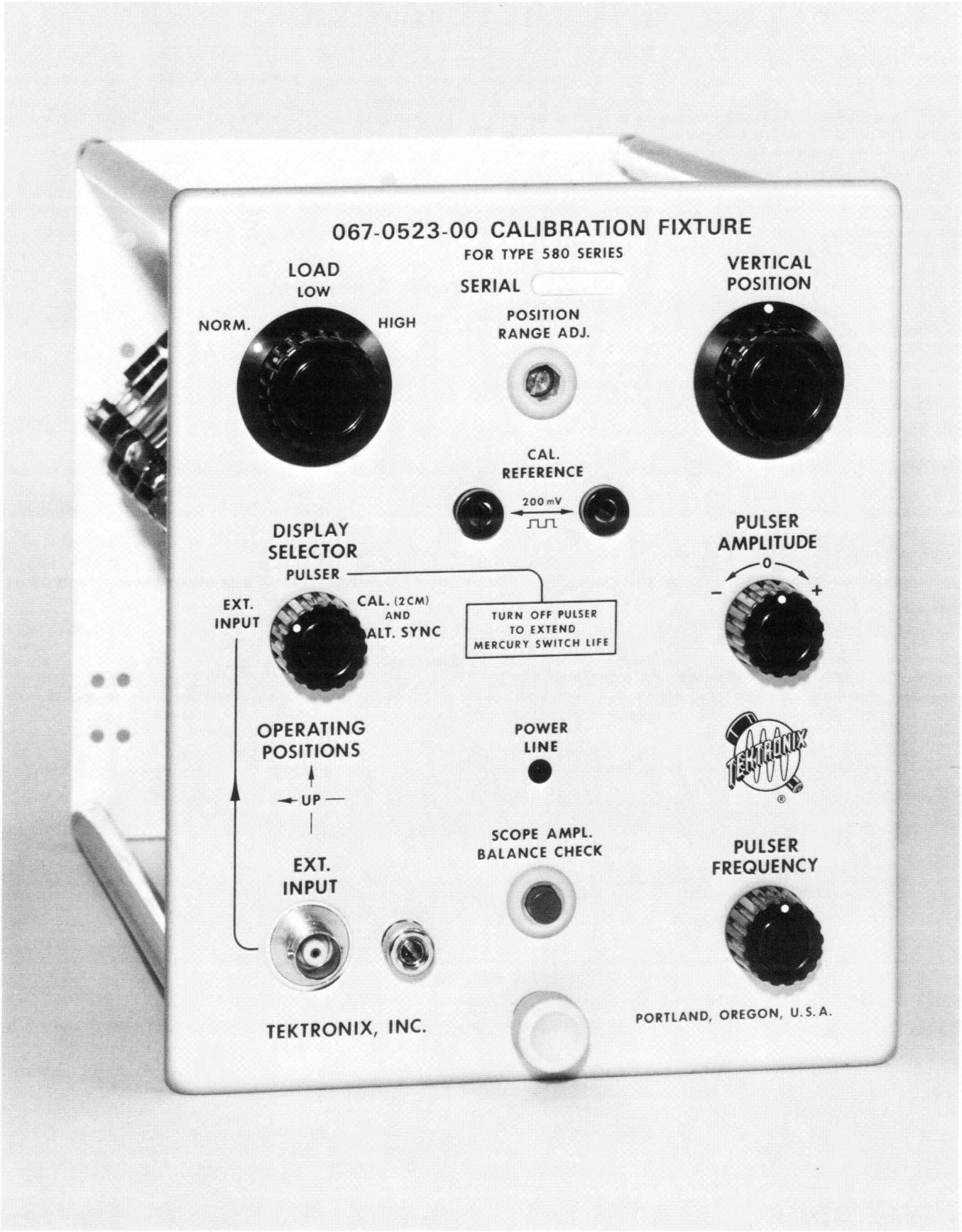

CHARACTERISTICS

General

The Type 067-0523-00 Plug-In Test Unit is a calibration aid for use with Tektronix 580-Series oscilloscopes. The unit provides a reference signal for setting the oscilloscope vertical amplifier gain, a fast-rise voltage step for adjusting oscilloscope vertical amplifier transient response, and a load bank which loads the oscilloscope power supplies over their full current range. The Type 067-0523-00 allows a check of the DC balance of the oscilloscope vertical amplifier. It may also be fed external signals which might be used in calibration procedures.

580-Series oscilloscope vertical amplifiers that have been calibrated with the Type 067-0523-00 have a uniform transient response. The amplitude calibration signal has a long-term amplitude stability. The amplitude signal circuit is driven by the dual-trace alternate sync pulse generated by the oscilloscope. The dual-trace display shows the presence of the sync pulse.

Calibration Reference Signal

A 200-millivolt signal for adjustment of vertical amplifier gain. Signal level is switched by the alternate trace sync pulse from the oscilloscope sweep generator. Signal amplitude can be checked at front-panel jacks.

Pulser

Provides low distortion square-wave pulse with a risetime considerably less than the response time of the vertical amplifier in a 580-Series Oscilloscope. Pulse amplitude continuously adjustable to either plus or minus 4 centimeters deflection. Repetition rate adjustable from about 550 to 750 pulses per second. Pulser maintains risetime without need for circuit adjustment.

Scope Amplifier balance check

Connects input leads to oscilloscope vertical amplifier together. The resultant deflection shows any overall dc imbalance of the scope vertical amplifier.

Power Supply Load

Provides low, normal, and high loading of oscilloscope power supplies. Range corresponds to the range of currents available from power supplies. Allows check of ripple and regulation of each power supply.

Display Selector

A three-position switch which selects the 200 mv calibration signal, pulser, or external input to the oscilloscope.

Power Line Indicator:

Lights when line power is present at pins 12 and 13 of the plug-in interconnecting plug.

Mechanical Construction

Aluminum alloy chassis. Aluminum alloy anodized front panel.

067-0525-00 CALIBRATION FIXTURE

Dual Input Cable, BNC

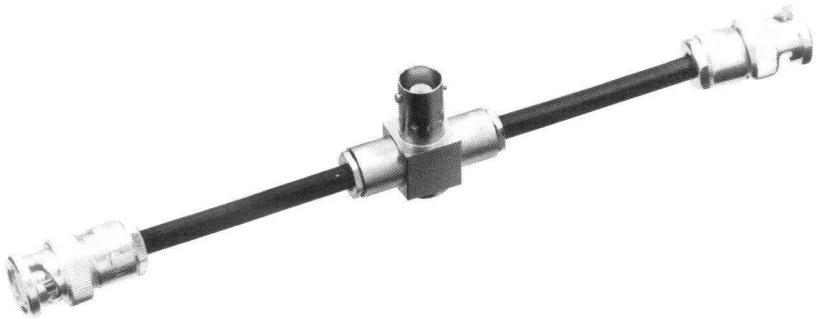

REF. NO.	PART NO.	SERIAL/MODEL NO. EFF.	SERIAL/MODEL NO. DISC.	QTY.	DESCRIPTION
	067-0525-00				The Dual BNC Connector is designed for inserting identical signals into both channels of a dual-channel plug-in unit simultaneously. Common Mode Rejection (CMR) can be conveniently checked with no significant effect from the Dual BNC Connector. The two lengths of RG 58 are matched to less than 0.1".

DATA SHEET NO.

062-0820-00

JANUARY 1967

067-0528-00 CALIBRATION FIXTURE

Test Load Unit

The Type 067-0528-00 provides LO-LOAD equivalent to one Type 122 Amplifier Unit and HI-LOAD equivalent to four Type 122 Amplifier Units, to check 125 Power Supply.

This load unit in conjunction with a ±0.25% or better, nonloading voltmeter and a Tektronix 530/540 Series Oscilloscope with a "D" Plug-In will meet the necessary requirements.*

This unit is not designed to be used on the HI-LOAD position for extended periods, because of insufficient heat dissapation (10 minutes maximum operating time with 30% duty cycle).

*If a nonloading voltmeter of this accuracy (±0.25%) is not available, the LOAD UNIT may be returned to Tektronix, Inc., for certification.

067-0529-00 CALIBRATION FIXTURE

Precision Divider

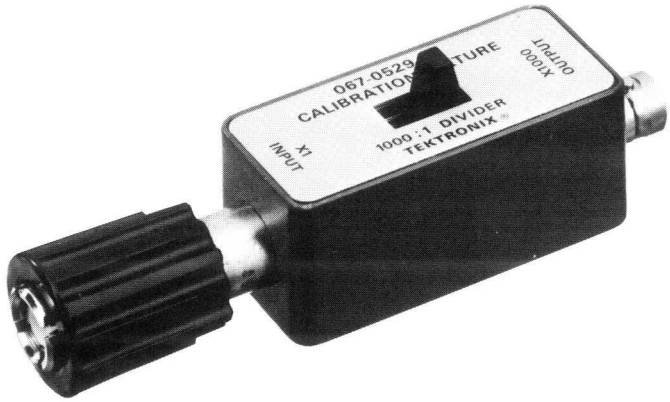

REF. NO.	PART NO.	SERIAL/MODEL NO. EFF.	SERIAL/MODEL NO. DISC.	QTY.	DESCRIPTION
	067-0529-00				A 1000:1 Divider for use with Standard Amplitude Calibrator (067-0502-00) to extend range of output voltage to amounts less than 200 microvolts. Accuracy of divider ±0.2%

DATA SHEET

NO. 062-0821-00

DATE MARCH 1968(R)

067-0530-00 CALIBRATION FIXTURE

3 Pin Adapter Cable

REF. NO.	PART NO.	SERIAL/MODEL NO. EFF.	SERIAL/MODEL NO. DISC.	QTY.	DESCRIPTION
	067-0530-00				An adapter cable for use between BNC source of calibrator signal and input to three-pin Cannon connector, such as used on Type E Plug-in and Type 122 Amplifier.

067-0531-00 CALIBRATION FIXTURE

4 Pin Adapter Cable

REF. NO.	PART NO.	SERIAL/MODEL NO. EFF.	SERIAL/MODEL NO. DISC.	QTY.	DESCRIPTION
	067-0531-00				An adapter cable for use between BNC source of calibrator signal and input to four-pin Cannon connector, such as used on Type 2A61 Plug-in Unit.

067-0532-00 CALIBRATION FIXTURE

Constant Amplitude Signal Generator

The Tektronix Type 067-0532-00 Constant Amplitude Signal Generator produces sinewaves whose amplitude remains constant as the frequency is varied. Output frequency is continuously variable from 65 to 500 MHz. The amplitude of the above mentioned sinewaves is referenced to the amplitude of a 3 MHz sinewave also available at the output connector. Output amplitude is continuously variable from 0.5 volt to 2.5 volts peak to peak into 50 ohms. The output amplitude is in 0.5 volt steps from 0.5 to 5.0 volts into 50 Ω. It is also continuously variable from 0.5 volts to 5.5 volts. The output remains constant amplitude from 0.5 volts to 5.5 volts from 65 MHz to 300 MHz, and constant amplitude from 0.5 volts to 2.5 volts from 300 MHz to 500 MHz. Cable loss and standing wave errors are essentially eliminated. The amplitude is regulated at the generator end of a 50 ohm resistor physically adjacent to the output connector. The output connector, 50 ohm resistor, and amplitude detector are at the end of an attached 42 inch cable.

CHARACTERISTICS

OUTPUT

CHARACTERISTIC	PERFORMANCE REQUIREMENT	SUPPLEMENTAL INFORMATION
FREQUENCY ACCURACY	Within ±2% of reading	Into a 50 Ω 1% load
AMPLITUDE ACCURACY	With ±3% of indicated amplitude	Into a 50 Ω 1% load
AMPLITUDE REGULATION	Within ±2% of 3 MHz amplitude from 65 to 300 MHz and 0.5 to 5.5 volts P-P output. Within ±5% of 3 MHz amplitude from 300 to 500 MHz and 0.5 to 2.5 volts P-P output.	Into a 50 Ω 1% load
HARMONIC CONTENT		Typically less than 2%

POWER REQUIREMENTS

CHARACTERISTIC	PERFORMANCE REQUIREMENT	SUPPLEMENTAL INFORMATION
LINE VOLTAGES	105 VAC, 115 VAC, 125 VAC 210 VAC, 230 VAC, 250 VAC	Center values available by rear panel switch and transformer wiring
FUSES	Type 3AG 0.4 amperes slo blo Type 3AG 0.2 amperes slo blo	115 VAC operation 230 VAC operation
LINE FREQUENCY	50 to 400 Hz	
POWER CONSUMPTION		Approximately 25 watts

MECHANICAL

CHARACTERISTIC	INFORMATION
CONSTRUCTION	Aluminum alloy chassis, panel and cabinet Glass laminated circuit boards Output through a GR Type 874 connector at the end of a 42 inch cable

OSCILLOSCOPE INPUT NORMALIZERS

Input Normalizers are used for checking or adjusting the input capacitance of oscilloscopes, or oscilloscope plug-in units, where high-impedance attenuator probes may be used. In a sense they are dummy probes. Input capacitance should be adjusted for each setting of the input attenuator switch, so that you will not need to readjust an input probe each time the attenuator setting is changed.

Different oscilloscope types have different nominal values of input capacitance, so require different input normalizers. The Instruction Manual for each Tektronix Oscilloscope identifies which normalizer should be used, if any, and how to use it.

An instruction manual may refer to an Input Normalizer as a Capacitance Standardizer, a Time Constant Standardizer, or as an RC Standardizer. The name was changed to Normalizer to reduce confusion about whether they should be considered a measurement Standard. The Tektronix part number was changed at the same time.

Input Normalizers are not intended to be used to determine whether input capacitance is within certain limits, or whether the RC product of input resistance and input capacitance is within certain limits. Therefore, they are not intended to be measurement Standards. Furthermore, it is not advisable to attempt to maintain the input capacitance or the input RC time constant on different scopes to tight tolerances with the hope of obviating the need to check or adjust a probe when it is used with a different oscilloscope. Proper probe adjustment should always be checked each time a probe is connected to a different oscilloscope or plug-in unit. When this practice is observed, fewer measurement errors will be made than can be prevented by a rigorous program to maintain specific tolerance limits. Nor is it advisable to rely on a known input capacitance, measured at one frequency, to calculate the input loading effects on a signal having a different frequency.

Most Tektronix Input Normalizers never need to be adjusted after they leave the factory. Performance is tested each time one is used, and normally should be considered adequate as long as the adjustable input capacitors in the oscilloscopes have sufficient range.

If readjustment should be necessary, the internal resistor should first be measured to be sure it is in tolerance. Then the internal variable capacitor may be adjusted to produce a square-cornered flat-topped response to a square-wave signal on an oscilloscope it is designed to be used with, in the same way as described in the instructions for adjusting scope input capacitance. The response of the scope to square waves should first be known to be normal, and the input capacitance to the scope should be known to be within about five per cent of its nominal value at the attenuator setting used. It is normal for input capacitance to vary slightly from one setting to the next to correspond with slight variations of input resistance. A Tektronix Type 130 L-C Meter may be used to measure the scope input capacitance. Measurement should be made while the scope is operating. When using the Type 130, to avoid a small possibility of a measurement error due to overdriving the input, it is a good idea to use an attenuator setting that corresponds to a deflection factor of about 1 volt per division.

067-0533-00 CALIBRATION FIXTURE

Input Normalizer 20 pF (UHF)

REF. NO.	PART NO.	SERIAL/MODEL NO. EFF.	SERIAL/MODEL NO. DISC.	QTY.	DESCRIPTION
	067-0533-00				An Input RC Time Constant Normalizer for signal inputs having nominal 1 megohm x 20 pF input RC time constant and having UHF connectors.

DATA SHEET NO.

062-0839-00

APRIL 1967

067-0534-00 CALIBRATION FIXTURE

Input Normalizer 24 pF (UHF)

REF. NO.	PART NO.	SERIAL/MODEL NO. EFF.	SERIAL/MODEL NO. DISC.	QTY.	DESCRIPTION
	067-0534-00				An Input RC Time Constant Normalizer for signal inputs having nominal 1 megohm x 24 pF input RC time constant and having UHF connectors.

DATA SHEET NO.

062-0840-00

APRIL 1967

067-0535-00 CALIBRATION FIXTURE

Input Normalizer 47 pF (UHF)

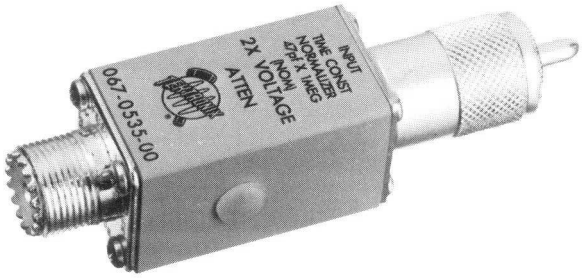

REF. NO.	PART NO.	SERIAL/MODEL NO. EFF.	SERIAL/MODEL NO. DISC.	QTY.	DESCRIPTION
	067-0535-00				An Input RC time Constant Normalizer for signal inputs having nominal 1 megohm x 47 pF input RC time constant and having UHF connectors.

DATA SHEET NO.

062-0841-00
APRIL 1967

067-0536-00 CALIBRATION FIXTURE

Input Normalizer 12 pF (BNC)

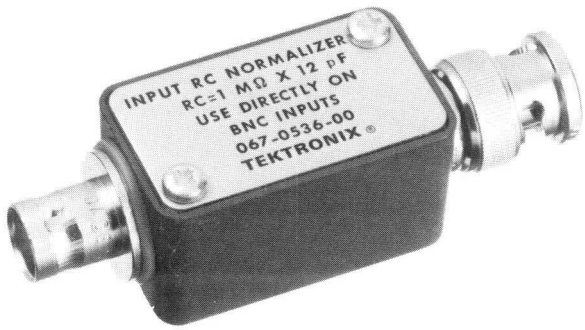

REF. NO.	PART NO.	SERIAL/MODEL NO. EFF.	SERIAL/MODEL NO. DISC.	QTY.	DESCRIPTION
	067-0536-00				An Input RC Time Constant Normalizer for signal inputs having nominal 1 megohm x 12 pF input RC Time constant and having BNC connectors.

DATA SHEET NO.
062-0833-00
APRIL 1967

067-0537-00 CALIBRATION FIXTURE

Input Normalizer 15 pF (BNC)

REF. NO.	PART NO.	SERIAL/MODEL NO. EFF.	SERIAL/MODEL NO. DISC.	QTY.	DESCRIPTION
	067-0537-00				An Input RC Time Constant Normalizer for signal inputs having nominal 1 megohm x 15 pF input RC time constant and having BNC connectors.

DATA SHEET NO.
062-0834-00
APRIL 1967

067-0538-00 CALIBRATION FIXTURE

Input Normalizer 20 pF (BNC)

REF. NO.	PART NO.	SERIAL/MODEL NO. EFF.	SERIAL/MODEL NO. DISC.	QTY.	DESCRIPTION
	067-0538-00				An input RC Time Constant Normalizer for signal inputs having a nominal 1 megohm x 20 pF input RC time constant and having BNC connectors.

DATA SHEET NO.
062-0835-00
APRIL 1967

067-0539-00 CALIBRATION FIXTURE

Input Normalizer 24 pF (BNC)

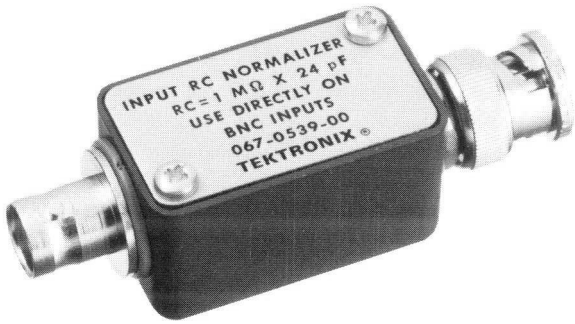

REF. NO.	PART NO.	SERIAL/MODEL NO. EFF.	SERIAL/MODEL NO. DISC.	QTY.	DESCRIPTION
	067-0539-00				An Input Time Constant Normalizer for signal inputs having a nominal 1 megohm x 24 pF RC time constant and having BNC connectors.

DATA SHEET NO.
062-0836-00
APRIL 1967

067-0540-00 CALIBRATION FIXTURE

Input Normalizer RC = 1 MEG × 33 pF

REF. NO.	PART NO.	SERIAL/MODEL NO. EFF.	SERIAL/MODEL NO. DISC.	QTY.	DESCRIPTION
	067-0540-00				This 33 pF Input Normalizer is a calibration aid that is used for checking or adjusting the input capacitance of oscilloscopes, or oscilloscope plug-in units, where high impedance attenuator probes may be used.

067-0541-00 CALIBRATION FIXTURE

Input Normalizer 47 pF (BNC)

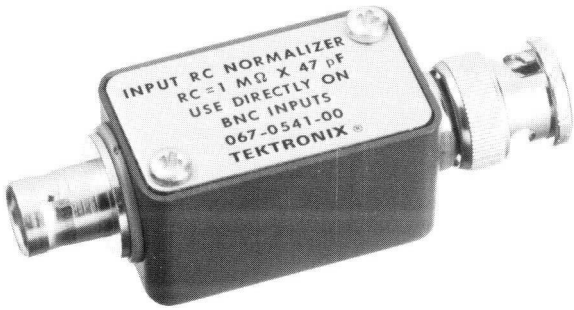

REF. NO.	PART NO.	SERIAL/MODEL NO. EFF.	SERIAL/MODEL NO. DISC.	QTY.	DESCRIPTION
	067-0541-00				An Input Time Constant Normalizer for signal inputs having a nominal 1 megohm x 47 pF input RC time constant and having BNC connectors.

DATA SHEET NO.
062-0837-00
APRIL 1967

067-0544-00 CALIBRATION FIXTURE

TEST LOAD UNIT

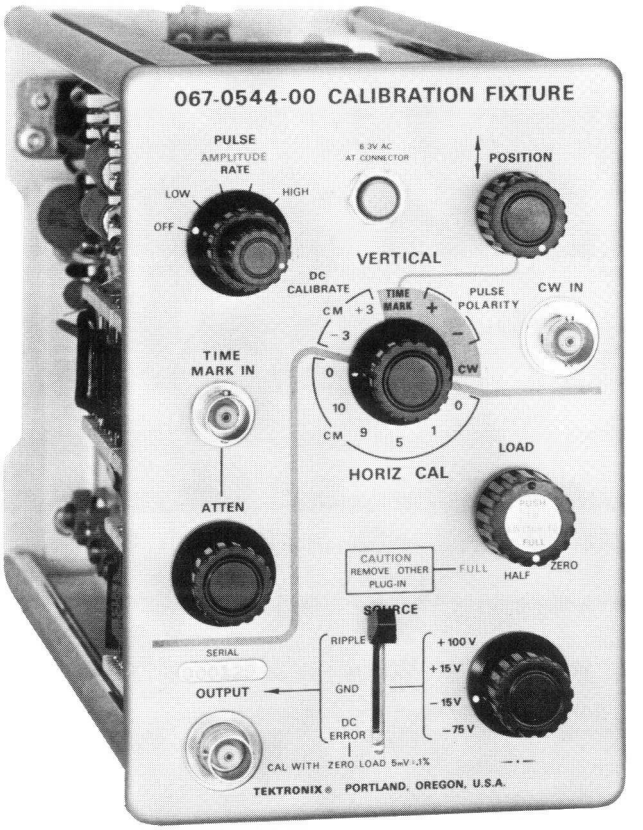

The 067-0544-00 Test Unit is a calibration aid for the Type 647A or Type RM647A Oscilloscope. The unit is designed to calibrate and standardize both the vertical and horizontal circuitry of the Type 647A. The 067-0544-00 aids in setting the oscilloscope: (1) power supply voltages, (2) horizontal amplifier gain, (3) vertical amplifier gain, and (4) vertical amplifier transient response and bandwidth. The 067-0544-00 aids in checking: (1) regulation of the power supplies at the different load conditions, and (2) power supply ripple. In addition, an external time-mark signal may be applied to the 067-0544-00 for calibrating or checking the sweep rates of the time-base unit used with the Type 647A.

067-0549-00 CALIBRATION FIXTURE

Type 410 Input Adapter

REF. NO.	PART NO.	SERIAL/MODEL NO. EFF.	SERIAL/MODEL NO. DISC.	QTY.	DESCRIPTION
	067-0549-00				When used in conjunction with standard electronic signal generators, the Input Adapter for the Type 410 makes it easily possible to apply all input signals required to check the electrical performance of the Type 410 Physiological Monitor. The Input Adapter contains various switches, networks and connectors to conveniently test such characteristics as triggering, vertical size calibration, common mode rejection, AUX power voltage, and to adapt to all combinations of input connections. The construction of the Input Adapter is such that all input wiring is guarded by applying the "bootstrap" signal from the Type 410 to cable shields and to an inner case. Thus, tests of Common Mode Rejection are performed in the same environment as recommended usage of the Type 410 dictates.

DATA SHEET

NO. 062-0933-00

DATE APRIL 1968

067-0552-00 CALIBRATION FIXTURE

Input Normalizer 30 pF (BNC)

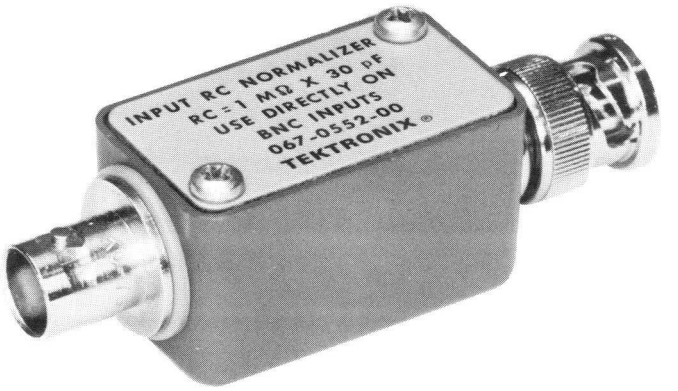

REF. NO.	PART NO.	SERIAL/MODEL NO. EFF.	SERIAL/MODEL NO. DISC.	QTY.	DESCRIPTION
	067-0552-00				An Input RC Time Constant Normalizer for signal inputs having nominal 1 megohm x 30 pF input RC time constant and having BNC connectors.

DATA SHEET NO.
062-0859-00
May 1967

067-0553-00 CALIBRATION FIXTURE

Signal Insertion Unit

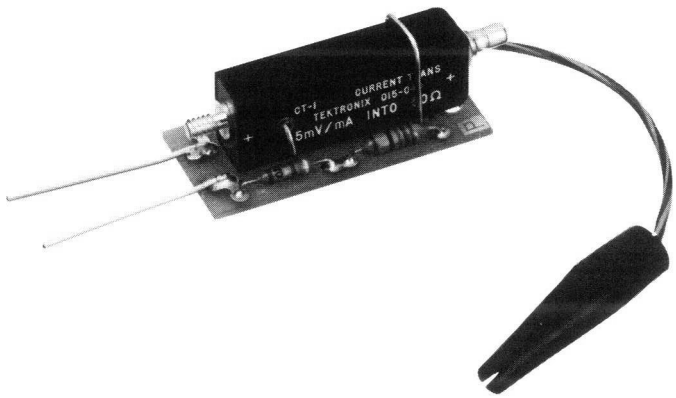

REF. NO.	PART NO.	SERIAL/MODEL NO. EFF.	SERIAL/MODEL NO. DISC.	QTY.	DESCRIPTION
	067-0553-00				An insertion unit for use in the Type 454 Oscilloscope. This enables the Calibrator to insert a fast ns signal between the preamplifier and the delay line. Making possible the adjustment of the main amplifier before the preamp is adjusted. A P6040 Probe (010-0133-00) is also necessary as a means of applying a signal to the insertion unit.

DATA SHEET NO.

062-0868-00
June 1967

ELECTRICAL PARTS LIST—067-0553-00

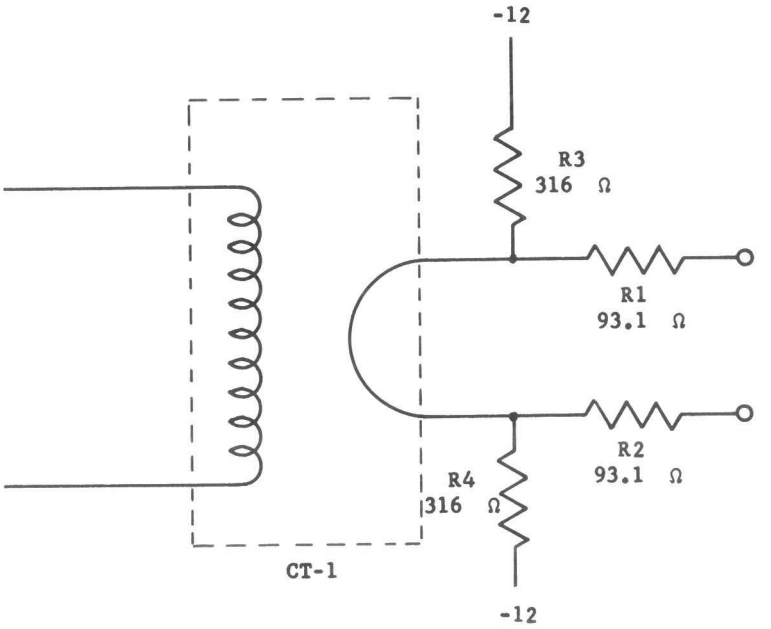

Values are fixed unless marked Variable.

Ckt. No.	Tektronix Part No.	Serial/Model No. Eff	Disc	Description		
			Resistors			
R1	321-0094-00		93.1 Ω	1/8 W	Prec	1%
R2	321-0094-00		93.1 Ω	1/8 W	Prec	1%
R3	322-0145-00		316 Ω	1/4 W	Prec	1%
R4	322-0145-00		316 Ω	1/4 W	Prec	1%

067-0559-00 CALIBRATION FIXTURE

P6019/P6042 High Frequency Current Test Fixture

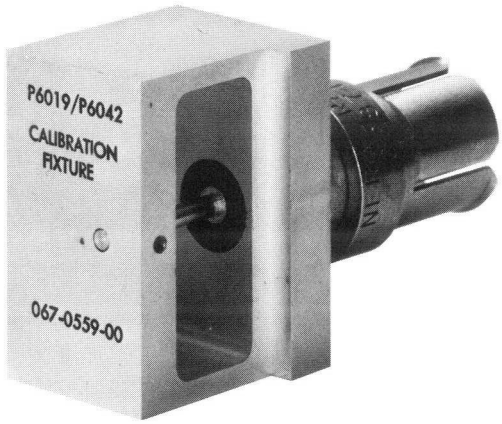

REF. NO.	PART NO.	SERIAL/MODEL NO. EFF.	SERIAL/MODEL NO. DISC.	QTY.	DESCRIPTION
					This High Frequency Current Test Fixture is a 50 Ω termination and current source for calibration of the P6019/P6042 Current Probes. This device is connected to a 50 Ω generator (109, 106) to terminate it in 50 Ω. The current loop is in series with the termination on the grounded side.

DATA SHEET

NO. 062-0909-00

DATE APRIL 1968(R)

067-0562-00 CALIBRATION FIXTURE

P6046 Input Adapter

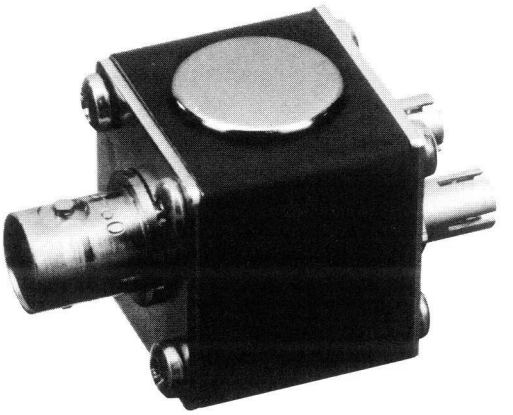

REF. NO.	PART NO.	SERIAL/MODEL NO. EFF.	SERIAL/MODEL NO. DISC.	QTY.	DESCRIPTION
					The 067-0562-00 P6046 Input Adapter is a device which connects the P6046 dual input tips together to the center conductor of a BNC connector. Mechanically, the electrical length of both inputs is made equal. This achieves high-frequency signal cancellation during the 50 MHz 1000:1 common mode rejection calibration adjustments.

DATA SHEET

NO. 062-0925-00

DATE APRIL 1968(R)

067-0563-00 CALIBRATION FIXTURE

P6046 Calibration Shield

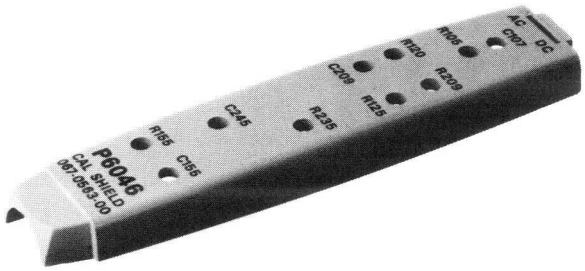

REF. NO.	PART NO.	SERIAL/MODEL NO. EFF.	SERIAL/MODEL NO. DISC.	QTY.	DESCRIPTION
					The 067-0563-00 P6046 Calibration Shield is a P6046 cover with perforations to reach the calibration adjustments. The cover aids in simulating the total enclosure of the original cover while setting the high frequency adjustments.

DATA SHEET

NO. 062-0926-00

DATE MARCH 1968

067-0565-00 CALIBRATION FIXTURE

Ramp and Sine Wave Adder

REF. NO.	PART NO.	SERIAL/MODEL NO. EFF.	SERIAL/MODEL NO. DISC.	QTY.	DESCRIPTION
	067-0565-00				The 067-0565-00 Calibration Fixture, Ramp and Sine Wave Adder is designed to calibrate the 520 NTSC and 520 PAL Vectorscopes for differential gain and differential phase error. It also provides a 5% attenuator for checking gain accuracy of the vectorscopes in the Differential Gain Mode. Sine Wave Input: Requires 2 volts of CW from sub-carrier output of 067-0546-00 at either 3.579545 or 4.433619 MHz. Ramp Input: Requires 100 V to 150 V ramp with a period of 65 μs such as sweep output from 547 to 556. Added Output: Ramp output adjustable from 0.7 to 1.4 volts and sine wave component adjustable from 70 mV to 200 mV into a 75 Ω load. Five percent attenuation of both components provided in 95% mode. **DATA SHEET** NO. 062-0932-00 DATE APRIL 1968

067-0573-00 CALIBRATION FIXTURE

Type 611 Calibration Graticule

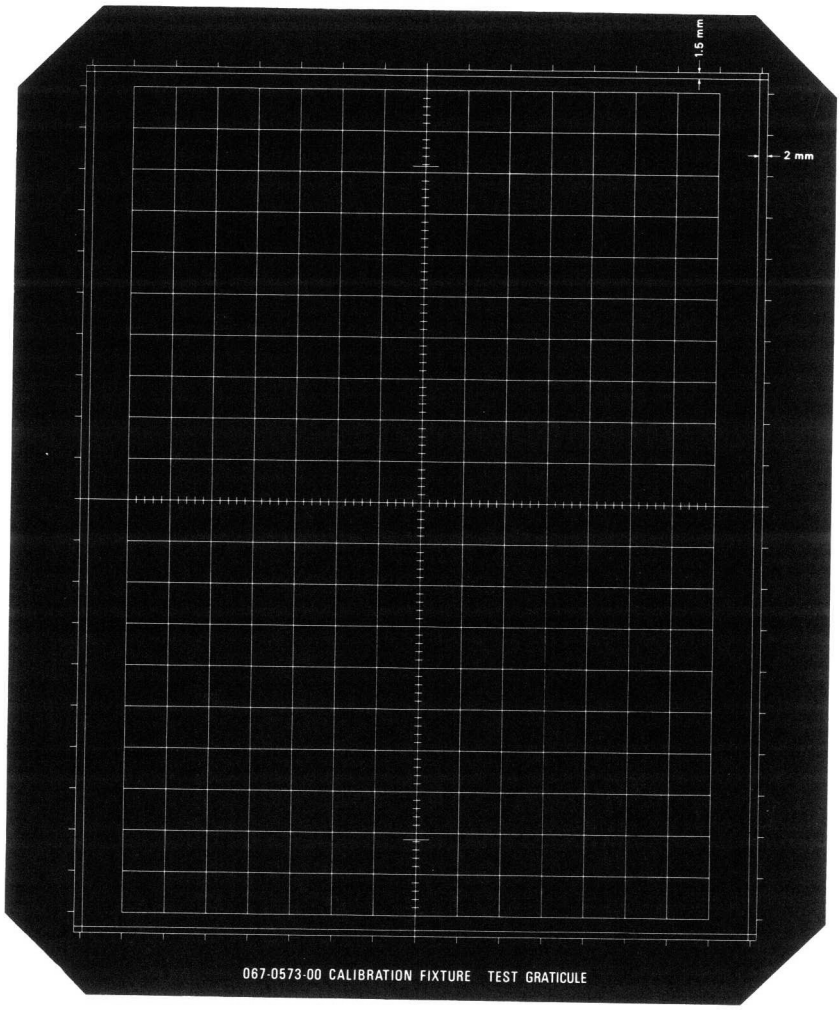

REF. NO.	PART NO.	SERIAL/MODEL NO. EFF.	SERIAL/MODEL NO. DISC.	QTY.	DESCRIPTION
					The 067-0573-00 Calibration Fixture Graticule, is a graticule for calibration of the Type 611 Storage Monitor. Its lines and grids define the perimeter of the quality area, the display center, and assist in calibrating the yoke alignment, gain, linearity and settling time.

DATA SHEET

NO. 062-0937-00

DATE APRIL 1968

NOTES