SEMICONDUCTORS

COMMON DESIGN PARTS CATALOG

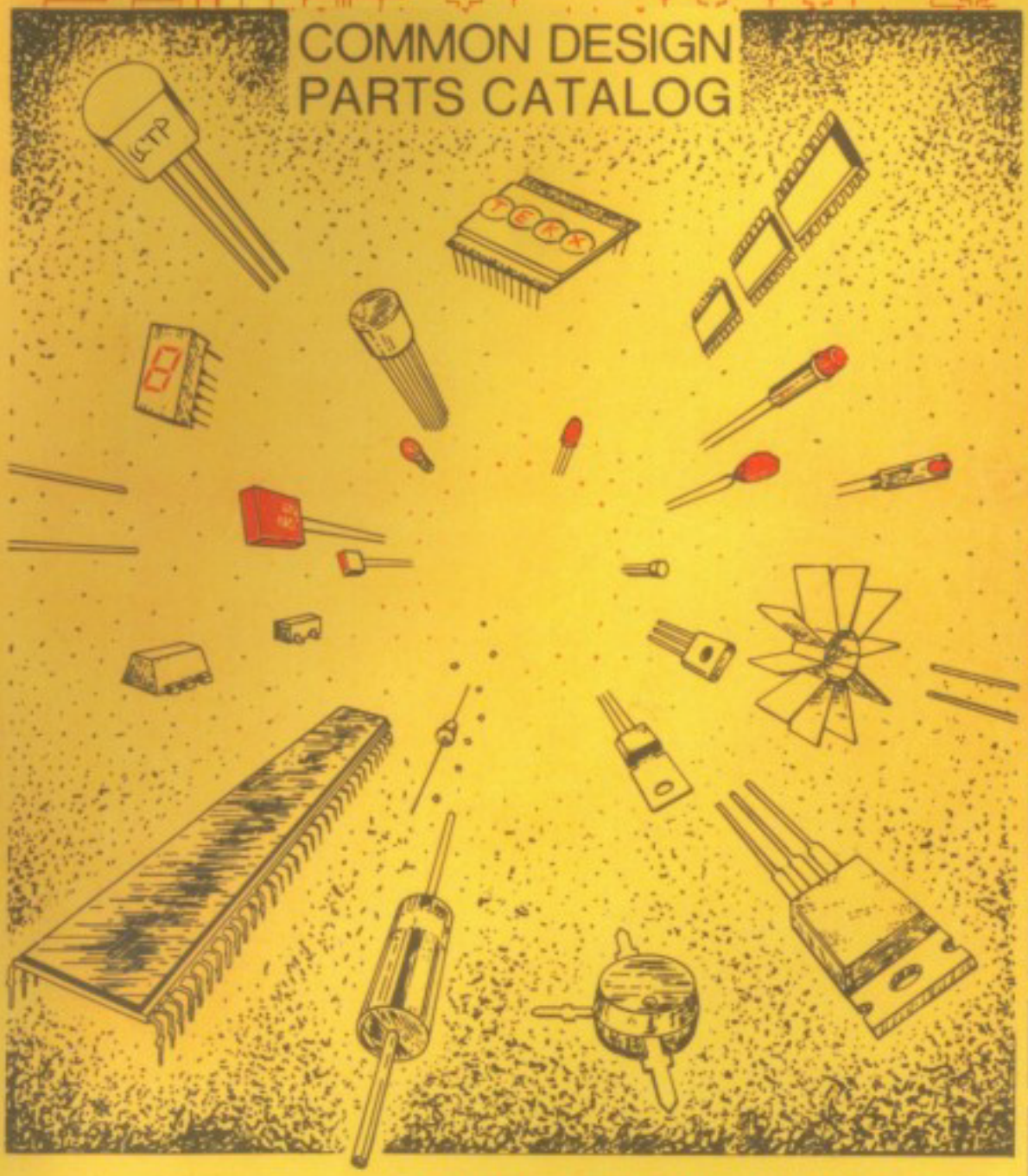

OCTOBER 1982

PUBLISHED BY
PARTS CATALOGING GROUP
(78-567 ext 2591 DR)

Tektronix
COMMITTED TO EXCELLENCE

CKT BD DOLLY LIST
LOGO LIST
SAFETY & RELIABLTY
TEK PN SYSTEM — 0

DIGITAL IC's
MEMORIES, MOS,
CMOS, ECL, TTL
MICROPROCESSOR — 1

SPECIAL FUNCTION IC's
(DIGITAL / LINEAR) — 2

ARRAYS
LINEAR IC's (PURCH)
TEK-MADE IC's — 3

IC's
INDEX (COLORED PGS)
INCL: PRGMD, SCRND, ETC
IC APPLICATION NOTES — 4

HEAT SINKS
INSULATORS — 5

TRANSISTORS
POWER
SMALL SIGNAL
ARRAYS — 6

TRANSISTORS
FET — 7

TRANSISTORS
SCR & SWITCHES
TRIAC & UNIJUNCTION
MATCHED & CHECKED — 8

TRANSISTORS
INDEX (COLORED PGS)
DRAWINGS
APPLICATION NOTES — 9

DIODES
BACK&FOUR LAYER
TUNNEL, SNAP-OFF
VVC, ARRAYS — 10

DIODES
ZENER
CURRENT LIMITING — 11

DIODES
RECT, SIG, SWITCH
TEK SCHOTTKY
MATCHED CHECKED — 12

DIODES
INDEX (COLORED PGS)
DRAWINGS
APPLICATION NOTES — 13

OPTOELECTRONICS — 14

LAMPS
LENSES
LAMPHOLDERS — 15

☞ COMPANY CONFIDENTIAL

THE CONTENTS OF THIS CATALOG ARE FOR THE EXCLUSIVE USE OF TEKTRONIX EMPLOYEES. ANY UNAUTHORIZED USE MAY CONSTITUTE A THEFT.

PURPOSE AND USE

This catalog is not intended to be a specification document by including all characteristics of the parts listed. It is a catalog with parts arranged in an order determined by the prime characteristic.

Parts not listed herein are either not to be used in new design or are so new that their characteristics may yet be changed. We suggest you call the appropriate Component Engineer and/or check the component specification for complete details on any part before making a decision on its use. Specifications can be obtained from Reprographics 58-038, ext. 1658, or viewed at any of the satellite aperture card locations.

CORRECTIONS & SUGGESTIONS

Corrections or suggestions are encouraged at any time. Call ext. 2585 or mail to delivery station 78-567. Special forms for this purpose are also included at the front of the catalog.

UPDATES AND NOTES

We have included pages throughout the catalog entitled UPDATES AND NOTES for your use.

HOW TO ORDER CATALOGS

Call ext. 2591 or write to Parts Cataloging, 78-567. We will need your name, payroll code, delivery station and responsibility-cost center.

USING CATALOGS FOR PARTS REPLACEMENT

No effort has been made to correlate the parts in this catalog with those parts which are available for replacement in the field. Some of the parts listed herein are not available for use as replacement parts. Ordering such parts will only slow your order and impede the general efficiency of the parts ordering process. All replacement parts are listed in the NPR (Numerical Parts Record).

COST CODE

(CC COLUMN)

CODE	≈ VALUE with -	≈ VALUE no suffix	≈ VALUE with +
A	.2¢	.5¢	.75¢
B	1.25¢	1.5¢	2¢
C	2.5¢	3¢	3.75¢
D	4.25¢	5¢	6¢
E	7¢	8¢	10¢
F	13¢	15¢	18¢
G	22¢	25¢	35¢
H	40¢	50¢	60¢
I	65¢	75¢	$1
J	$1.25	$1.50	$2
K	$2.50	$3	$3.75
L	$4.25	$5	$6
M	$7	$8	$10
N	$13	$15	$18
O	$22	$25	$35+

NOTE: Costs may vary from order to order due to order quantities, vendor, etc.

NEW FEATURES IN THIS CATALOG

MICROCIRCUIT COVER LIDS - SECTION 3.
TEK ALUMINA INSULATORS & HEAT SINKS (WASHERS, TUBES & RODS) - SECTION 5.

CATALOG DISTRIBUTION NOT AUTOMATIC

We have special routing lists to announce new catalogs. A response to those notices is necessary each time to receive the next edition of a catalog. Call Ext. 2591 to have your name added to the mailing list.

SEND OUTDATED CATALOGS TO SALVAGE, 02-001.

PARTS INFORMATION (WHERE TO LOCATE - HOW TO DO)

- BILL OF MATERIALS - Component Item Sequence Report (#400-02) - 55-139, Ext. 3584
- BUYER INFORMATION:
  1. For a given part number - Use IMS - IMINQRT2.
  2. General reference - See inside back cover or call Ext. 2727.
- CENTRAL STORES PARTS - 71-555, Ext. 4182.
- COMPONENT ENGINEER for a part is? - See Pages 0-46 thru 0-57.
- COMPONENT INFORMATION SYSTEM (CIS) - Available on CYBER B Machine.
  1. On-line queries and data entry of purchased component information.
  2. Printed reports of purchased component information.
  3. Call CISDG at Ext's. 2520, 2583 or 2587 for more information.
- COMPONENT NEWS (publication) - 58-122, Ext. 1762 for copies.
- COMPONENT RELIABILITY - 58-061, Ext. 1605.
- CORPORATE RELIABILITY INFORMATION SERVICES - 53-114, Ext. 8004-MR.
  1. Component field and plant failure rates.
  2. Product failure experience.
  3. Reliability on-line information system.
  4. Component field failure reports.
- COST:
  1. Of a part - 55-640, Ext. 3246.
  2. Of an instrument - 55-640, Ext. 3246.
  3. How a cost was arrived at - 55-640, Ext. 3246.
- DESCRIPTION OF A PART - (In Item Master), Ext. 2220.
- ENVIRONMENTAL TEST LAB (I.D.) - 50-132, Ext. 4788.
- ENVIRONMENTAL TEST LAB (I.D.D.) - 63-076, Ext. 3987-W.
- NETTING REPORT (requirements) - Ext. 3268
- NPR - (Numerical Parts Record) - Parts Research, 73-848, Ext. 2156.
- PARTS RESEARCH - (Customer Service) - 73-848, Ext. 2156.
- PPL - (Parts Price List) - Parts Research, 73-275, Ext. 1951.
- PPRL - (Parts Price & Replacement List) - Parts Research, 73-275, Ext. 1951.
- RESERVES on a part - Ext. 3268.
- SALVAGE: (Further questions call Ext. 4241.)
  1. Paper and old catalogs - Send to 02-001.
  2. Chemicals with precious metals - 10-000.
  3. Precious metals bearing scrap - 68-000.
     (There is a precious metals transfer form available - #000-8855-00)
- SOURCES on a purchased part:
  1. PISL (Purchased Item Source List) - Attached to each part specification.
  2. PISL on-line on the Component Information System on CYBER B Machine (See CIS above). Users manual for CIS is available from 78-584.
  3. Buyer - See inside back cover or call Ext. 2741.
- SPECIFICATION DOCUMENT for a part:
  1. Aperature card file and viewer-printer.
     a. Reprographics, 58-038, Ext. 1658 (generally same day service, 24 hours).
     b. Buildings 19, 39, 50, 63, 78 and 92.
  2. Aperature card file and viewer only:
     a. Buildings 02, 19, 51, 53, 55, 58, 60, 70, 73 and 94.
- STATUS of a part - IMS - IMINQRT2
- To order A NEW PURCHASED PART:
  1. For trial use: Special purchase requisition (Form #000-1165-00).
  2. For permanent use: PPIF (Form #000-1704-00) to 78-584.
- To order PARTS FROM STOCK - Refer to Materials Ordering & Planning Process Manual
- To order PRINTED FORMS - Use Requisition Review Log Sheets (Form #000-5930-00) and send it to 70-697, Ext. 4166.
- To order TEK INSTRUMENT MANUALS:
  1. From the field - Use TEKNET.
  2. Internal - Use Requisition Review Log Sheet and process it like a part order. (NOTE: Manuals cannot be orderd by instrument number; to get manual numbers, call Ext. 2208.)
- To order TEK PRODUCT CATALOGS - 76-131, Ext. 2248.
- To order THESE CATALOGS - 78-567, Ext. 2591. Include your name, payroll code, delivery station, ext. and responsibility cost center.
- To order UNNUMBERED PARTS SAMPLES - Special purch. req. to engineering buyer.

UNNUMBERED PARTS AND WHO HAS THEM - Check with engineering buyer or component evaluation engineer.

- VENDOR COMPONENT CATALOGS (NOW IN DIVISIONS)

COM DIV	627-1336	ID	627-2858	DAD	629-1452
COM DIV	627-1369	IDD	685-3966	TECH	627-6017

- WHERE A PART IS USED (Instrument or Kit):
  1. 78-608, Ext. 2200
  2. Use Bill of Materials (Component Item Sequence portion.
  3. First used on: Ext. 2220.

Copyright ©1982 by Tektronix, Inc., Beaverton, Oregon. Printed in the United States of America. All rights are reserved. Contents of this publication may not be reproduced in any form without permission of Tektronix, Inc.

PURCHASED PART INITIATION FORM

The PPIF is shown below. The form was revised to add spaces for safety requirements, and space to list second source. Please salvage the old forms and order new ones from the warehouse (P/N 000-1704-00).

ORIGINATOR - Fill as completely as possible. Attach two copies of manufacturer's data sheet or two Tek drawings. In the event of a mod, a copy of the mod proposal. Send all six copies of the PPIF and attachments to Documentation Coordination, 78-584.

C.E. - Documentation Coordinator (Ext. 2586 & 2578) will assign parts coordination number for tracking. C.E. Engineer will complete this section.

BASE DATA MANAGEMENT DEPT. - Assigns Tek part number and description.

FIRST PARTS DISTRIBUTION - Used to reserve stock for mod. If a new part in new instrument, Engineering Stock parts may be set up.

PURCHASING - Completed at time of initial purchase order.

PURCHASED PART INITIATION FORM FOR TEK PN

Directions: Use typewriter or ball point pen. Press firmly to mark all copies.

ORIGINATOR

(Date) (Engineer) (Phone) (del sta) | (Date) (Project Engineer) (Phone) | DATE NEEDED not for A & B phase

(Date) (Prototype Support Technician) (Phone) (del sta) (Date) MOD Coordinator (Phone) (del sta)

DESCRIBE PART NEEDED, ATTACH 2 COPIES OF UPDATED MFG DATA SHEET OR TEK DWG.

ITEM NAME

DESCRIPTION:

Safety Controlled Component Yes ____ No ____ BUYER CONTACT ____

Standard Mfg. Catalog Part Yes ____ No ____ Tek Drawing or Data Sheet Yes ____ No ____ Part has Tek Supplied Subparts Yes ____ No ____ IF YES, ATTACH TEK SUPPLIED PARTS LIST

MANUFACTURER MFGR'S P/N:

MANUFACTURER MFGR'S P/N:

PROJECT/MOD NO.	INSTRUMENT	QTY/INSTR	INSTR PER 1ST YEAR

COMPONENT EVALUATION

COMMENTS: DESCRIPTION:

SUPPLIER NAME AND PART NUMBER	INITIAL COST EST.	SOURCE RATING†

†A=approved N=not approved Q=qualifying E=emergency

This part (has) (has not) been evaluated Part for Spec. Required

Anticipated Buyer No. ____ Engr Stock Yes ____ No ____ Yes ____ No ____

(Date) (Component Evaluation Engineer) (Phone) (del sta) Parts Coordinator No.

BASE DATA MGT DEPT

ITEM MASTER NAME:

DESCRIPTION:

TEK PN

FIRST PARTS DISTRIBUTION

NAME	DEL STA	WHEN NEEDED		ACCOUNT NUMBER	QUANTITY

TOTAL ORDER QUANTITY ____

PURCH

DATE DUE ____ STOCK UNIT ____ ORDER NO.

MATERIAL CLASS ____ INITIAL COST ESTIMATE

(Date) (Buyer) (No) (Phone) Lead Time ____ (in working days)

000-1704-00 Revised April 1980

Tektronix, Inc.

1.White-Purchasing
2.Green-Component Specifications
3.Canary-Component Evaluation Engr
4.Goldenrod-Prototype Support Tech
5.White-Purchasing
6.Pink-Engineer

WHAT IS THE COMPONENT INFORMATION SYSTEM?

The Component Information System (CIS) is a computerized database system which acts as a centralized source of information on purchased components. CIS contains the following types of services: on-line data entry by the originators of the data, on-line queries by any CYBER B computer user using a user-friendly interactive program, and standard and customized reports on lists of parts supplied by the user. The database currently contains information on 59,000 purchased and 7,000 Tek-manufactured components. Most of the information contained in the system is related to "fitness for use". CIS now contains information on purchased part descriptions, buyers, costs, controlling documents, official sources for parts, Component Engineering and Reliability Engineering comments on purchased parts, Product Safety generated information about safety-controlled parts, and parametric information (only for memories at this time). CIS currently contains information on purchased part documentation (currently existing in Dorothy Smith's Documentation Coordination System).

EIA DATE CODE

EIA DATE CODE

What and why:

The production lot date of many, if not most, of our purchased electrical parts are identified by using the EIA date code system. In other words, the EIA date code is used to identify the date of production for a part.

How does the date code work?

The last two digits of the production year plus the number of the week of that year are used. A hypothetical example of the use of the EIA date code would be: two digits for the year - such as "82" and another two digits for the week of the year. Thus, the date code might be: 8206 which would represent "82" for 1982, the production year, and "06" for the week of February 4-10, the production week. (The first week of the year is that calendar week in which the first Thursday falls.)

If a component manufacturer is unable to use the four-digit date code, an alternate three-digit code may be used by taking only the last digit of the year. The above example would then become: 206.

User Feedback

We want this to be the FINEST - MOST USEFUL printing you have ever seen. If we have slipped-up and you feel there is room for improvement, please tell us at once. You will be doing us a great favor if you call a problem to our attention.

Your Name _____ Address _____ Phone _____

ERRORS, OMISSIONS, SUGGESTIONS:

SUGGESTIONS

SEND TO DOROTHY SMITH, 78-567.

User Feedback

We want this to be the FINEST - MOST USEFUL printing you have ever seen. If we have slipped-up and you feel there is room for improvement, please tell us at once. You will be doing us a great favor if you call a problem to our attention.

Your Name _____ Address _____ Phone _____

ERRORS, OMISSIONS, SUGGESTIONS:

SUGGESTIONS

SEND TO DOROTHY SMITH, 78-567.

User Feedback

We want this to be the FINEST - MOST USEFUL printing you have ever seen. If we have slipped-up and you feel there is room for improvement, please tell us at once. You will be doing us a great favor if you call a problem to our attention.

Your Name _____ Address _____ Phone _____

ERRORS, OMISSIONS, SUGGESTIONS:

SUGGESTIONS

SEND TO DOROTHY SMITH, 78-567.

User Feedback

We want this to be the FINEST - MOST USEFUL printing you have ever seen. If we have slipped-up and you feel there is room for improvement, please tell us at once. You will be doing us a great favor if you call a problem to our attention.

Your Name _____ Address _____ Phone _____

ERRORS, OMISSIONS, SUGGESTIONS:

SUGGESTIONS

SEND TO DOROTHY SMITH, 78-567.

IV

User Feedback

We want this to be the FINEST - MOST USEFUL printing you have ever seen. If we have slipped-up and you feel there is room for improvement, please tell us at once. You will be doing us a great favor if you call a problem to our attention.

Your Name _____ Address _____ Phone _____

ERRORS, OMISSIONS, SUGGESTIONS:

SUGGESTIONS

SEND TO DOROTHY SMITH, 78-567.

User Feedback

We want this to be the FINEST - MOST USEFUL printing you have ever seen. If we have slipped-up and you feel there is room for improvement, please tell us at once. You will be doing us a great favor if you call a problem to our attention.

Your Name _____ Address _____ Phone _____

ERRORS, OMISSIONS, SUGGESTIONS:

SUGGESTIONS

SEND TO DOROTHY SMITH, 78-567.

User Feedback

We want this to be the FINEST - MOST USEFUL printing you have ever seen. If we have slipped-up and you feel there is room for improvement, please tell us at once. You will be doing us a great favor if you call a problem to our attention.

Your Name _____ Address _____ Phone _____

ERRORS, OMISSIONS, SUGGESTIONS:

SUGGESTIONS

SEND TO DOROTHY SMITH, 78-567.

User Feedback

We want this to be the FINEST - MOST USEFUL printing you have ever seen. If we have slipped-up and you feel there is room for improvement, please tell us at once. You will be doing us a great favor if you call a problem to our attention.

Your Name _____ Address _____ Phone _____

ERRORS, OMISSIONS, SUGGESTIONS:

SUGGESTIONS

SEND TO DOROTHY SMITH, 78-567.

STATIC AWARENESS
HANDLING OF STATIC SENSITIVE COMPONENTS

1. MINIMIZE HANDLING

Check incoming semiconductors against the list of static sensitive devices and label the containers. Make required count of devices without removal from protective packages when possible. Remove the device for testing, inspection, or assembly only at a static-free work station. Never hand a sensitive device to another person without anti-static protection. Never probe or test static-sensitive devices with a volt-ohm meter.

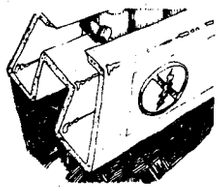

2. KEEP PARTS IN THEIR ORIGINAL CONTAINERS.

Examine device packages to verify conformance to anti-static packaging requirements. Repackage items in the original container if it is anti-static. Use precautionary labels, 006-2388-00 1 1/4 x 3 standard size and 006-2388-01 3/4 x 1 1/2 quarter-standard size. Monitor materials and work surfaces periodically with static meter.

3. DISCHARGE PERSONAL STATIC BEFORE HANDLING DEVICES.

Do not wear nylon or synthetic type gowns. Cotton or a cotton blend is preferred. Do not remove shop coats in an area where unpackaged devices are present. Cover long sleeves with anti-static gauntlets. Wear a ground strap(P/N 006-2404-01) when working on static sensitive devices. Avoid touching devices with clothing or textiles. Don't wear wrist strap over clothing.

4. PICK UP STATIC SENSITIVE DEVICES ONLY BY THE BODY.

They should not be handled by the leads. Avoid touching leads or contacts on subassemblies and printed circuit boards which contain sensitive devices. Use a wrist strap when handling static sensitive devices or circuit boards containing them.

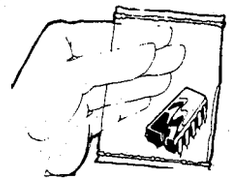

5. USE CONDUCTIVE OR ANTI-STATIC CONTAINERS FOR STORAGE AND TRANSPORT.

There are many materials which serve as anti-static containers and packages. These include metal tubes, conductive foam, anti-static vials, metallized packages, metal foil, carbon impregnated plastic, and pink poly. Tektronix now stocks many sizes of pink poly bags, from 2" x 4" to 18" x 29". The list changes continually so contact Glen Johnson ext.2453 for the latest part numbers and sizes.

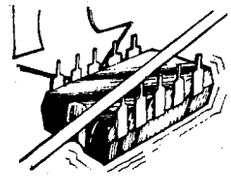

6. DO NOT SUBJECT SEMICONDUCTORS TO SLIDING MOVEMENTS OVER ANY SURFACE AT ANY TIME.

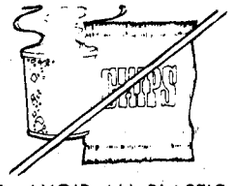

7. AVOID ALL PLASTIC, VINYL AND STYROFOAM IN THE WORK AREA EXCEPT ANTISTATIC PLASTICS.

Do not allow devices to contact ordinary plastic or textiles. Do not touch with fingers unless wrist strap is worn (in place).

Many commonly used items can damage static-sensitive devices. These materials include: Styrofoam cups, plastic coffee cups, plastic coffee cup holders, cigarette packages with cellophane wrappers, plastic combs, vinyl books or folders, plastic covers on work sheets, plastic bottles, plastic bags, potato chip bags, plastic purses, plastic solder suckers, and plastic ash trays. Papers kept in work area should be stored in pink poly bags.

Replace devices in antistatic bag or container when work is complete.

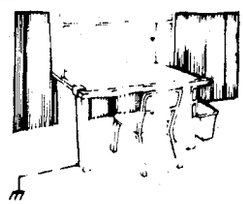

8. REMOVE DEVICES FROM PROTECTIVE PACKAGING ONLY AT A STATIC FREE WORK STATION, WHILE WRIST STRAP IS WORN AND CONNECTED TO ANTISTATIC WORK SURFACE.

STATIC-PROTECTED TOOLS AND MATERIAL

The following materials and tools are currently available for use with static-sensitive parts:

			Tek P/N
Conductive Foam (Velostat)	12"x24"x1/4"		006-2356-00
	5/8"x1-1/2"x1/4"		006-2357-00
	3/4"x2"x1/4"		006-2358-00
Conductive Bench Top	3' x 8'		006-2403-01
Static-Free Bubble Pack	6" x 250'		006-1523-01
	12" x 250'		006-1524-01
	24" x 250'		006-1525-01
Static-Free Plastic Bags	2"x4"	2 mil	006-0763-02
	3"x4"	2 mil	006-1151-02
	3"x6.5"	2 mil	006-0769-02
	5"x5"	3 mil	006-0343-02
	5"x9-1/4"	3 mil	006-0764-02
	9"x12"	3 mil	006-0768-02
	12"x16"	3 mil	006-2395-02
	18"x29"	6 mil	006-0342-02
Anti-Static Wrist Strap	Conductive Fabric		006-2404-00
	Adjustable Bead w/270KΩ resistor		006-2404-01
Desoldering Tool	Silverstat Soldapullt		003-0795-00

STATIC FREE WORK STATION

A static free work station is a work bench which has been covered with a sheet of anti-static material. A metal bolt grounds the material to a metal table support. NOTE: Table tops should not be connected to hard ground (building ground). There should always be a minimum of 200K ohms and a maximum of 500K ohms between the operator and hard ground.

A wrist strap makes ground contact between the operator's skin and the anti-static work surface. If long sleeves are worn, anti-static gauntlets are worn. Avoid static producing materials at a static free work station. These materials include padding, Styrofoam circuit board carriers, regular plastic bags and items listed under the illustration captioned "Avoid all plastic, vinyl, and Styrofoam in the work area, except anti-static plastics."

Keep packaging in contact with the anti-static work surface when being opened and closed. Any NON-anti-static polyethylene surface can cause permanent damage by chemical action and should be avoided. Place paperwork or manufacturing documentation in anti-static envelopes. Only those persons grounded with a wrist strap should touch devices and assemblies which contain static sensitive semiconductors.

SECTIONS 1 THRU 4

TABLE OF CONTENTS

	PAGES(S)
INTEGRATED CIRCUITS, DIGITAL (BY FUNCTION)	
MULTIFUNCTION	
MICROCOMPUTERS	1-2
MICROPROCESSORS	1-2
MICROPROCESSOR SUPPORT	1-2
GENERAL PURPOSE INTERFACE BUS	1-3
MEMORY SELECTION GUIDE	1-4 THRU 1-8
CMOS	1-9 & 1-10
ECL	1-11 & 1-12
MOS	1-13
TTL LISTING BY FUNCTION	1-14 THRU 1-20
TTL FAMILY NUMBER LISTING	1-22 THRU 1-25
INTEGRATED CIRCUITS, SPECIAL FUNCTION	2-2 & 2-3
INTEGRATED CIRCUITS, LINEAR	3-1 THRU 3-5
ARRAYS	3-2
OP AMP DEFINITIONS	3-2
OP AMPS	3-3 THRU 3-5
INTEGRATED CIRCUITS, TEK-MADE	3-6
MICROCIRCUIT COVER LIDS	3-7
NOTES	1-21 & 2-1
CROSS REFERENCE INDEXES	
TEK PART NUMBER TO VENDOR NUMBER	4-2 THRU 4-39
VENDOR NUMBER TO TEK PART NUMBER	4-40 THRU 4-57
PROGRAMMED IC'S	4-58 THRU 4-68
TEK-MADE IC'S	4-69
CASE STYLE DRAWINGS-VOLTAGE REGULATORS	4-70 & 4-71
RELIABILITY NOTES	
FAILURE RATES	4-72
IC THERMAL RESISTANCE	4-72
LEVELS OF QUALITY AND RELIABILITY	4-73
APPLICATION NOTES	
VOLTAGE REGULATOR SELECTION GUIDE	3-0
CMOS LOGIC DRAWBACKS	4-74
CMOS DESIGN CHECKLIST	4-74
COMPARISON OF AVAILABLE OP AMPS	4-75 & 4-76
COMPARATIVE SPECS ON DIGITAL IC'S	4-77
ECL DESIGN CHECKLIST	4-78
PACKAGE NUMBER CODES	4-79
NOTES	4-80

CATALOG WRITER: NANCY KING, EXT. 2582.

ATTENTION
OBSERVE PRECAUTIONS FOR HANDLING
ELECTROSTATIC SENSITIVE DEVICES

INTEGRATED CIRCUITS, DIGITAL

MULTIFUNCTION

THIS APPLIES TO ALL DEVICES ON THIS PAGE.

MICROCOMPUTERS

VENDOR NUMBER	PART NUMBER	** ND	CC	DESCRIPTION	OTHER	†† RC	CASE STYLE
8031	156-1684-00	A	O	Single Component 8-Bit	Scrnd		40 DIP
8035	156-1434-00	A	K	Single Component 8-Bit		1J	40 DIP
8039	156-1387-00	A	L-	8-Bit CPU, RAM, I/O		2J	40 DIP
8741A	156-1365-00	A	O+	Universal Peripheral Intfc			40 DIP
8748	156-1364-00	A	N+	64 x 8 RAM; 1024 x 8 EPROM			40 DIP
6803-1	156-1683-00	A	M+	8-Bit			40 DIP

MICROPROCESSORS

VENDOR NUMBER	PART NUMBER	ND	CC	DESCRIPTION	OTHER	RC	CASE STYLE
Z80A	156-0983-00	A	M+	8-Bit		3H	40 DIP
Z80A	156-0983-02	A	L	8-Bit			40 DIP
1802D	156-1280-00	A	O-	8-Bit		2J	40 DIP
2901A/B	156-1043-00	A	L+	4-Bit Microprocessor Slice		4G	40 DIP
2901A/B	156-1043-02	N	M	4-Bit Microprocessor Slice	Scrnd		40 DIP
2901A/B	156-1043-03	A	M	4-Bit Microprocessor Slice	Scrnd		40 DIP
2909	156-1029-00	N	L+	4-Bit Prcs. Cont. Slice			40 DIP
2909A	156-1029-01	A	L-	4-Bit Prcs. Cont Slice			40 DIP
6500/1EA	156-1402-00	U	O+	Emulator DVC			64 DIP
6502	156-1425-00	U	L	8-Bit		3H	40 DIP
6502A	156-1425-01	U	M	8-Bit (2MHz)			40 DIP
6504	156-1482-00	U	L	8-Bit		3H	28 DIP
6800	156-0426-00	N	L+	8-Bit Parallel CPU		4G	40 DIP
6800	156-0426-01	N	L+	8-Bit Parallel CPU	Chkd		40 DIP
6800	156-0426-05	N	M+	8-Bit Parallel CPU	Scrnd	3F	40 DIP
68B00	156-0426-04	N	L+	8-Bit Parallel CPU		4G	40 DIP
6802	156-1342-00	A	M+	8-Bit w/Clock and RAM			40 DIP
6808	156-1342-01	A	K	8-Bit w/Clock (1.25 MHz)			40 DIP
68B09	156-1494-00	A	N	8-Bit			40 DIP
68B09	156-1494-01	A	N	8-Bit	Scrnd		40 DIP
68B09E	156-1720-00	A	N-	2 MHz, HMOS			40 DIP
Z8001A	156-1525-00	A	O+	16-Bit			48 DIP
Z8002A	156-1558-00	A	O+	16-Bit			40 DIP
8080A	156-0954-00	N	L	8-Bit Parallel CPU		3I	40 DIP
8085	156-1088-00	N	L-	8-Bit		4H	40 DIP
8085	156-1088-01	A	L+	8-Bit	Scrnd		40 DIP
8085A-2	156-1088-02	A	L	8-Bit		3E	40 DIP
8086	156-1416-00	A	O+	16-Bit NMOS	Scrnd	3E	40 DIP
8086-2	156-1416-01	A	O+	16-Bit NMOS			40 DIP
8088	156-1609-00	A	N+	8-Bit			40 DIP
8088	156-1609-01	A	N+	8-Bit, Ceramic Pkg only			40 DIP
TMS9900	156-0935-00	N	O	16-Bit		2I	64 DIP
TMS9900	156-0935-02	N	O	16-Bit	Scrnd		64 DIP
TMS9900	156-0935-03	N	O+	16-Bit, Ceramic Pkg only			64 DIP
SBP9900A	156-1404-00	N	O+	16-Bit Bipolar			64 DIP
SBP9989CJ	156-1636-00	N	O+	16-Bit Bipolar			64 DIP
68000L8	156-1445-00	A	O+	16-Bit NMOS		3G	64 DIP
68000L10	156-1445-02	A	O+	16-Bit NMOS			64 DIP

MICROPROCESSOR SUPPORT

VENDOR NUMBER	PART NUMBER	ND	CC	DESCRIPTION	OTHER	RC	CASE STYLE
Z80A-CTC	156-1620-00	A	L	Counter Timer Circuit	Scrnd		28 DIP
Z80A-PIO	156-1612-00	A	L	Parallel I/O Circuit	Scrnd		40 DIP
Z80A-SIO/1	156-1424-01	A	N-	Serial Input/Output	Scrnd		40 DIP
µPB765	156-1412-00	A	N+	Single/Double Density Floppy Disc Controller			40 DIP
2653	156-1572-00	A	N	Polynomial Gen Checker			16 DIP
2661-2	156-1460-00	A	N-	Enhanced Programmable Comm Interface		3E	28 DIP
SC2681	156-1737-00	U		Dual Asynchr. Rcvr/Xmtr	Scrnd		
2940	156-1565-00	A	N+	DMA Addrs Gen w/3 St Output			28 DIP
2942	156-1385-00	A	N+	Program Timer/Controller, DMA Address Generator		2H	22 DIP
2952	156-1839-00	U		Octal Bidirect I/O Port	Scrnd		24 DIP
2953	156-1738-00	U		8-Bit Bidirect I/O Port	Scrnd		
2964B	156-1749-00	U	N+	Dynamic RAM Controller	Scrnd		40 DIP
2966	156-1740-00	U	K+	Dynamic RAM Driver	Scrnd		20 DIP
3242	156-0965-00	N	K+	Addrs Mux, Refresh Counter		3E	28 DIP
3871	156-1242-00	N	M+	Peripheral I/O Unit		1J	40 DIP

MICROPROCESSOR SUPPORT (CONT)

VENDOR NUMBER	PART NUMBER	ND	CC	DESCRIPTION	OTHER	RC	CASE STYLE
4289	156-1113-00	N	M	Standard Memory Interface			40 DIP
6402	156-1310-00	A	K+	UART		1J	40 DIP
6402	156-1310-02	A	L-	UART	Scrnd		40 DIP
6522	156-1539-00	A	L	Peripheral Interface Adapter w/Timer			40 DIP
6531	156-1530-00	A	N-	RAM-ROM-I/O, NMOS		3F	40 DIP
6545A	156-1785-00	A		CRT Controller	Scrnd		40 DIP
6821	156-0427-03	A	L-	Peripheral Intfc Adapter			40 DIP
6821	156-0427-04	A	K	Peripheral Intfc Adapter	Scrnd	4F	40 DIP
68B21	156-1205-00	A	K	Peripheral Intfc Adapter		4F	40 DIP
68B21	156-1205-01	A		Peripheral Interfc Adapter	Scrnd		40 DIP
6840	156-1549-00	A	L+	Programmable Timer Module	Scrnd		28 DIP
68B40	156-1426-00	A	K+	Programmable Timer Module			28 DIP
6850	156-0658-00	A	J+	Asynchr Comm Intfc Adapter		2J	24 DIP
6850	156-0658-01	A	M-	Asynchr Comm Intfc Adapter	Scrnd		24 DIP
68B50	156-1206-00	A	K	Asynchr Comm Int		3E	24 DIP
6852	156-1013-00	A	L	Synchr Serial Adapter	Chkd		24 DIP
8155	156-1730-00	A		RAM w/I/O Ports & Timer			40 DIP
8202	156-1442-00	N	N+	Dynamic RAM Controller			40 DIP
8202A	156-1599-00	U	N+	Dynamic RAM Controller	Scrnd		40 DIP
8203-3	156-1697-00	U	N	Dynamic RAM Controller			40 DIP
8212	156-0962-00	N	K+	8-Bit I/O Port			24 DIP
8214	156-0963-00	N	M-	Priority Interupt Cont, Ceramic Pkg only			24 DIP
8224	156-0945-00	N	J+	Clock Generator/Driver		3G	16 DIP
8224	156-0945-01	N	K	Clock Generator/Driver	Scrnd		16 DIP
8228	156-0947-00	N	L	System Cont/Bus Driver		2I	28 DIP
8228	156-0947-02	N	M-	System Cont/Bus Driver	Scrnd		28 DIP
8243	156-1356-00	A	K+	Input/Output Expander			24 DIP
8243	156-1356-01	A		Input/Output Expander	Scrnd		24 DIP
8250	156-1336-00	U	M	Asynchr. Comm Element			40 DIP
8251A	156-0877-00	A	L	USART		3H	28 DIP
8251A	156-0877-01	A	L+	USART	Scrnd		28 DIP
8251A	156-0877-04	A	K+	USART	Scrnd		28 DIP
8253	156-1036-00	A	M	Program Interval Timer		3E	24 DIP
8253	156-1036-01	A	M+	Program Interval Timer	Scrnd		24 DIP
8255A	156-1570-00	A	L-	Program Peripheral Intfc	Scrnd		40 DIP
8255A	156-1570-01	A		Program Peripheral Intfc	Scrnd		40 DIP
8257	156-1202-00	N	M	Program DMA Controller	Scrnd		40 DIP
8259A	156-1204-01	A	N-	Program Interpt Controller	Scrnd		28 DIP
8274	156-1656-00	A	O	Multi Protocol Serial Cont			40 DIP
8275	156-1455-00	A	O-	CRT Controller			40 DIP
8279-5	156-1535-00	A	M	Prog Keybd/Display Interfc			40 DIP
8284	156-1428-02	A	M-	Clock Generator/Driver		3G	18 DIP
8288	156-1427-00	A	M+	System Cont/Bus Driver			20 DIP
8288	156-1427-01	A	N-	System Cont/Bus Driver	Scrnd		20 DIP
8755A	156-1531-00	A	O+	8-Bit EPROM with I/O Port	Scrnd		40 DIP
9007P	156-1763-00	A		CRT Video Processor	Scrnd		40 DIP
9513	156-1550-00	A	N+	System Timing Controller	Scrnd		40 DIP
9901	156-1296-00	N	L	Programbl Systems Intfc			40 DIP
9902	156-1295-00	N	L	Asynchr Comm Control			18 DIP
9904A	156-1692-00	A		Clock Generator/Driver			20 DIP
9927	156-1386-00	A	O-	CRT Controller - SMC			40 DIP
9927	156-1386-01	A	N+	CRT Controller - SMC	Scrnd		40 DIP
58167	156-1601-00	A	M-	Real Time Clock Calendar			24 DIP
68121L	156-1660-00	A	O	Intell Peripheral Contrlr			48 DIP
8237-2	156-1606-00	A	O-	Multimode DMA Controller			40 DIP
74LS362	156-0993-00	N	K+	Clock Generator/Driver		1J	20 DIP
74LS362	156-0993-01	A	M	Clock Generator/Driver	Scrnd		20 DIP
9904-40	156-0993-02	N	N-	Clock Generator/Driver			20 DIP
AY3-1015D	156-0361-03	U		UART			40 DIP
19-14038	156-1605-00	N	O-	DMA Chip-DC010 LSI 11			20 DIP

INTEGRATED CIRCUITS, DIGITAL (CONT)

MULTIFUNCTION

VENDOR NUMBER	PART NUMBER	** ND	CC	DESCRIPTION	OTHER	†† RC	CASE STYLE
GENERAL PURPOSE INTERFACE BUS							
3440P	156-1219-00	A	L	Transceiver		3F	16 DIP
3440P	156-1219-03	A		Transceiver	Scrnd		16 DIP
3441P	156-0600-00	A	J	Quad Bus Transceiver		4F	16 DIP
3441P	156-0600-02	A		Quad Bus Transceiver	Scrnd		16 DIP
3441P	156-0600-03	A		Quad Bus Transceiver	Scrnd		16 DIP
3448	156-1133-00	A	J+	Quad 3-State Transceiver			16 DIP
8291	156-1257-00	A	N	Talker/Listener			40 DIP
9914AN	156-1444-01	A	O	Protocol/Controller			40 DIP
9914AJL	156-1444-02	A		Protocol/Controller			40 DIP
AM29824	156-1736-00	A		Hi Perf Bus Intfc Register			40 DIP
75160	156-1414-00	A	K	Data Transceiver			20 DIP
75160	156-1414-01	A	K	Data Transceiver			20 DIP
75160	156-1414-02	A	K	Data Transceiver			20 DIP
75161	156-1415-00	A	K	Octal Gate Transceiver			20 DIP
75161	156-1415-01	A		Octal Gate Transceiver			20 DIP
75162	156-1459-00	A	K+	GPIB Bus Mgmt Ckt			22 DIP
96LS488	156-1666-00	U	O+	GPIB Bus Mgmt Ckt			48 DIP

The familiar "lightning bolt" symbol used to denote electrostatic discharge hazard has been replaced with a "reaching hand" as the official notice for electrostatic-sensitive devices. The reaching hand symbol represents the danger to ESD-sensitive devices from handling by an unprotected worker. The use of this new symbol is noted in EIA Standard RS-471. The lightning bolt, associated with electrical hazards to life, was not acceptable on an international basis.

THIS APPLIES TO ALL DEVICES ON THIS PAGE.

1

†† CATALOG RELIABILITY CODES

USAGE/YR	CODE
≥10	1
≥100	2
≥1 000	3
≥10 000	4
≥100 000	5
≥1 000 000	6
≥10 000 000	7

FAILURE FREQ	CODE		%/YR (median)
1/100 000	A	=	.001
1/50 000	B	=	.002
1/20 000	C	=	.005
1/10 000	D	=	.01
1/5 000	E	=	.02
1/2 000	F	=	.05
1/1 000	G	=	.1
1/500	H	=	.2
1/200	I	=	.5
1/100	J	=	1.0+

For further explanation of this code, see page 4-72.

**NEW DESIGN RECOMMENDATION FROM COMPONENT ENGINEERING:

A = Acceptable
N = Not Recommended
U = Undefined

COST CODE

(CC COLUMN)

CODE	≈ VALUE with -	≈ VALUE no suffix	≈ VALUE with +
A	.2¢	.5¢	.75¢
B	1.25¢	1.5¢	2¢
C	2.5¢	3¢	3.75¢
D	4.25¢	5¢	6¢
E	7¢	8¢	10¢
F	13¢	15¢	18¢
G	22¢	25¢	35¢
H	40¢	50¢	60¢
I	65¢	75¢	$1
J	$1.25	$1.50	$2
K	$2.50	$3	$3.75
L	$4.25	$5	$6
M	$7	$8	$10
N	$13	$15	$18
O	$22	$25	$35+

NOTE: Costs may vary from order to order due to order quantities, vendor, etc.

ATTENTION
OBSERVE PRECAUTIONS FOR HANDLING
ELECTROSTATIC SENSITIVE DEVICES

THIS APPLIES TO ALL DEVICES ON THIS PAGE

MEMORY SELECTION GUIDE

1

DYNAMIC RAM (DRAM)

PROCESS	BIT GEOMETRY	PART NUMBER	** ND	CC	†† RC	VENDOR	VENDOR NO.	PINS	PACKAGE	SUPPLY (V)	POWER (mW)	READ (MAX nS)	WRITE (MIN nS)
MOS NMOS	4096 x 1	156-0972-00	N	K		Mostek	MK4027-4	16	Ceramic	±5, +12	462	250	375
		156-1027-00	N	K+		Mostek	MK4027P-3	16	Ceramic	±5, +12	462	200	375
		156-1112-00	N	L-		Mostek	MK4027P-2	16		±5, +12	462	150	320
	16384 x 1	156-0968-00	N	J+		ITT NEC	4116-3J 416-2	16	Ceramic	±5, +12	462	200	375
		156-0968-02	N	J+	6E	ITT NEC	4116-3J 416-2	16	Ceramic Screened	±5, +12	462	200	375
		156-1353-00	N	M		NEC	UPD416D-3	16	Ceramic	±5, +12	462	150	320
		156-1552-00	N	K+		Hitachi Intel	HM4816A-4/DG-16B D2118-4	16	Ceramic	+5.	150	270 min	270
		156-1798-00	N			Hitachi	HM4816AP-7	16	Plastic	+5.	140	150	320
	65536 x 1	156-1626-00	A	N-		Hitachi	HM4864-3DC	16	Cer or Cerdip	+5.	330	200	335
	131072 x 1	156-1813-00	U			Elec Design	EDH4528-20	18	LCC on Substr	+5.	286	200	375

NON-VOLATILE RAM

FUNCTION	PROCESS	BIT GEOMETRY	PART NUMBER	** ND	CC	†† RC	VENDOR	VENDOR NO	PINS	PACKAGE	SUPPLY (V)	READ/WRITE (nS)	STORE/RECALL
MOS	NMOS	1024 x 1	156-1654-00	A	M+		XICOR	X2201	18	Ceramic	+5.	300/300	10mS/1500nS

FACTORY PROGRAMMABLE XROM

FUNCTION	PROCESS	BIT GEOMETRY	PART NUMBER	** ND	CC	†† RC	VENDOR	VENDOR NO.	PINS	PACKAGE	SUPPLY (V)	POWER (mW) ACTIVE	POWER (mW) STANDBY	READ ACCESS TIME(nS)
BIPOLAR TTL	4096	512 x 8	062-4589-00	N			Signetics	N8205N	24	Cer or Plastic	+5.	850		75
	8192	1024 x 8	062-4175-00	N			AMD	AM9208DC	24	Ceramic	+5.	1W		400
MROM NMOS	16384	2048 x 8	062-4171-00	N			AMI	6831BC/E	24	Ceramic	+5.	300		450
			062-4171-01	N			AMI	6831BP	24	Plastic	+5.	300		450
			062-4177-00	N			Motorola	MCM6832L	24	Ceramic	±5, +12			550
			062-4586-00	N			Gen Instr	8316A	24	Cer or Plastic	+5.	200		850
			062-4591-00	N			Motorola	MCM6590L	24	Ceramic	+5.			750
	32768	4096 x 8	062-4170-00	A			Synertek	SYC2332	24	Cer or Plastic	+5.	750		450
			062-4172-00	A			Signetics	2632FN	24		+5.	400		450
			062-4182-00	A			T.I.	TMS4732J/JD	24	Cer or Plastic	+5.	400		450
			062-4182-01	A			T.I.	TMS4732N	24		+5.	400		450
			062-4504-00	A			Motorola	MCM68A332	24	Cer or Plastic	+5.	400		350
			062-4654-00	A			Natl Semic	MM52132	24	Cer or Cerdip	+5.	1000		450
			062-4670-00	A			Synertek	SYC2333	24	Ceramic	+5.	750		450
			062-4670-01	A			Synertek	SYP2333	24	Plastic	+5.	750		450
			062-5549-00	A			EA	EA8332A-DC	24	Ceramic	+5.	750		450
			062-5549-01	A			EA	EA8332A-PC	24	Cer or Cerdip	+5.	750		450
MOS	65536	8192 x 8	062-4325-00	N			Mostek	MK36000P/J-4	24	Cer or Cerdip	+5.	220	35	250
			062-4325-01	N			Mostek	MK36000N-4	24	Plastic	+5.	220	35	250
			062-4503-00	N			Mostek	MK36000P/J-5	24	Cer or Cerdip	+5.	220	35	300
			062-4503-01	N			Mostek	MK36000N-5	24	Cer or Plastic	+5.	220	35	300
			062-5456-00	A			NEC	UPD2364D	24	Cer or Cerdip	+5.	750		450
			062-5457-00	A			Synertek	SYC2364	24	Cer or Cerdip	+5.	650		450
			062-5879-00	A			Motorola	68B364L	24	Cer or Cerdip	+5.	270	55	250
PMOS	2048	256 x 8	062-4592-00	N			Natl Semic	MM5213	24	Cer or Plastic	+5.			600
	4096	512 x 8	062-4585-00	N			Natl Semic	MM5214	24	Cer or Plastic				
ROM MOS NMOS	8064	128 x 7 x 9	156-0950-00	A	L-	3H	Motorola	MCM6575	24	Cer or Cerdip	+5.	525		350
PMOS	3072	64 x 6 x 8	156-0871-00	N			Signetics	N2516	24	Plastic	+5.			450

MEMORY SELECTION GUIDE (CONT)

STATIC RAM (SRAM)

FUNCTION	PROCESS	BIT GEOMETRY	PART NUMBER	** ND	CC	†† RC	VENDOR	VENDOR NO.	PINS	OTHER	SUPPLY (V)	I_{Sup} ACTIVE (mA)	STANDBY (mA)	CYCLE TIME READ (MAX)	CYCLE TIME WRITE (MIN)
BIPOLAR	ECL	64 — 16 x 4	156-0847-00	A	K-		Motorola	MC10145L	16	Ceramic Pkg	-5.2	-135		15.	14.
			156-0847-01	A	K	4D	Motorola	MC10145LDS	16	Cer; Screened	-5.2	-135		15.	14.
			156-0881-00	A	N		Fairchild	95400DC	16	Ceramic Pkg	-5.2	-125		17.5	25.5
		128 — 128 x 1	156-1035-01	N	L		Motorola Fairchild	MC10147LDS 10405DC	16	Cer; Screened	-5.2	-100		12.	15.
		256 — 256 x 1	156-0657-00	N	L-	2J	Motorola National	MCM10144L/ SCM62462L DM10414C-J	16	Ceramic Pkg	-5.2	-130		35.	33.
			156-0657-01	N	L-		Motorola	MCM10144L	16	Checked	-5.2	-130		35.	33.
			156-0657-02	N	L-		Motorola National	MCM10144L DM10414C-J	16	Screened	-5.2	-130		35.	33.
		1024 — 256 x 4	156-1297-00	N	M	4B	Fujitsu	MB7072EC	22	Ceramic Pkg	-5.2	-200		15.	15.
			156-1297-01	N	M	4C	Fujitsu	MB7072EC	22	Screened	-5.2	-200		15.	15.
			156-1578-00	N	N		Fujitsu	MB7071H	24	Ceramic Pkg	-5.2	-200		10.	12.
			156-1635-00	A	M+		Hitachi Fujitsu	HM10422 MBM10422	24	Cer or Cerdip	-5.2	-220		10.	10.
		1024 — 1024 x 1	156-0761-00	A	M-		Motorola AMD	MCM10146L/ SCM30121L AM10415ADC	16	Ceramic Pkg	-5.2	-150		29.	35.
			156-0761-01	A	M		Motorola AMD	MCM10146L AM10415ADC	16	Checked	-5.2	-150		29.	35.
			156-1685-00	A	M		Hitachi	HM2112-1	16	Ceramic Pkg	-5.2	-200		8.	12.
		1024 — 1024 x 4	156-1679-00	A			Fujitsu Hitachi	MBM10474 HM10474-1	24	Screened	-5.2	-200		25.	28.
		4096 — 4096 x 1	156-1227-00	N A A A	O-		Fairchild Hitachi NEC Fujitsu	F10470DC HM10470DG B10470 MBM10470-20	18	Ceramic Pkg	-5.2	-200		35.	35.
			156-1227-01	A	O		Fairchild Fujitsu	F10470DC MBM10470-20	18	Screened	-5.2	-200		35.	35.
	TTL	64 — 16 x 4	156-0192-00	N	I	3H	T.I.	SN7489N	16	Cer or Plastic	+5.	110		50.	50.
			156-0192-02	N	J+		T.I.	SN7489N3	16	Screened	+5.	110		50.	50.
			156-0199-00	N	I+		Signetics	N82S25N/F	16		+5.	105		50.	40.
			156-0339-00	N	J	3F	Natl Semic	DM8599N	16		+5.	120		45.	45.
			156-0339-02	N	J		Natl Semic	DM8599N	16	Screened	+5.	120		45.	45.
			156-0599-00	N	J		Natl Semic AMD	DM74LS189 AM27LS03	16	Plastic Pkg	+5.	25		80.	80.
			156-0599-01	N	J+		Natl Semic AMD	DM74LS189JA+ AM27LS03	16	Scrnd & BurnIn					
			156-1189-00	A	K+	3J	AMD AMD	AM74S189J AM27S03J	16	Ceramic Pkg	+5.	110		35.	25.
			156-1189-01	A	K	3G	AMD AMD	AM74S189JB AM27S03DM	16	Screened	+5.	110		35.	25.
			156-1633-00	A	L-		AMD	AM27S03ADCB	16	Cer or Cerdip Pkg; Screened	+5.	100		25.	20.
		256 — 256 x 1	156-1357-00	A	K	4E	AMD AMD	AM29721PCB2/DCB2 AM27LS00DC/PC	16	Screened	+5.	70		45.	50.
		576 — 64 x 9	156-1171-00	N	N	3F	Signetics	N82S09-I	28	Cer Pkg, Scrnd	+5.	190		45.	35.
		1024 — 256 x 4	156-1223-00	A	N		Fairchild	93422	22	Ceramic Pkg	+5.	155		45.	35.
			156-1293-00	A	M		Fairchild AMD	93L422PC AM93L422DC	22	Plastic Pkg	+5.	80		60.	60.
			156-1293-01	A N			Tektronix AMD	AM93L422BPC/DC							
			156-1360-00	A	M-	5E	Fairchild AMD	93422DC/PC AM93422PC/DC	22		+5.	155		45.	45.
			156-1360-01	A	M-		Fairchild AMD	93422DC/PC AM93422PC/DC	22	Screened	+5.	155		45.	45.
MOS	CMOS	4096 — 1024 x 4	156-1301-00	N	M+		Fujitsu	MB8414E	18	Ceramic Pkg	+5.	7	.05	420.	420.
			156-1301-01	N	M+		Fujitsu	MB8414E	18	Screened	+5.	7	.05	420.	420.
			156-1359-00	N	L		Fujitsu	MB8414E/C	18		+5.	7	.5	500.	500.
			156-1359-01	N	L	3I	Fujitsu	MB8414E/C	18	Screened	+5.	7	.5	500.	500.
			156-1359-02	N	L		Fujitsu	MB8414E/C	18	Ceramic Pkg	+5.		.05	370.	370.
			156-1429-00	A	M-		NEC	μPD444C	18		+5.	40	50μA	450. min	450.
			156-1429-01	A	M-	3H	NEC	μPD444	18	Screened	+5.	40	50μA	450.	450.
			156-1786-00	A			Hitachi	HM4334P-3	18	Plastic Pkg	+5.	7	100μA	460.	460.
		16384 — 2048 x 8	156-1632-00	A	N-		Hitachi	HM6116LP-4	24		+5.	70	12	250.	250.
			156-1706-00	N			Toshiba	TC5516APL	24		+5.	70	3	250.	250.

** NEW DESIGN RECOMMENDATION FROM COMPONENT ENGINEERING:

A = Acceptable
N = Not Recommended
U = Undefined
X = Do Not Use

†† FOR RELIABILITY CODES, SEE PAGE 1-3.

MEMORY SELECTION GUIDE (CONT)

STATIC RAM (SRAM) (CONT)

FUNCTION	PROCESS	BIT GEOMETRY	PART NUMBER	** ND	CC	†† RC	VENDOR	VENDOR NO.	PINS	OTHER	SUPPLY (V)	I_{Sup} ACTIVE (mA)	STANDBY (mA)	CYCLE TIME READ (MIN)	CYCLE TIME WRITE (MIN)
MOS	NMOS	1024 / 128 x 8	156-0716-00	A	K-	4G	AMI	S6810-A	24	Ceramic Pkg	+5.	130		500.	500.
							Motorola	MCM6810	24	Ceramic Pkg	+5.			450.	450.
			156-0716-01	A	L	3G	AMI	S6810A	24	Screened	+5.	70		450.	450.
							Motorola	MCM6810LDS							
			156-1591-00	A	L		Motorola	MCM68B10SD	24	Scrnd, Ceramic or Cerdip	+5.	100		250.	250.
		1024 / 256 x 4	156-0698-00	N	J+		AMD	AM9101BDC	22	Cer or Plastic	+5.	60		450.	270.
							Intel	B2101A-4							
							Signetics	2101-1N							
			156-0698-01	N	J+		AMD	AM9101BDC	22	Checked	+5.	60		450.	270.
							Intel	B2101A-4							
							Signetics	2101-1N							
			156-1188-00	N	K		AMD	AM9111DDC	18	Ceramic Pkg	+5.	70		250.	170.
							Synertek	SY2111A-2							
			156-1298-00	N	L+		Synertek	SY21H01-2	22	Ceramic Pkg	+5.	90		200.	200.
			156-1298-01	N	L+		Synertek	SY21H01-2	22	Screened	+5.	90		200.	200.
		1024 / 1024 x 1	156-0291-00	N	I	4E	AMD	2102	16	Scrnd, Plstc Pkg	+5.	50		350.	350.
							Fairchild	2102LFDC/PC							
							Natl Semic	2102AN							
							Signetics	2102N							
			156-0291-01	N	I	4G	AMD	2102	16	Checked	+5.	50		350.	350.
							Fairchild	2102FDC/PC							
							Natl Semic	MM2102AN							
							Signetics	2102N							
			156-0893-00	N			Fairchild	2102FDC/PC	16	Cer or Plastic	+5.	50		350.	350.
							Natl Semic	2102AN							
			156-0893-01	N			Fairchild	2102FDC/PC	16	Checked	+5.	50		350.	350.
							Natl Semic	2102AN							
			156-1278-00	A	K+		Intel	CD2115A	16	Ceramic Pkg	+5.	125		45.	40.
		4096 / 1024 x 4	156-0943-00	N	M+		EMM Semic	4804A	18	Ceramic Pkg	+5.	100		450.	450.
			156-0943-01	N	M+		EMM Semic	MM4804A	18	Checked	+5.	100		450.	450.
			156-1028-00	A	L+	3G	Intel	2114AL-4	18	Ceramic Pkg	+5.	135		450.	450.
							AMD	AM9114BDC							
			156-1028-01	A	L+	3I	Intel	2114AL-4	18	Screened	+5.	135		450.	450.
			156-1042-00	N	M+		AMD	AM9130BDC	22	Ceramic Pkg	+5.	110		690.	690.
			156-1127-00	A	J+	5C	AMD	AM91L14BDC	18	Ceramic Pkg	+5.	50		450.	450.
							Intel	D2114AL-4/S7049							
							Intersil	1M7114LCJN							
			156-1281-00	N	K		Intel	2114AL-4/S7129	18	Plastic Pkg	+5.	50		200.	200.
			156-1323-00	A	L+		AMD	AM91L24CDC	18	Ceramic Pkg	+5.	50	20	300.	300.
			156-1323-01	A	L+	4B	AMD	AM91L24CDC	18	Screened	+5.	50	20	300.	300.
			156-1461-00	A	J+	4B	Intel	D2114AL-4/S7127	18	Cer or Cerdip	+5.	40		200.	200.
			156-1461-01	A	J+		Intel	C2114AL	18	Screened	+5.	40		200.	200.
			156-1574-00	A	M		Intel	D2148HL-3	18	Cer or Cerdip	+5.	125	20	55.	55.
			156-1580-00	A	M+		Intel	D2148HL	18	Cer or Cerdip	+5.	125	20	70.	70.
			156-1614-00	A	L		Intel	A2114AL-3	18	Cer or Cerdip	+5.	40		150.	150.
			156-1695-00	A			Intel	P21149H-2	18	Cer or Cerdip	+5.	180		45.	45.
		4096 / 4096 x 1	156-0987-00	N	M+	4F	AMD	9140BDC	22	Ceramic Pkg	+5.	110	56	620.	620.
			156-0987-01	N			AMD	9140BDC	22	Checked	+5.	110	56	620.	620.
			156-0987-02	N	M+	3F	AMD	9140BDC	22	Screened	+5.	110	56	620.	620.
			156-1228-00	A	L	5D	Hitachi	HM6147	18	Cer or Cerdip	+5.	160	20	70.	70.
							Intel	CD2147H							
							NEC	D2147D-2							
							Toshiba	TMM2147							
			156-1613-00	A	K+		AMD	AM21L47-55DC	18	Cer or Cerdip	+5.	115	6	55.	55.
							Hitachi	HM6147G-3							
			156-1690-00	A	K		Intel	21474-2	18		+5.	170	30	45.	45.
							AMD	2147-45DC							
		8192 / 1024 x 8	156-1382-00	N	M		Mostek	MK4801AP/J-4	24	Cer or Cerdip	+5.	80	60	250.	250.
			156-1382-01	N			Mostek	MK4118A-4P/J	24	Ceramic Pkg	+5.	80		250.	250.
			156-1382-02	N			Mostek	MK4118AN-4	24	Ceramic Pkg	+5.	80		250.	250.
			156-1383-00	N	N-		Mostek	MK4118A-2	24	Plastic Pkg	+5.	80	60	150.	150.
			156-1575-00	N	N+		Mostek	MK4118AP/J-1	24	Ceramic Pkg	+5.	80	60	120.	120.
		16384 / 2048 x 8	156-1594-00	A	N		Hitachi	HM6116P-3	24	Plastic Pkg	+5.	80		200.	200.
		16384 / 16384 x 1	156-1615-00	A	N-	5A	Inmos	IMS1400-55	20	Cer or Cerdip	+5.	180	30	55.	55.
							NEC	UPD2167-3							
		16384 / 4096 x 4	156-1694-00	N			Inmos	IMS1420S-55	20	Ceramic Pkg	+5.				
		65536 / 8192 x 8	156-1734-00	N			Intel	2186	28	Ceramic Pkg	+5.				

THIS APPLIES TO ALL DEVICES ON THIS PAGE

** NEW DESIGN RECOMMENDATION FROM COMPONENT ENGINEERING:

A = Acceptable
N = Recommended

MEMORY SELECTION GUIDE (CONT)

FIELD PROGRAMMABLE XROM

FUNCTION	PROCESS	BIT GEOMETRY		PART NUMBER	** ND	CC	†† RC	VENDOR	VENDOR NUMBER	PINS	OTHER	SUPPLY (V)	POWER (mW) ACTIVE	POWER (mW) STANDBY	READ ACCESS TIME(ns)
PROM	BIPOLAR	256	32 x 8	156-1037-00	A	M+		Motorola	10139L	16	Cer or Plastic	-5.2	580		15.
			64 x 4	156-1673-00	A	M+		Motorola	MCM10149L	16	Cer or Cerdip	-5.2	806		25.
	ECL	256	32 x 8	156-0305-00	A	K-		AMD	27S18CDE	16		+5.	450		40.
				156-0785-00	N	J	4B	Intersil	IM5610CJE	16		+5.	500		540.
				156-1151-00	A	J+		Natl Semic	DM74S288J	16	Ceramic Pkg	+5.	550		30.
				156-1325-00	A	J+		T.I.	TBP18SA030	16	Ceramic Pkg	+5.	400		40.
				156-1814-00	A			AMD	27S19	16	Ceramic Pkg	+5.	600		40.
		1024	256 x 4	156-0905-00	N	J+		Fairchild	93427DC	16	Ceramic Pkg				
				156-1343-00	A	K-		Signetics	N82S129J	16	Ceramic Pkg	+5.	600		50.
				156-1452-00	A	J+		Natl Semic	DM74S287J	16	Cer or Cerdip	+5.	650		50.
				156-1453-00	N	K		MMI	6301	16	Cer or Cerdip	+5.	650		55.
				156-1628-00	A	J+		MMI	63S141J	16	Screened	+5.	650		45.
	STTL	2048	256 x 8	156-0960-00	N	K+		T.I.	TBP18S22	20	Ceramic	+5.			
				156-1560-00	A	L		MMI	6309-1/J20	20		+5.	900		70.
			512 x 4	156-0859-00	N	K+		MMI	MMI6306-1J	16	Ceramic Pkg	+5.	650		60.
		4096	512 x 8	156-1372-00	N	M-		T.I.	TBP18S42	20	Ceramic Pkg	+5.	800		75.
				156-1392-00	A	M+		MMI	6349-1J	20	Ceramic Pkg	+5.	775		70.
				156-1462-00	A	M-		AMD	AM27S29DC	20	Ceramic Pkg	+5.	800		55.
			1024 x 4	156-1213-00	A	L+		MMI	6353-1J	18	Ceramic Pkg	+5.	875		60.
		8192	1024 x 8	156-0973-00	N	N+		Signetics	N82S2708E	24	Ceramic Pkg				
				156-0976-00	A	L+		Signetics	N82S181F	24	Ceramic Pkg	+5.	800		70.
				156-1438-00	N	N-		T.I.	TBP28S86N	24		+5.	920		70.
				156-1608-00	A	M+		AMD	AM27S181D-24-1	24	Cer or Cerdip	+5.	970		60.
			2048 x 4	156-1182-00	A	N		Signetics	N82S185F	18	Ceramic Pkg	+5.	600		100.
	TTL LSTTL	16384	2048 x 8	156-1354-00	A	O		Signetics	N82S191F/1	24	Ceramic Pkg	+5.	875		80.
				156-1672-00	A	O-		AMD	AMD27S291DC	24	Cer or Cerdip	+5.			50.
				156-1675-00	A	O-		AMD	AMD25S191ADC	24	Cer or Cerdip	+5.			35.
				156-1687-00	A	N-		AMD	AMD27S1910C	24	Cer or Cerdip	+5.			50.
		8192	1024 x 8	156-1526-00	A	N		Signetics	N82LS181	24		+5.	425		120.
		2096	524 x 4	156-1146-00	N	K+		Intersil	IM5604CDE	16	Ceramic Pkg	+5.	700		70.
EPROM	MOS	8192	1024 x 8	156-0708-00	N	K+		Motorola	MCM2708L	24	Ceramic Pkg				
								AMD	AM2708						
	NMOS	16384	2048 x 8	156-1017-00	A	L		Intel	2716	24	Ceramic Pkg	+5.	525	132	450.
				156-1101-00	A	N-		T.I.	TMS2716JL	24	Ceramic Pkg	±5, +12.	500		450.
				156-1417-00	A	L		Intel	D2716-1	24	Ceramic Pkg	+5.	525	132	350.
		32768	4096 x 8	156-1403-00	A	M		Intel	D2732	24	Ceramic Pkg	+5.	750	150	450.
				156-1596-00	A	M+		Hitachi	HN462532-DC-24C	24	Ceramic Pkg	+5.	895	195	450.
				156-1598-00	A	L+		Intel	D2732A-3	24	Ceramic Pkg	+5.	790	185	300.
				156-1625-00	A	M-		Intel	D2732A	24			790	160	250.
				156-1625-01	A			Intel	D2732A		Screened				
				156-1651-00	A			AMD	AM2732-1DC	24	Cer or Cerdip	+5.	787	157	350.
		65536	8192 x 8	156-1559-00	N	O+		Motorola	MCM68764C/L	24	Ceramic Pkg	+5.	650	250	450.
				156-1603-00	A	N		Intel	D2764-3	28	Cer Pkg, Scrnd	+5.	600	265	300.
				156-1610-00	N	O+		Motorola	MCM68766C35	24	Cer Pkg, Scrnd	+5.	850		
				156-1630-00	A	N		Intel	D2764-4	28	Cer or Cerdip	+5.	600	265	450.
				156-1652-00	A			Intel	D2764	28	Cer or Cerdip	+5.			250.
								Fujitsu	MBM2764-25						
				156-1686-00	N	O+		Motorola	MCM68764-C35	24	Cer or Cerdip	+5.			350.
		131072	16384 x 8	156-1696-00	A	O		Intel	D27128-3	28	Ceramic Pkg	+5.	525	236	300.
EEPROM	PMOS	1400	100 x 14	156-1566-00	N	J+		GI	ER1400	14	Cer or Plstc		-35		
	NMOS	16384	2048 x 2	156-1602-00	A	O+	3I	Intel	D2816-3	24	Ceramic	+5, -22.			
				156-1735-00	A			Intel	D2817-4	28	Ceramic Latches	+5, +21.			

ATTENTION
OBSERVE PRECAUTIONS FOR HANDLING
ELECTROSTATIC SENSITIVE DEVICES

THIS APPLIES TO ALL DEVICES ON THIS PAGE

MEMORY SELECTION GUIDE (CONT)

FLEXIBLE DISKS

1

PART NUMBER	** ND	CC	†† RC	SIZE	SECTORS/TRACK	BYTES/SECTOR	TRACKS/SIDE	UNFORMATTED CAP KBYTES	FORMATTED CAP KBYTES	COMPATIBILITY
SINGLE SIDE/SINGLE DENSITY										
119-0848-00	A	K		8"	32 Hard	128	77	401	315.392	Non Standard Format
119-0967-00	A	K	4J	8"	26 Soft	128	77	401	246.272	IBM Standard Format
SINGLE SIDE/DOUBLE DENSITY										
119-1011-00	A	K+		8"	32 Hard	256	77	802	630.784	Non Standard Format
119-1376-00	A	K+		8"	Soft		77	802		IBM Standard Format
DOUBLE SIDE/DOUBLE DENSITY										
119-1182-00	A	L-		8"	Soft		77	1604		IBM Standard Format

SPECIAL PURPOSE

Alignment diskettes are available. Part numbers are not included because of dependence on disk drive compatibility.

THIS APPLIES TO ALL DEVICES ON THIS PAGE

†† CATALOG RELIABILITY CODES

USAGE/YR	CODE
≥10	1
≥100	2
≥1 000	3
≥10 000	4
≥100 000	5
≥1 000 000	6
≥10 000 000	7

FAILURE FREQ	CODE	%/YR (median)
1/100 000	A	.001
1/50 000	B	.002
1/20 000	C	.005
1/10 000	D	.01
1/5 000	E	.02
1/2 000	F	.05
1/1 000	G	.1
1/500	H	.2
1/200	I	.5
1/100	J	1.0+

For further explanation of this code, see page 4-72.

** NEW DESIGN RECOMMENDATION FROM COMPONENT ENGINEERING:

A = Acceptable
N = Not Recommended
U = Undefined
X = Do Not Use

COST CODE

(CC COLUMN)

CODE	≈ VALUE with -	≈ VALUE no suffix	≈ VALUE with +
A	.2¢	.5¢	.75¢
B	1.25¢	1.5¢	2¢
C	2.5¢	3¢	3.75¢
D	4.25¢	5¢	6¢
E	7¢	8¢	10¢
F	13¢	15¢	18¢
G	22¢	25¢	35¢
H	40¢	50¢	60¢
I	65¢	75¢	$1
J	$1.25	$1.50	$2
K	$2.50	$3	$3.75
L	$4.25	$5	$6
M	$7	$8	$10
N	$13	$15	$18
O	$22	$25	$35+

NOTE: Costs may vary from order to order due to order quantities, vendor, etc.

INTEGRATED CIRCUITS, DIGITAL CMOS

VENDOR NUMBER	PART NUMBER	** ND	CC	DESCRIPTION	OTHER	†† RC	CASE STYLE
ADDERS/COMPARATORS							
4008B	156-0502-02	A	I-	4-Bit Full Adder	Scrnd		16 DIP
4585B	156-0548-02	A	I	4-Bit Magnitude Comparator	Scrnd		16 DIP
BUFFERS/INVERTERS							
4009	156-0503-02	N	H-	Hex Inverting Buffer	Scrnd	3E	16 DIP
4010	156-0504-00	N	H-	Hex Non-Inverting Buffer		4F	16 DIP
4010	156-0504-01	N	H-	Hex Non-Inverting Buffer	Chkd		16 DIP
4010	156-0504-02	N	H-	Hex Non-Inverting Buffer	Scrnd		16 DIP
4049B	156-0494-02	A	H	Hex Inverting Buffer	Scrnd	4D	16 DIP
4050B	156-0330-02	A	H	Hex Non-Inverting Buffer	Scrnd		16 DIP
4069B	156-0745-01	A	G+	Hex Inverter	Scrnd		14 DIP
74C14	156-0876-00	N	H-	Hex Inverter, Schmitt Trig		3F	14 DIP
74C14	156-0876-01	A	H	Hex Inverter, Schmitt Trig	Chkd	3E	14 DIP
80C97	156-0649-00	N	G+	3-St Hex, Non-Inv. Buffer		3G	16 DIP
80C97	156-0649-02	A	H-	3-St Hex, Non-Inv. Buffer	Scrnd		16 DIP
80C98	156-1341-00	N	H-	3-St Hex, Inverting Buffer		3F	16 DIP
80C98	156-1341-01	A	H+	3-St Hex, Inverting Buffer	Scrnd		16 DIP
COUNTERS							
RDD104	156-1717-00	A		Divider, 4-Decade			8 DIP
4017B	156-0799-01	A	I-	Divider, Decade Counter	Scrnd		16 DIP
4018	156-0519-01	A	I-	Preset Div-By-N Counter	Scrnd		16 DIP
4020B	156-0895-01	A	I	14-Stage Ripple/Carry/ Divider/Counter	Scrnd	4E	16 DIP
4024B	156-0523-01	A	I	7-Stage Binary Counter	Scrnd		14 DIP
4040B	156-0545-01	A	I	12-Bit Binary Counter	Scrnd		16 DIP
4516B	156-0582-03	A	J-	Binary Up/Down Counter	Scrnd	4H	16 DIP
4518B	156-0752-01	A	I	Dual BCD Up Counter	Scrnd		16 DIP
4520B	156-0579-02	A	I-	Dual 4-Bit Binary Counter	Scrnd		16 DIP
4521	156-0864-00	A	J-	24-Stage Frequency Divider			16 DIP
4521	156-0864-01	A	J+	24-Stage Frequency Divider	Scrnd		16 DIP
4553B	156-0896-01	A	J	3-Digit BCD Counter	Scrnd	4E	16 DIP
7226B	156-1655-00	A	N-	Universal Counter System		2J	40 DIP
40103B	156-1568-00	A	I+	8-Bit Binary Down Counter	Scrnd		16 DIP
74HC160	156-1750-00	A		Programmable Counter	Scrnd		16 DIP
74HC161	156-1762-00	A		Programmable Counter	Scrnd		16 DIP
74C193	156-0627-00	N	I-	Syn 4-Bit Up/Dn Binry Cntr			16 DIP
74C193	156-0627-02	A	I	Syn 4-Bit Up/Dn Binry Cntr	Scrnd		16 DIP
DECODERS/MULTIPLEXERS							
4028B	156-0756-00	N	I-	BCD to Decimal Decoder		3H	16 DIP
4028B	156-0756-01	A	I	BCD to Decimal Decoder	Scrnd	3G	16 DIP
4511	156-0795-01	A	I	BCD to 7-Seg Ltch/Drv/Dcdr	Scrnd		16 DIP
4543B	156-1556-00	A	J-	BCD to 7-Seg Ltch/Drv/Dcdr	Scrnd		16 DIP
4555B	156-1368-00	A		Dual Bin 1 of 4 Dcdr/Demux			16 DIP
4556B	156-0898-01	A	H+	Dual Bin 1 of 4 Dcdr/Demux	Scrnd		16 DIP
74C42	156-0566-00	N	I	BCD to Decimal Decoder			16 DIP
74C42	156-0566-02	A	I+	BCD to Decimal Decoder	Scrnd		16 DIP
74C48	156-0886-00	N	H	BCD to 7-Segment Decoder		3G	16 DIP
74C48	156-0886-02	A	J-	BCD to 7-Segment Decoder	Scrnd		16 DIP
74C151	156-0869-00	N	J-	8-Chan Digital Multiplexrs			16 DIP
74C151	156-0869-01	A	J	8-Chan Digital Multiplexrs	Scrnd		16 DIP
74C157	156-0547-00	N	J-	Quad 2-Input Multiplexers			16 DIP
74C157	156-0547-03	A	J-	Quad 2-Input Multiplexers	Scrnd		16 DIP
DRIVERS							
4511	156-0795-01	A	I	BCD 7-Seg Dcdr/Ltch/Drvr	Scrnd		16 DIP
4543B	156-1556-00	A	J-	BCD 7-Seg Dcdr/Ltch/Drvr	Scrnd		16 DIP
7218A	156-1621-00	A	L+	8-Digit LED Driver System (Common Anode)	Scrnd		28 DIP
7218B	156-1622-00	A	L+	8-Digit LED Driver System (Common Cathode)	Scrnd		28 DIP
74C48	156-0886-00	A	H	BCD to 7-Seg. Decoder/Drvr		3G	16 DIP
74C912	156-1431-00	A	L-	6-Digit BCD Dsply Cntr/Drvr			28 DIP

VENDOR NUMBER	PART NUMBER	** ND	CC	DESCRIPTION	OTHER	†† RC	CASE STYLE
FLIP-FLOPS							
4013B	156-0366-03	A		Dual, D-Type Edge Triggrd	Scrnd		14 DIP
4027B	156-0525-03	A	H-	Dual, J-K Master/Slave	Scrnd	3H	16 DIP
74C107	156-0680-00	N	H	Dual, J-K w/Clear			14 DIP
74C107	156-0680-02	A	H+	Dual, J-K w/Clear	Scrnd		14 DIP
74C173	156-0574-02	A	I	3-State Quad D	Scrnd		16 DIP
74C174	156-0682-00	N	I+	Hex D		3F	16 DIP
74C174	156-0682-02	A	H	Hex D	Scrnd	3E	16 DIP
74C175	156-0931-00	N	H-	Quad D		3G	16 DIP
74C175	156-0931-01	A	I	Quad D	Scrnd		16 DIP
74C374	156-1327-00	A	I+	3-State Octal D	Scrnd	4E	20 DIP
74SC374	156-1646-00	A	K+	Octal, D-Type Edge Triggrd			20 DIP
GATES							
4001A	156-0349-00	N	G	Quad, 2-Input NOR		3I	14 DIP
4001B	156-0349-01	N	G+	Quad, 2-Input NOR		4D	14 DIP
4001A	156-0349-03	N	G+	Quad, 2-Input NOR	Scrnd	4F	14 DIP
4001B	156-0349-06	A	G	Quad, 2-Input NOR	Scrnd	4D	14 DIP
4002B	156-0754-00	N	G	Dual, 4-Input NOR		4E	14 DIP
4002B	156-0754-01	N	G	Dual, 4-Input NOR	Chkd	4E	14 DIP
4002B	156-0754-02	A	G+	Dual, 4-Input NOR	Scrnd		14 DIP
4011A	156-0350-00	N	F	Quad, 2-Input NAND		3I	14 DIP
4011B	156-0350-01	N	F-	Quad, 2-Input NAND			14 DIP
4011A	156-0350-02	N	G+	Quad, 2-Input NAND	Scrnd	4D	14 DIP
4011B	156-0350-05	A	G	Quad, 2-Input NAND	Scrnd		14 DIP
4012	156-0793-02	A	H-	Dual, 4-Input NAND	Scrnd		14 DIP
4019B	156-1352-00	A	H-	Quad, AND/OR Select	Scrnd		16 DIP
4023B	156-0524-00	N	G+	Triple, 3-Input NAND		3H	14 DIP
4023B	156-0524-02	A	H	Triple, 3-Input NAND	Scrnd		14 DIP
4025B	156-0575-03	A	H-	Triple, 3-Input NOR	Scrnd	4D	14 DIP
4070B	156-0786-02	A	H-	Quad, EX OR	Scrnd		14 DIP
4071B	156-1340-01	A	H-	Quad, 2-Input OR	Scrnd		14 DIP
4078	156-1320-00	A	G+	8-Input OR NOR	Scrnd		14 DIP
4081B	156-1478-00	A	G	Quad, 2-Input AND			14 DIP
4082B	156-1787-00	A	I	Dual, 4-Input AND			14 DIP
4086B	156-0753-00	N	H	Exp, 4-Wide, 2-Input AND/ OR Inv		2J	14 DIP
4093B	156-0961-00	N	H-	Quad, 2-Input NAND, Schmitt Trigger			14 DIP
4093B	156-0961-02	A	H	Quad, 2-Input NAND, Schmitt Trigger	Scrnd	4D	14 DIP
4572	156-0767-00	N	G	Hex, 4-Inv, 2-Inp NOR/NAND		4E	16 DIP
4572	156-0767-02	A	H-	Hex, 4-Inv, 2-Inp NOR/NAND	Scrnd		16 DIP
4519B	156-0505-00	N	G+	4-Bit AND/OR Selector			16 DIP
4519C	156-0505-02	A	H-	4-Bit AND/OR Selector Se.			16 DIP
74C00	156-0941-00	N	G	Quad, 2-Input NAND			14 DIP
74C00	156-0941-01	A	G	Quad, 2-Input NAND	Scrnd		14 DIP
74C08	156-0577-00	N	G	Quad, 2-Input AND			14 DIP
74C08	156-0577-02	A	G+	Quad, 2-Input AND	Scrnd		14 DIP
74C10	156-0938-00	N	G	Triple, 3-Input NAND			14 DIP
74C10	156-0938-01	A	G+	Triple, 3-Input NAND	Chkd		14 DIP
74C30	156-1397-00	A	H-	8-Input NAND	Scrnd		14 DIP
74C32	156-0766-00	N	G	Quad, 2-Input OR		4E	14 DIP
74C32	156-0766-02	A	H-	Quad, 2-Input OR, Ceram Pkg	Scrnd		14 DIP
GENERATORS							
4702	156-0850-02	A	L+	Programmable Bit Rate	Scrnd		16 DIP

THIS APPLIES TO ALL DEVICES ON THIS PAGE

INTEGRATED CIRCUITS,DIGITAL (CONT)
CMOS

1

VENDOR NUMBER	PART NUMBER	** ND	CC	DESCRIPTION	OTHER	†† RC	CASE STYLE
LATCHES							
4042	156-0800-01	A	H	Quad Latch	Scrnd		16 DIP
4508B	156-0897-00	A	K	Dual 4-Bit Latch			24 DIP
4511	156-0795-01	A	I	BCD to 7-Segment Decoder/ Driver/Latch	Chkd		16 DIP
4543B	156-1556-00	A	J-	BCD to 7-Segment Decoder/ Driver/Latch	Scrnd		16 DIP
74C373	156-1398-00	A	J-	3-State Octal D-Type			20 DIP
MEMORIES							
SEE MEMORY SELECTION GUIDE THIS SECTION							
MULTIVIBRATORS							
4528B	156-0578-02	A	I	Dual One Shot MV	Scrnd		16 DIP
4538B	156-1152-00	N	I	Dual Monostable MV		4E	
4538B	156-1152-01	A	I+	Dual Monoatable MV	Scrnd	4D	
74C221	156-0750-02	A	I+	Dual Monostable MV	Scrnd		16 DIP
SHIFT REGISTERS							
4006B	156-0681-02	A	J+	18-Stage Static	Scrnd		14 DIP
4014B	156-0568-00	N	H+	8-Stage Synchronous Parall Input/Serial Output			16 DIP
4014B	156-0568-01	A	I+	8-Stage Synchronous Parall Input/Serial Output	Scrnd		16 DIP
4015B	156-0801-01	A	I	Dual 4-Stage Serial Input/ Parallel Output	Scrnd		16 DIP
4021B	156-0576-02	A	I	8-Stage Asynchronous Parall Input/Serial Output	Scrnd		16 DIP
4035B	156-0580-02	A	I-	4-Bit Parallel Input/ Parallel Output	Scrnd		16 DIP
4094B	156-0796-00	N	I	8-Stage Shift and Store Bus Register		4D	16 DIP
4094B	156-0796-01	A	I+	8-Stage Shift and Store Bus Register	Scrnd	4D	16 DIP
74C164	156-0572-02	A	I+	8-Bit Serial Input/Parallel Output w/Clear	Scrnd		14 DIP
74C165	156-0625-01	A	J-	8-Bit Parallel Input	Scrnd		16 DIP
MISCELLANEOUS							
CDP1857D	156-1279-00	A	N	Bus/Buffer Separator 4-Bit, 3-State Output			16 DIP
4490	156-0763-00	A	J-	Hex Contact Bouncd Elimntr		3E	16 DIP
4490	156-0763-01	N	J-	Hex Contact Bouncd Elimntr	Chkd		16 DIP
4490	156-0763-02	A	J-	Hex Contact Bouncd Elimntr	Scrnd		16 DIP
4512B	156-1486-00	A	I	8-Channel Data Selector	Scrnd		16 DIP
4532	156-1282-00	A	I	8-Bit Encoder			16 DIP
4559B	156-0583-02	N	K-	Successive Approx Register	Scrnd		16 DIP
5369	156-1337-00	A	I-	17-Stage Prgmbl OSC/Driver	Scrnd		8 DIP
6993	156-1115-00	N	O+	Sync Generator			24 DIP
7213	156-1274-00	A	K-	Crystal Oscillator/Divider			14 DIP
40115	156-1319-00	A	M	8-Bit BiDirect CMOS/TTL Interface Level Controller		1J	22 DIP
74C911	156-1430-00	A	L+	4-Digit Expandable Segment Display Controller			28 DIP
74C923	156-1215-00	N	K-	20 Key Encoder			20 DIP
74C923	156-1215-01	A	K	20 Key Encoder	Scrnd	3G	20 DIP

** NEW DESIGN RECOMMENDATION FROM COMPONENT ENGINEERING

A = Acceptable
N = Not Recommended

†† CATALOG RELIABILITY CODES

USAGE/YR	CODE
≥10	1
≥100	2
≥1 000	3
≥10 000	4
≥100 000	5
≥1 000 000	6
≥10 000 000	7

FAILURE FREQ	CODE		%/YR (median)
1/100 000	A	=	.001
1/50 000	B	=	.002
1/20 000	C	=	.005
1/10 000	D	=	.01
1/5 000	E	=	.02
1/2 000	F	=	.05
1/1 000	G	=	.1
1/500	H	=	.2
1/200	I	=	.5
1/100	J	=	1.0+

For further explanation of this code, see page 4-72.

COST CODE
(CC COLUMN)

CODE	≈ VALUE with -	≈ VALUE no suffix	≈ VALUE with +
A	.2¢	.5¢	.75¢
B	1.25¢	1.5¢	2¢
C	2.5¢	3¢	3.75¢
D	4.25¢	5¢	6¢
E	7¢	8¢	10¢
F	13¢	15¢	18¢
G	22¢	25¢	35¢
H	40¢	50¢	60¢
I	65¢	75¢	$1
J	$1.25	$1.50	$2
K	$2.50	$3	$3.75
L	$4.25	$5	$6
M	$7	$8	$10
N	$13	$15	$18
O	$22	$25	$35+

NOTE: Costs may vary from order to order due to order quantities, vendor, etc.

ATTENTION
OBSERVE PRECAUTIONS FOR HANDLING
ELECTROSTATIC SENSITIVE DEVICES

THIS APPLIES TO ALL DEVICES ON THIS PAGE.

ATTENTION
OBSERVE PRECAUTIONS FOR HANDLING
ELECTROSTATIC SENSITIVE DEVICES

INTEGRATED CIRCUITS, DIGITAL (CONT)
ECL

THIS APPLIES TO ALL DEVICES ON THIS PAGE.

VENDOR NUMBER	PART NUMBER	** ND	CC	DESCRIPTION	OTHER	†† RC	CASE STYLE
ADDERS							
100180	156-1508-00	A	N-	6-Bit			24 DIP
100180FC	156-1507-00	A	N-	6-Bit			Flt Pk
10181	156-0863-00	A	L	Alu			24 DIP
10181	156-0863-01	A	L	Alu	Scrnd		24 DIP
BUFFERS/INVERTERS							
10188	156-0543-00	A	I	Hex Buffer			16 DIP
10188	156-0543-01	A	I+	Hex Buffer	Scrnd	4E	16 DIP
10189	156-0542-00	A	I-	Hex Inverter			16 DIP
10189	156-0542-01	A	I+	Hex Inverter	Scrnd		16 DIP
10195	156-0630-00	A	I	Hex Inverter/Buffer			16 DIP
10195	156-0630-01	A	I+	Hex Inverter/Buffer	Scrnd		16 DIP
100122	156-1516-00	A	L-	9-Bit Buffer			24 DIP
100122FC	156-1515-00	A	L+	9-Bit Buffer			Flt Pk
COMPARATORS							
1651	156-0705-00	A	M	Dual A/D			16 DIP
10166	156-1023-01	A	J+	5-Bit Magnitude	Scrnd		16 DIP
100166	156-1505-00	A	M	9-Bit			24 DIP
10124	156-0368-00	A	I	Quad TTL to ECL		3H	16 DIP
10124	156-0368-01	A	J+	Quad TTL to ECL	Scrnd		16 DIP
10124	156-0368-02	A	I	Quad TTL to ECL			16 DIP
10124	156-0368-03	A	I+	Quad TTL to ECL	Scrnd		16 DIP
CONVERTORS							
10125	156-0316-00	A	H+	Quad 2-Input ECL to TTL		3F	16 DIP
10125	156-0316-02	A	I	Quad 2-Input ECL to TTL, Ceramic Pkg only			16 DIP
10125	156-0316-03	A	I	Quad 2-Input ECL to TTL	Scrnd		16 DIP
10125	156-0316-04	A	I+	Quad 2-Input ECL to TTL	Scrnd		16 DIP
COUNTERS							
10010	156-0870-00	A	K	BDC Decade			16 DIP
10010	156-0870-01	A	K	BDC Decade	Scrnd	3F	16 DIP
10016	156-1038-00	A	K-	Binary Counter		3H	16 DIP
10016	156-1038-01	A	K-	Binary Counter	Scrnd	4D	16 DIP
10136	156-0641-00	A	K	Universal Hexadecimal		3G	16 DIP
10136	156-0641-01	A	K	Universal Hexadecimal	Scrnd		16 DIP
10138	156-0642-00	A	J+	Bi-Quinary			16 DIP
10138	156-0642-01	A	K-	Bi-Quinary	Scrnd		16 DIP
100136FC	156-1563-00	A	O	4-Stage Counter/Shift Reg.			Flt Pk
DECODERS/MULTIPLEXERS							
10134	156-1020-00	A	I	Dual Mux w/Latch			16 DIP
10158	156-0746-00	A	J-	Quad 2-Input Non-Invt Mux			16 DIP
10158	156-0746-01	A	J+	Quad 2-Input Non-Invt Mux	Scrnd		16 DIP
10159	156-1796-00	A	I+	Multiplexer	Scrnd		16 DIP
10161	156-0920-00	A	J-	Binary to 1-8			16 DIP
10161	156-0920-01	A	J-	Binary to 1-8	Scrnd		16 DIP
10162	156-1495-00	A	I	1 of 8 (Active High Input)			16 DIP
10164	156-0640-00	A	I+	8-Line Multiplexer		2I	16 DIP
10164	156-0640-01	A		8-Line Multiplexer			16 DIP
10164	156-0640-02	A	J	8-Line Multiplexer	Scrnd		16 DIP
10H164	156-1667-00	A	J	Dual 8-Line Multiplexer	Scrnd		16 DIP
10171	156-1538-00	A	I	Dual 1-of-4 Decoder/Demux			16 DIP
10172	156-0758-00	A	I+	Dual Binary to 1-4			16 DIP
10172	156-0758-01	A	J-	Dual Binary to 1-4	Scrnd		16 DIP
10174	156-0637-00	A	I+	Dual 4-1 Multiplexer			16 DIP
10174	156-0637-01	A	J-	Dual 4-1 Multiplexer	Scrnd		16 DIP
10H174	156-1795-00	A	I+	Dual 4-1 Multiplexer	Scrnd		
100155FC	156-1496-00	A	M+	Quad Mux w/Latch			Flt Pk
100155	156-1510-00	A	M	Quad Mux w/Latch			24 DIP
100164FC	156-1085-00	A	M	Multiplexer, 16-Input			Flt Pk
100164FC	156-1085-02	A		Multiplexer, 16 Input			24 DIP
100163	156-1557-00	A	N-	Dual 8-Input Mux	Scrnd		Flt Pk
100170	156-1554-00	A	M+	Univ Demux/Decoder			24 DIP
100170FC	156-1504-00	A	M	Univ Demux/Decoder			Flt Pk
100171	156-1509-00	A	L+	Triple 4-Input Mux w/Enable			24 DIP
100171FC	156-1502-00	A	M-	Triple 4-Input Mux w/Enable			Flt Pk

VENDOR NUMBER	PART NUMBER	** ND	CC	DESCRIPTION	OTHER	†† RC	CASE STYLE
FLIP-FLOPS							
11C06	156-0377-00	A	L+	D-Type M-S (650 MHz)			16 DIP
1670L	156-0228-00	A	N+	D-Type M-S (275 MHz)		4G	16 DIP
10131	156-0230-00	A	H+	Dual D-Type M-S (150 MHz)		4G	16 DIP
10131	156-0230-02	A	I	Dual D-Type M-S (150 MHz)	Scrnd		16 DIP
10H131	156-1639-00	A	I+	Dual D-Type M-S (250 MHz)			16 DIP
10H131	156-1639-01	A	I+	Dual D-Type M-S (250 MHz)	Scrnd		16 DIP
10135L	156-0688-00	A	I+	Dual J-K, Master/Slave			16 DIP
10135L	156-0688-01	A	I+	Dual J-K, Master/Slave	Scrnd	4D	16 DIP
10176	156-0633-00	A	J	Hex D-Type, Master/Slave			16 DIP
10176	156-0633-01	A	J+	Hex D-Type, Master/Slave	Scrnd		16 DIP
10176	156-0633-02	A	J+	Hex D-Type, Master/Slave	Scrnd		16 DIP
101H176	156-1712-00	A	J+	Hex D-Type, Master/Slave	Scrnd		16 DIP
10186	156-0743-00	A	K	Hex D-Type, M-S w/Reset		3D	16 DIP
10186	156-0743-01	A	K+	Hex D-Type, M-S w/Reset	Scrnd		16 DIP
10231	156-0880-00	A	J	Dual D-Type M-S (225 MHz)		3F	16 DIP
10231	156-0880-02	A	J	Dual D-Type M-S (225 MHz)	Scrnd	4E	16 DIP
10231	156-0880-03	A	L	Dual D-Type M-S, Ceramic Pk	Scrnd		16 DIP
100131FC	156-1031-00	A	M-	Triple D-Type		4C	Flt Pk
100151	156-1512-00	A	M	Hex D-Type			24 DIP
100151FC	156-1501-00	A	M+	Hex D-Type			Flt Pk
GATES							
11C01/ 1688	156-1650-00	A	M	Dual 5-4-Input OR/NOR			Flt Pk
1660L	156-0282-00	A	K	Dual 4-Input OR/NOR		3H	16 DIP
1660L	156-0282-01	A	K	Dual 4-Input OR/NOR, Ceramic Pkg only		3H	16 DIP
1660L	156-0282-02	A	K	Dual 4-Input OR/NOR	Scrnd		16 DIP
1662L	156-0226-00	A	K	Quad 2-Input NOR		4G	16 DIP
1662L	156-0226-02	A	K+	Quad 2-Input NOR	Scrnd	2J	16 DIP
1663L	156-0348-00	A	K+	Quad 2-Input NOR 2K Inputs			16 DIP
1664L	156-0227-00	A	K	Quad 2-Input OR		2J	16 DIP
1664L	156-0227-01	A	K+	Quad 2-Input OR	Scrnd		16 DIP
1672L	156-0353-00	A	K+	Triple 2-Input EX/OR			16 DIP
10100	156-1287-00	A	G-	Quad 2-Input NOR w/Strobe			16 DIP
10101	156-0631-00	A	G-	Quad 2-Input Common OR/NOR			16 DIP
10101	156-0631-01	A	G+	Quad 2-Input Common OR/NOR			16 DIP
10101	156-0631-02	A	H	Quad 2-Input Common OR/NOR	Scrnd	4E	16 DIP
10101	156-0631-03	A	H	Quad 2-Input Common OR/NOR	Scrnd		16 DIP
10H101	156-1733-00	A	H+	Quad OR/NOR	Scrnd		16 DIP
10H101	156-1668-00	A	H+	Quad OR/NOR	Scrnd		16 DIP
10102	156-0205-00	A	G	Quad 2-Input NOR		5E	16 DIP
10102	156-0205-02	A	H-	Quad 2-Input NOR	Scrnd		16 DIP
10H102	156-1641-00	A	G	Quad 2-Input AND			16 DIP
10H102	156-1641-01	A	H+	Quad 2-Input AND	Scrnd		16 DIP
10103	156-0759-00	A	G	Quad 2-Input OR	Scrnd		16 DIP
10103	156-0759-02	A	H-	Quad 2-Input OR	Scrnd		16 DIP
10104	156-0458-00	A	G	2-Input Quad AND		3G	16 DIP
10104	156-0458-01	A	H-	2-Input Quad AND	Scrnd		16 DIP
10H104	156-1674-00	A	H+	Quad 2-Input AND			16 DIP
10105	156-0182-00	A	G	Triple 2-3-2 Input OR/NOR		4E	16 DIP
10105	156-0182-01	A	G	Triple 2-3-2 Input OR/NOR	Scrnd		16 DIP
10105	156-0182-02	A	H-	Triple 2-3-2 Input OR/NOR	Scrnd	4D	16 DIP
10H105	156-1642-00	A	G+	Triple 2-3-2 Input OR/NOR			16 DIP
10H105	156-1642-01	A	H+	Triple 2-3-2 Input OR/NOR	Scrnd		16 DIP
10106	156-0252-00	A	G	Triple 4-3-3 Input NOR			16 DIP
10106	156-0252-02	A	H	Triple 4-3-3 Input NOR	Scrnd		16 DIP
10107	156-0295-00	A	G	Triple 2-Input EX OR/NOR		3F	16 DIP
10107	156-0295-02	A	H	Triple 2-Input EX OR/NOR	Scrnd		16 DIP
10H107	156-1676-00	A	H+	Triple 2-Input EX OR/NOR	Scrnd		16 DIP
10109	156-0229-00	A	G	Dual 4-5 Input OR/NOR		2I	16 DIP
10109	156-0229-01	A	I-	Dual 4-5 Input OR/NOR	Scrnd		16 DIP
10H109	156-1682-00	A	H+	Dual 4-5 Input OR/NOR	Scrnd		16 DIP
10110	156-0639-00	A	G	Dual 3-Input, 3-Output, OR			16 DIP
10110	156-0639-01	A	H	Dual 3-Input, 3-Output, OR	Scrnd		16 DIP
10111	156-0636-00	A	H-	Dual 3-Input, 3-Output, NOR			16 DIP
10113	156-0687-00	A	G+	Quad, EX OR			16 DIP
10113	156-0687-01	A	H	Quad, EX OR	Scrnd		16 DIP
10H117	156-1710-00	A	H+	Dual, 2-Wd, 2-3 Inp OR/AND	Scrnd		16 DIP
10118	156-1214-01	A	H	Dual, 2 Wd, 3 Input OR/AND	Scrnd		16 DIP

1

INTEGRATED CIRCUITS, DIGITAL (CONT)
ECL

1

GATES (CONT)

VENDOR NUMBER	PART NUMBER	** ND	CC	DESCRIPTION	OTHER	†† RC	CASE STYLE
10197	156-1021-00	A	I	Hex and Gate			16 DIP
10197	156-1021-01	A	I+	Hex and Gate	Scrnd		16 DIP
10210	156-1019-02	A	I+	HS Dual 3-Inp, 3-Output, OR	Scrnd		16 DIP
10H210	156-1711-00	A		Dual 3-Inp, 3-Outp, OR	Scrnd		16 DIP
10211	156-0757-00	A	H+	HS Dual 3-Inp, 3-Outp, NOR			16 DIP
10211	156-0757-01	A	I-	HS Dual 3-Inp, 3-Outp, NOR	Scrnd		16 DIP
10212	156-0848-00	A	H	HS Dl 3-Inp, 3-Outp OR/NOR			16 DIP
10212	156-0848-01	A	I-	HS Dl 3-Inp, 3-Outp OR/NOR	Scrnd		16 DIP
100101	156-1520-00	A	K+	Triple 5-Input OR/NOR			24 DIP
100101FC	156-1034-00	A	K+	Triple 5-Input OR/NOR			Flt Pk
100101FC	156-1034-01	A		Triple 5-Input OR/NOR	Scrnd		Flt Pk
100101FC	156-1034-02	A	L-	Triple 5-Input OR/NOR	Chkd		Flt Pk
100102	156-1519-00	A	K	Quint OR/NOR			24 DIP
100102FC	156-1032-00	A	K+	Quint OR/NOR		4D	Flt Pk
100102FC	156-1032-02	A	L-	Quint OR/NOR	Chkd		Flt Pk
100107	156-1518-00	A	L	Quint EXCL OR/NOR			24 DIP
100107FC	156-1500-00	A	L	Quint EXCL OR/NOR			Flt Pk
100112FC	156-1499-00	A	L+	Quad Fan Out OR/NOR			Flt Pk
100112FC	156-1499-01	A		Quad Fan Out OR/NOR			24 DIP
100117FC	156-1498-00	A	L	Triple 2-Wide AO/AOI			Flt Pk

GENERATORS

VENDOR NUMBER	PART NUMBER	** ND	CC	DESCRIPTION	OTHER	†† RC	CASE STYLE
100160	156-1506-00	A	M	Dual Parity Chkr/Generator		2J	24 DIP

LATCHES

VENDOR NUMBER	PART NUMBER	** ND	CC	DESCRIPTION	OTHER	†† RC	CASE STYLE
1668L	156-0343-00	A	L+	Dual Clocked			16 DIP
10130	156-1247-00	A	H	Dual Clocked, D-Type			16 DIP
10130	156-1247-01	A	I	Dual Clocked, D-Type	Scrnd		16 DIP
10133	156-0520-00	A	J	Quad Latch D-Type Neg Clock			16 DIP
10133	156-0520-01	A	L+	Quad Ltch D-Type Neg Clock	Scrnd		16 DIP
10173	156-0632-00	A	I+	Quad 2-Input Mux/Latch			16 DIP
10173	156-0632-01	A		Quad 2-Input Mux/Latch	Chkd		16 DIP
10173	156-0632-02	A	J-	Quad 2-Input Mux/Latch	Scrnd		16 DIP
10175	156-0760-01	A	K+	Quint Latch, D-Type	Scrnd		16 DIP
100150	156-1581-00	A	M	Hex D Latch			24 DIP
100150FC	156-1497-00	A	M	Hex Latch			Flt Pk

RECEIVERS

VENDOR NUMBER	PART NUMBER	** ND	CC	DESCRIPTION	OTHER	†† RC	CASE STYLE
1692L	156-0307-00	A	K	Quad Diff Line			16 DIP
1692L	156-0307-01	A	K	Quad Diff Line	Scrnd		16 DIP
10115	156-0308-00	A	G	Quad Diff Line			16 DIP
10115	156-0308-02	A	G+	Quad Diff Line, Ceramic Pkg		3F	16 DIP
10115	156-0308-03	A	H	Quad Diff Line	Scrnd		16 DIP
10115	156-0308-04	A	G	Quad Diff Line	Scrnd		16 DIP
10116	156-0860-00	A	G+	Triple Line		4E	16 DIP
10116	156-0860-02	A	H	Triple Line	Scrnd		16 DIP
10H116	156-1640-00	A	H-	Triple Line			16 DIP
10H116	156-1640-01	A	H+	Triple Line			16 DIP
10H116	156-1698-00	N	H-	Triple Line, DIE			
10192	156-1309-00	A	K-	Quad Line	Scrnd	2J	16 DIP
10216	156-0369-00	A	H	HS Triple Line		4F	16 DIP
10216	156-0369-01	A	H+	HS Triple Line, Ceramic Pkg			16 DIP
10216	156-0369-02	A	H+	HS Triple Line	Scrnd	4E	16 DIP
10216	156-0369-03	A	H+	HS Triple Line	Scrnd	4D	16 DIP
100114FC	156-1033-00	A	K+	Quint Diff Line		3F	Flt Pk

REGISTERS

VENDOR NUMBER	PART NUMBER	** ND	CC	DESCRIPTION	OTHER	†† RC	CASE STYLE
10141	156-0638-00	A	K	4-Bit Universal Shift		2F	16 DIP
10141	156-0638-01	A	J+	4-Bit Universal Shift	Scrnd		16 DIP
100136	156-1517-00	A	N+	4-Stage Counter Shift			24 DIP
100136FC	156-1563-00	A	O	4-Stage Cntr/Shift Register			Flt Pk
100141	156-1511-00	A	N-	8-Bit Serial			24 DIP
100141FC	156-1030-00	A	N-	8-Bit			Flt Pk
100141FC	156-1030-02	A	N-	8-Bit	Chkd		Flt Pk
100145	156-1514-00	A	N-	16 x 4 Read/Write			24 DIP
100145FC	156-1513-00	A	N	16 x 4 Read/Write			Flt Pk

MISCELLANEOUS

VENDOR NUMBER	PART NUMBER	** ND	CC	DESCRIPTION	OTHER	†† RC	CASE STYLE
1648P	156-0266-00	A	J	Voltage Contrld Oscillator		3H	14 DIP
1648P	156-0266-01	A	J	Voltage Contrld Oscillator	Scrnd		14 DIP
1658	156-0224-00	A	K-	Voltage Contr Multivibrator			16 DIP
1658	156-0224-01	A	K	Voltage Contr Multivibrator	Scrnd		16 DIP
1697	156-0923-00	A	M-	Prescaler, ÷ 4 at 1 GHz			16 DIP
8610	156-1302-01	A	O+	Prescaler, ÷ 4 at 1.5 GHz			14 DIP
8627	156-1449-00	A	K	Prescaler, ÷ 80 at 150 MHz			8 DIP
8629	156-1248-00	A	K	Prescaler, ÷ 100			8 DIP
8647	156-1739-00	A	M	Driver, Hi Speed			
10H121	156-1794-00	A	H+	Hi Speed Emitter Cntr Logic			16 DIP
10123	156-1592-00	A	H	Driver, 4-3-3 NOR Bus			16 DIP
10160	156-0771-00	A	I+	14-Bit Parity Gen/Checker			16 DIP
10160	156-0771-01	A	J-	14-Bit Parity Gen/Checker	Scrnd		16 DIP
10165	156-1022-00	A	J-	8-Bit Priority Encoder			16 DIP
10165	156-1022-01	A	J	8-Bit Priority Encoder	Scrnd		16 DIP
10194	156-1657-00	A	J+	Dual Simul Bus Transmitter	Scrnd		16 DIP
10198	156-1713-00	A	K-	Retrig Monostab Multivibr			16 DIP
12040L	156-0518-00	A	L	Phase-Freq. Detector			14 DIP
12061	156-0624-00	A	K-	Crystal Oscillator			16 DIP
100112F	156-1797-00	A		Driver, Quad Line			24 DIP
100118	156-1561-00	A	L+	5-Wide AO/AOI	Scrnd		Flt Pk
100124	156-1671-00	A	L+	Hex TTL to ECL Translator			24 DIP
100125	156-1670-00	A	L	Hex ECL to TTL Translator			24 DIP
100165	156-1678-00	A	M+	Univ. Priority Encoder			24 DIP

PROMS

SEE MEMORY SELECTION GUIDE THIS SECTION

RAMS

SEE MEMORY SELECTION GUIDE THIS SECTION

ATTENTION
OBSERVE PRECAUTIONS FOR HANDLING
ELECTROSTATIC SENSITIVE DEVICES

THIS APPLIES TO ALL DEVICES ON THIS PAGE.

†† CATALOG RELIABILITY CODES

USAGE/YR	CODE
≥ 10	1
≥ 100	2
≥ 1 000	3
≥ 10 000	4
≥ 100 000	5
≥ 1 000 000	6
≥ 10 000 000	7

FAILURE FREQ	CODE		%/YR (median)
1/100 000	A	=	.001
1/50 000	B	=	.002
1/20 000	C	=	.005
1/10 000	D	=	.01
1/5 000	E	=	.02
1/2 000	F	=	.05
1/1 000	G	=	.1
1/500	H	=	.2
1/200	I	=	.5
1/100	J	=	1.0+

For further explanation of this code, see page 4-72.

** NEW DESIGN CODE FROM COMPONENT ENGINEERING:
A = Acceptable
N = Not Recommended

INTEGRATED CIRCUITS, DIGITAL (CONT)
MOS

VENDOR NUMBER	PART NUMBER	** ND	CC	DESCRIPTION	OTHER	†† RC	CASE STYLE
CLOCK DRIVERS							
0026	156-0328-00	A	I+	Dual Clock Driver (5 MHz)	Scrnd		8 DIP
3460L	156-0634-00	A	J+	4-Channel Gate Controlled			16 DIP
COUNTERS							
3814	156-0306-00	A	M-	4.5 Decade		3G	24 DIP
5007P	156-0409-00	A	M+	4 Decade		3G	16 DIP
5009P	156-0410-00	A	M-	Time Base		3E	16 DIP
EPROMS							
SEE MEMORY SELECTION GUIDE THIS SECTION							
PROMS							
SEE MEMORY SELECTION GUIDE THIS SECTION							
RAMS							
SEE MEMORY SELECTION GUIDE THIS SECTION							
SHIFT REGISTERS							
2802	156-0329-00	A	J-	Quad, 256 Bit Dynamic			16 DIP
2857	156-1039-00	N	K	512 Bit Static		5B	8 DIP
2857	156-1039-01	N	K	512 Bit Static	Scrnd		8 DIP
MISCELLANEOUS							
KEF11-A	156-1624-00	N	O+	Floating Point Arithmetic Processor			40 DIP
3341A	156-1346-00	A	K	64 x 4 FIFO	Scrnd		16 DIP
3853	156-1241-00	N	N-	Static Memory Interface			40 DIP
5321	156-0946-00	A	K+	TV Camera Sync Generator		3G	16 DIP
5837	156-1433-00	A	I-	Digital Noise Source			8 DIP
6844	156-1458-00	A	N+	DMA Controller			40 DIP
6844	156-1458-01	A		DMA Controller	Scrnd		40 DIP
Z8038	156-1793-00	A		FIFO Interface Controller			
D8087	156-1643-00	A	O+	Numeric Processor Entension			40 DIP
8275	156-1455-00	A	O-	Programmable CRT Controller			

COST CODE
(CC COLUMN)

CODE	≈ VALUE with -	≈ VALUE no suffix	≈ VALUE with +
A	.2¢	.5¢	.75¢
B	1.25¢	1.5¢	2¢
C	2.5¢	3¢	3.75¢
D	4.25¢	5¢	6¢
E	7¢	8¢	10¢
F	13¢	15¢	18¢
G	22¢	25¢	35¢
H	40¢	50¢	60¢
I	65¢	75¢	$1
J	$1.25	$1.50	$2
K	$2.50	$3	$3.75
L	$4.25	$5	$6
M	$7	$8	$10
N	$13	$15	$18
O	$22	$25	$35+

NOTE: Costs may vary from order to order due to order quantities, vendor, etc.

The familiar "lightning bolt" symbol used to denote electrostatic discharge hazard has been replaced with a "reaching hand" as the official notice for electrostatic-sensitive devices. The reaching hand symbol represents the danger to ESD-sensitive devices from handling by an unprotected worker. The use of this new symbol is noted in EIA Standard RS-471. The lightning bolt, associated with electrical hazards to life, was not acceptable on an international basis.

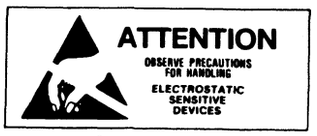

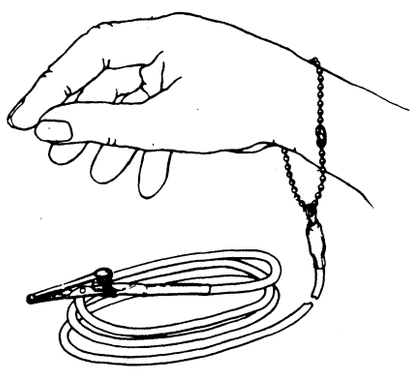

Wrist strap for use in handling static sensitive parts (hand not included)

006-2404-00 Conductive Fabric or Conductive Plastic
006-2404-01 Adj. Beaded Chain w/270K Resistor in Series w/Gnd.

For further information call Glenn Johnson ext. 4183

DESOLDERING TOOLS-STATIC CHARGE

TOOL	CHARGE LEVEL RETAINED ON TOOL: Immediate charge	Charge after time	
Silverstat Soldapullt	0V	0V	After five minutes
Deluxe Soldapullt	3kV	300-400V	After five minutes
Standard Soldapullt	20kV	10kV	After five minutes
Bulb Solder Sucker	10kV	4kV	After five minutes
Solder-Wick	*2kV	0V	After one minute

*Charge was retained due to solder-wick's plastic reel

Some circuit board components are sensitive to static charge. Also, some desoldering tools create a static charge. In order to identify and preclude potential problems, we have tested the various desoldering tools available for use at Tek.

A circuit board was used, with components removed, to determine static levels. Each device was tested ten times. The desoldering tools were checked for immediate charge retention and for the charge held after five minutes.

Each of the tools except the Silverstat Soldapullt, left a static charge on the circuit board and retained a charge (see chart). The Silverstat Soldapullt, a model with a metallized surface, left no charge and also retained no charge. Therefore, it is the preferred tool. It has been assigned part number 003-0795-00.

For more information on these desoldering tools, contact Herb Zajac, ext. 4759.

INTEGRATED CIRCUITS, DIGITAL (CONT)

TTL

FOR LISTING BY FAMILY NUMBERS, SEE PAGES 1-22 THRU 1-25.

1

ADDERS/COMPARATORS

VENDOR NUMBER	PART NUMBER	** ND	CC	DESCRIPTION	OTHER	†† RC	CASE STYLE
7483	156-0087-00	N	G+	4-Bit, Full Adder		4F	16 DIP
7483	156-0087-01	N	G+	4-Bit, Full Adder	Chkd		16 DIP
7483	156-0087-02	N	G+	4-Bit, Full Adder	Scrnd		16 DIP
7485	156-0123-00	N	G+	4-Bit, Magnitude Comparator		4F	16 DIP
7485	156-0123-01	N	G+	4-Bit, Magnitude Comparator	Chkd		16 DIP
7485	156-0123-02	N	H-	4-Bit, Magnitude Comparator	Scrnd		16 DIP
74S85	156-1041-02	A	I-	4-Bit, Magnitude Comparator	Scrnd		16 DIP
74LS85	156-0953-02	A	H	4-Bit, Magnitude Comparator	Scrnd	4C	16 DIP
74F283	156-1705-00	U	J-	4-Bit Binary Adder	Scrnd		16 DIP
74S283	156-1292-00	A	K-	4-Bit Binary Adder			16 DIP
74S283	156-1292-01	N	J+	4-Bit Binary Adder	Scrnd		16 DIP
74LS283	156-0679-01	A	H	4-Bit Binary Adder	Scrnd		16 DIP
9304	156-0148-00	N	G+	Dual Full Adder		3E	16 DIP
9304	156-0148-02	N	H-	Dual Full Adder	Scrnd		16 DIP
93S47	156-1063-01	A	J	6-Bit Identify Comparator	Scrnd		16 DIP
25LS2521	156-1273-01	A	J+	8-Bit Equal to Comparator	Scrnd		20 DIP

ARITHMETIC LOGIC UNITS

VENDOR NUMBER	PART NUMBER	ND	CC	DESCRIPTION	OTHER	RC	CASE STYLE
74181	156-0351-01	N	I+	ALU	Scrnd		24 DIP
74LS181	156-1376-00	A	J-	ALU	Scrnd		24 DIP
74S381	156-0691-00	N	K-	ALU			20 DIP
74AS881	156-1703-00	U	M-	ALU	Scrnd		24 DIP

BUFFERS/INVERTERS

VENDOR NUMBER	PART NUMBER	ND	CC	DESCRIPTION	OTHER	RC	CASE STYLE
54F04	156-1616-00	N	K+	Hex Inverter (Die Only)			14 DIP
7404	156-0058-02	N	G	Hex Inverter	Scrnd		14 DIP
7404J	156-0552-00	N	F+	Hex Inverter			14 DIP
7404J	156-0552-01	N	F+	Hex Inverter	Chkd		14 DIP
74F04	156-1722-00	U	H-	Hex Inverter	Scrnd		14 DIP
74S04	156-0323-02	A	G+	Hex Inverter	Scrnd	5B	14 DIP
74LS04	156-0385-02	A	G	Hex Inverter	Scrnd	5A	14 DIP
7405	156-0092-00	N	F+	Hex Inverter w/OC Outputs			14 DIP
7505	156-0092-01	N	G	Hex Inverter w/OC Outputs	Chkd		14 DIP
7405	156-0092-02	N	G	Hex Inverter w/OC Outputs	Scrnd		14 DIP
74H05	156-0922-02	N	H	Hex Inverter w/OC Outputs	Scrnd		14 DIP
74S05	156-0403-02	A	G	Hex Inverter w/OC Outputs	Scrnd		14 DIP
74LS05	156-0724-02	A	G	Hex Inverter w/OC Outputs	Scrnd	4D	14 DIP
7406	156-0153-01	N	G	Hex Inverter Buffer/Driver w/OC Outputs	Chkd		14 DIP
7406	156-0153-02	N	G+	Hex Inverter Buffer/Driver w/OC Outputs	Scrnd	4C	14 DIP
7406J	156-0611-02	N	H-	Hex Inverter	Scrnd		14 DIP
7407	156-1080-01	N	G	Hex Buffer w/OC HV Outputs	Scrnd		14 DIP
7414	156-0462-02	N	G+	Hex Inv, Schmitt Trigger	Scrnd		14 DIP
74LS14	156-0645-02	A	H	Hex Inv, Schmitt Trigger	Scrnd	4D	14 DIP
7416	156-0093-02	N	G-	Hex Buffer w/OC Outputs	Scrnd		14 DIP
7416J	156-0585-00	N	G	Hex Buffer w/OC Outputs			14 DIP
7416J	156-0585-01	N	G	Hex Buffer w/OC Outputs	Chkd		14 DIP
7417	156-0140-02	N	G	Hex Buffer w/OC HV Outputs	Scrnd		14 DIP
7417J	156-0589-00	N	H-	Hex Buffer w/OC HV Outputs			14 DIP
7417J	156-0589-01	N	H-	Hex Buffer w/OC HV Outputs	Chkd		14 DIP
7428	156-0374-02	N	G	Quad 2-Input NOR Buffer	Scrnd		14 DIP
7433	156-0424-02	N	G	Quad 2-Input NOR Buffer w/OC Outputs	Scrnd		14 DIP
74LS33	156-0730-02	A	G	Quad 2-Input NOR Buffer w/OC Outputs	Scrnd		14 DIP
7437	156-0150-00	N	F+	Quad 2-Input NAND Buffer			14 DIP
7437	156-0150-01	N	F+	Quad 2-Input NAND Buffer	Chkd	4G	14 DIP
7437	156-0150-02	N	G-	Quad 2-Input NAND Buffer	Scrnd		14 DIP
7437J	156-0591-00	N	G-	Quad 2-Input NAND Buffer			14 DIP
7437J	156-0591-01	N	G-	Quad 2-Input NAND Buffer	Chkd		14 DIP
74LS37	156-0466-00	N	F+	Quad 2-Input NAND Buffer			14 DIP
74LS37	156-0466-01	N	F+	Quad 2-Input NAND Buffer	Chkd		14 DIP
74LS37	156-0466-02	A	G	Quad 2-Input NAND Buffer	Scrnd		14 DIP
7438	156-0145-02	N	G	Quad 2-Input NAND Buffer w/OC Outputs	Scrnd		14 DIP
7438J	156-0592-00	N	H-	Quad 2-Input NAND Buffer w/ OC Outputs			14 DIP

BUFFERS/INVERTERS (CONT)

VENDOR NUMBER	PART NUMBER	ND	CC	DESCRIPTION	OTHER	RC	CASE STYLE
7438J	156-0592-01	N	H-	Quad 2-Input NAND Buffer w/OC Outputs	Chkd		14 DIP
7438J	156-0592-02	N		Quad 2-Input NAND Buffer w/OC Outputs	Scrnd		14 DIP
74S38	156-1393-01	A	G+	Quad 2-Input NAND Buffer w/OC Outputs	Scrnd		14 DIP
74LS38	156-0467-02	A	G	Quad 2-Input NAND Buffer w/OC Outputs	Scrnd		14 DIP
7440	156-0036-00	N	F+	Dual 4-Input NAND Buffer			14 DIP
7440	156-0036-01	N	F+	Dual 4-Input NAND Buffer	Chkd		14 DIP
7440	156-0036-02	N	G-	Dual 4-Input NAND Buffer	Scrnd		14 DIP
74LS126	156-1619-00	A	H-	Quad Bus Bfr w/3-St Output	Scrnd		14 DIP
74128	156-0451-02	N	H	Quad 2-Input NOR Buffer	Scrnd		14 DIP
74128J	156-0613-01	N	G+	Quad 2-Input NOR Buffer	Chkd		14 DIP
74S240	156-1058-00	N	J+	Octal Inv Buffer w/3-St Out			20 DIP
74F240	156-1744-00	U	J+	Octal Buffer/Line Driver			20 DIP
74S240	156-1058-01	A	K	Octal Inv Buffer w/3-St Out	Scrnd		20 DIP
74LS240	156-0914-02	A	I	Octal Inv Buffer w/3-St Out	Scrnd		20 DIP
74ALS240	156-1753-00	U		Octal Buffer/Line Driver	Scrnd		20 DIP
74ALS240 -1	156-1753-01	U		Octal Buffer/Line Driver (High Drive)	Scrnd		20 DIP
74F241	156-1745-00	U	J+	Octal Buffer/Line Driver			20 DIP
74S241	156-1179-00	N	J+	Octal Buffer w/3-State Out			20 DIP
74S241	156-1179-01	A	K	Octal Buffer w/3-State Out	Scrnd		20 DIP
74LS241	156-0955-02	A	I-	Octal Bfr w/3-State Out	Scrnd	4D	20 DIP
74LS242	156-1025-00	N	I+	Octal Bfr/Driver/Receiver			14 DIP
74LS242	156-1025-01	N	I+	Octal Buffer/Driver/Rcvr	Chkd		14 DIP
74LS242	156-1025-02	A	H+	Octal Buffer/Driver/Rcvr	Scrnd		14 DIP
74LS243	156-0928-00	N	I-	Octal Buffer/Driver/Rcvr		4D	14 DIP
74LS243	156-0928-01	N	I-	Octal Buffer/Driver/Rcvr	Chkd		14 DIP
74LS243	156-0928-02	N	I	Octal Buffer/Driver/Rcvr	Scrnd		14 DIP
74LS244	156-0956-02	A	I	Octal Buffer w/3-State Out	Scrnd	5C	20 DIP
74F245	156-1725-00	U	L-	Octal Buffer/Driver/Rcvr			20 DIP
74LS245	156-1111-02	A	J	Octal Buffer/Driver/Rcvr	Scrnd	5C	20 DIP
74ALS245	156-1748-00	U		Octal Buffer/Driver/Rcvr (Lo Drive)			
74ALS245-1	156-1748-01	U		Octal Buffer/Driver/Rcvr (Hi Drive)			
74LS366	156-0702-00	A	G	3-St Hex Inverter/Buffer			16 DIP
74LS366	156-0702-01	A	G-	3-St Hex Inverter/Buffer	Scrnd		16 DIP
8T95	156-1018-00	A	I	Hex 3-St Bfr Comm Disbl (Schottky)			16 DIP
8T97	156-0998-00	N	I+	HS Hex 3-St Bfr, Separable Disable (Schottky)		3E	16 DIP
8T97	156-0998-01	A	I	HS Hex 3-St Bfr, Separable Disable (Schottky)	Scrnd		16 DIP
8T98	156-0999-00	N	I+	HS Hex 3-St Inv (Schottky)		4H	16 DIP
8T98	156-0999-01	A	I	HS Hex 3-St Inv (Schottky)	Scrnd		16 DIP
8094	156-0396-02	N	H-	Quad, 2-Inp, 3-St Buffer	Scrnd		14 DIP
81LS95	156-1277-00	A	I+	Octal, 3-State	Scrnd	5D	20 DIP
81LS97	156-0916-02	A	I+	Octal, 2-Inp, 3-St Buffer	Scrnd	5C	20 DIP
81LS98	156-1479-00	N	I	Octal Inv Buffer, 3-State			20 DIP
81LS98	156-1479-01	A	I	Octal Inv Buffer, 3-State	Scrnd		20 DIP
88L12	156-1347-00	N	G	Hex Inv, Interface Gate			14 DIP
29827	156-1840-00	U		10-Bit Bus Buffer	Scrnd		24 DIP

CONVERTERS

VENDOR NUMBER	PART NUMBER	ND	CC	DESCRIPTION	OTHER	RC	CASE STYLE
74184	156-0315-00	N	I+	BCD to Binary Converter			16 DIP
74184	156-0315-01	N	I+	BCD to Binary Converter	Chkd		16 DIP
74184	156-0315-02	N	J+	BCD to Binary Converter	Scrnd		16 DIP
74185	156-0345-00	N	J+	Binary to BCD Converter		2I	16 DIP
74185	156-0345-01	N	J+	Binary to BCD Converter	Chkd		16 DIP
74185	156-0345-02	N	K-	Binary to BCD Converter	Scrnd		16 DIP

ATTENTION
OBSERVE PRECAUTIONS FOR HANDLING
ELECTROSTATIC SENSITIVE DEVICES

THIS APPLIES TO ALL DEVICES ON THIS PAGE.

††FOR RELIABILITY CODES, SEE PAGE 1-16.

INTEGRATED CIRCUITS, DIGITAL (CONT)

TTL

FOR LISTING BY FAMILY NUMBERS, SEE PAGES 1-22 THRU 1-25.

COUNTERS

VENDOR NUMBER	PART NUMBER	** ND	CC	DESCRIPTION	OTHER	†† RC	CASE STYLE
4018	156-0202-00	N	K	Prog. Module-N Hex		3G	16 DIP
4018	156-0202-02	N	K-	Prog. Module-N Hex	Scrnd		16 DIP
7490	156-0079-02	N	G+	Decade	Scrnd		14 DIP
7490A	156-0395-00	N	G	Decade (32 MHz)			14 DIP
7490A	156-0395-01	N	G	Decade (32 MHz)	Scrnd		14 DIP
74LS90	156-0656-02	A	G+	Decade	Scrnd		14 DIP
7492	156-0114-00	N	G	Divide by 12			14 DIP
7492	156-0114-01	N	G	Divide by 12	Chkd		14 DIP
7492	156-0114-02	N	G	Divide by 12			14 DIP
74LS92	156-1108-02	A	G+	Divide by 12	Scrnd		14 DIP
7493	156-0032-03	N	G+	4-Bit Binary	Scrnd		14 DIP
7493J	156-0561-00	N	G+	4-Bit Binary			14 DIP
7493J	156-0561-01	N	G+	4-Bit Binary	Chkd		14 DIP
74LS93	156-0646-02	A	G+	4-Bit Binary	Scrnd		14 DIP
7497	156-0311-02	N	J-	6-Bit Binary Rate Multiplr	Scrnd		16 DIP
74161	156-0117-00	N	H-	Syn 4-Bit Binary		4E	16 DIP
74161	156-0117-01	N		Syn 4-Bit Binary	Chkd		16 DIP
74161	156-0117-02	N		Syn 4-Bit Binary	Scrnd		16 DIP
74S161	156-1044-00	N	J	Syn 4-Bit Binary			16 DIP
74S161	156-1044-01	A	J+	Syn 4-Bit Binary	Scrnd		16 DIP
74LS161	156-0844-02	A	H	Syn 4-Bit Binary	Scrnd		16 DIP
74LS162	156-0788-01	A	H	Syn 4-Bit Decade	Scrnd	4C	16 DIP
74163	156-0248-02	N	H-	Syn 4-Bit Binary	Scrnd		16 DIP
74S163	156-1198-01	A	K-	Syn 4-Bit Binary	Scrnd		16 DIP
74LS163	156-0784-00	N	H-	Syn 4-Bit Binary		4E	16 DIP
74LS163	156-0784-01	N	H-	Syn 4-Bit Binary	Chkd		16 DIP
74LS163	156-0784-02	A	H+	Syn 4-Bit Binary	Scrnd	4B	16 DIP
74LS168	156-1371-00	A	I	Syn Up/Down Binary			
74LS169	156-0957-01	A	H+	Syn Up/Down Binary	Chkd		16 DIP
74S169	156-0765-03	N	J+	Syn Up/Down Binary	Chkd	4E	16 DIP
74S169	156-0765-04	A	J+	Syn Up/Down Binary	Scrnd		16 DIP
74177	156-0536-02	N	I-	Preset Binary Latch/Cntr	Scrnd		14 DIP
74190	156-0340-00	N	H	Syn BCD Up/Down			16 DIP
74190	156-0340-01	N	H	Syn BCD Up/Down	Chkd		16 DIP
74190	156-0340-02	N	E+	Syn BCD Up/Down	Scrnd		16 DIP
74LS190	156-0569-00	N	H-	BCD Counter			16 DIP
74F191	156-1714-00	U	J+	Syn Up/Down			16 DIP
74LS191	156-0422-02	A	H	Syn 4-Bit Up/Down Binary	Scrnd	4B	16 DIP
74192	156-0127-00	N	H-	Syn Up/Down BDC			16 DIP
74192	156-0127-01	N	H-	Syn Up/Down BDC	Chkd		16 DIP
74192	156-0127-02	N	I	Syn Up/Down BDC	Scrnd		16 DIP
74LS192	156-0526-00	A	H-	Syn Up/Down BCD			16 DIP
74LS192	156-0526-01	N	H-	Syn Up/Down BCD	Chkd		16 DIP
74LS192	156-0526-02	A	H-	Syn Up/Down BCD	Scrnd		16 DIP
74193	156-0089-00	N	H-	Syn Up/Down 4-Bit		4F	16 DIP
74193	156-0089-02	N	H-	Syn Up/Down 4-Bit	Scrnd		16 DIP
74193J	156-0565-00	N	H-	Syn Up/Down 4-Bit			16 DIP
74193J	156-0565-01	N	H-	Syn Up/Down 4- Bit	Chkd		16 DIP
74LS193	156-0412-02	A	H	Syn Up/Down 4-Bit	Scrnd		16 DIP
74196	156-0097-00	N	H	Presettable Decade			14 DIP
74196	156-0097-01	N	H	Presettable Decade	Scrnd	3G	14 DIP
74S196	156-0482-00	N	J-	Presettable Decade		3H	14 DIP
74S196	156-0482-01	A	I+	Presettable Decade	Scrnd		14 DIP
74L196J	156-0883-00	N	J+	100 MHz Preset Decade/Bnry			14 DIP
74S196J	156-0883-01	N	J+	100 MHz Preset Decade/Bnry	Chkd		14 DIP
74S196J	156-0883-02	N	J	100 MHz Preset Decade/Bnry	Scrnd		14 DIP
74LS196	156-0727-01	A	H	30 MHz Preset Decade/Bnry	Scrnd		14 DIP
74197	156-0142-00	N	H-	Preset Binary Latch/Cntr		4E	16 DIP
74197	156-0142-01	N	H-	Preset Binary Latch/Cntr	Chkd		16 DIP
74197	156-0142-02	N	H-	Preset Binary Latch/Cntr	Scrnd		16 DIP
74197J	156-0596-00	N	I-	Preset Binary Latch/Cntr			14 DIP
74197J	156-0596-01	N	I-	Preset Binary Latch/Cntr	Chkd		14 DIP
74S197	156-1183-00	A	J+	Preset Binary Latch/Cntr	Scrnd		14 DIP
74LS197	156-0629-00	N	H-	30 MHz Preset Binary		4E	14 DIP
74LS197	156-0629-01	A	H	30 MHz Preset Binary	Scrnd		14 DIP
74390	156-0626-02	N	I	Dual Decade	Scrnd		16 DIP
74LS390	156-0910-02	A	H+	Dual Decade	Scrnd	4B	16 DIP
74393	156-0617-02	N	I+	Dual 4-Bit	Scrnd		14 DIP
74LS393	156-1172-01	A	H+	Dual 4-Bit Binary	Scrnd	5D	14 DIP
74LS461	156-1732-00	U	L-	Counter, Octal w/3-St Out			24 DIP
74LS490	156-1448-00	N	I-	Dual 4-Bit Decade			16 DIP

COUNTERS (CONT)

VENDOR NUMBER	PART NUBMER	** ND	CC	DESCRIPTION	OTHER	†† RC	CASE STYLE
74LS490	156-1448-01	A	I-	Dual 4-Bit Decade	Scrnd		16 DIP
74ALS569	156-1757-00	U		Counter, 4-Bit Up/Down	Scrnd		16 DIP
8556	156-1054-00	N	I+	Binary, w/3-State Out			16 DIP
8556	156-1054-01	N	I+	Binary, w/3-State Out	Scrnd		16 DIP
9310	156-0084-00	N	H-	Syn BCD Decade			16 DIP
9310	156-0084-02	N	H-	Syn BCD Decade	Scrnd		16 DIP

DATA SELECTORS/MULTIPLEXERS

VENDOR NUMBER	PART NUMBER	** ND	CC	DESCRIPTION	OTHER	†† RC	CASE STYLE
74150	156-0299-00	N	H+	16-Input with Enable		3E	24 DIP
74150	156-0299-01	N	I-	16-Input with Enable	Chkd		24 DIP
74150	156-0299-02	N	H	16-Input with Enable	Scrnd		24 DIP
74150J	156-0597-00	N	H	16-Input with Enable			24 DIP
74150J	156-0597-01	N	I-	16-Input with Enable	Chkd		24 DIP
74151A	156-0075-00	N	G	8-Inp Data Sel/Mux w/Enable		4F	14 DIP
74151A	156-0075-01	N	G	8-Inp Data Sel/Mux w/Enable	Chkd		14 DIP
74151A	156-0075-02	N	G+	8-Inp Data Sel/Mux w/Enable	Scrnd		14 DIP
74151J	156-0563-00	N	H	8-Inp Data Sel/Mux w/Enable			14 DIP
74151J	156-0563-01	N	H	8-Inp Data Sel/Mux w/Enable	Chkd		14 DIP
74F151	156-1746-00	U	I+	8-Inp Multiplexer			16 DIP
74LS151	156-0994-02	A	G+	8-Inp Data Sel/Mux w/Enable	Scrnd	4D	16 DIP
74153	156-0098-00	N	G	Dual, 4-Input with Enable		3F	16 DIP
74153	156-0098-01	N	G	Dual, 4-Input with Enable	Chkd		16 DIP
74153	156-0098-02	N	G+	Dual, 4-Input with Enable	Scrnd		16 DIP
74F153	156-1662-00	A	I+	Dual, 4-Input with Enable	Scrnd		16 DIP
74S153	156-0325-02	A	H	Dual, 4-Input with Enable	Scrnd	4C	16 DIP
74LS153	156-0798-02	A	H-	Dual, 4-Input with Enable	Scrnd		16 DIP
74157	156-0125-00	N	G	Quad, 2 to 1 Mux		4G	16 DIP
74157	156-0125-01	N	G	Quad, 2 to 1 Mux	Chkd		16 DIP
74157	156-0125-02	N	H-	Quad, 2 to 1 Mux	Scrnd		16 DIP
74S157	156-1064-00	N	H	Quad, 2 to 1 Mux		4D	16 DIP
74S157	156-1064-01	N	H	Quad, 2 to 1 Mux	Chkd		16 DIP
74S157	156-1064-02	A	I+	Quad, 2 to 1 Mux	Scrnd	4E	16 DIP
74LS157	156-0530-02	A	G+	Quad, 2 to 1 Mux	Scrnd	5D	16 DIP
74S158	156-1351-00	N	H	Quad, 2 to 1 Line, Data w/Inverted Outputs			16 DIP
74S158	156-1351-01	A	I-	Quad, 2 to 1 Line, Data w/Inverted Outputs	Scrnd		16 DIP
74LS158	156-1395-01	A	H-	Quad, 2 to 1 Sel/Mux	Scrnd		16 DIP
74251	156-0397-00	N	H-	8-Input w/3-State Outputs			16 DIP
74251	156-0397-01	N	H-	8-Input w/3-State Outputs	Chkd		16 DIP
74251	156-0397-02	N	H	8-Input w/3-State Outputs	Scrnd		16 DIP
74LS251	156-0470-02	A	H-	8-Input w/3-State Outputs	Scrnd		16 DIP
74LS253	156-0471-02	A	H-	Dual 4 to 1 Line Data Sel w/3-State Outputs	Scrnd		16 DIP
74S257	156-0522-02	A	I-	Quad 2-Inp Mux w/3-St Outp	Scrnd		16 DIP
74LS257	156-0529-02	A	G+	Quad 2-Inp Mux w/3-St Outp	Scrnd	5B	16 DIP
74S258	156-1547-00	A	H+	Quad 2 to 1 Line Data Sel/ Mux	Scrnd		16 DIP
74LS258	156-1229-01	A	H	Quad, 2 to 1 Sel/Mux w/3-State Outputs	Scrnd		16 DIP
74298	156-0373-00	N	H	Quad, 2-Inp Mux w/Storage		2H	16 DIP
74298	156-0373-01	N	H	Quad, 2-Inp Mux w/Storage	Chkd		16 DIP
74298	156-0373-02	N	H	Quad, 2-Inp Mux w/Storage	Scrnd		16 DIP
74LS298	156-1045-01	A	H+	Quad, 2-Inp Mux w/Storage	Scrnd		16 DIP
74LS352	156-1521-00	A	H-	Dual, 4 to 1 Line Inverted Sel/Mux	Scrnd		16 DIP
74LS399	156-1388-00	A	H+	Quad, 2-Inp Mux w/Storage	Scrnd		16 DIP
74LS450	156-1761-00	U	K	16:1 Multiplexer	Scrnd		14 DIP
8234	156-0336-00	N	I+	2-Input, 4-Bit			16 DIP
8234	156-0336-01	N	I+	2-Input, 4-Bit	Scrnd		16 DIP
8234	156-0336-02	N	I+	2-Input, 4-Bit			16 DIP

THIS APPLIES TO ALL DEVICES ON THIS PAGE.

**NEW DESIGN RECOMMENDATION FROM COMPONENT ENGINEERING:

A = Acceptable
N = Not Recommended
U = Undefined

INTEGRATED CIRCUITS, DIGITAL (CONT)

TTL

FOR LISTING BY FAMILY NUMBERS, SEE PAGES 1-22 THRU 1-25.

DECODERS

VENDOR NUMBER	PART NUMBER	** ND	CC	DESCRIPTION	OTHER	†† RC	CASE STYLE
7442	156-0061-00	N	G	BCD to Decimal Decoder			16 DIP
7442	156-0061-01	N	G	BCD to Decimal Decoder	Chkd		16 DIP
7442	156-0061-02	N	G+	BCD to Decimal Decoder	Scrnd		16 DIP
7442J	156-0556-00	N	G+	BCD to Decimal Decoder			16 DIP
7442J	156-0556-01	N	G+	BCD to Decimal Decoder	Chkd		16 DIP
74LS42	156-0736-02	A	H-	BCD to Decimal Decoder	Scrnd		16 DIP
7447A	156-0128-01	N	H-	BCD to 7-Seg Driver/Decoder	Scrnd		16 DIP
74F138	156-1727-00	U	I+	1 of 8 Decoder/Demux	Scrnd		16 DIP
74S138	156-0694-02	A	I+	3-Line to 8-Line	Scrnd		16 DIP
74LS138	156-0469-02	A	H-	3-Line to 8-Line	Scrnd	5C	16 DIP
74F139	156-1726-00	U	I+	Dual, 1 of 4 Decoder	Scrnd		16 DIP
74S139	156-0693-02	A	I-	Dual 2-Line to 4-Line Demux/Decoder	Scrnd		16 DIP
74LS139	156-0541-02	A	H-	Dual 2-Line to 4-Line Demux/Decoder	Scrnd	4B	16 DIP
74145	156-0111-00	N	H-	BCD to Dec Drvr/Dcdr OC		4E	16 DIP
74145	156-0111-01	N	H-	BCD to Dec Drvr/Dcdr OC	Chkd		16 DIP
74145	156-0111-02	N	H-	BCD to Dec Drvr/Dcdr OC	Scrnd		16 DIP
74145J	156-0598-00	N	I-	BCD to Dec Driver/Decoder OC Output, Ceramic Pkg			16 DIP
74145J	156-0598-01	N	I-	BCD to Dec Driver/Decoder OC Output, Ceramic Pkg	Chkd		16 DIP
74154	156-0078-02	N	H	4-Ln to 16-Lin Demux/Dcdr	Scrnd		24 DIP
74154J	156-0564-00	N	I+	4-Ln to 16-Lin Demux/Dcdr			24 DIP
74154J	156-0564-01	N	I+	4-Ln to 16 Lin Demux/Dcdr	Chkd		24 DIP
74LS154	156-1026-02	A	H+	4-Line to 16 Line Decoder	Scrnd	4D	24 DIP
74155	156-0110-00	N	G	Dual, 2-Ln to 4-Ln Demux/Decoder			16 DIP
74155	156-0110-01	N	G	Dual, 2-Ln to 4-Ln Demux/Decoder	Chkd	3E	16 DIP
74155	156-0110-02	N	G+	Dual, 2-Line to 4-Line Demux/Decoder	Scrnd		16 DIP
74LS155	156-0390-00	N	G	Dual, 2-Line to 4-Line Decoder		3G	16 DIP
74LS155	156-0390-01	N	G	Dual, 2-Line to 4-Line Decoder	Chkd		16 DIP
74LS155	156-0390-02	A	G+	Dual, 2-Line to 4-Line Decoder	Scrnd		16 DIP
74156	156-0141-02	N	G+	Dual, 2-Line to 4-Line Decoder	Scrnd		16 DIP
74LS156	156-1432-00	N	G+	Dual, 2-Line to 4-Line Decoder			16 DIP
74LS156	156-1432-01	N	G+	Dual, 2-Line to 4-Line Decoder	Chkd	3H	16 DIP
74LS156	156-1432-02	A	G+	Dual, 2-Line to 4-Line Decoder	Scrnd	2J	24 DIP
74159	156-0929-00	N	H	4-Line to 16-Line Demux/Decoder w/OC Outputs			24 DIP
8T06	156-0379-00	N	I+	BCD to 7-Seg Driver/Dcdr		4E	16 DIP
8T06	156-0379-02	A	I+	BCD to 7-Seg Driver/Dcdr	Scrnd		16 DIP
8880	156-0284-03	N	I	BCD to 7-Seg Driver/Dcdr	Scrnd		16 DIP
9368	156-0493-00	N	I	Hex to 7-Seg Driver/Dcdr/Latch		4F	16 DIP
9368	156-0493-02	N	I	Hex to 7-Seg Driver/Dcdr/Latch	Chkd		16 DIP
25LS2538	156-1546-00	A	J	1-of-8 Decoder w/3-State Output & Polarity Control	Scrnd		20 DIP

DRIVERS/RECEIVERS/TRANSCEIVERS

VENDOR NUMBER	PART NUMBER	** ND	CC	DESCRIPTION	OTHER	†† RC	CASE STYLE
UHP-408	156-1528-00	A	I+	Quad, 2-Inp NAND Pwr Drvr			14 DIP
1488	156-0879-01	A	I	Quad Line Driver	Scrnd	4F	14 DIP
1489L	156-0878-01	A	I	Quad Line Receiver	Scrnd	4C	14 DIP
26S10	156-1747-00	U	K	Quad Bus Receiver			16 DIP
26S12	156-0483-00	N	I+	Quad Bus Transceiver		3F	16 DIP
26LS30	156-1316-00	A	J	Quad, 3-St, Single End RS422-RS423 Line Driver	Scrnd	4F	16 DIP
26LS31	156-1681-00	A	K	Quad, Diff Line Driver	Scrnd		16 DIP
26LS32	156-1315-00	A	J+	Quad, Diff RS422-RS423 Rcvr		4H	16 DIP
AM2908	156-1618-00	A	K	Quad Bus Transcvr w/Intfc Logic (Low Power Schottky)	Scrnd		20 DIP
3245	156-0992-00	N	L-	Quad TTL to MOS Drvr (Scht)			16 DIP
3440P	156-1219-00	N	L	GPIB Transceiver		3F	16 DIP
3440P	156-1219-03	A		GPIB Transceiver	Scrnd		16 DIP
3441P	156-0600-00	N	J	Quad Bus Transceiver		4F	16 DIP
3441P	156-0600-03	A		Quad Bus Transceiver	Scrnd		16 DIP
3446	156-0849-00	A	J	Quad Interfc Bus Transcvr			16 DIP
3448	156-1133-00	N	J+	Quad 3-State Transceiver			16 DIP
3448	156-1133-01	N	J+	Quad 3-State Transceiver	Chkd		16 DIP
3448	156-1133-02	A	J+	Quad 3-State Transceiver	Scrnd	4E	16 DIP
3459	156-0740-00	N	I+	Quad NAND Address Ln Driver			14 DIP
3459	156-0740-02	N		Quad NAND Address Ln Driver	Scrnd		14 DIP
6118	156-1649-00	A	I	Fluoro Display Driver	Scrnd		18 DIP
7447	156-0128-01	N	H-	BCD to 7-Seg Decoder/Driver			16 DIP
74LS47	156-1243-00	N	H-	BCD to 7-Seg Decoder/Driver		3E	16 DIP
74LS47	156-1243-01	A	H	BCD to 7-Seg Decoder/Driver	Scrnd		16 DIP
74LS140	156-0419-02	A	G+	Dual 4-Inp NAND 50Ω Ln Drvr	Scrnd	4D	16 DIP
74145	156-0111-00	N	H-	BCD to Dec Decoder/Driver		4E	16 DIP
74145	156-0111-01	N	H-	BCD to Dec Decoder/Driver	Chkd		16 DIP
74145J	156-0598-00	N	I-	BCD to 7-Seg Decoder/Drvr			16 DIP
74145J	156-0598-01	N	I-	BCD to 7-Seg Decoder/Drvr	Chkd		16 DIP
74LS145	156-1235-00	A	H	BCD to Dec Decoder/Driver	Scrnd	4G	16 DIP
74F240	156-1744-00	U	J+	Octal Buffer/Line Driver			20 DIP
74ASL240	156-1753-00	U		Octal Buffer/Line Driver	Scrnd		20 DIP
74ALS240 -1	156-1753-01	U		Octal Buffer/Line Driver	Scrnd		20 DIP
74F241	156-1745-00	U	J+	Octal Buffer/Line Driver			20 DIP
74LS242	156-1025-00	N	H+	Quad Bus Transceiver/Bfr		3H	14 DIP
74LS242	156-1025-01	N	H+	Quad Bus Transceiver/Bfr	Chkd		14 DIP
74LS242	156-1025-02	A	I-	Quad Bus Transceiver/Bfr	Scrnd		14 DIP
74LS243	156-0928-00	N	I-	Quad Bus Transceiver/Bfr		4D	14 DIP
74LS243	156-0928-01	N	I-	Quad Bus Transceiver/Bfr	Chkd		14 DIP
74LS243	156-0928-02	N	I	Quad Bus Transceiver/Bfr	Scrnd		14 DIP
74ALS1244	156-1754-00	U		Octal Buffer/Line Driver w/3-State Output	Scrnd		20 DIP
74F245	156-1725-00	U	L-	Octal Bus Transceiver	Scrnd		20 DIP
74LS245	156-1111-02	A	J	Octal Bus Transceiver	Scrnd	5C	20 DIP
74ALS245 -1	156-1748-01	U		Octal Buffer/Driver/Rcvr (Hi Drive)			
74ALS1245	156-1748-00	U		Octal Buffer/Driver/Rcvr (Lo Drive)			
74LS362	156-0993-00	N	K+	4-Phase Clock/Gen/Driver		1J	20 DIP
74LS362	156-0993-01	A	M	4-Phase Clock/Gen/Driver	Scrnd		20 DIP
74LS362	156-0993-02	N	N-	4-Phase Clock/Gen/Driver Ceramic Pkg			20 DIP
74365N	156-1187-00	N	G	Hex Bus Driver w/3-St Outp			16 DIP
74LS365	156-1220-00	N	G-	Hex Bus Driver w/3-St Outp			16 DIP
74LS365	156-1220-01	A	G+	Hex Bus Driver w/3-St Outp	Scrnd		16 DIP
74LS367	156-0852-02	A	G+	Hex w/3-St Input Driver	Scrnd	5D	16 DIP
74LS368	156-0720-02	A	H-	Hex Bus Drvr w/3-St Input, 4-Line & 2-Line Enable	Scrnd	4D	16 DIP
74LS646	156-1661-00	U	K+	Octal Bus Transceiver	Scrnd		
74AS804	156-1617-00	A	J+	Hex 2-Inp NAND Drvr (Scht)	Scrnd		20 DIP
75107A	156-0177-00	N	H-	Dual Line Receiver		3E	16 DIP
75107A	156-0177-02	N	I-	Dual Line Receiver	Scrnd		16 DIP
75110	156-1523-00	A	H	Dual Line Driver			14 DIP
75150	156-0139-00	A	H	Dual Line Driver		4F	8 DIP
75150	156-0139-02	N	H+	Dual Line Driver	Scrnd		8 DIP
75152	156-0934-00	A	J-	Dual Line Receiver			16 DIP
75154	156-0138-00	A	I-	Quad Line Receiver		4G	16 DIP
75154	156-0138-02	N	I	Quad Line Receiver	Scrnd		16 DIP

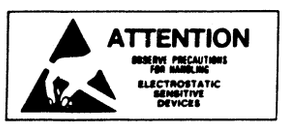

THIS APPLIES TO ALL DEVICES ON THIS PAGE

†† CATALOG RELIABILITY CODES

USAGE/YR	CODE
≥10	1
≥100	2
≥1 000	3
≥10 000	4
≥100 000	5
≥1 000 000	6
≥10 000 000	7

FAILURE FREQ	CODE		%/YR (median)
1/100 000	A	=	.001
1/50 000	B	=	.002
1/20 000	C	=	.005
1/10 000	D	=	.01
1/5 000	E	=	.02
1/2 000	F	=	.05
1/1 000	G	=	.1
1/500	H	=	.2
1/200	I	=	.5
1/100	J	=	1.0+

For further explanation of this code, see page 4-72.

INTEGRATED CIRCUITS, DIGITAL (CONT)

TTL

FOR LISTING BY FAMILY NUMBERS, SEE PAGES 1-22 THRU 1-25.

DRIVERS/RECEIVERS/TRANSCEIVERS (CONT)

VENDOR NUMBER	PART NUMBER	** ND	CC	DESCRIPTION	OTHER	†† RC	CASE STYLE
75183	156-0181-00	N	I-	Dual Line Driver			14 DIP
75325	156-0206-00	N	H+	Interface Core Driver			16 DIP
75325	156-0206-02	N	I-	Interface Core Driver	Scrnd		16 DIP
75451	156-0094-00	N	G-	Dual 2-Input AND Driver		4E	8 DIP
75451	156-0094-02	A	G	Dual 2-Input AND Driver	Scrnd		8 DIP
75452	156-0302-00	N	G+	Dual 2-Input NAND Driver		4D	8 DIP
75452	156-0302-02	A	G	Dual 2-Input NAND Driver	Scrnd		8 DIP
75453	156-0341-02	A	G+	Dual 2-Input OR Driver	Scrnd		8 DIP
75454	156-0313-00	N	G-	Dual 2-Input NOR Driver			8 DIP
75454	156-0313-02	A	G	Dual 2-Input NOR Driver	Scrnd		8 DIP
75494	156-0888-02	N	H	Hex Digit Driver	Scrnd		16 DIP
8T06	156-0379-00	N	I+	BCD to 7-Seg Decoder/Drvr		4E	16 DIP
8T06	156-0379-02	N	I+	BCD to 7-Seg Decoder/Drvr	Scrnd		16 DIP
8T09	156-0851-00	N	G+	Quad to Bus Driver			14 DIP
8T09	156-0851-02	N	H-	Quad to Bus Driver	Scrnd		14 DIP
8T13	156-0273-00	N	H	Dual Line Driver			14 DIP
8T15	156-0997-00	N	J-	Dual Line Driver		1J	14 DIP
8T16	156-0995-00	N	J	Dual Line Comm Line Driver		2J	14 DIP
8224	156-0945-00	N	J+	Clock Generator/Driver		3G	14 DIP
8T26	156-0996-00	N	I-	Quad Bus Trcvr, 3-St (Scht)		3I	16 DIP
8T26	156-0996-01	A	I	Quad Bus Trcvr, 3-St (Scht)	Scrnd		16 DIP
8654	156-1454-00	N	I+	8-Output Display Driver		4I	18 DIP
8654	156-1454-01	N	J+	8-Output Display Driver	Scrnd		18 DIP
8831	156-0506-00	N	H+	Quad 1-3 Dual Diff Ln Drvr			16 DIP
8833	156-0531-02	N	I-	Quad Unified Bus Transcvr	Scrnd		16 DIP
8836	156-0456-00	N	G+	Quad 2-Input NOR Bus Rcvr			14 DIP
8836	156-0456-01	N	G+	Quad 2-Inp NOR Bus Rcvr	Chkd		14 DIP
8836	156-0456-02	N	H+	Quad 2-Input NOR Bus Rcvr	Scrnd		14 DIP
8837	156-0455-02	N	I	Hex Bus Receiver	Scrnd	3E	16 DIP
8838	156-0653-02	N	I-	Quad Unified Bus Trscvr, Inverted	Scrnd	4D	16 DIP
8863	156-1407-00	A	I+	MOS to LED 8-Dgt Dsply Drvr			18 DIP
9368PC	156-0493-00	N	I	BCD to 7-Seg Dcdr/Driver		4F	16 DIP
9368PC	156-0493-02	N	I+	BCD to 7-Seg Dcdr/Driver	Scrnd		16 DIP
9614	156-0275-00	N	I	Dual Diff Line Driver			16 DIP
9614	156-0275-01	N	I+	Dual Diff Line Driver	Scrnd		16 DIP
9615	156-0274-00	N	J-	Dual Diff Line Receiver			16 DIP
9615	156-0274-01	N	I+	Dual Diff Line Receiver	Scrnd		16 DIP
9616	156-1544-00	N	I+	Triple Line Driver		2J	14 DIP
Z8103	156-1597-00	A	J+	Octal, 3-State Bidirect Bus Transceiver (Schottky)			20 DIP

ENCODERS

VENDOR NUMBER	PART NUMBER	** ND	CC	DESCRIPTION	OTHER	†† RC	CASE STYLE
74147	156-0347-02	N	I-	10-Line to 4-Line w/o Enable Enc.	Scrnd		16 DIP
74LS147	156-1177-01	A	I+	10-Line to 4-Line w/o Enable Enc.	Scrnd		16 DIP
74148	156-0219-02	N	H	8-Line to 3-Line with Enable Enc.	Scrnd		16 DIP
74LS148	156-1252-00	A	I+	8-Line to 3-Line	Scrnd		16 DIP
74LS348	156-1176-01	A	I+	8-Line to 3-Line w/3-State Output	Scrnd	4D	16 DIP

FLIP-FLOPS

VENDOR NUMBER	PART NUMBER	** ND	CC	DESCRIPTION	OTHER	†† RC	CASE STYLE
7472	156-0038-00	N	F+	Single, J-K Master/Slave			14 DIP
7472	156-0038-01	N	F+	Single, J-K Master/Slave	Chkd		14 DIP
7472	156-0038-02	N		Single, J-K Master/Slave	Scrnd		14 DIP
7473	156-0039-02	N	G	Dual, J-K Master/Slave, No Preset	Scrnd	4B	14 DIP
7473J	156-0557-00	N	H-	Dual, J-K Master/Slave, No Preset			14 DIP
7473J	156-0557-01	N	H-	Dual, J-K Master/Slave, No Preset	Chkd		14 DIP
74LS73	156-0387-02	A	G+	Dual, K-K, No Preset	Scrnd	4B	14 DIP
7474	156-0041-05	N	G-	Dual, D-Type w/Clear, Prst	Scrnd	5B	14 DIP
7474J	156-0558-00	N	G-	Dual, D-Type w/Clear, Prst			14 DIP
7474J	156-0558-01	N	G-	Dual, D-Type w/Clear, Prst	Chkd		14 DIP
74F74	156-1611-00	A	G+	Dual, D-Type, Edge Trigger		5C	14 DIP
74S74	156-0331-03	A	H-	Dual, D-Type w/Clear, Prst	Scrnd	5B	14 DIP

FLIP-FLOPS (CONT)

VENDOR NUMBER	PART NUMBER	** ND	CC	DESCRIPTION	OTHER	†† RC	CASE STYLE
74ALS74	156-1756-00	U		Dual, D-Type Pos Edge Trgrd	Scrnd		14 DIP
74LS74	156-0388-02	N		Dual, D-Type w/Clear, Prst	Chkd		14 DIP
74LS74	156-0388-03	A	G	Dual, D-Type w/Clear, Prst	Scrnd	5B	14 DIP
7476	156-0042-00	N	F+	Dual, J-K Master Slave w/Clear, Preset		4G	16 DIP
7476	156-0042-01	N	F+	Dual, J-K Master/Slave w/Clear, Preset	Chkd		16 DIP
7476	156-0042-02	N	G	Dual, J-K Master/Slave w/Clear, Preset	Scrnd		16 DIP
7476J	156-0560-00	N	G	Dual, J-K Master/Slave w/Clear, Preset			16 DIP
7476J	156-0560-01	N	G	Dual, J-K Master/Slave w/Clear, Preset	Chkd		16 DIP
74LS76	156-0731-02	A	G+	Dual, J-K w/Clear, Preset	Scrnd		16 DIP
74107	156-1083-00	N	F	Dual, J-K Master/Slave w/Clear	Scrnd		14 DIP
74109	156-1015-00	N	G	Dual, J-K w/Preset & Clear		2J	16 DIP
74S109	156-1061-02	A	I-	Dual, J-K w/Preset & Clear	Scrnd		16 DIP
74ALS109	156-1755-00	U		Dual, J-K Pos Edge Trgrd	Scrnd		
74LS109	156-1059-01	A	G-	Dual, J-K w/Preset & Clear	Scrnd		16 DIP
74111	156-0174-00	N	G+	Dual, J-K w/Data Lock		4F	16 DIP
74111	156-0174-01	N	G+	Dual, J-K w/Data Lock	Chkd		16 DIP
74111	156-0174-02	N	H-	Dual, J-K w/Data Lock	Scrnd		16 DIP
74111J	156-0593-00	N	H-	Dual, J-K w/Data Lock			16 DIP
74111J	156-0593-01	N	H-	Dual, J-K w/Data Lock	Chkd		16 DIP
74S112	156-0118-03	A	I-	Dual, J-K Neg Edge Trgrd	Scrnd	5C	16 DIP
74ALS112	156-1758-00	U		Dual, J-K Neg Edge Trgrd	Scrnd		
74LS112	156-1258-01	A	G	Dual, J-K Neg Edge Trgrd	Scrnd		16 DIP
74S113	156-1629-00	A	G+	Dual, J-K w/Preset	Scrnd		14 DIP
74LS113	156-0567-02	A	G+	Dual, J-K w/Preset	Scrnd		14 DIP
74174	156-0222-00	N	G+	Hex, D-Type w/Comm Clear & Comm Clock		4G	16 DIP
74174	156-0222-01	N	G+	Hex, D-Type w/Comm Clear & Comm Clock	Chkd	4D	16 DIP
74174	156-0222-02	N	G+	Hex, D-Type w/Comm Clear & Comm Clock	Scrnd		16 DIP
74174	156-0222-03	N	H-	Hex, D-Type w/Comm Clear & Comm Clock	Scrnd		16 DIP
74S174	156-0738-04	A	I+	Hex, D-Type w/Comm Clear & Comm Clock	Scrnd		16 DIP
74S174	156-0738-03	N	I	Hex, D-Type w/Comm Clear & Comm Clock, Cer Pkg only			16 DIP
74LS174	156-0391-02	A	H-	Hex, D-Type w/Comm Clear & Comm Clock	Scrnd	5B	16 DIP
74175	156-0221-02	N	H-	Quad, D-Type w/Comm Clear & Clock, Complm Output	Scrnd		16 DIP
74S175	156-0948-02	A	J+	Quad, D-Type w/Comm Clear & Comm Clock	Scrnd		16 DIP
74LS175	156-0392-03	A	H-	Quad, D-Type w/Comm Clear & Clock, Complm Output	Scrnd		16 DIP
74273	156-1708-00	N	J+	Octal, D-Type w/Clear	Scrnd		20 DIP
74LS273	156-0865-02	A	I	Octal, D-Type w/Clear	Scrnd	5A	20 DIP
74F374	156-1704-00	A	K-	Octal, D-Type w/Enable	Scrnd		20 DIP
74S374	156-1046-02	A	K-	Octal, D-Type w/Enable	Scrnd	5C	20 DIP
74LS374	156-0982-03	A	I+	Octal, D-Type w/Enable	Scrnd	5F	20 DIP
74LS377	156-0913-02	A	I	Octal, D-Type w/Enable	Scrnd	4D	20 DIP
74LS378	156-1221-00	A	I-	Hex, D-Type w/Enable	Scrnd		16 DIP
74LS379	156-1326-00	A	I-	Quad, D-Type w/Enable	Scrnd		16 DIP
74ALS564	156-1691-00	U	J+	Octal, D-Type Edge Trgrd			20 DIP
74ALS574	156-1664-00	U	K-	Octal, D-Type Edge Trgrd			
25LS2520	156-1729-00	U		Octal, D-Type w/Clear	Scrnd		22 DIP

ATTENTION
OBSERVE PRECAUTIONS FOR HANDLING
ELECTROSTATIC SENSITIVE DEVICES

THIS APPLIES TO ALL DEVICES ON THIS PAGE.

** NEW DESIGN RECOMMENDATION FROM COMPONENT ENGINEERING:

A = Acceptable
N = Not Recommended
U = Undefined
X = Do Not Use

INTEGRATED CIRCUITS, DIGITAL (CONT)

TTL

FOR LISTING BY FAMILY NUMBERS, SEE PAGES 1-22 THRU 1-25.

1

GATES

VENDOR NUMBER	PART NUMBER	** ND	CC	DESCRIPTION	OTHER	†† RC	CASE STYLE
PAL14L4	156-1669-00		K	Quad, 14-Inp AND/OR Invert			20 DIP
PAL16R4CJ	156-1659-00		M-	Quad, 16-Inp AND/OR			20 DIP
PAL16R6	156-1637-00		M-	Hex, 16-Input AND/OR			20 DIP
PAL16R8CJ	156-1658-00		L+	Octal, 16-Input AND/OR			20 DIP
7400	156-0030-03	N	G	Quad, 2-Input NAND	Scrnd		14 DIP
7400J	156-0549-00	N	F	Quad, 2-Input NAND			14 DIP
7400J	156-0549-01	N	F	Quad, 2-Input NAND	Chkd		14 DIP
74F00	156-1707-00	U	H-	Quad, 2-Input NAND	Scrnd		14 DIP
74S00	156-0180-04	A	G	Quad, 2-Input NAND	Scrnd	5D	14 DIP
74LS00	156-0382-02	A	G	Quad, 2-Input NAND	Scrnd	5A	14 DIP
7401	156-0057-00	N	F+	Quad, 2-Inp NAND w/OC Outp		4F	14 DIP
7401	156-0057-01	N	F+	Quad, 2-Inp NAND w/OC Outp	Chkd		14 DIP
7401	156-0057-02	N	G-	Quad, 2-Inp NAND w/OC Outp	Scrnd		14 DIP
7401J	156-0550-00	N	F+	Quad, 2-Inp NAND w/OC Outp			14 DIP
7401J	156-0550-01	N	F+	Quad, 2-Inp NAND w/OC Outp	Chkd		14 DIP
7402	156-0043-03	N	F+	Quad, 2-Input NOR	Scrnd		14 DIP
7402J	156-0551-00	N	F+	Quad, 2-Input NOR		1J	14 DIP
7402J	156-0551-01	N	F+	Quad, 2-Input NOR	Chkd		14 DIP
74F02	156-1743-00	U	H-	Quad, 2-Input NOR		3D	14 DIP
74S02	156-0690-03	A	G+	Quad, 2-Input NOR	Scrnd		14 DIP
74LS02	156-0383-02	A	G	Quad, 2-Input NOR	Scrnd	5A	14 DIP
7403	156-0186-02	N	F+	Quad, 2-Inp NAND w/OC Outp	Scrnd		14 DIP
74S03	156-0303-01	A	G	Quad, 2-Input NAND	Scrnd		14 DIP
74LS03	156-0384-00	N	F+	Quad, 2-Input NAND		4D	14 DIP
74LS03	156-0384-02	A	G-	Quad, 2-Input NAND	Scrnd		14 DIP
7408	156-0129-02	N	G-	Quad, 2-Input AND	Scrnd		14 DIP
7408J	156-0588-00	N	F+	Quad, 2-Input AND			14 DIP
7408J	156-0588-01	N	F+	Quad, 2-Input AND	Chkd		14 DIP
74F08	156-1723-00	U	H-	Quad, 2-Input AND	Scrnd		
74S08J	156-0459-02	A	G+	Quad, 2-Input AND	Scrnd		14 DIP
74LS08	156-0480-02	A	G	Quad, 2-Input AND	Scrnd	5B	14 DIP
7409	156-0460-00	N	G-	Quad, 2-Inp AND w/OC Outp			14 DIP
7409	156-0460-01	N	G-	Quad, 2-Inp AND w/OC Outp	Scrnd		14 DIP
74LS09	156-0728-02	A	G	Quad, 2-Inp AND w/OC Outp	Scrnd	4C	14 DIP
74S09	156-1286-00	A	H-	Quad, 2-Inp AND w/OC Outp	Scrnd		14 DIP
7410	156-0047-02	N	G	Triple, 3-Input NAND	Scrnd		14 DIP
7410J	156-0553-00	N	F+	Triple, 3-Input NAND			14 DIP
7410J	156-0553-01	N	F+	Triple, 3-Input NAND	Chkd		14 DIP
74F10	156-1752-00	U		Triple, 3-Input NAND	Scrnd		
74S10	156-0321-02	A	G	Triple, 3-Input NAND	Scrnd		14 DIP
74LS10	156-0386-02	A	G	Triple, 3-Input NAND	Scrnd	5A	14 DIP
7411	156-0163-00	N	F+	Triple, 3-Input AND			14 DIP
7411	156-0163-01	N	F+	Triple, 3-Input AND	Chkd		14 DIP
7411	156-0163-02	N	F+	Triple, 3-Input AND	Scrnd		14 DIP
74F11	156-1663-00	A	H-	Triple, 3-Input AND	Scrnd		14 DIP
74S11	156-0320-03	A	G+	Triple, 3-Input AND	Scrnd		14 DIP
74LS11	156-0481-02	A	G-	Triple, 3-Input AND	Scrnd	4B	14 DIP
7412	156-0144-00	N	G	Triple, 3-Inp NAND w/OC Out		4F	14 DIP
7412	156-0144-01	N	G	Triple, 3-Inp NAND w/OC Out	Chkd		14 DIP
7412	156-0144-02	N	H-	Triple, 3-Inp NAND w/OC Out	Scrnd		14 DIP
7412J	156-0587-00	N	F+	Triple, 3-Inp NAND w/OC Out			14 DIP
7412J	156-0587-01	N	F+	Triple, 3-Inp NAND w/OC Out	Chkd		14 DIP
74LS12	156-0722-02	A	G	Triple, 3-Inp NAND w/OC Out	Scrnd		14 DIP
7413	156-0149-00	N	G-	Dual, 4-Inp NAND Schmit Trg		4G	14 DIP
7413	156-0149-01	N	G-	Dual, 4-Inp NAND Schmit Trg	Chkd		14 DIP
7413	156-0149-02	N	G	Dual, 4-Inp NAND Schmit Trg	Scrnd		14 DIP
7413J	156-0586-00	N	G	Dual, 4-Inp NAND Schmit Trg			14 DIP
7413J	156-0586-01	N	G	Dual, 4-Inp NAND Schmit Trg	Chkd		14 DIP
74S15	156-1680-00	U	G	Triple, 3-Inp AND w/OC Outp	Scrnd		14 DIP
74LS15	156-1267-00	A	G-	Triple, 3-Inp AND w/OC Outp	Scrnd		14 DIP
74LS15	156-1267-01	N	G+	Triple, 3-Inp AND w/OC Outp	Scrnd		14 DIP
7420	156-0034-02	N	G	Dual, 4-Input NAND	Scrnd		14 DIP
7420J	156-0554-00	N	F+	Dual, 4-Input NAND			14 DIP
7420J	156-0554-01	N	F+	Dual, 4-Input NAND	Chkd		14 DIP
74S20	156-0304-02	A	G+	Dual, 4-Input NAND	Scrnd	4D	14 DIP
74LS20	156-0464-02	A	G-	Dual, 4-Input NAND	Scrnd		14 DIP
7421	156-0297-00	N	F+	Dual, 4-Input NAND			14 DIP
7421	156-0297-01	N	F+	Dual, 4-Input NAND	Chkd		14 DIP
7421	156-0297-02	N	G-	Dual, 4-Input NAND	Scrnd		14 DIP
74LS21	156-0478-02	N	G	Dual, 4-Input AND	Scrnd		14 DIP
74S22	156-0404-01	A	G+	Dual, 4-Inp NAND w/OC Outp	Scrnd		14 DIP
74LS22	156-0538-02	A	G	Dual, 4-Inp NAND w/OC Outp	Scrnd		14 DIP
7425	156-0165-02	N	H-	Dual, 4-Input NOR w/Strobe	Scrnd		14 DIP

GATES (CONT)

VENDOR NUMBER	PART NUMBER	** ND	CC	DESCRIPTION	OTHER	†† RC	CASE STYLE
7425J	156-0590-00	N	F+	Dual, 4-Input NOR w/Strobe			14 DIP
7425J	156-0590-01	N	F+	Dual, 4-Input NOR w/Strobe	Chkd		14 DIP
7426	156-0112-00	N	G-	Quad, 2-Inp NAND w/OC Outp		4F	14 DIP
7426	156-0112-01	N	G-	Quad, 2-Inp NAND w/OC Outp	Chkd		14 DIP
7426	156-0112-02	N	G	Quad, 2-Inp NAND w/OC Outp	Scrnd		14 DIP
7426J	156-0584-00	N	G	Quad, 2-Inp NAND w/OC Outp			14 DIP
7426J	156-0584-01	N	G	Quad, 2-Inp NAND w/OC Outp	Chkd		14 DIP
74LS26	156-0970-03	A	G	Quad, 2-Input NAND	Scrnd		14 DIP
7427	156-0178-00	N	F+	Triple, 3-Input NOR			14 DIP
7427	156-0178-01	N	F+	Triple, 3-Input NOR	Chkd		14 DIP
7427	156-0178-02	N	G-	Triple, 3-Input NOR	Scrnd		14 DIP
74LS27	156-0718-03	A	G	Triple, 3-Input NOR	Scrnd	5B	14 DIP
7430	156-0035-02	N	G	Single, 8-Input NAND	Scrnd		14 DIP
7430J	156-0555-00	N	F+	Single, 8-Input NAND			14 DIP
7430J	156-0555-01	N	F+	Single, 8-Input NAND	Chkd		14 DIP
74S30	156-0418-01	A	G+	Single, 8-Input NAND	Scrnd		14 DIP
74LS30	156-0465-02	A	G	Single, 8-Input NAND	Scrnd		14 DIP
7432	156-0171-02	N	G	Quad, 2-Input OR	Scrnd	4C	14 DIP
74F32	156-1724-00	U	H-	Quad, 2-Input OR	Scrnd		14 DIP
74S32	156-0739-02	A	H-	Quad, 2-Input OR	Scrnd	5B	14 DIP
74LS32	156-0479-02	A	G	Quad, 2-Input OR	Scrnd	5B	14 DIP
74LS32	156-0479-04	N	G+	Quad, 2-Input OR	Scrnd		14 DIP
7451	156-0037-00	N	G-	Dual, 2-Wd, 2-In AND/OR Inv		4D	14 DIP
7451	156-0037-01	N	G	Dual, 2-Wd, 2-In AND/OR Inv	Chkd		14 DIP
7451	156-0037-02	N	G-	Dual, 2-Wd, 2-In AND/OR Inv	Scrnd		14 DIP
74S51	156-1040-00	N	G	Dual, 2-Wide, 2-Input AND/ OR Invert		3E	14 DIP
74S51	156-1040-01	N	G	Dual, 2-Wide, 2-Input AND/ OR Invert	Chkd	3E	14 DIP
74S51	156-1040-02	N	G+	Dual, 2-Wide, 2-Input AND/ OR Invert	Scrnd		14 DIP
74LS51	156-0875-02	A	G	Dual, 2-Wide, 2-Input AND/ OR Invert	Scrnd	4B	14 DIP
7454	156-0031-00	N	G-	4-Wide, 2-Input AND/OR Inv			14 DIP
7454	156-0031-01	N	G-	4-Wide, 2-Input AND/OR Inv	Chkd		14 DIP
74LS54	156-0452-02	A	G	4-Wide, 2 & 3-Input AND/OR Invert	Scrnd	4C	14 DIP
74F64	156-1751-00	U		4-2-3-2-Input AND/OR Invert			
74S64	156-0703-01	N	G+	4-Wide, 4-2-3-2-Input AND/ OR Invert	Chkd		14 DIP
74S64	156-0703-02	A	G	4-Wide, 4-2-3-2-Input AND/ OR Invert	Scrnd		14 DIP
74S65	156-1285-00	A	G	AND/OR Invert, 4-2-3-2-Inp w/OC Output	Scrnd		14 DIP
7486	156-0062-00	N	G	Quad, 2-Input EX OR		4C	14 DIP
7486	156-0062-01	N	G	Quad, 2-Input EX OR	Chkd		14 DIP
7486	156-0062-02	N	G	Quad, 2-Input EX OR	Scrnd		14 DIP
74F86	156-1800-00	U		Quad, 2-Input EX OR	Scrnd		14 DIP
74S86	156-0707-03	A	H	Quad, 2-Input EX OR	Scrnd		14 DIP
74LS86	156-0381-02	A	G	Quad, 2-Input EX OR	Scrnd	5B	14 DIP
74132	156-0371-02	N	H-	Quad, 2-Inp NAND, Schmt Inp	Scrnd	4D	14 DIP
74S132	156-0413-02	A	I	Quad, 2-Inp NAND, Schmt Inp	Scrnd		14 DIP
74LS132	156-0721-02	A	G+	Quad, 2-Inp NAND, Schmt Inp	Scrnd	5C	14 DIP
74S133	156-0472-03	A	G+	Single, 3-Input NAND	Scrnd		16 DIP
74LS133	156-0866-00	N	G	Single, 13-Input NAND		4F	16 DIP
74LS133	156-0866-01	N	G	Single, 13-Input NAND	Chkd	4D	16 DIP
74LS133	156-0866-02	A	G	Single, 13-Input NAND	Scrnd	4C	16 DIP
74ALS133	156-1759-00	U		13-Input NAND	Scrnd		
74S134	156-1573-00	A	G+	Triple, 12-Input NAND	Scrnd		16 DIP
74LS136	156-0990-01	A	H	Quad, 2-Inp EX OR w/OC Outp	Scrnd		14 DIP
74S260	156-0966-01	A	H	Dual, 5-Input NOR	Scrnd		14 DIP
74LS260	156-0985-01	A	G+	Dual, 5-Input NOR	Scrnd		14 DIP
74265	156-0696-02	N	I	Quad, Complement Output AND/NAND	Scrnd	4F	16 DIP
74LS266	156-0652-02	A	G	Quad, 2-Inp EX NOR w/OC Out	Scrnd		14 DIP

ATTENTION
OBSERVE PRECAUTIONS FOR HANDLING
ELECTROSTATIC SENSITIVE DEVICES

††FOR RELIABILITY CODES, SEE PAGE 1-16.

THIS APPLIES TO ALL DEVICES ON THIS PAGE.

INTEGRATED CIRCUITS, DIGITAL (CONT)

TTL

FOR LISTING BY FAMILY NUMBERS, SEE PAGES 1-22 THRU 1-25

GENERATORS

VENDOR NUMBER	PART NUMBER	** ND	CC	DESCRIPTION	OTHER	†† RC	CASE STYLE
74180	156-0088-00	N	H-	8-Bit, Odd/Even Gen/Chrk		4E	14 DIP
74180	156-0088-01	N	H-	8-Bit, Odd/Even Gen/Chrk	Chkd		14 DIP
74180	156-0088-02	N	H	8-Bit, Odd/Even Gen/Chrk	Scrnd		14 DIP
74S182	156-0692-00	N	I	Lookahead Carry Generator, Plastic Pkg		3E	16 DIP
74S182	156-0692-01	N	I	Lookahead Carry Generator, Plastic Pkg	Chkd		16 DIP
74S182	156-0692-02	A	I	Lookahead Carry Generator, Plastic Pkg	Scrnd		16 DIP
74S182	156-1048-00	N	I+	Lookahead Carry Generator, Ceramic Pkg			16 DIP
74S182	156-1048-01	N	I+	Lookahead Carry Generator, Ceramic Pkg	Chkd		16 DIP
74S182	156-1048-02	A	J-	Lookahead Carry Generator, Ceramic Pkg	Scrnd		16 DIP
74S280	156-1014-01	N	I+	9-Bit Odd/Even Parity Gen/Chrk	Scrnd		14 DIP
74LS280	156-0915-02	A	I	9-Bit Odd/Even Gen/Chrk	Scrnd		14 DIP
74AS881	156-1703-00	U	M-	4-Bit, ALU/Fctn Generator	Scrnd		24 DIP
82S62	156-1084-00	A	J+	8-Bit, Parity Gen/Chrk			14 DIP

LATCHES

VENDOR NUMBER	PART NUMBER	** ND	CC	DESCRIPTION	OTHER	†† RC	CASE STYLE
25S18	156-1062-00	N	K-	Quad Latch w/STD & 3-State Output			16 DIP
25S18	156-1062-02	N	K-	Quad Latch w/STD & 3-State Output	Scrnd		16 DIP
7475	156-0040-00	N	G	4-Bit Bistable Complement Outputs		4E	16 DIP
7475	156-0040-01	N	G	4-Bit Bistable Complement Outputs	Chkd		16 DIP
7475	156-0040-02	N	G	4-Bit Bistable Complement Outputs	Scrnd		16 DIP
7475J	156-0559-00	N	G+	4-Bit Bistable Complement Outputs			16 DIP
7475J	156-0559-01	N	G+	4-Bit Bistable Complement Outputs	Chkd		16 DIP
74LS75	156-0735-02	A	G+	4-Bit Bistable Complement Outputs	Scrnd	4D	16 DIP
74100	156-0193-00	N	I	8-Bit Latch			24 DIP
74100	156-0193-02	N	I+	8-Bit Latch	Scrnd		24 DIP
74177	156-0536-02	N	I	Preset Binary Cntr/Latch	Scrnd		14 DIP
74197	156-0142-00	N	H-	Preset Decade, Binary Cntr/Latch		4E	14 DIP
74197	156-0142-01	N	H-	Preset Decade, Binary Center/Latch	Chkd		14 DIP
74197J	156-0596-00	N	I-	Preset Decade, Binary Center/Latch			14 DIP
74197J	156-0596-01	N	I-	Preset Decade, Binary Center/Latch	Chkd		14 DIP
74LS259	156-0874-00	N	H	8-Bit Addressable Latch		3H	16 DIP
74LS259	156-0874-02	A	H+	8-Bit Addressable Latch	Scrnd	4C	16 DIP
74279	156-0508-02	N	G+	Quad S-R Latch	Scrnd		16 DIP
74LS279	156-0804-02	A	G+	Quad S-R Latch	Scrnd	4D	16 DIP
74F373	156-1721-00	U	K-	Octal "D" Tran Latch	Scrnd		20 DIP
74S373	156-1250-00	N	J+	Octal "D" Tran Latch		4E	20 DIP
74S373	156-1250-02	A	J	Octal "D" Tran Latch	Scrnd		20 DIP
74LS373	156-1065-00	N	I+	Octal "D" Tran Latch		4D	20 DIP
74LS373	156-1065-01	A	I+	Octal "D" Tran Latch	Scrnd	5A	20 DIP
74LS375	156-1318-00	A	G+	4-Bit Bistable Latch	Scrnd		16 DIP
9334	156-0218-02	N	I-	8-Bit Addressable	Scrnd		16 DIP

LOGIC ARRAYS

VENDOR NUMBER	PART NUMBER	** ND	CC	DESCRIPTION	OTHER	†† RC	CASE STYLE
PAL10L8	156-1801-00	A		Logic Array			20 DIP
PAL16L2	156-1808-00	A		Logic Array			20 DIP
PAL16L8	156-1809-00	A		Logic Array			20 DIP
PAL12L10	156-1802-00	A		Logic Array			24 DIP
82S100	156-1269-00	A	N-	16 x 48 x 8 FPLA w/3-State Output			28 DIP
82S107	156-1254-00	A	N-	FPLA w/3-State Output			28 DIP

MULTIVIBRATORS

VENDOR NUMBER	PART NUMBER	** ND	CC	DESCRIPTION	OTHER	†† RC	CASE STYLE
26S02	156-1195-00	N	I+	Dual, Retrig Monostable		4B	16 DIP
26S02	156-1195-01	N	I+	Dual, Retrig Monostable	Scrnd	4C	16 DIP
MC4024P	156-0121-00	A	J+	Dual, Voltage Controlled			14 DIP
74121	156-0072-02	N	H	Single, Monostable w/ Schmitt Trigger Inputs	Scrnd	4E	14 DIP
74121	156-0562-00	N	H-	Single, Monostable; Ceramic Pkg only			14 DIP
74121	156-0562-01	N	H-	Single, Monostable; Ceramic Pkg only	Chkd		14 DIP
74122	156-0143-02	N	H-	Single, Retrigger w/Clear Monostable	Scrnd		14 DIP
74122J	156-0594-00	N	G+	Single, Retrigger w/Clear Monostable			14 DIP
74122J	156-0594-01	N	G+	Single, Retrigger w/Clear Monostable	Chkd		14 DIP
74123	156-0172-02	N	H-	Dual, Monostable w/Clear Schmitt Trigger Input	Scrnd		16 DIP
74123J	156-0595-00	N	G+	Dual, Monostable w/Clear Schmitt Trigger Input			16 DIP
74123J	156-0595-01	N	G+	Dual, Monostable w/Clear Schmitt Trigger Input	Chkd		16 DIP
74LS123	156-1600-00	A	H-	Dual Monostable Retrigger	Scrnd		16 DIP
74221	156-0706-00	N	H	Dual, Monostable w/Clear Schmitt Trigger Input		4F	16 DIP
74221	156-0706-01	N	H	Dual, Monostable w/Clear Schmitt Trigger Input	Chkd		16 DIP
74221	156-0706-02	N	H	Dual, Monostable w/Clear Schmitt Trigger Input	Scrnd		16 DIP
74LS221	156-0733-02	A	H	Dual, Monostable w/Clear Schmitt Trigger Input	Scrnd	5B	16 DIP
74LS221	156-0733-03	N	H	Dual, Monostable w/Clear Schmitt Trigger Input	Scrnd		16 DIP
9601	156-0081-02	N	H-	One Shot	Scrnd	4D	14 DIP
9601DC	156-0622-00	N	H-	One Shot			14 DIP
9601DC	156-0622-01	N	H+	One Shot	Chkd		14 DIP
9602	156-0405-03	N	I-	Dual, Retriggerable, Resettable - One Sheet	Scrnd		16 DIP
9602DC	156-0623-00	N	H-	Dual, Retriggerable, Resettable - One Sheet			16 DIP
9602DC	156-0623-01	N	H-	Dual, Retriggerable, Resettable, One Shot	Chkd		16 DIP
96S02	156-1645-00	N	I+	Dual, Retriggerable, Resettable, Monostable	Scrnd		16 DIP
96LS02	156-1335-00	A	I	Dual, Retriggerable, Resettable - One Sheet	Scrnd	4D	16 DIP

PROMS

SEE MEMORY SELECTION GUIDE THIS SECTION

RAMS

SEE MEMORY SELECTION GUIDE THIS SECTION

REGISTERS

VENDOR NUMBER	PART NUMBER	** ND	CC	DESCRIPTION	OTHER	†† RC	CASE STYLE
29821	156-1702-00	U		10-Bit Register	Scrnd		24 DIP
29824	156-1736-00	U		9-Bit Register, 3-State			24 DIP

REGISTER FILES

VENDOR NUMBER	PART NUMBER	** ND	CC	DESCRIPTION	OTHER	†† RC	CASE STYLE
74LS170	156-0732-00	A	I-	4 x 4 Register File w/3-State Output			16 DIP
74LS170	156-0732-01	N		4 x 4 Register File w/3-State Output	Chkd		16 DIP
74LS670	156-0989-02	A	I+	4 x 4 Register File	Scrnd		16 DIP

ATTENTION
OBSERVE PRECAUTIONS FOR HANDLING
ELECTROSTATIC SENSITIVE DEVICES

THIS APPLIES TO ALL DEVICES ON THIS PAGE.

** NEW DESIGN RECOMMENDATION FROM COMPONENT ENGINEERING:

A = Acceptable
N = Not Recommended
U = Undefined

INTEGRATED CIRCUITS, DIGITAL (CONT)
TTL

1

VENDOR NUMBER	PART NUMBER	ND **	CC	DESCRIPTION	OTHER	RC ††	CASE STYLE
SHIFT REGISTERS							
2502	156-1456-00	N	K	Successive Approx Register			16 DIP
25L04	156-1792-00	A		Successive Approx Register			24 DIP
7495	156-0120-00	N	G+	4-Bit Right Shift, Left Shift		4G	14 DIP
7495	156-0120-01	N	G+	4-Bit Right Shift, Left Shift	Chkd		14 DIP
7495	156-0120-02	N	G+	4-Bit Right Shift, Left Shift	Scrnd		14 DIP
7495J	156-0602-00	N	G	4- Bit Right Shift, Left Shift			14 DIP
7495J	156-0602-01	N	G	4-Bit Right Shift, Left Shift	Chkd		14 DIP
74LS95	156-0389-00	N	G+	4-Bit Right Shift, Left Shift			16 DIP
74LS95	156-0389-01	N	G+	4-Bit Right Shift, Left Shift	Chkd		16 DIP
74LS95	156-0389-02	A	H-	4-Bit Right Shift, Left Shift	Scrnd		16 DIP
7496	156-0073-02	N	G+	5-Bit, Shift Register	Scrnd		16 DIP
74164	156-0131-00	N	G+	8-Bit, Parallel-Out Serial		4F	14 DIP
74164	156-0131-01	N	G+	8-Bit, Parallel-Out Serial	Chkd		14 DIP
74164	156-0131-02	N	H-	8-Bit, Parallel-Out Serial	Scrnd		14 DIP
74LS164	156-0651-02	A	H	8-Bit, Parallel-Out Serial	Scrnd	4B	14 DIP
74165	156-0146-02	N	H-	8-Bit, Parallel Load	Scrnd		16 DIP
74LS165	156-0789-02	A	H+	8-Bit, Parallel Load	Scrnd		16 DIP
74166	156-0301-02	N	I	8-Bit, Parallel-In, Serial-Output	Scrnd	3E	16 DIP
74LS166	156-1313-00	A	H	8-Bit, Parallel-In, Serial-Output	Scrnd		16 DIP
74LS173	156-0951-02	A	H	4-Bit, D-Type, 3-St Output	Scrnd		16 DIP
74194	156-0697-00	N	G	4-Bit Bi-Directional			16 DIP
74S194	156-0744-00	N	J	4-Bit Bi-Directional		3F	16 DIP
74S194	156-0744-01	N	J	4-Bit Bi-Directional	Chkd		16 DIP
74S194	156-0744-03	N	K-	4-Bit Bi-Directional, Ceramic Pkg only			16 DIP
74S194	156-0744-04	A	J+	4-Bit Bi-Directional Ceramic Pkg only	Scrnd		16 DIP
74LS194	156-0768-00	N	G+	4-Bit Bi-Directional			16 DIP
74LS194	156-0768-01	A	G+	4-Bit Bi-Directional	Scrnd		16 DIP
74195	156-0367-00	N	G	4-Bit, Parallel Access			16 DIP
74195	156-0367-01	N	G	4-Bit, Parallel Access	Chkd		16 DIP
74195	156-0367-02	N	E+	4-Bit, Parallel Access	Scrnd		16 DIP
74S195	156-0326-02	A	I+	4-Bit, Parallel Access	Scrnd		16 DIP
74LS195	156-0376-01	A	H-	4-Bit, Parallel Access	Scrnd		16 DIP
74LS295	156-0734-00	N	H-	4-Bit, Right Shift, Left Shift, 3-State Output		3E	14 DIP
74LS295	156-0734-01	N	H-	4-Bit, Right Shift, Left Shift, 3-State Output	Chkd		14 DIP
74LS295	156-0734-02	A	H	4-Bit, Right Shift, Left Shift, 3-State Output	Scrnd		14 DIP
74S299	156-1197-00	N	L-	8-Bit Universal Shift/ Storage			20 DIP
74S299	156-1197-01	N	L-	8-Bit Universal Shift/ Storage	Scrnd		20 DIP
74LS299	156-0975-02	A	J+	8-Bit Universal Shift/ Storage w/3-State Output	Scrnd	4D	20 DIP
74LS299	156-0975-03	N	J+	8-Bit Universal Shift/ Storage w/3-State Output	Scrnd		20 DIP
74LS322	156-1481-00	A	K-	8-Bit w/Sign Extender	Scrnd		20 DIP
74F399	156-1634-00	A	J	Quad, 2-Input, 4-Bit Regis	Scrnd		16 DIP
82S70	156-1328-00	N	J+	4-Bit Register	Scrnd	2J	14 DIP
8551	156-0398-00	N	G+	4-Bit, D-Type w/3-State Output			16 DIP
86LS62	156-1251-00	N	K-	Dual Rank 8-Bit w/3-State Output	Scrnd		18 DIP
93L28	156-0310-00	N	I+	Dual, 8-Bit	Scrnd		16 DIP
93L28	156-0310-02	N	I+	Dual, 8-Bit			16 DIP
MISCELLANEOUS							
74S124	156-1584-00	N	J-	Dual VCO	Scrnd		16 DIP
74LS629	156-0861-01	A	I	Dual VCO	Scrnd		16 DIP

PART NUMBER	TITLE
TECHNICAL SHEETS	
062-2318-00	Circuit Board Standards Marking Adherence and Solder Flux Cleaning
062-2985-00	Microcircuit Quality Level Requirements
062-3448-00	Protective Packaging for shipment and storage of static-sensitive microcircuits
062-3728-00	Microcircuit mechanical and environmental requirements
062-3798-00	Outline drawings for dual in-line and flatpack purchased microcircuits
062-3919-00	Digital microcircuit screening requirements for TTL, STTL, LSTTL, HTTL, LTTL.
062-3924-00	Digital microcircuit screening requirements for MOS
062-3942-00	Microcircuit screening requirements for ECL
062-3953-00	General reliability requirements for purchased microcircuits.
062-4099-00	Digital microcircuit screening requirements for MOS DRAMs.
062-4113-00	Digital microcircuit screening requirements for Bipolar RAMs
062-4188-00	Digital microcircuit screening requirements for NMOS ROMs
062-4385-00	Digital microcircuit screening requirements with dynamic burn-in for MOS
062-4385-01	Digital microcircuit screening requirements with dynamic burn-in (72 hour minimum)
062-5863-00	Quality and reliability requirements for high reliability MOS and Bipolar RAMs and MROMs
062-5875-00	Screening requirements for EPROMs
062-5876-00	Quality and reliability requirements for EPROMs

THIS APPLIES TO ALL DEVICES ON THIS PAGE

** NEW DESIGN RECOMMENDATION FROM COMPONENT ENGINEERING:
A = Acceptable
N = Not Recommended

NOTES

1

†† CATALOG RELIABILITY CODES

USAGE/YR	CODE
≥10	1
≥100	2
≥1 000	3
≥10 000	4
≥100 000	5
≥1 000 000	6
≥10 000 000	7

FAILURE FREQ	CODE		%/YR (median)
1/100 000	A	=	.001
1/50 000	B	=	.002
1/20 000	C	=	.005
1/10 000	D	=	.01
1/5 000	E	=	.02
1/2 000	F	=	.05
1/1 000	G	=	.1
1/500	H	=	.2
1/200	I	=	.5
1/100	J	=	1.0+

For further explanation of this code, see page 4-72.

COST CODE

(CC COLUMN)

CODE	≈ VALUE with -	≈ VALUE no suffix	≈ VALUE with +
A	.2¢	.5¢	.75¢
B	1.25¢	1.5¢	2¢
C	2.5¢	3¢	3.75¢
D	4.25¢	5¢	6¢
E	7¢	8¢	10¢
F	13¢	15¢	18¢
G	22¢	25¢	35¢
H	40¢	50¢	60¢
I	65¢	75¢	$1
J	$1.25	$1.50	$2
K	$2.50	$3	$3.75
L	$4.25	$5	$6
M	$7	$8	$10
N	$13	$15	$18
O	$22	$25	$35+

NOTE: Costs may vary from order to order due to order quantities, vendor, etc.

TTL FAMILY NUMBER LISTING

FOR LISTING BY FUNCTION, SEE PAGES 1-14 THRU 1-20.

STANDARD

VENDOR NUMBER	PART NUMBER	DESCRIPTION	CASE STYLE
PAL10L8	156-1801-XX	Logic Array	20 DIP
PAL12L6	156-1677-XX	Gate, Hex, 12-Input AND/OR	20 DIP
PAL12L20	156-1802-XX	Logic Array	20 DIP
PAL14L4	156-1669-XX	Gate, Quad, 14-Input AND/OR	20 DIP
PAL16L2	156-1808-XX	Logic Array	20 DIP
PAL16R4CJ	156-1659-XX	Gate, Quad, 16-Input AND/OR	20 DIP
PAL16R6	156-1637-XX	Gate, 16-Input AND/OR	20 DIP
PAL16L8	156-1809-XX	Logic Array	20 DIP
PAL16R8CJ	156-1658-XX	Gate, Octal, 16-Input AND/OR	20 DIP
UHP408	156-1528-XX	Driver, Quad, 2-Input NAND	14 DIP
8T06	156-0379-XX	Decoder/Driver, BCD to 7 Segment	16 DIP
8T09	156-0851-XX	Driver, Quad, Bus	14 DIP
8T13	156-0273-XX	Driver, Dual Line	16 DIP
8T15	156-0997-XX	Driver, Dual Line	14 DIP
8T16	156-0995-XX	Driver, Dual Line, Communication Line	14 DIP
8T26	156-0996-XX	Transceiver, Quad Bus, 3-State	16 DIP
8T95	156-1018-XX	Buffer, Hex, 3-State Comm Disable	16 DIP
8T97	156-0998-XX	Buffer, Hex, 3-State, Sep. Disable	16 DIP
8T98	156-0999-XX	Buffer, Hex, 3-State, Inverter	16 DIP
1488	156-0879-XX	Driver, Quad Line	14 DIP
1489L	156-0878-XX	Receiver, Quad Line	14 DIP
2502	156-1456-XX	Register, Successive Approximate	16 DIP
3245	156-0992-XX	Driver, Quad TTL to MOS	16 DIP
3440P	156-1219-XX	GPIB Transceiver	16 DIP
3441P	156-0600-XX	Transceiver, Quad Bus	16 DIP
3446	156-0849-XX	Transceiver, Quad Interface Bus	16 DIP
3448	156-1133-XX	Driver, Quad Line	14 DIP
3459	156-0740-XX	Driver, Quad NAND Address Line	14 DIP
4018P	156-0202-XX	Counter, Program Mod-N Hex	16 DIP
4022P	156-0372-XX	Comparator, Dual 4-Bit	16 DIP
4024P	156-0121-XX	Multivibrator, Dual Voltage-Control	14 DIP
4035P	156-0198-XX	Latch, Quad (OC)	14 DIP
4044P	156-0124-XX	Detector, Phase/Frequency	14 DIP
4048P	156-0159-XX	Decoder, Non-Inverter 1-of-8	16 DIP
6118	156-1649-XX	Driver, Fluorescent Display	18 DIP
7400	156-0030-XX	Gate, Quad, 2-Input NAND	14 DIP
7400J	156-0549-XX	Gate, Quad, 2-Input NAND	14 DIP
7401	156-0057-XX	Gate, Quad, 2-Input NAND (OC)	14 DIP
7401J	156-0550-XX	Gate, Quad, 2-Input NAND	14 DIP
7402	156-0043-XX	Gate, Quad, 2-Input NOR	14 DIP
7402J	156-0551-XX	Gate, Quad, 2-Input NOR	14 DIP
7403	156-0186-XX	Gate, Quad, 2-Input NOR (OC)	14 DIP
7404	156-0058-XX	Inverter, Hex	14 DIP
7404J	156-0552-XX	Inverter, Hex	14 DIP
7405	156-0092-XX	Inverter, Hex (5.5V OC)	14 DIP
74H05	156-0922-XX	Inverter, Hex	14 DIP
7406	156-0153-XX	Buffer, Hex Inverter (30V OC)	14 DIP
7406J	156-0611-XX	Inverter, Hex	14 DIP
7407	156-1080-XX	Buffer, Hex 2/O-C, HV	14 DIP
7408	156-0129-XX	Gate, Quad, 2-Input AND	14 DIP
7408J	156-0588-XX	Gate, Quad, 2-Input AND	14 DIP
7409	156-0460-XX	Gate, Quad, 2-Input AND	14 DIP
7410	156-0047-XX	Gate, Triple, 3-Input NAND	14 DIP
7410J	156-0553-XX	Gate, Triple, 3-Input NAND	14 DIP
7411	156-0163-XX	Gate, Triple, 3-Input AND	14 DIP
7412	156-0144-XX	Gate, Triple, 3-Input NAND (5.5V OC)	14 DIP
7412J	156-0587-XX	Gate, Triple, 3-Input NAND (5.5V OC)	14 DIP
7413	156-0149-XX	Gate, Dual, 4-Input NAND Schmitt	14 DIP
7413J	156-0586-XX	Gate, Dual 4-Input NAND Schmitt	14 DIP
7414	156-0462-XX	Gate/Inverter, Hex, Schmitt Trigger	14 DIP
7416	156-0093-XX	Buffer, Hex Inverter	14 DIP
7416J	156-0585-XX	Buffer, Hex Inverter	14 DIP
7417	156-0140-XX	Buffer, Hex (15V OC, 40mA)	14 DIP
7417J	156-0589-XX	Buffer, Hex (15V OC, 40mA)	14 DIP
7420	156-0034-XX	Gate, Dual, 4-Input NAND	14 DIP
7420J	156-0554-XX	Gate, Dual, 4-Input NAND	14 DIP
74H20	156-1169-XX	Gate, Dual, 4-Input NAND	14 DIP
7421	156-0297-XX	Gate, Dual, 4-Input AND	14 DIP
74H21	156-1050-XX	Gate, Dual, 4-Input AND	14 DIP
7425	156-0165-XX	Gate, Dual, 4-Input NOR with Strobe	14 DIP
7425J	156-0590-XX	Gate, Dual, 4-Input NOR with Strobe	14 DIP
7426	156-0112-XX	Gate, Quad, 2-Input NAND	14 DIP
7426J	156-0584-XX	Gate, Quad, 2-Input NAND	14 DIP
7427	156-0178-XX	Gate, Triple, 3-Input NOR	14 DIP
7428	156-0374-XX	Buffer, Quad, 2-Input NOR (48mA)	14 DIP

VENDOR NUMBER	PART NUMBER	DESCRIPTION	CASE STYLE
7430	156-0035-XX	Gate, Single, 8-Input NAND	14 DIP
7430J	156-0555-XX	Gate, Single, 8-Input NAND	14 DIP
7432	156-0171-XX	Gate, Quad, 2-Input OR	14 DIP
7433	156-0424-XX	Buffer, Quad, 2-Input NOR	14 DIP
7437	156-0150-XX	Buffer, Quad, 2-Input NAND	14 DIP
7437J	156-0591-XX	Buffer, Quad, 2-Input NAND (48mA)	14 DIP
7438	156-0145-XX	Buffer, Quad, 2-Input NAND	14 DIP
7438J	156-0592-XX	Buffer, Quad, 2-Input NAND	14 DIP
7440	156-0036-XX	Buffer, Dual, 4-Input NAND	14 DIP
7442	156-0061-XX	Decoder, BCD-to-Decimal	16 DIP
7442J	156-0556-XX	Decoder, BCD-to-Decimal	16 DIP
7447	156-0128-XX	Decoder/Driver, BCD-to-7 Segment	
7451	156-0037-XX	Gate, Dual, 2-Wide, 2-Input AOI	14 DIP
7454	156-0031-XX	Gate, 4-Wide, 2-Input AOI	14 DIP
7472	156-0038-XX	Flip-Flop, Dual, J-K Master/Slave	14 DIP
7473	156-0039-XX	Flip-Flop, Dual, J-K Master/Slave	14 DIP
7473J	156-0557-XX	Flip-Flop, Dual, J-K Master/Slave	14 DIP
7474	156-0041-XX	Flip-Flop, Dual D	14 DIP
74F74	156-1611-XX	Flip-Flop, Dual D	14 DIP
7474J	156-0558-XX	Flip-Flop, Dual D	14 DIP
7475	156-0040-XX	Latch, Quad	16 DIP
7475J	156-0559-XX	Latch, Quad	16 DIP
7476	156-0042-XX	Flip-Flop, Dual, J-K Master/Slave	16 DIP
7476J	156-0560-XX	Flip-Flop, Dual, J-K Master/Slave	16 DIP
7483	156-0087-XX	Adder, 4-Bit Binary Gate Full	16 DIP
7485	156-0123-XX	Comparator, 4-Bit Magnitude	14 DIP
7486	156-0062-XX	Gate, Quad, 2-Input EXCL-OR	14 DIP
7490	156-0079-XX	Counter, Decade	14 DIP
7490A	156-0395-XX	Counter, Decade (32 MHz)	14 DIP
7492	156-0114-XX	Counter, Divide-by-12	14 DIP
7493	156-0032-XX	Counter, 4-Bit Binary	14 DIP
7493J	156-0561-XX	Counter, 4-Bit Binary	14 DIP
7495	156-0120-XX	Register, 4-Bit Right-Shift, Left-Shift	14 DIP
7495J	156-0602-XX	Register, 4-Bit Par-ACS Shift	14 DIP
7496	156-0073-XX	Register, 5-Bit Shift	16 DIP
7497	156-0311-XX	Multiplier, 6-Bit Binary Rate	16 DIP
8090	156-0406-XX	Buffer, Quad, Inv/Dual, 2-Input NAND	16 DIP
8092	156-0473-XX	Gate, Dual, 5-Input NAND	16 DIP
8094	156-0396-XX	Buffer, Quad, 2-Input, 3-State Output	16 DIP
8097	156-0535-XX	Buffer, 3-State, Hex	16 DIP
8130	156-0537-XX	Comparator, 10-Bit	24 DIP
8136N	156-0539-XX	Comparator, 6-Bit Unified Bus	16 DIP
8201	156-0601-XX	Buffer/Inverter, Dual, 5-Bit Inv Input	24 DIP
8202	156-0250-XX	Register, 10-Bit	24 DIP
8224	156-0945-XX	Generator/Driver, Clock	16 DIP
8234	156-0336-XX	Multiplexer, Quad, 2-Input	16 DIP
8271	156-0919-XX	Register, 4-Bit Shift	16 DIP
8273B	156-0497-XX	Register, Shift, 10-Bit, Ser-In, Par-Out	16 DIP
8274B	156-0498-XX	Register, Shift, 10-Bit, Par-In, Ser-Out	16 DIP
8290	156-0097-XX	Counter, Decade (Selected for 55 MHz)	14 DIP
8551	156-0398-XX	Latch, Quad, 3-State Output	16 DIP
8556	156-1054-XX	Counter, Programmed Decade/Binary	16 DIP
8654	156-1454-XX	Driver, 8-Output Display	18 DIP
88L12	156-1347-XX	Hex Inverter, Interface Gate	14 DIP
8815	156-1053-XX	Gate, Dual, 4-Input	14 DIP
8831	156-0506-XX	Driver, Quad, Single End-Dual Diff Input	16 DIP
8833	156-0531-XX	Transceiver, Quad, Unified Bus	16 DIP
8836	156-0456-XX	Receiver, Quad, 2-Input NOR Bus	14 DIP
8837	156-0455-XX	Receiver, Hex Bus	16 DIP
8838	156-0653-XX	Transceiver, Quad, Unified Bus Inv.	16 DIP
8856	156-1110-XX	Driver, LED, BCD-to-7 Segment	16 DIP
8863	156-1407-XX	Driver, MOS to LED 8-Digit Display	18 DIP
8880	156-0284-XX	Decoder/Driver, BCD-to-7 Segment (DD700)	16 DIP
9300PC	156-0083-XX	Register, 4-Bit	16 DIP
9304	156-0148-XX	Adder, Dual, Full	16 DIP
9310PC	156-0084-XX	Counter, Sync Decade (74160)	16 DIP
9334	156-0218-XX	Latch, 8-Bit Addressable	16 DIP
9368PC	156-0493-XX	Decoder/Driver, BCD-to-7 Segment	16 DIP
9401	156-0969-XX	Generator/Checker, Redundancy	14 DIP
9601	156-0081-XX	Multivibrator, Retriggered, Monostable	14 DIP
9601DC	156-0622-XX	Multivibrator, Retriggered, Monostable	14 DIP
9602	156-0405-XX	Multivibrator, Dual, Retrig, Monostable	14 DIP
9602DC	156-0623-XX	Multivibrator, Dual, Retrig, Monostable	14 DIP
9614	156-0275-XX	Driver, Dual Differential Line	16 DIP
9615	156-0274-XX	Receiver, Dual Differential Line	16 DIP

TTL FAMILY NUMBER LISTING (CONT)

FOR LISTING BY FUNCTION, SEE PAGES 1-14 THRU 1-20.

STANDARD (CONT)

VENDOR NUMBER	PART NUMBER	DESCRIPTION	CASE STYLE
9616	156-1544-XX	Driver, Triple Line	14 DIP
29821	156-1702-XX	Register, Shift, 10-Bit, 3-State Output	24 DIP
74100	156-0193-XX	Latch, 8-Bit	24 DIP
74107	156-1083-XX	Flip-Flop, Dual, J-K, M/S with Clear	14 DIP
74109	156-1015-XX	Flip-Flop, Dual, J-K with Preset Clear	16 DIP
74111	156-0174-XX	Flip-Flop, Dual, J-K M/S with Data Lock	16 DIP
74111J	156-0593-XX	Flip-Flop, Dual, J-K M/S with Data Lock	16 DIP
74121	156-0072-XX	Multivibrator, Monostable (One-shot)	14 DIP
74121J	156-0562-XX	Multivibrator, Monostable (One-shot)	14 DIP
74122	156-0143-XX	Multivibrator, Retrig, One-shot w/Clear	14 DIP
74122J	156-0594-XX	Multivibrator, Retrig, One-shot w/Clear	14 DIP
74123	156-0172-XX	Multivib, Dual, Retrig, One-shot w/Clear	16 DIP
74123J	156-0595-XX	Multivib, Dual, Retrig, One-shot w/Clear	16 DIP
74128	156-0451-XX	Buffer, Quad, 2-Input NOR (48mA)	14 DIP
74128J	156-0613-XX	Buffer, Quad, 2-Input NOR (48mA)	14 DIP
74132	156-0371-XX	Gate/Inv, Quad 2-Inp NAND, Schmitt Trig	16 DIP
74145	156-0111-XX	Decoder/Driver, BCD-to-Decimal	16 DIP
74145J	156-0598-XX	Decoder/Driver, BCD-to-Decimal	16 DIP
74147	156-0347-XX	Encoder, 10-Line to 4-Line	16 DIP
74148	156-0219-XX	Encoder, 8-Line to 3-Line	16 DIP
74150	156-0299-XX	Selector, 16-Bit Data	24 DIP
74150J	156-0597-XX	Selector, 16-Bit Data	24 DIP
74151A	156-0075-XX	Selector, 8-Bit Data with Strobe	14 DIP
74151J	156-0563-XX	Selector, 8-Bit Data with Strobe	14 DIP
74P151	156-1746-XX	Multiplexer, 8-Bit	16 DIP
74153	156-0098-XX	Selector/Multiplexer, Dual 4-to-1 Data	16 DIP
74154	156-0078-XX	Decoder/Demultiplexer, 1-of-16	24 DIP
74154J	156-0564-XX	Decoder/Demultiplexer, 1-of-16	24 DIP
74155	156-0110-XX	Decoder/Demultiplexer, Dual 2-4 Line	16 DIP
74156	156-0141-XX	Decoder/Demultiplexer, Dual 2-4 Line	16 DIP
74157	156-0125-XX	Multiplexer, Quad, 2-Input (FSC9322)	16 DIP
74159	156-0929-XX	Decoder/Demultiplexer, 4-16 Line	24 DIP
74161	156-0117-XX	Counter, 4-Bit Binary Sync	16 DIP
74163	156-0248-XX	Counter, 4-Bit Binary S-nc	16 DIP
74164	156-0131-XX	Register, 8-Bit Shift, Ser-In, Par-Out	14 DIP
74165	156-0146-XX	Register, 8-Bit Shift, Par-In, Ser-Out	16 DIP
74166	156-0301-XX	Register, 8-Bit Shift, Par-In, Ser-Out	16 DIP
74174	156-0222-XX	Flip-Flop, Hex D with Clear	16 DIP
74175	156-0221-XX	Latch, Quad D with Clear	16 DIP
74177	156-0536-XX	Counter/Latch, Preset Binary	14 DIP
74180	156-0088-XX	Generator/Checker, 8-Bit Parity	14 DIP
74181	156-0351-XX	Logic Unit, Arithmetic	24 DIP
74184	156-0315-XX	Converter, BCD-to-Binary Code	16 DIP
74185	156-0345-XX	Converter, Binary-to-BCD	16 DIP
74190	156-0340-XX	Counter, Sync BCD Up/Down	16 DIP
74191	156-0175-XX	Counter, Sync Up/Down, 4-Bit	16 DIP
74192	156-0127-XX	Counter, Sync Up/Down BCD	16 DIP
74193	156-0089-XX	Counter, Sync Up/Down, 4-Bit	16 DIP
74193J	156-0565-XX	Counter, Sync Up/Down, 4-Bit	16 DIP
74194	156-0697-XX	Register, 4-Bit Shift	16 DIP
74195	156-0367-XX	Register, 4-Bit Parallel Access Shift	16 DIP
74197	156-0142-XX	Counter/Latch, Presettable Binary	14 DIP
74197J	156-0596-XX	Counter/Latch, Presettable Binary	14 DIP
74221	156-0706-XX	Multivib, Dual Monostable w/Schmitt Trig	16 DIP
74251	156-0397-XX	Selector, 8-Bit Data, 3-State Output	16 DIP
74265	156-0696-XX	Gate, Quad Complimentary Out AND/NAND	16 DIP
74273	156-1708-XX	Flip-Flop, Octal D-Type	20 DIP
74279	156-0508-XX	Latch, Quad, R - S	16 DIP
74298	156-0373-XX	Multiplexer, Quad, 2-Input with Store	16 DIP
74365N	156-1187-XX	Driver, Hex Bus with 3-State Output	16 DIP
74390	156-0626-XX	Counter, Dual, Decade	16 DIP
74393	156-0617-XX	Counter, Dual, 4-Bit	14 DIP
75107A	156-0177-XX	Receiver, Dual Line	16 DIP
75110	156-1523-XX	Driver, Dual Line	14 DIP
75150	156-0139-XX	Driver, Dual Line	8 DIP
75152	156-0934-XX	Receiver, Dual Line	16 DIP
75154	156-0138-XX	Receiver, Line	16 DIP
75160	156-1414-XX	Transceiver, Octal Bus Data	20 DIP
75161	156-1415-XX	Transceiver, Octal Bus Transfer	20 DIP
75162	156-1459-XX	Bus, GPIB Management Circuit	22 DIP
75183	156-0181-XX	Driver, Dual Line	16 DIP
75325	156-0206-XX	Driver	16 DIP
75402	156-1587-XX	Driver, Dual Peripheral NAND	14 DIP
75451	156-0094-XX	Driver, Dual, 2-Input NAND	8 DIP
75452	156-0302-XX	Driver, Dual,2-Input NAND	8 DIP

STANDARD (CONT)

VENDOR NUMBER	PART NUMBER	DESCRIPTION	CASE STYLE
75453	156-0341-XX	Driver, Dual, 2-Input OR	8 DIP
75454	156-0313-XX	Driver, Dual, 2-Input NOR	8 DIP
75494	156-0888-XX	Driver, Hex Digit	16 DIP

SCHOTTKY

VENDOR NUMBER	PART NUMBER	DESCRIPTION	CASE STYLE
8T95	156-1018-XX	Buffer, Hex, Common Disable	16 DIP
8T97	156-0998-XX	Buffer, Hex, Separate Disable	16 DIP
8T98	156-0999-XX	Buffer, Hex, 3-State, Inverter	16 DIP
25S18	156-1062-XX	Latch, Quad, Dual with STD and 3-St Out	16 DIP
26S02	156-1195-XX	Multivib, Dual Retrig/Reset Monostable	16 DIP
26S10	156-1747-XX	Transceiver, Quad Bus	16 DIP
26S12	156-0483-XX	Transceiver, Quad Bus	16 DIP
74S00	156-0180-XX	Gate, Quad, 2-Input NAND	14 DIP
74S02	156-0690-XX	Gate, Quad, 2-Input	14 DIP
74S03	156-0303-XX	Gate, Quad, 2-Input NAND	14 DIP
74S04	156-0323-XX	Inverter, Hex	14 DIP
74S05	156-0403-XX	Inverter, Hex	14 DIP
74S08J	156-0459-XX	Gate, Quad, 2-Input AND	14 DIP
74S09	156-1286-XX	Gate, Quad, 2-Input AND with OC Output	14 DIP
74S10	156-0321-XX	Gate, Triple, 2-Input NAND	14 DIP
74S11	156-0320-XX	Gate, Triple, 3-Input AND	14 DIP
74S15	156-1680-XX	Gate, Triple, 3-Input AND with OC Output	14 DIP
74S20	156-0304-XX	Gate, Dual, 4-Input NAND	14 DIP
74S22	156-0404-XX	Gate, Dual, 4-Input NAND	
74S30	156-0418-XX	Gate, 8-Input NAND	14 DIP
74S32	156-0739-XX	Gate, Quad, 2-Input	14 DIP
74S37	156-1216-XX	Buffer, Quad, 2-Input NAND	14 DIP
74S38	156-1393-XX	Buffer, Quad, 2-Input NAND	14 DIP
74S51	156-1040-XX	Gate, Dual, 2-Wide, 2-Input AND/OR Inv	14 DIP
74S64	156-0703-XX	Gate, 4-2-3-2-Input AND/OR	14 DIP
74S65	156-1285-XX	Gate, AND/OR Inv 4-2-3-2 with OC Output	14 DIP
74S74	156-0331-XX	Flip-Flop, Dual Differential	14 DIP
74S85	156-1041-XX	Comparator, 4-Bit Magnitude	16 DIP
74S86	156-0707-XX	Gate, Quad, 2-Input EXCL OR	14 DIP
Z8103	156-1597-XX	Transceiver, Octal Bus	20 DIP
82S62	156-1084-XX	Generator/Checker, 8-Bit Parity	14 DIP
82S70	156-1328-XX	Register, 4-Bit	14 DIP
82S90	156-0482-XX	Counter, Presettable Decade	14 DIP
93S10	156-1394-XX	Counter, Sync 4-Bit Binary	16 DIP
93S47	156-1063-XX	Comparator, 6-Bit	16 DIP
96S02	156-1645-XX	Multivibrator, Dual Monostable	16 DIP
74S109	156-1061-XX	Flip-Flop, Dual J-K with Preset	16 DIP
74S112	156-0118-XX	Flip-Flop, Dual J-K	16 DIP
74S113	156-1629-XX	Flip-Flop, Dual J-K with Preset	14 DIP
74S124	156-1584-XX	Oscillator Voltage Control, Dual	16 DIP
74S132	156-0413-XX	Gate, Quad, 2-Input Schmitt Trigger	14 DIP
74S133	156-0472-XX	Gate, 13-Input NAND	16 DIP
74S134	156-1573-XX	Gate, Triple, 12-Input NAND	16 DIP
74S138	156-0694-XX	Decoder/Demultiplexer	16 DIP
74S139	156-0693-XX	Decoder/Demultiplexer	16 DIP
74S140	156-0419-XX	Driver, 4-Input NAND 500 Line	14 DIP
74S151	156-0324-XX	Selector/Multiplexer, 8-Input Data	16 DIP
74S153	156-0325-XX	Selector/Multiplexer, Dual 4-to-1 Line	16 DIP
74S157	156-1064-XX	Multiplexer, Quad 2-1	16 DIP
74S158	156-1351-XX	Selector/Multiplexer, Quad 2-1 Line Data with Inverter Output	16 DIP
74S161	156-1044-XX	Counter, Binary, 4-Bit Sync	16 DIP
74S163	156-1198-XX	Counter, 4-Bit Sync	16 DIP
74S169	156-0765-XX	Counter, Sync Up/Down Binary	16 DIP
74S174	156-0738-XX	Flip-Flop, Quad Hex with Clear	16 DIP
74S175	156-0948-XX	Flip-Flop, Quad Hex with Clear	16 DIP
74S181	156-1196-XX	Generator, ALU/Function	24 DIP
74S182	156-0692-XX	Generator, Look Ahead Carry	16 DIP
74S182	156-1048-XX	Generator, Look Ahead Carry	16 DIP
74S194	156-0744-XX	Register, 4-Bit BiDirect Univ. Shift	16 DIP
74S195	156-0326-XX	Register, 4-Bit Parity I/O Shift	16 DIP
74S196	156-0883-XX	Counter, 100 MHz Preset Decade & Binary	14 DIP
74S197	156-1183-XX	Counter, Latch, Presettable Binary	14 DIP
74S240	156-1058-XX	Buffer, Octal with 3-State Output	20 DIP
74S241	156-1179-XX	Buffer, Octal with 3-State Output	20 DIP
74S257	156-0522-XX	Multiplexer, Quad 2-Input w/3-State Out	16 DIP

NOTE: For Cost and Reliability Codes(++), See Pages 1-14 and 1-20.

TTL FAMILY NUMBER LISTING (CONT)

SCHOTTKY (CONT)

VENDOR NUMBER	PART NUMBER	DESCRIPTION	CASE STYLE
74S258	156-1547-XX	Selector/Multiplexer, Quad 2-to-1 Line	16 DIP
74S260	156-0966-XX	Gate, Dual, 5-Input NOR	14 DIP
74S280	156-1014-XX	Generator/Checker	14 DIP
74S283	156-1292-XX	4-Bit Binary Adder	16 DIP
74S299	156-1197-XX	Regulator, 8-Bit Univ. Shift/Store	20 DIP
74S373	156-1250-XX	Latch, Octal D-Type	20 DIP
74S374	156-1046-XX	Flip-Flop, Octal, D-Type with Enable	20 DIP
74S381	156-0691-XX	Generator, ALU/Function	20 DIP
74S399	156-1634-XX	Register, 4-Bit Quad	16 DIP
74AS804	156-1619-XX	Driver, Hex, 2-Input NOR	20 DIP
82S100	156-1269-XX	16 x 48 x 8 FLPA w/OC Output	28 DIP
82S107	156-1254-XX	FLPA with 3-State Output	28 DIP
29827	156-1840-XX	10-Bit Bus Buffer	24 DIP

LOW POWER SCHOTTKY

VENDOR NUMBER	PART NUMBER	DESCRIPTION	CASE STYLE
8TLS95	156-1277-XX	Buffer, Octal, 3-State Output	20 DIP
8TLS97	156-0916-XX	Buffer, Octal, 2-Input, 3-State Output	20 DIP
8TLS98	156-1479-XX	Buffer, Octal, 3-State, Inverter	20 DIP
26LS30	156-1316-XX	Driver, Quad, 3-State, Angle End	16 DIP
26LS32	156-1315-XX	Receiver, Quad Differential	16 DIP
26LS31	156-1681-XX	Driver, Quad Differential	16 DIP
AM2908	156-1618-XX	Transceiver, Quad Bus with Intfc Logic	20 DIP
2909DC	156-1029-XX	Address Controller, 4-Bit	28 DIP
74LS00	156-0382-XX	Gate, Quad, 2-Input NAND	14 DIP
74LS02	156-0383-XX	Gate, Quad, 2-Input NOR	14 DIP
74LS03	156-0384-XX	Gate, Quad, 2-Input NAND	14 DIP
74LS04	156-0385-XX	Inverter, Hex	14 DIP
74LS05	156-0724-XX	Inverter, Hex with OC Output	14 DIP
74LS08	156-0480-XX	Gate, Quad, 2-Input AND	14 DIP
74LS09	156-0728-XX	Gate, Quad, 2-Input AND with OC Output	14 IDP
74LS10	156-0386-XX	Gate, Triple, 3-Input NAND	14 DIP
74LS11	156-0481-XX	Gate, Triple, 3-Input AND	14 DIP
74LS12	156-0722-XX	Gate, Triple, 3-Input NAND w/OC Output	14 DIP
74LS13	156-1276-XX	Gate, Dual, 4-Input NAND, Schmitt Trig.	14 DIP
74LS14	156-0645-XX	Inverter, Hex, Schmitt Trigger	14 DIP
74LS15	156-1267-XX	Gate, Triple, 3-Input NAND w/OC Output	14 DIP
74LS20	156-0464-XX	Gate, Dual, 4-Input NAND	14 DIP
74LS21	156-0478-XX	Gate, Dual, 4-Input AND	14 DIP
74LS22	156-0538-XX	Gate, Dual, 4-Input NAND (OC)	14 DIP
74LS26	156-0970-XX	Buffer, Quad, 2-Input NAND	14 DIP
74LS27	156-0718-XX	Gate, Triple, 3-Input NOR	14 DIP
74LS30	156-0465-XX	Gate, 8-Input NAND	14 DIP
74LS32	156-0479-XX	Gate, Quad, 2-Input OR	14 DIP
74LS33	156-0730-XX	Buffer, Quad 2-Input NOR w/OC Output	14 DIP
74LS37	156-0466-XX	Buffer, Quad, 2-Input NAND	14 DIP
74LS38	156-0467-XX	Buffer, Quad, 2-Input NAND w/OC Output	14 DIP
74LS42	156-0736-XX	Decoder, BCD-to-Decimal	16 DIP
74LS47	156-1243-XX	BCD to 7 Segment Decoder/Driver	16 DIP
74LS51	156-0875-XX	Gate, Dual, 2-Wide, 2-Input AOI	14 DIP
74LS54	156-0452-XX	Gate, 4-Wide, 2-& 3-Input AOI	14 DIP
74LS73	156-0387-XX	Flip-Flop, Dual J-K	14 DIP
74LS74	156-0388-XX	Flip-Flop, Dual D	14 DIP
74LS75	156-0735-XX	Latch, 4-Bit Bistable	16 DIP
74LS76	156-0731-XX	Flip-Flop, Dual, J-K M/S with Clear	16 DIP
74LS85	156-0953-XX	Comparator, 4-Bit Magnitude	16 DIP
74LS86	156-0381-XX	Gate, Quad, 2-Input EXCL OR	14 DIP
74LS90	156-0656-XX	Counter, Decade	14 DIP
74LS92	156-1108-XX	Counter, Divided by 12	14 DIP
74LS93	156-0646-XX	Counter, 4-Bit Binary	14 DIP
74LS95	156-0389-XX	Register, 4-Bit Right Shift, Left Shift	16 DIP
74LS96	156-1275-XX	Register, 5-Bit Shift	16 DIP
81LS95	156-1277-XX	Buffer, 8, 3-State	20 DIP
81LS97	156-0916-XX	Buffer, 8, 2-Input, 3-State	20 DIP
81LS98	156-1479-XX	Buffer, Octal Inverter, 3-State	20 DIP
86LS62	156-1251-XX	Register, Dual Rank, 8-Bit w/3-St Outpt	18 DIP
96LS02	156-1335-XX	Multivibrator, Dual Retrig, Resettable	16 DIP
74LS109	156-1059-XX	Flip-Flop, Dual, J-K w/Preset, Clear	16 DIP
74LS112	156-1258-XX	Flip-Flop, Dual, J-K Neg Edge Trigger	16 DIP
74LS113	156-0567-XX	Flip-Flop, Dual, J-K Neg Edge Trigger	14 DIP
74LS123	156-1600-XX	Multivibrator, Dual, Retriggered	16 DIP

LOW POWER SCHOTTKY (CONT)

VENDOR NUMBER	PART NUMBER	DESCRIPTION	CASE STYLE
74LS124	156-0861-XX	Oscillator, Voltage Controller, Dual	16 DIP
74LS126	156-1619-XX	Buffer, Quad Bus w/3-State Output	14 DIP
74LS132	156-0721-XX	Gate, Quad, 2-Input NAND, Schmitt Trig.	14 DIP
74LS133	156-0866-XX	Gate, 13-Input NAND	16 DIP
74LS136	156-0990-XX	Gate, Quad, 2-Input EX OR w/OC Output	14 DIP
74LS138	156-0469-XX	Decoder, 3-Line to 8-Line	16 DIP
74LS139	156-0541-XX	Decoder/Demultiplexer, Dual 2-4 Line	16 DIP
74LS145	156-1235-XX	Transceiver, Dcdr/Drvr BCD-to-7 Segment	16 DIP
74LS147	156-1177-XX	Encoder, 10-to-4 Line Priority	16 DIP
74LS148	156-1252-XX	Encoder 8-to-3 Line	16 DIP
74LS151	156-0994-XX	Selector/Multiplexer, 8-Input w/Enable	16 DIP
74LS153	156-0798-XX	Selector/Multiplexer, Dual 4-to-1 Line	16 DIP
74LS154	156-1026-XX	Demultiplexer/Decoder, 4-to-16 Line	24 DIP
74LS155	156-0390-XX	Decoder, Demultiplexer, Dual 4-to-2 Line	16 DIP
74LS156	156-1432-XX	Decoder, Dual 2-to-4 Line	16 DIP
74LS157	156-0530-XX	Multiplexer, Quad, 2-Input	16 DIP
74LS158	156-1395-XX	Selector/Multiplexer, Quad 2-to-1	16 DIP
74LS161	156-0844-XX	Counter, 4-Bit Binary Sync	16 DIP
74LS162	156-0788-XX	Counter, 4-Bit Sync with Sync Clear	16 DIP
74LS163	156-0784-XX	Counter, 4-Bit Binary Sync	16 DIP
74LS164	156-0651-XX	Register, 8-Bit Par-cut Series Shift	14 DIP
74LS165	156-0789-XX	Register, 8-Bit Parallel Load Shift	16 DIP
74LS166	156-1313-XX	Register, 8-Bit Parallel Input, Ser Outp	16 DIP
74LS169	156-0957-XX	Counter, Sync Up/Down Binary	16 DIP
74LS168	156-1371-XX	Counter, Sync Up/Down Decade	16 DIP
74LS170	156-0732-XX	Register, 4 x 4 File with OC Output	16 DIP
74LS173	156-0951-XX	Register, 4-Bit D-Type 3-State Output	16 DIP
74LS174	156-0391-XX	Latch, Hex with Clear	16 DIP
74LS175	156-0392-XX	Latch, Quad with Clear	16 DIP
74LS181	156-1376-XX	ALU	24 DIP
74LS190	156-0569-XX	Counter, BCD	16 DIP
74LS191	156-0422-XX	Counter, Up/Down Sync Binary	16 DIP
74LS192	156-0526-XX	Counter, 4-Bit Up/Down, Dual Clock	16 DIP
74LS193	156-0412-XX	Counter, 4-Bit Up/Down Sync	16 DIP
74LS194	156-0768-XX	Register, Bidirect Universal Shift	16 DIP
74LS195	156-0376-XX	Register, 4-Bit Parallel I/O Shift	16 DIP
74LS196	156-0727-XX	Cntr/Lch, 30MHz Preset Decade or Binary	14 DIP
74LS197	156-0629-XX	Counter, 30MHz Preset Binary	14 DIP
74LS221	156-0733-XX	Multivibrator, Dual Monostable with Schmitt Triggered Input	16 DIP
74LS240	156-0914-XX	Inverter/Buffer, Octal w/3-State Output	20 DIP
74LS241	156-0955-XX	Buffer, Octal with 3-State Output	20 DIP
74LS242	156-1025-XX	Transceiver, Quad Bus	14 DIP
74LS243	156-0928-XX	Transceiver, Quad Bus	14 DIP
74LS244	156-0956-XX	Buffer, Octal w/3-State Output	20 DIP
74LS245	156-1111-XX	Transceiver, Octal Bus	20 DIP
74LS251	156-0470-XX	Selector, 8-Input Data w/3-State Output	16 DIP
74LS253	156-0471-XX	Selector, Dual 4-to-1 Line Date with 3-State Output	16 DIP
74LS257	156-0529-XX	Multiplexer, Quad 2-Input w/3-State Out	16 DIP
74LS258	156-1229-XX	Multiplexer, Quad, 2-1, w/3-State Output	16 DIP
74LS259	156-0874-XX	Latch, 8-Bit Addressable	16 DIP
74LS260	156-0985-XX	Gate, Dual, 5-Input NOR	14 DIP
74LS266	156-0652-XX	Gate, Quad 2-Input EXCL NOR w/OC Output	14 DIP
74LS273	156-0865-XX	Flip-Flop, Octal D-Type with Clear	20 DIP
74LS279	156-0804-XX	Latch, Quad Shift Register	16 DIP
74LS280	156-0915-XX	Generator/Chckr, 9-Bit Odd/Even Parity	14 DIP
74LS283	156-0679-XX	Adder, 4-Bit Binary	16 DIP
74LS295	156-0734-XX	Register, 4-Bit Right Shift, Left Shift with 3-State Output	14 DIP
74LS298	156-1045-XX	Multiplexer, Quad, 2-Input w/Storage	16 DIP
74LS299	156-0975-XX	Register, 8-Bit Univ. Shift/Storage	20 DIP
74LS322	156-1481-XX	Register, 8-Bit with Sign Extender	20 DIP
74LS348	156-1176-XX	Encoder, 3-to-3 Line Priority with 3-State Output	16 DIP
74LS352	156-1521-XX	Selector/Multiplexer, Dual 4-to-1 Line	16 DIP
74LS362	156-0993-XX	Clock/Generator/Driver, 4-Phase	20 DIP
74LS365	156-1220-XX	Driver, Hex Bus, with 3-State Output	16 DIP
74LS366	156-0702-XX	Inverter, Hex Buffer with 3-State Output	16 DIP
74LS367	156-0852-XX	Driver, Hex with 3-State Input	16 DIP
74LS368	156-0720-XX	Driver, Hex 4-to-2 Line Enable with 3-State Output	16 DIP
74LS373	156-1065-XX	Latch, Octal D-Type	20 DIP
74LS374	156-0982-XX	Flip-Flop, Octal D-Type w/Enable	20 DIP
74LS375	156-1318-XX	Latch, 4-Bit Bistable	16 DIP

 NOTE: FOR COST CODES AND RELIABILITY CODES (††), SEE PAGES 1-14 AND 1-20.

TTL FAMILY NUMBER LISTING (CONT)

LOW POWER SCHOTTKY (CONT)

FOR LISTING BY FUNCTION, SEE PAGES 1-14 THRU 20.

VENDOR NUMBER	PART NUMBER	DESCRIPTION	CASE STYLE
74LS377	156-0913-XX	Flip-Flop, Octal D-Type w/Enable	20 DIP
74LS378	156-1221-XX	Gate, Hex D with Enable	16 DIP
74LS379	156-1326-XX	Quad, D-Type with Enable	16 DIP
74LS390	156-0910-XX	Counter, Dual Decade	16 DIP
74LS393	156-1172-XX	Counter, Dual 4-Bit, Binary	14 DIP
74LS399	156-1388-XX	Multiplexer, Quad 2-Input w/Storage	16 DIP
74LS450	156-1761-XX	Multiplexer, 16:1	24 DIP
74LS461	156-1732-XX	Counter, Octal w/3-State Output	24 DIP
74LS490	156-1448-XX	Counter, Dual, 4-Bit Decade	16 DIP
74LS646	156-1661-XX	Transceiver, Octal Bus	
74LS670	156-0989-XX	Register, 4 x 4 File	20 DIP
25LS2520	156-1729-XX	Flip-Flop, Octal D-Type w/Clear	22 DIP
25LS2521	156-1273-XX	Comparator, 8-Bit to Equal	20 DIP
25LS2538	156-1546-XX	Decoder, 1-of-8 with 3-State Output	20 DIP
25LS2569	156-1375-XX	Counter, 4-Bit Up/Down	20 DIP

ADVANCED SCHOTTKY

54F04	156-1616-XX	Inverter, Hex (Die only)	14 DIP
74F00	156-1707-XX	Gate, Quad, 2-Input NAND	14 DIP
74F02	156-1743-XX	Gate, Quad, 2-Input NOR	14 DIP
74F04	156-1722-XX	Inverter, Hex	
74F08	156-1723-XX	Gate, Quad, 2-Input AND	
74F10	156-1752-XX	Gate, Triple, 3-Input NAND	
74F11	156-1663-XX	Gate, Triple, 3-Input	14 DIP
74F32	156-1724-XX	Gate, Quad, 2-Input OR	
74F64	156-1751-XX	Gate, 4-2-3-2 Input AND/OR Invert	
74F86	156-1800-XX	Gate, Quad, 2-Input EX/OR	14 DIP
74F138	156-1727-XX	Decoder/Demultiplexer	
74F139	156-1726-XX	Decoder, Dual 1 of 4	
74F151	156-1746-XX	Multiplexer, 8-Input	16 DIP
74F153	156-1662-XX	Multiplexer, Dual, 4-Input	16 DIP
74F191	156-1714-XX	Counter, Sync Up/Down Binary	16 DIP
74F240	156-1744-XX	Buffer/Line Driver, Octal	20 DIP
74F241	156-1745-XX	Buffer/Line Driver, Octal	20 DIP
74F245	156-1725-XX	Transceiver, Octal Bidirect	20 DIP
74F283	156-1705-XX	Adder, 4-Bit Binary	16 DIP
74F373	156-1721-XX	Latch, D Transparent	
74F374	156-1704-XX	Flip-Flop, Octal, D-Type	20 DIP
74AS804	156-1617-XX	Driver, Hex, 2-Input NOR	20 DIP
74AS881	156-1703-XX	Generator, 4-Bit ALU/Function	24 DIP

ADVANCED LOW POWER SCHOTTKY

74ALS74	156-1756-XX	Flip-Flop, Dual D-Type Pos Edge Trig	
74ALS109	156-1755-XX	Flip-Flop, Dual J-K Pos Edge Triggered	
74ALS133	156-1759-XX	Gate, 13-Input NAND	
74ALS240-1	156-1753-XX	Buffer/Line Driver, Octal	
74ALS564	156-1691-XX	Flip-Flop, Octal D-Type	20 DIP
74ALS569	156-1757-XX	Counter, Sync, 4-Bit Up/Down	
74ALS574	156-1664-XX	Flip-Flop, Octal D-Type	
74ALS1244	156-1754-XX	Buffer/Line Driver, Octal	
74ALS1245	156-1748-XX	Transceiver, Octal Bus w/3-State Output	

†† CATALOG RELIABILITY CODES

USAGE/YR	CODE
≥10	1
≥100	2
≥1 000	3
≥10 000	4
≥100 000	5
≥1 000 000	6
≥10 000 000	7

FAILURE FREQ	CODE		%/YR (median)
1/100 000	A	=	.001
1/50 000	B	=	.002
1/20 000	C	=	.005
1/10 000	D	=	.01
1/5 000	E	=	.02
1/2 000	F	=	.05
1/1 000	G	=	.1
1/500	H	=	.2
1/200	I	=	.5
1/100	J	=	1.0+

For further explanation of this code, see page 4-72.

COST CODE

(CC COLUMN)

CODE	≈ VALUE with -	≈ VALUE no suffix	≈ VALUE with +
A	.2¢	.5¢	.75¢
B	1.25¢	1.5¢	2¢
C	2.5¢	3¢	3.75¢
D	4.25¢	5¢	6¢
E	7¢	8¢	10¢
F	13¢	15¢	18¢
G	22¢	25¢	35¢
H	40¢	50¢	60¢
I	65¢	75¢	$1
J	$1.25	$1.50	$2
K	$2.50	$3	$3.75
L	$4.25	$5	$6
M	$7	$8	$10
N	$13	$15	$18
O	$22	$25	$35+

NOTE: Costs may vary from order to order due to order quantities, vendor, etc.

1

NOTES

2

COST CODE

(CC COLUMN)

CODE	A	B	C	D	E	F	G	H	I	J	K	L	M	N	O
≈ VALUE with +	.75¢	2¢	3.75¢	6¢	10¢	18¢	35¢	60¢	$1	$2	$3.75	$6	$10	$18	$35+
≈ $\overline{\text{VALUE}}$ no suffix	.5¢	1.5¢	3¢	5¢	8¢	15¢	25¢	50¢	75¢	$1.50	$3	$5	$8	$15	$25
≈ VALUE with -	.2¢	1.25¢	2.5¢	4.25¢	7¢	13¢	22¢	40¢	65¢	$1.25	$2.50	$4.25	$7	$13	$22

NOTE: Costs may vary from order to order due to order quantities, vendor, etc.

STATIC SENSITIVE INTEGRATED CIRCUITS, SPECIAL FUNCTION

THIS APPLIES TO ALL DEVICES ON THIS PAGE.

2

A/D CONVERTERS

VENDOR NUMBER	PART NUMBER	** ND	CC	DESCRIPTION	OTHER	†† RC	CASE STYLE
8-Bit							
ADC0801	156-1533-00	A	N-	100µS, µp compatible, CMOS, SAR			20 DIP
TDC1001	156-1590-00	A	O-	400µS, short cycle, SAR			18 DIP
TDC1007	156-1345-00	A	O+	40µS, ECL outputs, Parallel flash converter		4H	64 DIP
10-Bit							
8701	156-1595-00	A	N	6ms, Latches, CMOS, Monolithic, µp compatible			24 DIP
12-Bit							
ADC80-12	156-1307-00	A	O+	25µS, short cycle, Discrete Modual, internal ref			32 DIP
ADC1211	156-1571-00	A	O	100µS, 10-bit linear			24 DIP
One-chip DVM Systems							
ICL7106	156-1483-00	A	M	3-1/2 digit, LCD display drivers, CMOS Auto zero, 1pA input current			40 DIP
ICL7107	156-1435-00	A	M-	3-1/2 digit, LED display drivers, CMOS Auto zero, 1pA input current		4H	40 DIP
MC14433	156-1118-00	A		3-1/2 digit, BCD outputs, CMOS, No display drivers		3E	24 DIP
Two-chip DVM Systems							
LD110	156-0476-00	A	L	3-1/2 digit, Digital section, 2KHz to 250KHz clock, use with LD111A or LD120		4H	16 DIP
LD111A	156-1268-00	A	L+	3-1/2 digit, Analog section, use with LD110		4G	16 DIP
LD111A	156-1268-01	N		3-1/2 digit, Analog section, special noise selection, use with LD110			16 DIP
LD120	156-1306-00	A	L	4-1/2 digit, Analog section, use with LD121 or LD110		4I	16 DIP
LD121	156-1305-00	A	L+	4-1/2 digit, Digital section, 50KHz to 250KHz, use with LD120 or LD111A		3J	18 DIP
ICL8052	156-0909-00	A	M	3-1/2 digit, Analog signal conditioner, use with ICL8053 or 71C03			14 DIP
ICL8053	156-0908-00	A	M-	3-1/2 digit, Auto zero switch network, use with ICL8052		3F	14 DIP

D/A CONVERTERS

VENDOR NUMBER	PART NUMBER	** ND	CC	DESCRIPTION	OTHER	†† RC	CASE STYLE
8-Bit							
DAC-08	156-1255-00	A	K-	Complimentary current output, 135nS max, Multiplying, 9-bit accurate, Monolithic Bipolar, No-ref			16 DIP
DAC-08	156-1255-01	N	K-	Complimentary current output, 135nS max, Multiplying, 9-bit accurate, Monolithic Bipolar, No-ref	Scrnd	4E	16 DIP
AD558	156-1623-00	A	M-	Voltage output, 1.5µS max, µp compatible band gap ref, Latches			16 DIP
MC1408	156-0509-00	N	I+	Current output, 300nS max, Multiplying, .19% accurate, No-ref		3G	16 DIP
NE5018	156-1311-00	A	K+	Voltage output, 2µS, Latches, Ref, burn-in per MIL-STD-883			22 DIP
AM6080	156-1555-00	A	K	Complimentary current output, 160nS, Latches, Multiplying, µp compatible, No-ref			20 DIP
AD7523	156-1366-00	A	J+	Current output, 150µS, CMOS, Multiplying, No-ref			16 DIP
AD7524	156-1367-00	A	K	Current output, 150µS, CMOS, Multiplying, Latches, µp compatible, No-ref		4C	16 DIP

D/A CONVERTERS (CONT)

VENDOR NUMBER	PART NUMBER	** ND	CC	DESCRIPTION	OTHER	†† RC	CASE STYLE
10-Bit							
DAC10	156-1638-00	A	L-	Complimentary current output, 150nS max, No-ref, Multiplying			18 DIP
DAC100	156-0137-00	A	O+	Current output, 375nS, 2-chip Hybrid, Ref			16 DIP
DAC331C	156-1321-00	A	O	Current output, 1.5µS, CMOS, Multiplying, No-ref		2I	16 DIP 16 DIP
AD561	156-0967-00	A	M+	Current output, 250µS, Ref		3I	
TD1016	156-1441-00	A	O+	Current output, 25nS, ECL, TTL/ECL input Buffers, No-ref			40 DIP
TD1016	156-1441-01	N	O+	Current output, 25nS, ECL, TTL/ECL input Buffers, No-ref	Scrnd		40 DIP
MC3410	156-0927-00	A	L-	Current output, 250nS, No-ref			16 DIP
MC3410	156-0927-01	N		Current output, 250nS, No-ref	Scrnd		16 DIP
AD7533	156-0719-00	A	L+	Current output, 500nS, CMOS, Multiplying, No-ref		3F	16 DIP
AD7533	156-0719-01	N	M-	Current output, 500nS CMOS, Multiplying, No-ref	Scrnd		16 DIP
12-Bit							
DAC60-12	156-1024-00	N	O+	Current output, 150nS, Discrete Modual construction		3I	28 DIP
DAC80I	156-0958-00	A	N+	Current output, 300nS, 1/4 LSD Diff Linearity Ref, Hybrid		4I	24 DIP
DAC80ZI	156-1443-00	A	O-	Current output, 300nS, 1/4 LSD Diff Linearity Ref, Will work w/12v. supplies			24 DIP
DAC80V	156-0959-00	A	O-	Voltage output, 5µS, Hybrid, Ref			24 DIP
DAC80V	156-0959-01	N	O-	Voltage output, 5µS, Hybrid, Ref	Scrnd		24 DIP
DAC80-CCD-I	156-1409-00	A	O	Current output, 300nS, Coded decimal input, Hybrid, Ref			24 DIP
DAC80-CCD-I	156-1409-01	N	O	Current output, 300uS, Coded decimal input, Hybrid, Ref	Scrnd		24 DIP
AD565A	156-1329-00	A	N	Current output, 200nS, Monolithic, Ref		3I	24 DIP
DAC1200	156-1184-00	N	O	Current output, 1.5µS, Voltage output, 2.5µS, Ref 3-chip Hybrid		3H	24 DIP
HS3120	156-1811-00	A		Current output, 500nS, Buffers, Multiplying, µp compatible, No-ref			28 DIP
AM6012	156-1589-00	A	L+	Current output, 250nS, Multiplying, Segmented, No-ref			20 DIP
MP7612	156-1548-00	A	N-	Current output, 1µS, CMOS, No-ref			18 DIP
16-Bit							
DAC71-I	156-1534-00	A	O+	Current output, 1µS, 4-digit BCD input, Ref			24 DIP
DAC71-I	156-1534-01	N	O+	Current output, 1uS, 4-digit BCD input, Ref			24 DIP

RMS TO DC CONVERTER

VENDOR NUMBER	PART NUMBER	** ND	CC	DESCRIPTION	OTHER	†† RC	CASE STYLE
536A	156-1259-00	A	M+	Monolithic true RMS to DC converter, 0.5% max error approx 200KHz Band Width		4H	14 DIP
536A	156-1457-00	A	L+	Monolithic true RMS to DC converter, 0.5% max error approx. 200KHz Band Width		3I	TO-100
536A	156-1457-02	N		Monolithic true RMS to DC converter, 0.5% max error approx. 200KHz Band Width	Scrnd		TO-100

** NEW DESIGN RECOMMENDATION FROM COMPONENT ENGINEERING:

A = Acceptable
N = Not Recommended

STATIC SENSITIVE

INTEGRATED CIRCUITS, SPECIAL FUNCTION

THIS APPLIES TO ALL DEVICES ON THIS PAGE

VENDOR NUMBER	PART NUMBER	** ND	CC	DESCRIPTION	OTHER	†† RC	CASE STYLE
VOLTAGE TO FREQUENCY CONVERTERS							
LM331N	156-1362-00	A	H+	Voltage to Freq. Converter		4F	8 DIP
ANALOG SWITCHES							
DG181	156-1236-00	A	L+	2-Channel, JFET		4F	TO-100
DG201	156-0858-00	A	K	4-Channel, CMOS			16 DIP
4016	156-0289-00	A	G+	4-Channel, CMOS		3E	14 DIP
4016	156-0289-01	A	H-	4-Channel, CMOS	Chkd		14 DIP
4016	156-0289-02	A	H-	4-Channel, CMOS	Scrnd		14 DIP
4051	156-0513-00	A	H	8-Channel, CMOS		3F	16 DIP
4051	156-0513-02	A	H+	8-Channel, CMOS	Scrnd	4F	16 DIP
4052	156-0514-00	A	H	Dual 4-Channel, CMOS			16 DIP
4052	156-0514-01	A	I-	Dual 4-Channel, CMOS	Scrnd		16 DIP
4053	156-0515-00	A	H+	Triple 2-Channel, CMOS		5E	16 DIP
4053	156-0515-02	A	I-	Triple 2-Channel, CMOS	Scrnd	4H	16 DIP
4053	156-0515-03	A	I-	Triple 2-Channel, CMOS	Scrnd		16 DIP
4066	156-0644-00	A	G+	4-Channel, CMOS		4F	14 DIP
4066	156-0644-01	A	G+	4-Channel, CMOS	Chkd		14 DIP
4066	156-0644-03	A	H	4-Channel, CMOS	Scrnd	4C	14 DIP
SD5000	156-1303-00	A	K	4-Channel (4-DMOS array)			16 DIP
IH5010	156-1256-00	A	L	4-Channel (4-JFET array)			14 DIP
AD7511	156-0723-00	A	L+	4-Channel, CMOS			16 DIP
AD7511	156-0723-01	A	L+	4-Channel, CMOS	Scrnd		16 DIP
11508	156-1270-00	A	M-	8-Channel, Bi FET		3F	16 DIP
13333	156-1211-00	A	J+	4-Channel, Bi FET		4F	16 DIP
MUX24	156-1788-00	A	L	Dual 4-Channel, Bi FET			16 DIP
COMPARATORS							
LM211H	156-1790-00	A		High Speed			TO-99
311	156-1126-00	A	G	Single, with strobe			8 DIP
311	156-1126-01	A	H	Single, with strobe	Chkd	4E	8 DIP
311	156-0096-00	A	I-	Single, with strobe		4G	TO-99
311	156-0096-01	A	I	Single, with strobe	Chkd		TO-99
311	156-0096-02	A	I	Single, with strobe	Scrnd		TO-99
319D	156-1226-00	A	I+	Dual, 80nS typ., Delay		4F	14 DIP
319D	156-1226-01	A	J+	Dual, 80nS typ., Delay	Scrnd		14 DIP
319H	156-0570-00	A	J-	Dual, 80nS typ., Delay		3E	TO-100
319H	156-0570-01	N		Dual, 80nS typ., Delay	Chkd		TO-100
339N	156-0411-00	A	G+	Sgl Sply, Slow Spd Quad		5F	14 DIP
339N	156-0411-01	A	H-	Sgl Sply, Slow Spd Quad	Chkd	4D	14 DIP
339N	156-0411-02	A	H	Sgl Sply, Slow Spd Quad	Scrnd	4D	14 DIP
LM361	156-1324-00	N	J-	20nS Max. Delay	Scrnd		14 DIP
393N	156-1225-00	A	G+	Dual		4E	8 DIP
393N	156-1225-01	A	H-	Dual	Scrnd	4E	8 DIP
NE521	156-1339-00	A	I+	Dual Diff Comp. Hi Spd	Scrnd	3G	14 DIP
685	156-0362-00	A	M-	ECL, 6.5nS Delay		3G	TO-100
685	156-0362-01	A	M-	ECL, 6.5nS Delay	Scrnd		TO-100
710CH	156-0013-00	A	H-	40nS typ. Delay		4E	TO-99
711C	156-0116-00	A	H-	Dual, with strobe		3H	14 DIP
1514L	156-1056-00	A	I+	Dual Diff. Comparator		3H	14 DIP
MC3405	156-1284-00	A	I-	Dual			14 DIP
3431	156-1647-00	A		Quad, High Speed			
9685	156-1344-00	A	L+	ECL, 3nS Delay			TO-100
PHASE LOCK LOOPS & RELATED COMPONENTS							
VOLTAGE CONTROLLED OSCILLATORS							
LM331N	156-1362-00	A	H+	Voltage to Freq. Convrtr		4F	8 DIP
1648P	156-0266-00	A	J	ECL		3H	14 DIP
1648P	156-0266-01	A	J	ECL	Scrnd		14 DIP
1658	156-0224-00	A	K-	ECL			16 DIP
1658	156-0224-01	A		ECL	Scrnd		16 DIP
74LS124	156-0861-00	A	I-	TTL Dual			16 DIP
74LS124	156-0861-01	A		TTL Dual	Scrnd		16 DIP
LOOPS							
IC14046CP	156-0704-00	A	H	CMOS, Linear		4F	16 DIP
IC145146	156-1742-00	A	L-	4-Bit Bus, Compatible, Digital			20 DIP
IC145155	156-1718-00	A		CMOS, Serial input, Digital			18 DIP
MULTIVIBRATORS							
IC4024P	156-0121-00	A	J+	TTL, Dual Volt Controlled			14 DIP

VENDOR NUMBER	PART NUMBER	** ND	CC	DESCRIPTION	OTHER	†† RC	CASE STYLE
PHASE DETECTORS							
MC4044	156-0124-00	A	J+	TTL Dual Phase-Frequency Detector		3E	14 DIP
MC4044	156-0124-02	N	J+	TTL Dual Phase-Frequency Detector	Scrnd		14 DIP
12040L	156-0518-00	A	L	ECL Phase-Frequency Detector			14 DIP
SAMPLE AND HOLD							
SMP-11-FY	156-1312-00	A	K-	Monolithic Sample & Hold 3.5µS acquisition time		3E	14 DIP
LF198	156-1789-00	A	N	Bi FET Monolithic Sample & Hold			TO-5
LF298H	156-1791-00	A		High Perf. Amplifier			TO-99
LF398	156-1370-00	A	J+	Monolithic Sample & Hold 6µS acquisition time			8 Lead
TIMERS							
555	156-0402-00	A	H-	Functional Timer Block		4E	8 DIP
555	156-0402-01	A	H-	Functional Timer Block	Chkd		8 DIP
555	156-0402-02	A	H-	Functional Timer Block	Scrnd		8 DIP
555	156-0402-03	A	H-	Functional Timer Block	Scrnd		8 DIP
7555	156-1408-00	A	H+	General Purpose Timer		4F	8 DIP
7555	156-1408-01	A	L-	General Purpose Timer	Scrnd		8 DIP
MISCELLANEOUS							
CCD321A	156-1593-00	A	O+	Analog Shift Register 455/910-Bit			16 DIP
CCS321A	156-1593-01	A	O+	Analog Shift Register 455/910-Bit	Chkd		16 DIP
µPC616A	156-1396-00	A		Temperature Sensor Controller			4 Lead 16 DIP

COST CODE

(CC COLUMN)

CODE	≈ VALUE with -	≈ VALUE no suffix	≈ VALUE with +
A	.2¢	.5¢	.75¢
B	1.25¢	1.5¢	2¢
C	2.5¢	3¢	3.75¢
D	4.25¢	5¢	6¢
E	7¢	8¢	10¢
F	13¢	15¢	18¢
G	22¢	25¢	35¢
H	40¢	50¢	60¢
I	65¢	75¢	$1
J	$1.25	$1.50	$2
K	$2.50	$3	$3.75
L	$4.25	$5	$6
M	$7	$8	$10
N	$13	$15	$18
O	$22	$25	$35+

NOTE: Costs may vary from order to order due to order quantities, vendor, etc.

†† CATALOG RELIABILITY CODES

USAGE/YR	CODE
≥ 10	1
≥ 100	2
≥ 1 000	3
≥ 10 000	4
≥ 100 000	5
≥ 1 000 000	6
≥ 10 000 000	7

FAILURE FREQ	CODE	%/YR (median)
1/100 000	A	= .001
1/50 000	B	= .002
1/20 000	C	= .005
1/10 000	D	= .01
1/5 000	E	= .02
1/2 000	F	= .05
1/1 000	G	= .1
1/500	H	= .2
1/200	I	= .5
1/100	J	= 1.0+

For further explanation of this code, see page 4-72.

2

VOLTAGE REGULATOR SELECTION GUIDE

	TO-92	TO-39	TO-202	TO-220	TO-3
	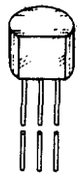	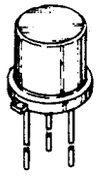	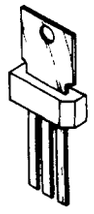	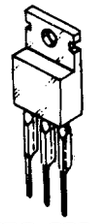	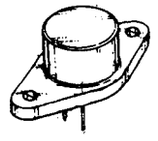
Max Current	100 mA	100 mA	500 mA	1.5 A	3.0 A
Max Power on a Heatsink	--	--	7.5 W	15 W	30 W
Max Power in Air T_A = 70°C	150 mW for T_J = 100°C	370 mW for T_J = 125°C	380 mW for T_J = 100°C	460 W for T_J = 100°C	--
$R_{\theta JA}$	200°C/W	150°C/W	79°C/W	65°C/W	--
$R_{\theta JC}$	--	38°C/W	10°C/W	5°C/W	3°C/W

POLARITY / * VOLTAGE	+	-	+	-	+	-	+	-	+	-
5V	156-0991-00 156-0991-01	156-1150-00 156-1150-01			156-1263-00		156-0277-00 156-0277-01	156-0846-00	156-0684-00	
5.2V								156-0655-00 156-0655-01		156-1348-00
8V			156-1244-00							
12V			156-1160-00	156-1207-00		156-1264-00	156-0285-00 156-0285-01 156-0285-02	156-0872-00 156-0872-01		
15V	156-1261-00	156-1260-00			156-1262-00		156-0988-00 156-0312-00	156-0527-00 156-0930-00		
18V							156-0264-00			
20V										
24V							156-0926-00			

* TOLERANCE SPECIFICATIONS ARE ±5%, EXCEPT WHEN OTHERWISE NOTED ON THE SPEC.

ATTENTION
OBSERVE PRECAUTIONS FOR HANDLING
ELECTROSTATIC SENSITIVE DEVICES

THIS APPLIES TO ALL DEVICES ON THIS PAGE

INTEGRATED CIRCUITS, LINEAR

ANALOG VIDEO CIRCUITS

VENDOR NUMBER	PART NUMBER	** ND	CC	DESCRIPTION	OTHER	†† RC	CASE STYLE
733C	156-0162-00	A	G	Video Amplifier		4G	14 DIP
733C	156-0162-02	N	J+	Video Amplifier	Scrnd		14 DIP
TDA1170	156-1693-00	A	K-	T.V. Vert. Defl. System			12 DIP
TDA1170	156-1693-01	A		T.V. Vert. Defl. System			12 DIP
MC1350P	156-1709-00	A	I-	IF Amplifier			8 DIP
MC1355P	156-0902-00	A	I	FM-IF Amplifier			14 DIP
1357	156-0906-00	A	I	IF Ampl & Quadrature Detct			14 DIP
MC1391P	156-1147-00	A	H	T.V. Horizontal Processor		4G	8 DIP
MC1550G	156-0069-00	A	I-	RF-IF Amplifier			TO-100
LM1848	156-1401-00	A	J-	T.V. Croma Demodulator			14 DIP
3028A	156-0033-00	A	I-	RF-IF Amplifier			TO-99

MULTIPLIERS-MODULATORS/DEMODULATORS

VENDOR NUMBER	PART NUMBER	** ND	CC	DESCRIPTION	OTHER	†† RC	CASE STYLE
MC1495L	156-0407-00	A	J-	4-Quadrant Multiplier, 4% error		4F	14 DIP
MC1495L	156-0407-01	N	J-	4-Quadrant Multiplier, 4% error	Chkd		14 DIP
MC1495L	156-0407-02	N	J-	4-Quadrant Multiplier, 4% error	Scrnd	4C	14 DIP
MC1496	156-0130-00	A	H-	Balanced Modulator/Demodulr		4E	TO-100
MC1496	156-0130-02	N	I-	Balanced Modulator/Demodulr	Scrnd		TO-100
TL442CN	156-0517-00	A	H+	Mixer Doubly Balanced			14 DIP
TL442CN	156-0517-01	N	I	Mixer Doubly Balanced	Scrnd		14 DIP

VOLTAGE REGULATORS

POSITIVE

VENDOR NUMBER	PART NUMBER	** ND	CC	DESCRIPTION	OTHER	†† RC	CASE STYLE
309	156-0176-00	N	I	5V ± 5%, 1 A		4F	TO-3
323	156-0684-00	A	K+	5V ± 5%, 3 A, 15 W		3H	TO-3
7805	156-0277-00	A	H	5V ± 5%, 1 A, 15 W		4G	TO-220
7805	156-0277-01	A	H+	5V ± 5%, 1 A, 15 W	Scrnd		TO-220
78L05	156-0991-00	A	G-	5V ± 5%, 140 mA, 625 mW		4C	TO-92
78L05	156-0991-01	N	H	5V ± 5%, 140 mA, 625 mW		4C	TO-92
78M05	156-1263-00	N	H-	5V ± 5%, 500 mA, 1.5 W		4C	TO-202
78L08	156-1244-00	A	H-	8V ± 5%, 100 mA, 850 mW			TO-39
7812	156-0285-00	A	H	12 V ± 5%, 1 A, 15 W		4F	TO-220
7812	156-0285-01	A	I-	12 V ± 5%, 1 A, 15 W	Scrnd	4F	TO-220
7812	156-0285-02	A	H	12 V ± 5%, 1 A, 15 W	Chkd		TO 220
78L12	156-1160-00	A	H-	12 V ± 5%, 100 mA, 850 mW		4E	TO-39
78L12	156-1160-01	N	I+	12 V ± 5%, 100 mA, 850 mW	Scrnd		TO-39
7815	156-0312-00	A	H	15 V ± 5%, 1 A, 15 W		4H	TO-220
78L15	156-1261-00	A	G	15 V ± 5%, 100 mA, 625 mW		3F	TO-92
78L15	156-1261-02	N		15 V ± 5%, 100 mA, 625 mW	Scrnd		TO-92
78M15	156-1262-00	N	H-	15 V ± 5%, 500 mA, 1.5 W		3G	TO-202
7818	156-0264-00	A	H	18 V ± 5%, 1 A, 15 W			TO-220
7824	156-0926-00	A	H	24 V ± 5%, 2.1 A, 15 W			TO-220

NEGATIVE

VENDOR NUMBER	PART NUMBER	** ND	CC	DESCRIPTION	OTHER	†† RC	CASE STYLE
7905	156-0846-00	A	H+	-5V ± 5%, .5 A, 15 W		3E	TO-220
79L05	156-1150-00	A	G+	-5V ± 5%, 100 mA, 625 mW		4E	TO 92
79L05	156-1150-01	A	H-	-5V ± 5%, 100 mA, 625 mW	Scrnd		TO-92
7905.2	156-0655-00	A	H-	-5.2V ± 5%, .5 A, 15 W			TO-220
7905.2	156-0655-01	A	H	-5.2V ± 5%, .5 A, 15 W	Scrnd		TO-220
LM345	156-1348-00	A	L	-5.2V ± 5%, 3 A, 15 W			TO-3
7912	156-0872-00	A	H	-12V ± 5%, .5 A, 15 W		4E	TO-220
7912	156-0872-01	A	I	-12V ± 5%, .5 A, 15 W	Scrnd	4C	TO-220
7912	156-0872-02	A	H+	-12V ± 5%, .5A, 15 W	Scrnd		TO-220
79M12	156-1604-00	N	J	-12V ± 5%, 350 mA			TO-5
79L12	156-1207-00	A	H	-12V ± 5%, 100 mA, 850 mW			TO-39
79L12	156-1207-01	N	H+	-12V ± 5%, 100 mA, 850 mW	Scrnd		TO-39
79M12	156-1264-00	N	H	-12V ± 5%, 500 mA, 1.5 W		3G	TO-202
7915	156-0527-00	A	H	-15V ± 5%, 1.5 A, 15 W		4I	TO-220
7915	156-0527-01	N	H	-15V ± 5%, 1.5 A, 15 W	Scrnd		TO-220
7915	156-0930-00	N	J+	Selected -15.3 to -14.8V			TO-220
79L15	156-1260-00	A	H-	-15V ± 5%, 100 mA, 625 mW		4H	TO-92

ADJUSTABLE

VENDOR NUMBER	PART NUMBER	** ND	CC	DESCRIPTION	OTHER	†† RC	CASE STYLE
723C	156-0053-00	A	H	2 to 40V, 800 mW		4D	TO-100
723C	156-0053-01	A	I	2 to 40V, 800 mW	Scrnd		TO-100
723C	156-0071-00	A	H-	2 to 37V, 600 mW		4G	14 DIP
723C	156-0071-01	A	H-	2 to 37V, 600 mW	Chkd		14 DIP
723C	156-0071-02	A	H	2 to 37V, 600 mW	Scrnd	4E	14 DIP
723HM	156-0699-00	N	I-	2 to 37V, 412 mW			TO-100
723HM	156-0699-01	N	J-	2 to 37V, 412 mW	Scrnd	4E	TO-100
LM317	156-1161-00	A	I	1.2 to 37V, 1.5 A, 15 W		4E	TO-220
LM317LZ	156-1529-00	A	G+	3 to 40V, 100 mA, 625 mW			TO-99
LM337T	156-1451-00	A	I+	-1.2 to -37V, 1.5 A, 15 W		4E	TO-220
1469R	156-0052-00	N	J+	2.5 to 37V, .5 A, 10.8 W		2J	TO-66
SG3501	156-0208-00	N	L+	±15V or ±8 to 23V, 100 mA		3G	14 DIP
SG3501	156-0208-01	N	L+	±15V or ±8 to 23V, 100 mA	Scrnd	3E	14 DIP
4194DC	156-0496-00	A	K-	0 to ±32V, 150 mA, 900 mW		3F	14 DIP
4194DC	156-0496-01	A	K-	0 to ±32V, 150 mA, 900 mW	Scrnd		14 DIP
TL431C	156-1631-00	A	H-	Shunt Regulator, 2.5 - 36V			TO 92

SWITCHING REGULATOR CONTROL

VENDOR NUMBER	PART NUMBER	** ND	CC	DESCRIPTION	OTHER	†† RC	CASE STYLE
TL594CN	156-1627-00	A	J+	Pulse width Mod Contr Ckt		4C	16 DIP
SG3524	156-0933-00	A	K+	Pulse width Modulation w/ Push-Pull Outputs		3G	16 DIP
SG3524	156-0933-01	A	L-	Pulse width Modulation w/ Push-Pull Outputs, Burn-in	Scrnd		16 DIP
SG3526	156-1585-00	A	N-	Pulse width Mod Contr Ckt w/Push-Pull totem-pole Outputs; Screened, Selected & Burned-in	Scrnd		18 DIP
SG3526	156-1585-01	A	N-	Pulse width Mod Contr Ckt w/Push-Pull totem-pole Outputs; Screened, Selected & Burned-in w/Heat Sink	Scrnd		18 DIP
78S40	156-1283-00	A	J	Gated Oscillator w/Single-ended Output and Uncommitted High-Current Op Amp		3E	16 DIP
NE5561N	156-1799-00	A		SW Mode Pwr Supp Contr Ckt			

OVERVOLTAGE PROTECTOR CIRCUITS

VENDOR NUMBER	PART NUMBER	** ND	CC	DESCRIPTION	OTHER	†† RC	CASE STYLE
MC3423U	156-1266-00	A	I+	Adjustable Trip Point; SCR Crowbar Drive; 2.5V Band-gap Ref; Burned-in	Scrnd	4D	8 DIP

VOLTAGE REFERENCE

REF V	TOL ± %	TC PPM /°C	TEMP RANGE °C	VENDOR NUMBER	PART NUMBER	** ND	CC	†† RC	CASE STYLE	NOTES
1.225	2.	50	0-70	CL8069CCQ	156-1490-00	A	J-		TO-52	Two-Terminal
1.225	2.	100	0-70	CL8069DC	156-1586-00	A	I			
2.5	1.	25	0-70	MC1403AU	156-1439-00	A		3H	8 DIP	Purchased Pre-Conditioned
2.5	1.	40	0-70	MC1403UDS	156-1173-00	A	I+	4D	8 DIP	Purchased Pre-Conditioned
2.5	2.	25	0-70	AD580LH	156-0937-00	A	L+	3I	TO-52	
5.0	1.	25	0-70	MC1404AU5DS	156-1437-00	A	J+		8 DIP	Purchased Pre-Conditioned
5.0	2.7	65	0-70	REF-02CJ	156-1543-00	A	L		TO-99	Metal Pkg
6.25	1.	25	0-70	MC1404AU6	156-1436-00	A			8 DIP	Purchased Pre-Conditioned
6.25	.2	25	0-70	MC1400UG	156-1812-00	A	K+		8 DIP	
6.95	5.	2	0-70	LM399	156-0783-00	A	K-	3F	TO-52	Internal Heater
6.95	5.	2	0-70	LM399	156-0783-01	A	L		TO-52	Internal Heater, Screened
10.	.3	8.5	0-70	REF-01	156-1503-00	A	M+		TO-99	
10.	.3	30	0-70	AD40227	156-1249-00	A	K+	3F	TO-5	Purchased Pre-Conditioned
10.	.05	5	0-70	AD581LH	156-1322-00	A	M+	2H	TO-5	Purchased Pre-Conditioned

** NEW DESIGN RECOMMENDATION FROM COMPONENT ENGINEERING

A = Acceptable
N = Note Recommended

†† FOR RELIABILITY CODES, SEE PAGE 3-5.

STATIC SENSITIVE

INTEGRATED CIRCUITS, LINEAR (CONT)

ARRAYS (DIODE & TRANSISTOR)

THIS APPLIES TO ALL DEVICES ON THIS PAGE.

VENDOR NUMBER	PART NUMBER	** ND	CC	†† RC	DESCRIPTION	CASE STYLE
MC1413PDS	156-1245-00	A	I-	4F	H/V. high current driver array, 7-darlington, Scrnd	16 DIP
MC1416P	156-1810-00	A			Peripheral Driver Array	16 DIP
FSA2619P	156-1540-00	A	J+		8-diode array	16 DIP
FSA2720M	156-1545-00	A	K-		7-diode array	14 DIP
MPQ2907	156-1163-00	A	J-	3H	4-transistor, high current, PNP	14 DIP
CA3039	156-0106-00	N	I-	4F	6-diode array	MOD TO-101
CA3039	156-0106-01	N	I		100% tested	
CA3045	156-0065-00	N	I-	4F	5-transistor array, selected for V_{ce} (sat) ≤0.4V, NPD	14 DIP
CA3045	156-0065-01	N	I	4E	Screened	16 DIP
CA3046	156-0068-00	N	H-		5-transistor array, NPN	14 DIP
CA3046	156-0048-00	A	H-	5D	5-transistor array, NPN	14 DIP
CA3046	156-0048-01	A	H-		Inspected	14 DIP
CA3046	156-0048-02	N	H		Checked	14 DIP
CA3046	156-0048-03	N	H+	4F	Selected	14 DIP
CA3054	156-1349-00	A	H	4D	Dual Differential Amp, NPN	14 DIP
CA3060E	156-0901-00	A	J		Operational transconductance amplifier array	16 DIP
CA3081	156-0355-00	A	H+		7-transistor, common emitter, NPN	16 DIP
CA3082	156-1190-00	A	H-		7-transistor, common collector, NPN	16 DIP
CA3083	156-0259-00	A	H		5-transistor, all independent, NPN	16 DIP
CA3083	156-0259-01	N	I-		Selected, NPN	16 DIP
CA3083	156-0259-02	N	H+	3F	Selected, NPN	16 DIP
CA3086 (similar)	156-0197-00	A	I	4E	5-transistor array, NPN	14 DIP
CA3086	156-0197-01	N	I		Checked	14 DIP
CA3086	156-0197-03	N	I+	4H	Checked	
CA3096AE	156-1381-00	A	H		5-transistor array (3 NPN, 2 PNP)	16 DIP
CA3102	156-0534-00	A	J-	5D	Dual differential amplifier, NPN (6)	14 DIP
CA3102	156-0534-01	N	J-		Screened	14 DIP
CA3127E	156-1294-00	A	I+	5B	High frequency, 5-transistor array, NPN	16 DIP
CA3141E	156-1450-00	N	G+	3F	10-diode array	16 DIP
CA3183 (similar)	156-1527-00	A	I-		5-transistor array, NPN	16 DIP
MHQ3467	156-1569-00	A	I		4-transistor, PNP	14 DIP
CA3725G	156-0281-00	A	I	4E	4-transistor, high current NPN	14 DIP
SD5000B	Δ156-1303-00	A	K		DMOS FET Quad Analog Switch, N-Channel	16 DIP
SD5002CM	156-1553-00	A	K		DMOS FET Quad Analog Switch, N-Channel	Die Form

OPERATIONAL AMPLIFIER DEFINITIONS

V_{OS} — INPUT OFFSET VOLTAGE - That voltage which must be applied between the input terminals through two equal resistances to force the output voltage to zero.

V_{OS} drift — OFFSET VOLTAGE TEMPERATURE DRIFT - The average drift rate of offset voltage for a thermal variation from room temperature to the indicated temperature extreme.

I_B — INPUT BIAS CURRENT - The average of the currents flowing into the input terminals when the output is at zero voltage.

I_{OS} — INPUT OFFSET CURRENT - The difference in the currents into the two input terminals when the output is at zero voltage.

$$I_{OS} = I_1 - I_2 \ , \ V_o = 0$$

I_S — SUPPLY CURRENT - The current required from the power supply to operate the amplifier with no load and the output at zero.

V_o — OUTPUT VOLTAGE SWING - The peak output voltage swing, referred to zero, that can be obtained with the amplifier operating within its gain specification.

R_{in} — INPUT RESISTANCE - The ratio of the change in input voltage to the change in input current on either input with the other grounded.

V_{CM} — INPUT COMMON MODE VOLTAGE RANGE - The range of common mode voltages on the input terminals for which the amplifier operates within its input offset and bias specifications.

CMRR — COMMON MODE REJECTION RATE - The ratio of a specified range of input common mode voltage to the peak-to-peak change in input offset voltage over this range.

PSRR — The ratio of supply voltage range to the change in input offset voltage over the range, with the supplies varied separately or together.

A_{OL} — VOLTAGE GAIN - The ratio of the change in output voltage to the change in input voltage producing it.

t_r — TRANSIENT RESPONSE - The closed loop step function response of the amplifier under small signal conditions.

UNITY GAIN BANDWIDTH - The frequency at which the voltage gain of the amplifier is unity.

GAIN BANDWIDTH PRODUCT - The product of the gain and the bandwidth at a given gain.

P_{BW} — POWER BANDWIDTH - The maximum frequency at which the full output voltage swing is maintained.

SR — SLEW RATE (rate limiting) - The rate at which the output will move between full scale stops, measured in terms of volts per unit time. This limit to an ideal step function response is due to the non-linear behavior in an amplifier due to its limited ability to produce large, rapid changes in output voltage (slewing)...restricting it to rates of changes of voltage different than might be predicted by observing the small-signal frequency response.

SETTLING TIME - Time required for output waveform to remain within some percentage of final value.

PHASE MARGIN - (180° - ø1 - ø2) where ø1 is the phase shift at the frequency where the absolute magnitude of gain is unity. ø2 is the phase shift at a frequency much lower than the open loop bandwidth.

ATTENTION
OBSERVE PRECAUTIONS FOR HANDLING
ELECTROSTATIC SENSITIVE DEVICES

INTEGRATED CIRCUITS, LINEAR (CONT)

OP AMP

THIS APPLIES TO ALL DEVICES ON THIS PAGE.

VENDOR NUMBER	PART NUMBER	** ND	CC	++ RC	V_{OS} MAX mV	V_{OS} DRIFT MAX µV/°C	I_B MAX nA	I_{OS} MAX nA	I_{OS} DRIFT nA/°C	OL GAIN MIN dB	CMRR MIN dB	BW TYP MHz	SLEW RATE TYP V/µS	SUPPLY VOLT. MAX ±V	INTL COMP	REMARKS	CASE STYLE
										GENERAL PURPOSE							
741	156-0067-00	A	F+	5F	6.		500	200		86	70	1.	0.5	18	Yes		8 DIP
	-01	N	G-	5C												Tek selected - 100% tested of -00	
	-02	N	G	4G												Tighter I_{OS}, I_B	
	-03	N	H-	4F												National only	
	-05	N	H+													Tek selected for V_{OS}	
	-06	N	G	4H												Selected for ±20V supply voltage	
	-08	N	K													Selected for offset voltage drift 6µV/°C	
	-10	N	G+	4E												Tek selected; burn-in and tested at Tek	
	-11	N	G+	4D												RCA only	
	-12	A	G+	5F												Ceramic package	
	-13	A	H-	4D												Ceramic package with burn-in	
301A	156-0077-00	A	H		7.5	30	300	50	.3	88	70	1.+	0.5	18	No		TO-99
	-01	A	I-													Tek selected - 100T tested of -00	
301AN	156-0105-00	A	F+	5F	7.5	30	300	50	.3	88	70	1.+	0.5	18	No		8 DIP
	-02	A	H	4E												Ceramic package with burn-in	
	-04	A	H													National only	
324N	156-0495-00	A	G+	4F	7.		250	50		88	65	1.	.25	16	Yes	Quad, single supply	14 DIP
	-01	A	H-	4E												Tek selected for I_B	
	-02	A	H	4E												Ceramic package with burn-in	
358N	156-0853-00	A	G	4E	7.		250	50		88	70	1.	.25	16	Yes	Dual, single supply	8 DIP
	-02	A	H-	4E												Ceramic package	
1458	156-0158-00	A	G	5G	6.		500	200		86	70	1.	0.5	18	Yes	Dual 741C	8 DIP
	-01	N	G+	4D												Tek selected - 100% tested of -00	
	-02	N	H	4F												Tek selected for I_B	
	-03	N	H-	5D												Tek selected - 100% tested of -04	
	-04	A	H-	5D												Ceramic package	
	-05	N	H-	4E												RCA only	
	-07	A	H-	4B												Burn-in	
3900	156-1016-00	A	G+	2F	NA		200	±10% of I_B	.3% of I_B	62	NA	2.5	0.5	16	Yes	Quad, current differential	14 DIP
1558	156-1607-00	A	H		5.		500	200			70		0.5	22	Yes	Dual 741 with high V_{SS}	8 DIP
										VOLTAGE FOLLOWER							
302	156-0060-00	A	I		15.	20	30	NA		0	NA	2.5	10.	18	Yes	High slew rate	TO-99
	-01	A	I+													Tek selected - 100% tested	
LH0033CG	156-0475-00	A	N-		20.	25	.15	NA		0	NA	100	1400	20	NA	FET input buffer amp	TO-8
										HIGH SPEED							
318	156-0742-00	A	H+	4E	10.		500	200		86	70	15	50.	20	Yes	High slew rate	8 DIP
	-01	A	I-													Tek selected - 100% test of -00	
	-02	A	H	5D												Burn-in	
	-03															T.I. only	
HA2625	156-0317-00	A	K	4G	5.		25	25		98	74	100	35.	22.5	No	Wide band width	TO-99
	-02	N	L-													Tighter offset voltage drift	
	-03	A	K+	4D												Tek selected - 100% burn-in	
HA2655	156-0977-00	N	K-		5.		200	60		86	74	8	5.	20	Yes	Dual; screened	TO-99
CA3030A	156-0108-00	N	I+		2.		6K	1.6µ		66	80	60	7.	20	Yes		14 DIP
CA3030	156-0136-00	N	I		5.		24K	5µ		70	80	60	7.	12	No	High input current	14 DIP
NE5532	156-1272-00	A	J+	4E	4.		800	150		88	70	10	9.	22	Yes	Dual, low noise, high drive; ceramic package	8 DIP
NE5533	156-1446-00	A	J		4.		1500	300		88	70	13	22.			Dual, low noise, high drive	14 DIP
	-01	A	J+	3H												Guaranteed noise specifications	
	-02	A	J+													Ceramic package with burn-in	
NE5534	156-1338-00	A	I	4G	4.		1500	300		88	100	10	13.	22		Low noise, high drive	8 DIP
	-01	A	J	3G												Guaranteed noise specifications	
	-02	A	I													Burn-in	

** NEW DESIGN RECOMMENDATION FROM COMPONENT ENGINEERING:

A = Acceptable
N = Not Recommended

++ FOR RELIABILITY CODE, SEE PAGE 3-5.

INTEGRATED CIRCUITS, LINEAR (CONT)

OP AMP

VENDOR NUMBER	PART NUMBER	** ND	CC	++ RC	V_{OS} MAX mV	V_{OS} DRIFT MAX µV/°C	I_B MAX nA	I_{OS} MAX nA	I_{OS} DRIFT nA/°C	OL GAIN MIN dB	CMRR MIN dB	BW TYP MHz	SLEW RATE TYP V/µS	SUPPLY VOLT MAX ±V	INTL COMP	REMARKS	CASE STYLE
										PRECISION							
OP-07	156-1582-00	A			.15		7.	6			100	.6	.17	22			8 DIP
OP-10	156-1532-00	A			1-6		7.	6			100	.6	.17	22		Dual; ceramic package with burn-in	14 DIP
LM11CLH	156-1644-00	A	J+		.5	3	.2	.025		90	96			40			
OP-11	156-1537-00	A	L-		.5	10	300.	20	.10typ		100	2.	1.	22			14 DIP
OP-20	156-1588-00 -01	A A	J+		.6	1.5	25.	2.5			96			14.1		Plated	
308	156-0223-00 -01	A A	H+ I	4G	7.5	30	7.	1	0.01	88	80	1.+	0.3	18	No	Tek selected - 100% tested of -00	TO-99
308N	156-0512-00 -01 -02 -03	A A A A	G+ H- H H	4F 4F	7.5	30	7.	1	0.01	88	80	1.+	0.3	18	No	Low cost Tek selected - 100% tested of -00 Ceramic package with burn-in Ceramic package	8 DIP
308AN	156-0854-00 -01	A A	I+ I+	4D	0.5	5	7.	1	0.01	96	96	1.+	0.3	18	No	Burn-in	8 DIP
LM321H	156-0420-00	A	J+	3G	1.5	1	18.	2	.003typ	22	114	2.		20	No	Preamplifier	TO-99
LM321AH	156-0918-00	A	L+		0.4	0.2	15.	0.5	.003typ	22	126	2.		20	No	Preamplifier	TO-5
AD521K	156-1564-00	A			5.		40.	10			74		10	15			14 DIP
725	156-0685-00 -03	A A	J- J-		2.5	.6typ	125.	35	0.01typ	108		1.		22	No	Low drift; high gain, CMRR Burn-in	8 DIP
MC1456	156-0200-00 -01 -02	A A	H H H+	4G	10		30.	10		97	70	1.	2.5	18	Yes	Ceramic package	8 DIP
										FET INPUT							
TL062CP	156-1291-00	A	I		15	10typ	.4	0.2	§	69	70	.5-1	3.5	18	Yes	Dual, 0.5mA max supply	8 DIP
TL072CP	156-1191-00 -01	A A	J- J-	5E 4F	10	10typ	.2	0.05	§	88	76	3.	13.	18	Yes	Dual Bi-FET Burn-in	8 DIP
TL074CN	156-1200-00 -01	A A	J- I+	4G 4F	10	10typ	.2	0.05	§	88	76	3.	13.	18	Yes	Quad Bi-FET Burn-in	14 DIP
LF351N	156-1149-00 -01	A A	G H-	4D 4B	10	10typ	.2	0.10	§	88	70	5.	15.	18	Yes	Low cost, JFET input Burn-in	8 DIP
LF356H	156-0770-00 -02	A N	I I	4F 4E	10	5typ	.2	0.05	§	88	80	5.	12.	18	Yes	JFET input Burn-in	TO-99
LF356N	156-1156-00 -01	A A	H I-	4E 4E	10	5typ	.2	0.05	§	88	80	5.	12.	18	Yes	JFET input	8 DIP
LF412A	156-1688-00	A	K		1	10typ	.2	.1			70	4.	15.	18	Yes	Dual, low offset	
LF412CN	156-1699-00	A	K		3	20typ	.2	.1			70	4.	15.	18	Yes	Dual, low offset	
AD542J	156-1492-00 -01	A A	J+ J+		2	20typ	.05	.005		94	76	1.	3.	18	Yes	Monolithic FET input Burn-in	TO-99
AD542L	156-1741-00	A			.5	5typ	.025	.002			80	1.	3.	15			TO-99
AD545KH	156-1838-00				1	15typ	.01				70					Extremely low I_B	TO-99
CA3130	156-0686-00 -01 -02	A N A	H+ I+	4F	15	10typ	.05	0.03		94	70	15.	30.	8	No	MOS-FET input, CMOS output Tek-selected - 100% test of -00 Burn-in	TO-99
CA3140E CA3140AE	156-1134-00 -01	A	H H+	4G	15 5	8typ	.05	0.03		86	70	4.5	9.	18	Yes	MOS-FET input, Burn-in Plastic package, Not Burn-in	8 DIP
CA3140S	156-0921-00 -01 -02	A A A	I I I-	4E	15	8typ	.05	0.03		86	70	4.5	9.	18	Yes	MOS-FET input Burn-in Burn-in with straight leads	TO-99
CA3160	156-1114-00 -01	A A	H- I-	3F	15	8typ	.05	0.03		94	70	4.	10.	8	Yes	MOS-FET input, CMOS output Burn-in	8 DIP

ATTENTION
OBSERVE PRECAUTIONS FOR HANDLING
ELECTROSTATIC SENSITIVE DEVICES

THIS APPLIES TO ALL DEVICES ON THIS PAGE.

INTEGRATED CIRCUITS, LINEAR (CONT)

OP AMP

VENDOR NUMBER	PART NUMBER	** ND	CC	†† RC	V_{OS} MAX mV	V_{OS} DRIFT MAX µV/°C	I_B MAX nA	I_{OS} MAX nA	I_{OS} DRIFT nA/°C	OL GAIN MIN dB	CMRR MIN dB	BW TYP MHz	SLEW RATE TYP V/µS	SUPPLY VOLT MAX ±V	INTL COMP	REMARKS	CASE STYLE
										MISCELLANEOUS							
LM10CN	156-1719-00	A			.4.	5	30	2	.005		90			45	Yes	Op Amp and Voltage Reference	8 DIP
AD171J	156-0532-00	N	O+						§	100	100	3.	10	140	Yes	High voltage: 140V	Brick
STK457	156-1653-00	A	L-		26.					93typ				26	No	Dual power amplifier hybrid	Brick
µA727	156-0260-00	N	M+		2.	.6	12	2.5	.002	40	70	1.+		18	No	Differential output, int. temp controlled	TO-99
MC1436CG	156-0400-00	A	J-	3H	12.		90	25.		94	50	1.	2	30	Yes	High voltage: 60V	TO-99
2030H	156-1760-00	A			20.		2000	200		90typ		2.	6	18	No	Monolithic power amplifier	TO-220
CA3060H	156-0901-00	A	J		5.		5000	1000		30	70	.1	8	18	Yes	Transconductance	16 DIP
CA3080	156-0356-00 -01	A A	H- H+	4G	5.		5K	600			80	2.	50	18	Yes	Var9m, low leakage, high Z_o Burn-in	TO-99
CA3080A	156-0936-00	A	I+	4E	5.		5000	600		7.7 mmho	80	2.	50	18	Yes		TO-5
CA3080AE	156-1551-00	N	J+	5E	2.	3	5K	600		7.7 mmho	80	2.	50	18	Yes	Transconductance	8 DIP
CA3080E	156-0912-00 -01	A A	H+		5.		5000	600		6.7 mmho	80	2.	50	18	Yes	Transconductance Burn-in	8 DIP

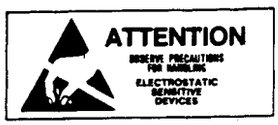

THIS APPLIES TO ALL DEVICES ON THIS PAGE.

†† CATALOG RELIABILITY CODES

USAGE/YR	CODE
≥10	1
≥100	2
≥1 000	3
≥10 000	4
≥100 000	5
≥1 000 000	6
≥10 000 000	7

FAILURE FREQ	CODE		%/YR (median)
1/100 000	A	=	.001
1/50 000	B	=	.002
1/20 000	C	=	.005
1/10 000	D	=	.01
1/5 000	E	=	.02
1/2 000	F	=	.05
1/1 000	G	=	.1
1/500	H	=	.2
1/200	I	=	.5
1/100	J	=	1.0+

For further explanation of this code, see page 4-72.

** NEW DESIGN RECOMMENDATION FROM COMPONENT ENGINEERING:

A = Acceptable
N = Not Recommended

COST CODE

(CC COLUMN)

CODE	≈ VALUE with -	≈ VALUE no suffix	≈ VALUE with +
A	.2¢	.5¢	.75¢
B	1.25¢	1.5¢	2¢
C	2.5¢	3¢	3.75¢
D	4.25¢	5¢	6¢
E	7¢	8¢	10¢
F	13¢	15¢	18¢
G	22¢	25¢	35¢
H	40¢	50¢	60¢
I	65¢	75¢	$1
J	$1.25	$1.50	$2
K	$2.50	$3	$3.75
L	$4.25	$5	$6
M	$7	$8	$10
N	$13	$15	$18
O	$22	$25	$35+

NOTE: Costs may vary from order to order due to order quantities, vendor, etc.

INTEGRATED CIRCUITS,TEK MADE

PART NUMBER	ND **	CIRCUIT DESCRIPTION	RC ††	CASE STYLE
GENERAL CIRCUITS				
155-0022-00	P	Channel Switch	5F	16 DIP
155-0022-01	A	Channel Switch	3I	16 DIP
155-0047-00	A	Dual Output Amplifier	3I	16 DIP
155-0067-02	P	Power Supply Regulator	4H	16 DIP
155-0031-01	X	Quad Timing Unit		
155-0091-00	A	Channel Switch	4F	16 LEAD TO-8
155-0106-00	X	Normalizing Circuit		24 DIP
155-0157-00	X	Digital Storage Vertical Control	3F	40 DIP
155-0158-00	X	Digital Storage Horizontal Control		40 DIP
155-0111-01	X	LED Array		
155-0112-01	X	Phototransistor Array		
155-0199-00	X	7L5 Vertical Control	2I	40 DIP
155-0205-00	X	Channel Switch		16 DIP
155-0244-00	P	System Logic Interface		
155-0253-00	P	Hi Speed Schmitt Trigger		
OPERATIONAL AMPLIFIERS				
155-0035-00	P	Quad Op Amp	4G	16 DIP
155-0057-00	P	2 Op Amps, 2 Current Sources		PLASTIC
155-0083-00	A	Dual Op Amp and Channel Switch	3H	17 MINIPAC
155-0116-00	P	Quad Op Amp	3G	17 DIP CER
MAIN FRAME LOGIC				
155-0009-00	A	Horizontal Lockout Logic	4H	16 DIP
155-0010-00	A	Chop Divider & Blanking (Type 3)		10 LEAD TO-5
155-0011-00	A	Clock and Chop Blanking	4E	16 DIP
155-0012-00	P	Z Axis Logic	4F	16 DIP
155-0013-00	A	Horizontal Chop & Alt Bin (Type 2)	4C	10 LEAD TO-5
KNOB READOUT SYSTEM				
155-0014-01	A	Analog to Decimal Converter	4G	16 DIP
155-0015-01	A	Data Switch	4F	16 DIP
155-0017-00	C	Decade Counter	4F	16 DIP
155-0018-00	C	Zero Logic	4F	16 DIP
155-0019-00	A	Decimal Point & Spacing	4F	16 DIP
155-0020-00	A	Output Assembler	4G	16 DIP
155-0021-01	A	Timing Generator	4H	16 DIP
155-0023-00	A	Character Generator	4F	16 DIP
155-0024-00	A	Character Generator	4F	16 DIP
155-0025-00	A	Character Generator	4F	16 DIP
155-0026-00	A	Character Generator		16 DIP
155-0027-00	A	Character Generator	4E	16 DIP
155-0086-00	X	Legend Generator		20 DIP
155-0087-00	X	Legend Generator		20 DIP
155-0088-00	X	Legend Generator	3G	20 DIP
155-0104-00	X	Legend Generator		20 DIP
155-0105-00	X	Legend Generator		20 DIP
155-0110-00	A	Legend Generator		20 DIP
155-0135-00	X	Legend Generator		20 DIP
155-0171-00	A	4 Decade Counter and Memory		16 MINIPAC
155-0198-00	X	Knob Readout Counter		40 DIP
READOUT SYSTEM				
155-0004-01	X	Beta Computer	3I	16 DIP
155-0005-00	X	Beta Computer	3I	16 DIP
155-0006-01	X	Beta Computer	3I	16 DIP
155-0007-01	X	Readout I	3G	16 DIP
155-0008-01	X	Readout II	3I	16 DIP
155-0114-00	A	Seven Segment Character Generator		16 DIP
155-0119-00	X	Five Digit BCD Counter	3I	40 DIP

PART NUMBER	ND **	CIRCUIT DESCRIPTION	RC ††	CASE STYLE
HORIZONTAL SYSTEM				
155-0028-00	C	Miller Integrator & Dly Pickoff	4G	10 LEAD TO-5
155-0028-01	C	Miller Integrator & Dly Pickoff	3H	10 LEAD TO-5
155-0048-01	P	Trigger & Sweep	3H	16 MINIPAC
155-0049-02	P	Sweep Control	5F	20 DIP
155-0055-00	P	Trigger & Sweep	3I	16 DIP
155-0056-00	C	Sweep Control	4H	16 DIP
155-0109-01	P	Trigger Circuit	4G	16 DIP
155-0121-00	X	Trigger Subsystem	2I	16 DIP
155-0122-00	P	Sweep Control	4F	16 DIP
155-0123-00	P	Sweep & Pickoff	4E	16 DIP
155-0124-00	P	Horizontal Preamplifier P-P	4F	16 DIP
155-0126-00	P	Trig Amp, Source Select	4F	20 DIP
155-0241-00	C	Horizontal Amplifier		Power Pkg
155-0151-00	X	Trigger Generator		20 DIP
155-0160-00	C	Trigger Amplifier, Source Select	3G	16 MINIPAC
155-0196-00	P	Trigger Circuit	4G	
155-0216-00	A	Plrt Inv. & Trigger Pickoff Ampl	3F	16 DIP
155-0217-00	P	Plrt Inv. & Trigger Pickoff Ampl	5G	16 DIP
AD/DA CIRCUITS				
155-0038-01	A	D/A Converter		16 DIP
155-0038-02	P	D/A Converter		16 DIP
155-0185-00	A	4 Decade DVM	3E	
VERTICAL AMPLIFIERS				
155-0187-00	A	ft Double Amplifier	3E	
155-0050-01	A	423 Vertical Amplifier	4E	20 DIP
155-0059-00	A	Gain Trim Amplifier	4E	12 LEAD TO-8
155-0061-00	A	f_t Double Amplifier	4E	16 DIP
155-0078-10	P	Diff/Var/Inv Amplifier	5E	16 MINIPAC
155-0207-00	X	Output Amplifier	3H	24 DIP
155-0218-00	P	Output Amplifier	4D	20 DIP
155-0273-00	P	Diff/Var/Inv Amplifier		14 DIP
155-0274-00	P	Diff/Var/Inv Amplifier		14 DIP
TV AND CRT CONTROL CIRCUITS				
155-0051-00	A	Z-Axis & HV Regulator	3H	20 DIP
155-0144-00	P	Sync Stripper	4F	16 DIP
155-0145-00	P	Pulse Output Amplifier	4E	16 DIP
155-0152-00	P	CRT Geometry Correction		16 DIP PLASTC
155-0154-00	P	Display Multiplexer	4G	20 DIP
155-0188-00	P	TV Sync Generator	3H	40 DIP
155-0247-00	P	Tape Controller	3E	40 DIP
PROBE CIRCUITS				
155-0076-00	C	Input Protection & Probe Logic	4G	16 MINIPAC
155-0215-00	D	Logic Analysis Input	4E	16 DIP

NOTES: 1. FOR COST AND APPLICATION INFORMATION CONTACT APPLICATION ENGINEERING, INTEGRATED CIRCUITS MANUFACTURING, 627-1037.

2. THE RELIABILITY INFORMATION COMES FROM REPORT 449-35 PUBLISHED BY THE RELIABILITY INFORMATION SERVICES GROUP, 643-8006 AND REFLECTS INFORMATION RECEIVED FROM PERIODS 204 TO 303.

** NEW DESIGN CODE FROM APPLICATION ENGINEERING, INTEGRATED CIRCUITS MANUFACTURING:

P = Preferred
A = Acceptable
X = Do Not Use
C = Call Application Engineering before using

INTEGRATED CIRCUITS,TEK MADE (CONT)

MICROCIRCUIT COVER LIDS

3

PART NUMBER	STANDARD MATERIAL	INSIDE CLEARANCE LENGTH	INSIDE CLEARANCE WIDTH	INSIDE CLEARANCE *HEIGHT (MINIMUM)	SHAPE
200-2183-00	85 White	.200	.185	.045	Rectangular
200-2274-00	85 White	.230 DIA		.050	Circular
200-1748-00	85 White	.250 DIA		.060	Circular
200-1748-01	85 Pink	.250 DIA		.140	Circular
200-2027-00	85 White	.250	.250	.045	Rectangular
200-1608-00	85 White	.300**	.100	.010 (Cannot be changed)	Rectangular
200-2181-00	85 White	.365	.200	.045	Rectangular
200-2114-00	85 Black	.422	.422	.040	Rectangular
200-2182-00	85 White	.422	.422	.040	Rectangular
200-2138-00	85 White	.590	.390	.055	Rectangular
200-1953-00	85 Black	.820	.295	.040	Rectangular

* HEIGHT CAN BE INCREASED.

** LENGTH IS VARIABLE UP TO 12". LID IS OPEN ON BOTH ENDS.

ALL THESE PARTS CAN BE PRODUCED IN:

252-0115-00	85 White
252-0115-01	85 Pink
252-0115-02	85 Green
252-0115-03	85 Black
252-0168-00	96 White

IF YOU CAN'T USE A STANDARD LENGTH OR MATERIAL, NEW PART NUMBERS CAN BE SET UP FOR PRODUCTION QUANTITIES: WORK ORDERS CAN BE USED FOR SHORT TERM USE.

CALL JOHN DI LAZZARO (627-3972), MIKE EHLERT (627-3975), AND BOB ROGERS (627-3971), FOR COST INFORMATION AND FURTHER ASSISTANCE.

COST CODE

(CC COLUMN)

CODE	≈ VALUE with -	≈ VALUE no suffix	≈ VALUE with +
A	.2¢	.5¢	.75¢
B	1.25¢	1.5¢	2¢
C	2.5¢	3¢	3.75¢
D	4.25¢	5¢	6¢
E	7¢	8¢	10¢
F	13¢	15¢	18¢
G	22¢	25¢	35¢
H	40¢	50¢	60¢
I	65¢	75¢	$1
J	$1.25	$1.50	$2
K	$2.50	$3	$3.75
L	$4.25	$5	$6
M	$7	$8	$10
N	$13	$15	$18
O	$22	$25	$35+

NOTE: Costs may vary from order to order due to order quantities, vendor, etc.

†† CATALOG RELIABILITY CODES

USAGE/YR	CODE
≥10	1
≥100	2
≥1 000	3
≥10 000	4
≥100 000	5
≥1 000 000	6
≥10 000 000	7

FAILURE FREQ	CODE		%/YR (median)
1/100 000	A	=	.001
1/50 000	B	=	.002
1/20 000	C	=	.005
1/10 000	D	=	.01
1/5 000	E	=	.02
1/2 000	F	=	.05
1/1 000	G	=	.1
1/500	H	=	.2
1/200	I	=	.5
1/100	J	=	1.0+

For further explanation of this code, see page 4-72.

SECTION 4

TABLE OF CONTENTS

	PAGE(S)
CROSS REFERENCE INDEXES	
TEK PART NUMBER TO VENDOR NUMBER	4-2 THRU 4-39
VENDOR NUMBER TO TEK PART NUMBER	4-40 THRU 4-57
PROGRAMMED IC'S	4-58 THRU 4-68
TEK-MADE	4-69
CASE STYLE DRAWINGS	
VOLTAGE REGULATORS	4-70 & 4-71
RELIABILITY NOTES	
FAILURE RATES	4-72
LEVELS OF QUALITY & RELIABILITY	4-73
APPLICATION NOTES	
CMOS LOGIC DRAWBACKS	4-74
CMOS DESIGN CHECKLIST	4-74
COMPARISON OF AVAILABLE OP AMPS	4-75 & 4-76
COMPARATIVE SPECS ON DIGITAL IC'S	4-77
ECL DESIGN CHECKLIST	4-78
PACKAGE NUMBER CODES	4-79
NOTES	4-80

COST CODE

(CC COLUMN)

CODE	A	B	C	D	E	F	G	H	I	J	K	L	M	N	O
≈ VALUE with +	.75¢	2¢	3.75¢	6¢	10¢	18¢	35¢	60¢	$1	$2	$3.75	$6	$10	$18	$35+
≈ VALUE no suffix	.5¢	1.5¢	3¢	5¢	8¢	15¢	25¢	50¢	75¢	$1.50	$3	$5	$8	$15	$25
≈ VALUE with -	.2¢	1.25¢	2.5¢	4.25¢	7¢	13¢	22¢	40¢	65¢	$1.25	$2.50	$4.25	$7	$13	$22

NOTE: Costs may vary from order to order due to order quantities, vendor, etc.

CATALOG WRITER: NANCY KING, EXT. 2582.

INTEGRATED CIRCUIT PART NUMBER INDEX

TEK PART NUMBER TO VENDOR NUMBER

PART NUMBER	** ND	VENDOR	VENDOR NO.	TYPE	* PAGE NO.	§§ ST
062-2318-00				Tech Sheet	1-20	EN
062-2985-00				Tech Sheet	1-20	CS
062-3448-00				Tech Sheet	1-20	EN
062-3728-00				Tech Sheet	1-20	CS
062-3798-00	U			Tech Sheet	1-20	EN
062-3919-00	U			Tech Sheet	1-20	EN
062-3924-00				Tech Sheet	1-20	EN
062-3942-00	U			Tech Sheet	1-20	EN
062-3953-00	U			Tech Sheet	1-20	EN
062-4099-00	U			Tech Sheet	1-20	EN
062-4113-00	U			Tech Sheet	1-20	EN
062-4170-00	A	Synertek	SYC2332	Mem Sel Guide	1-4	EN
062-4171-00	A	AMI	6831BC/E	Mem Sel Guide	1-4	EN
062-4171-01	A	AMI	6831BP	Mem Sel Guide	1-4	EN
062-4172-00	A	Signetics	2632FN	Mem Sel Guide	1-4	EN
062-4173-00	X	Motorola	MCM68A308L	Mem Sel Guide		EN
		Elec Arrays	P8308A			
062-4174-00	X	Motorola	MCM68A316E/L	Mem Sel Guide		EN
062-4175-00	N	AMD	AM9208DC	Mem Sel Guide	1-4	EN
062-4176-00	X	Signetics	82S291FN	Mem Sel Guide		EN
062-4177-00	N	Motorola	MCM6832L	Mem Sel Guide	1-4	EN
062-4178-00	X	Signetics	2607FN	Mem Sel Guide		EN
062-4179-00	X	Signetics	N2616N	Mem Sel Guide		EN
062-4180-00	X	Motorola	MCM66700	Mem Sel Guide		EN
062-4181-00	X	Gen Instr	RO-3-2513	Mem Sel Guide		EN
062-4182-00	A	Texas Instr	TMS4732	Mem Sel Guide	1-4	EN
		Motorola	MCM68A332			
062-4182-01	A	Texas Instr	TMS4732N	Mem Sel Guide	1-4	EN
062-4188-00	U			Tech Sheet	1-20	EN
062-4325-00	A	Mostek	MK36000P/J-4	Mem Sel Guide	1-4	EN
062-4325-01	A	Mostek	MK36000N-4	Mem Sel Guide	1-4	EN
062-4385-00	U			Tech Sheet	1-20	EN
062-4385-01	U			Tech Sheet	1-20	EN
062-4497-00	X	Elec Arrays	EA43356	Mem Sel Guide		EN
		Elec Arrays	EA43357			
		Elec Arrays	EA4000			
062-4499-00	X	Amer Micro	S4264	Mem Sel Guide		EN
062-4501-00	X	Natl Semic	52415	Mem Sel Guide		EN
		Natl Semic	MM52145			
062-4502-00	X	Amer Micro	S4216	Mem Sel Guide		EN
062-4503-00	A	Mostek	MK36000P/J-5	Mem Sel Guide	1-4	EN
062-4503-01	A	Mostek	MK36000N-5	Mem Sel Guide	1-4	EN
062-4504-00	A	Motorola	MCM68A332	Mem Sel Guide	1-4	EN
062-4558-00	X	Synertek	SYC2316A	Mem Sel Guide		EN
062-4576-00	X	Intel	C8316A	Mem Sel Guide		EN
062-4584-00	U		6531	Multi Funct		EN
062-4585-00	N	Natl Semic	MM5214	Mem Sel Guide	1-4	EN
062-4586-00	A	Gen Instr	8316A	Mem Sel Guide	1-4	EN
062-4587-00	X	Natl Semic	DM8598NA	Mem Sel Guide		EN
062-4588-00	U	Natl Semic	DM74188CHJ/N	Mem Sel Guide		EN
		Texas Instr	SN7488AJ			
062-4589-00	N	Signetics	N8205N	Mem Sel Guide	1-4	EN
062-4590-00	X	Natl Semic	MM5243	Mem Sel Guide		EN
062-4591-00	N	Motorola	MCM6590L	Mem Sel Guide	1-4	EN
064-4592-00	N	Natl Semic	MM5213	Mem Sel Guide	1-4	EN
062-4593-00	X	Signetics	N2530	Mem Sel Guide		EN
062-4654-00	A	Natl Semic	MM52132	Mem Sel Guide	1-4	DL
062-4670-00	A	Synertek	SYC2333	Mem Sel Guide	1-4	EN
062-4670-01	A	Synertek	SYC2333	Mem Sel Guide	1-4	EN
062-5456-00	A	NEC America	UPD23640	Mem Sel Guide	1-4	EN
062-5457-00	A	Synertek	SYC2364	Mem Sel Guide	1-4	EN
062-5549-00	A	Elec Arrays	EA8332A-DC	Mem Sel Guide	1-4	EN
062-5549-01	A	Elec Arrays	EA8332A-PC	Mem Sel Guide	1-4	EN
062-5863-00	U			Tech Sheet	1-20	EN
062-5875-00	U			Tech Sheet	1-20	EN
062-5876-00	U			Tech Sheet	1-20	EN
062-5879-00	A	Motorola	68B3641	Mem Sel Guide	1-4	EN
119-0848-00	A			Mem Sel Guide	1-8	CR
119-0967-00	A			Mem Sel Guide	1-8	CR
119-1011-00	A			Mem Sel Guide	1-8	CR
119-1182-00	A			Mem Sel Guide	1-8	CR
119-1376-00	A			Mem Sel Guide	1-8	CR

PART NUMBER	** ND	VENDOR	VENDOR NO.	TYPE	* PAGE NO.	§§ ST
156-0001-00	X	Fairchild	SL06083/960DC			CS
156-0002-00	X	Motorola	MC358AG			LS
156-0003-00	X	Motorola	MC357G			LS
156-0004-00	X	Motorola	MC354G			LS
156-0005-00	X	Fairchild	CμL958			NP
156-0006-00	X	Motorola	MC360G			LS
156-0007-00	X	Motorola	MC352G			LS
156-0008-00	U	Motorola	MC355G			DL
156-0009-00	U					DL
156-0010-00	X	Fairchild	HL18292			CS
156-0011-00	N	Fairchild	HL18341			CR
156-0012-00	N	Fairchild	HL18293			CR
156-0013-00	A	Fairchild	SL21770	Spec Funct	2-3	CR
		Natl Semic	LM710CH			
156-0014-00	X	Teledyne	831-BE	Linear		LS
156-0015-00	N	Fairchild	UA709HC	Linear		CR
		Raytheon	RC709T			
156-0016-00	X	Fairchild	9997DC			LS
156-0017-00	N	RCA	CA3015	Linear		CR
156-0018-00	X	Motorola	MC817P			LR
156-0019-00	X	Motorola	MC822P			LR
156-0020-00	X	Motorola	MC824P			LR
156-0021-00	X	Motorola	MC889P			LR
156-0021-01	X	Motorola	MC889P			LS
156-0022-00	X	Motorola	MC1013P			LR
156-0023-00	X	Motorola	MC1001P			LR
156-0024-00	X	Motorola	MC1004P			LR
156-0025-00	X	Motorola	MC1010P			LR
156-0025-01	X	Motorola	MC1010			DL
156-0026-00	U					DL
156-0027-00	U	Natl Semic	NATLM201	Linear		DL
156-0028-00	X	Motorola	MC826P			LS
156-0029-00	N	Fairchild	9016DC	TTL		CR
156-0030-00	X	Fairchild	7400PC/DC	TTL		NP
		Natl Semic	DM8000N/J			
		NEC America	μPB7400			
		Signetics	N7400N/F			
		Texas Instr	SN7400N/J			
156-0030-01		Texas Instr	7400	TTL		NP
156-0030-02		Texas Instr	7400	TTL		NP
156-0030-03	N	Fairchild	N7400PCQR/DCQR	TTL	1-18	CR
		Natl Semic	DM8000NA+/JA+			
		Signetics	N7400NB/FB			
		Texas Instr	SN7400NP3/JP4			
156-0031-00	N	Fairchild	7454PC	TTL	1-18	CR
		Natl Semic	DM7454N			
		Signetics	N7454A			
		Texas Instr	SN7454N			
156-0031-01	N		7454	TTL	1-18	CR
156-0031-02	X	Fairchild	7454PCQR/DCQR	TTL		CR
		Natl Semic	DM7454NA+/JA+			
		Signetics	N7454NB/FB			
		Texas Instr	SN7454NP3/JP4			
156-0032-00	X	Fairchild	7493PC	TTL		NP
		Natl Semic	DM7493N			
		Signetics	N7493A			
		Texas Instr	SN7493N			
156-0032-01	X		7493	TTL		NP
156-0032-02	X	Natl Semic	DM7493ANA+/JA+	TTL		NP
		Signetics	N7493NB/FB			
156-0032-03	N	Fairchild	7493DCQR/PCQR	TTL	1-15	CR
		Natl Semic	DM7493NA+/JA+			
		Signetics	N7493NB/FB			
		Texas Instr	SN7493NP3/JP4			
156-0033-00	A	RCA	CA3028A	Linear	3-1	CR
156-0033-01	X	RCA	CA3028A	Linear		DL
156-0034-00	X	Fairchild	7420PC	TTL		NP
		Natl Semic	DM7420N			
		Signetics	N7420A			
		Texas Instr	SN7420N			

** NEW DESIGN RECOMMENDATION FROM COMPONENT ENGINEERING:

A = Acceptable
N = Not Recommended
U = Undefined
X = Do Not Use

INTEGRATED CIRCUIT PART NUMBER INDEX (CONT)

TEK PART NUMBER TO VENDOR NUMBER

PART NUMBER	ND**	VENDOR	VENDOR NO.	TYPE	PAGE NO.*	ST§§
156-0034-01	X		7420	TTL		NP
156-0034-02	N	Fairchild	7420PCQR/DCQR	TTL	1-18	CR
		Natl Semic	DM8020NA+/JA+			
		Signetics	N7420NB/FB			
		Texas Instr	SN7420NP3/JP4			
156-0035-00	X	Fairchild	7430PC	TTL		NP
		Natl Semic	DM7430N			
		Signetics	N7430A			
		Texas Instr	SN7430N			
156-0035-01	X		7430	TTL		NP
156-0035-02	N	Fairchild	7430PCQR/DCQR	TTL	1-18	CR
		Natl Semic	DM8030NA+/JA+			
		Signetics	N7430NB/FB			
		Texas Instr	SN7430NP3/JP4			
156-0036-00	N	Fairchild	7440PC	TTL	1-14	CR
		Natl Semic	DM7440N			
		Signetics	N7440A			
		Texas Instr	SN7440N			
156-0036-01	N		7440	TTL	1-14	CR
156-0036-02	N	Fairchild	7440PCQR/DCQR	TTL	1-14	CR
		Natl Semic	DM7440NA+/JA+			
		Signetics	N7440NB/FB			
		Texas Instr	SN7440NP3/JP4			
156-0037-00	N	Fairchild	7451PC	TTL	1-18	CR
		Natl Semic	DM7451N			
		Signetics	N7451A			
		Texas Instr	SN7451N			
156-0037-01	N		7451	TTL	1-18	CR
156-0037-02	N	Fairchild	7451PCQR/DCQR	TTL	1-18	CR
		Natl Semic	DM7451NA+/JA+			
		Signetics	N7451NB/FB			
		Texas Instr	SN7451NP3/JP4			
156-0038-00	N	Fairchild	7472PC/DC	TTL	1-17	CR
		Natl Semic	DM7472N/J			
		∞Signetics	N7472AN/F			
		Texas Instr	SN7472N/J			
156-0038-01	N		7472	TTL	1-17	CR
156-0038-02	N	Fairchild	7472PCQR/DCQR	TTL	1-17	CR
		Signetics	N7472NB/FB			
		Texas Instr	SN7472NP3/JP4			
156-0039-00	X	Fairchild	7473PC	TTL		NP
		Signetics	N7473A			
		Texas Instr	SN7473N			
156-0039-01	X		7473	TTL		NP
156-0039-02	N	Fairchild	7473PCQR/DCQR	TTL	1-17	CR
		Signetics	N7473NB/FB			
		Texas Instr	SN7473NP3/JP4			
156-0040-00	N	Fairchild	7475PC	TTL	1-19	CR
		Natl Semic	DM7475N			
		Signetics	N7475N			
		Texas Instr	SN7475N			
156-0040-01	N		7475	TTL	1-19	CR
156-0040-02	N	Fairchild	7475PCQR/DCQR	TTL	1-19	CR
		Natl Semic	DM7475NA+/JA+			
		Signetics	N7475NB/FB			
		Texas Instr	SN7475NP3/JP4			
156-0041-00	X	Fairchild	7474PC/DC	TTL		NP
		∞ITT Semic	ITT7474			
		Natl Semic	DM7474N/J			
		∞NEC America	μPB7474C			
		Signetics	N7474AN/F			
		Texas Instr	SN7474N/J			
156-0041-01	X		7474	TTL		NP
156-0041-02	N	Fairchild	7474PC	TTL		CS
		Texas Instr	SN7474N			
156-0041-03	X		7474	TTL		NP
156-0041-04	X	DCA Reliab	7474	TTL		DL
		Natl Semic				
		Nippon Elec				
		Signetics				
		Texas Instr				
156-0041-05	N	Fairchild	7474PCQR/DCQR	TTL	1-17	CR
		∞Natl Semic	DM7474NA+/JA+			
		Signetics	N7474NB/FB			
		Texas Instr	SN7474NP3/JP4			
156-0042-00	N	Fairchild	7476PC	TTL	1-17	CR
		∞ITT Semic	ITT7476N			
		Signetics	N7476B			
		Texas Instr	SN7476N			

PART NUMBER	ND**	VENDOR	VENDOR NO.	TYPE	PAGE NO.*	ST§§
156-0042-01	N		7476	TTL	1-17	CR
156-0042-02	N	Signetics	N7476NB/FB	TTL	1-17	CR
		Texas Instr	SN7476NP3/JP4			
156-0043-00	X	Fairchild	7402PC	TTL		NP
		Natl Semic	DM7402N			
		Signetics	N7402A			
		Texas Instr	SN7402N			
156-0043-01	X		7402	TTL		NP
156-0043-02	N		7402	TTL		CS
156-0043-03	N	Fairchild	7402PCQR/DCQR	TTL	1-18	CR
		Natl Semic	DM7402NA+/JA+			
		Signetics	N7402NB/FB			
		Texas Instr	SN7402NP3/JP4			
156-0044-00	N	Motorola	MC890P			CS
156-0044-01	N	Motorola	MC890P			CS
156-0045-00	N	Motorola	MC892P			CS
156-0046-00	X	Motorola	MC8871			DL
156-0047-00	X	Fairchild	7410PC	TTL		NP
		Natl Semic	DM7410N			
		∞NEC America	μPB7410C			
		Signetics	N7410N			
		Texas Instr	SN7410N			
156-0047-01	X		7410	TTL		NP
156-0047-02	N	Fairchild	F7410PCQR/DCQR	TTL	1-18	CR
		Natl Semic	DM7410NA+/JA+			
		Signetics	N7410NB/FB			
		Texas Instr	SN7410NP3/JP4			
156-0048-00	A	Plessey	SL3046CDP	Array	3-2	CR
		RCA	CA3046			
		∞Silicon Gen	SG3821N			
156-0048-01	A		CA3046	Array	3-2	CR
156-0048-02	N	Comp Concpts		Array	3-2	CR
		DCA Reliab	CA3046			
156-0048-03	N	Motorola	SC77161P	Array	3-2	CR
		∞Plessey	SL3045			
		RCA	89320			
156-0049-00	N	Fairchild	SL08871			CR
		RCA	CA741CT			
156-0049-01	N		UA741C			CS
156-0049-02	N	∞DCA Reliab	UA741C			CR
		Fairchild	UA741HCQR			
		Motorola	MC1741CGDS			
		Natl Semic	LM741CH/A+			
156-0050-00	X	Motorola	MC825P			EN
156-0051-00	X	Signetics	S2005K	MOS		OB
		Texas Instr	TMS7C3003LR			
156-0051-01	X	Texas Instr	TMS37C3003LA			
156-0052-00	N	Motorola	MC1469R	Linear	3-1	CR
156-0052-01	X	Motorola	MC1469R			NP
156-0053-00	A	∞AMD	723HC	Linear	3-1	CR
		Fairchild	SL21721			
		Natl Semic	LM723CH			
		Silicon Gen	SG9637-723			
156-0053-01	A	Natl Semic	LM723CH/A+	Linear	3-1	CR
		Silicon Gen	SG723CT			
156-0054-00	X	Motorola	MC1006P			LR
156-0055-00	X	Signetics	S2003K	MOS		OB
		Texas Instr	TMS7B3001LR			
156-0055-01	X	Texas Instr	TMS7B3001LA	MOS		DL
156-0056-00	X	Motorola	MC1023P	ECL		LR
156-0057-00	N	Fairchild	7401PC/DC	TTL	1-18	CR
		Natl Semic	DM8001N/J			
		∞Signetics	N7401A			
		Texas Instr	SN7401N/J			
156-0057-01	N	Texas Instr	SN7401N	TTL	1-18	CR
156-0057-02	N	Fairchild	7401PCQR/DCQR	TTL	1-18	CR
		Natl Semic	DM7401NA+/JA+			
		Texas Instr	SN7401NP3/JP4			
156-0058-00	X	Fairchild	7404PC	TTL		NP
		Signetics	N7404A			
		Texas Instr	SN7404N			

* LACK OF ENTRY IN COLUMN INDICATES ITEM IS NOT LISTED IN MFR/TEK SECTION OF CATALOG. THIS INDICATES ITEM IS OBSOLETE, NOT RECOMMENDED FOR NEW DESIGN, OR OF LIMITED USE (SUCH AS SPECIALIZED CUSTOM MASK.)

∞ NOT CURRENT VENDOR.

§§ FOR STATUS CODES, SEE PAGE 4-39.

INTEGRATED CIRCUIT PART NUMBER INDEX (CONT)

TEK PART NUMBER TO VENDOR NUMBER

PART NUMBER	** ND	VENDOR	VENDOR NO.	TYPE	• PAGE NO.	§§ ST
156-0058-01	X		7404	TTL		NP
156-0058-02	N	Fairchild	7404PCQR/DCQR	TTL	1-14	CR
		Signetics	N7404NB/FB			
		Texas Instr	SN7404NP3/JP3			
156-0059-00	N	Motorola	MC891P			CS
156-0060-00	A	Natl Semic	LM302H	Op Amp	3-3	CR
156-0060-01	A		302	Op Amp	3-3	CS
156-0061-00	N	Fairchild	7442PC/DC	TTL	1-16	CR
		∞Motorola	MC7442P			
		Natl Semic	DM7442N/J			
		Signetics	N7442N/F			
		Texas Instr	SN7442N/J			
156-0061-01	N		7442	TTL	1-16	CR
156-0061-02	N	Fairchild	7442PCQR/DCQR	TTL	1-16	CR
		Natl Semic	DM8842NA+/JA+			
		Signetics	N7442NB/FB			
		Texas Instr	SN7442NP3/JP4			
156-0062-00	N	Fairchild	7486PC/DC	TTL	1-18	CR
		Natl Semic	DM7486N/J			
		Signetics	N7486N/F			
		Texas Instr	SN7486N/J			
156-0062-01	N		7486	TTL	1-18	CR
156-0062-02	N	Fairchild	7486PCQR/DCQR	TTL	1-18	CR
		Natl Semic	DM7486NA+/JA+			
		Signetics	N7486NB/FB			
		Texas Instr	SN7486NP3/JP4			
156-0063-00	X	Motorola	MC1660S	ECL		DL
156-0064-00	N	Motorola	MC867P			PP
156-0065-00	N	RCA	CA3045F	Array	3-2	CR
		∞Siliconix	SI3045			
156-0065-01	N	∞RCA	CA3045	Array	3-2	CR
156-0066-00	X	Motorola	MC1437P			DL
156-0067-00	A	Fairchild	μA741TC	Op Amp	3-3	CR
		NEC America	μPC741C			
		RCA	85145			
		Texas Instr	μA741CP			
156-0067-01	N		741C	Op Amp	3-3	CR
156-0067-02	N	Nippon Elec	μPC741C	Op Amp	3-3	CR
		RCA	85147			
		Signetics	CR859N			
156-0067-03	N	Natl Semic	LM741CN/CJ	Op Amp	3-3	CR
156-0067-04	U		741C	Op Amp		NP
156-0067-05	N		741C	Op Amp	3-3	CR
156-0067-06	N	∞Motorola	1741CU	Op Amp	3-3	CR
		RCA	86485			
		Texas Instr	UA741CJG			
156-0067-07	U		741C	Op Amp		NP
156-0067-08	N	Analog Dev	AD741KN	Op Amp	3-3	CR
		Precision	OP-02CP			
156-0067-09	U	Fairchild	SL25693	Op Amp		DL
156-0067-10	N		741C	Op Amp	3-3	CR
156-0067-11	N	RCA	CA741CG	Op Amp	3-3	CR
156-0067-12	A	Fairchild	UA741RC	Op Amp	3-3	CR
		∞Motorola	MC1741CU			
		NEC Elec	UPC151O			
		Texas Instr	μA741CJG			
156-0067-13	A	∞Motorola	MC1741CUDS	Op Amp	3-3	CR
		NEC Elec	UPC151D			
		Texas Instr	UA741CJG4			
156-0068-00	N	RCA	CA3046	Array	3-2	CR
156-0069-00	A	Motorola	MC1550G	Linear	3-1	CR
156-0070-00	X	Raytheon	RC4131	Linear		DL
156-0071-00	A	Fairchild	UA723DC	Linear	3-1	CR
		Motorola	MC1723CL			
		∞Natl Semic	LM723CJ			
		Silicon Gen	SG723CJ			
156-0071-01	A		723C	Linear	3-1	CR
156-0071-02	A	Fairchild	UA723PCQR	Linear	3-1	CR
		Motorola	MC1723CLDS			
		Silicon Gen	SG723CJ/10305			
156-0072-00	X	Fairchild	74121PC/DC	TTL		NP
		Natl Semic	DM74121N/J			
		Signetics	N74121N/F			
		Texas Instr	SN74121N/J			

PART NUMBER	** ND	VENDOR	VENDOR NO.	TYPE	* PAGE NO.	§§ ST
156-0072-01	X		74121	TTL		NP
156-0072-02	N	Fairchild	74121PCQR/DCQR	TTL	1-19	CR
		Natl Semic	DM8852NA+/JA+			
		Signetics	N74121NB/FB			
		Texas Instr	SN74121NP3/JP4			
156-0073-00	X	Fairchild	7496PC	TTL		NP
		Natl Semic	DM8572N			
		Signetics	N7496A			
		Texas Instr	SN7496N			
156-0073-01	X	Fairchild	SL82078	TTL		NP
		Natl Semic	DM7496NA+/JA+			
		Signetics	N7496FII-B			
		Texas Instr	SN7496NP3/JP4			
156-0073-02	N	Fairchild	7496PCQR/DCQR	TTL	1-20	CR
		Natl Semic	DM7496NA+/JA+			
		Signetics	N7496NB/FB			
		Texas Instr	SN7496NP3/JP4			
156-0074-00	A	Fairchild	μA733C	Linear		CR
156-0074-01	N		733C	Linear		DL
156-0075-00	N	Fairchild	74151APC/DC	TTL	1-15	CR
		Natl Semic	DM74151AN/J			
		∞Signetics	N74151B			
		∞Texas Instr	SN74151AN			
156-0075-01	N		74151	TTL	1-15	CR
156-0075-02	N	Fairchild	74151PCQR/DCQR	TTL	1-15	CR
		Natl Semic	DM74151NA+/JA+			
156-0076-00	X	Motorola	SC8331P	ECL		EN
156-0077-00	A	Fairchild	SL23750	Op Amp	3-3	CR
		Natl Semic	LM301AH			
156-0077-01	A		LA301A	Op Amp	3-3	CR
156-0078-00	X	Fairchild	74154PC	TTL		NP
		Natl Semic	DM8213N			
		Signetics	N74154N			
		Texas Instr	SN74154N			
156-0078-01	X		74154	TTL		NP
156-0078-02	N	Fairchild	74154PCQR/DCQR	TTL	1-16	CR
		Natl Semic	DM74154NA+/JA+			
		Signetics	N74154NP/FB			
		Texas Instr	SN74154NP3/JP4			
156-0079-00	X	Fairchild	7490APD	TTL		NP
		Natl Semic	DM7490AN			
		Signetics	N7490A			
		Texas Instr	SN7490AN			
156-0079-01	X		7490	TTL		NP
156-0079-02	N	Fairchild	7490PCQR/DCQR	TTL	1-15	CR
		Natl Semic	DM7490NA+/JA+			
		∞Signetics	N7490FII-B			
		Texas Instr	SN7490ANP3/JP4			
156-0080-00	X	Fairchild	74141PC	TTL		OB
		∞ITT Semic	ITT74141N			
		Natl Semic	DM74141N			
		Texas Instr	SN74141N			
156-0080-01	X		7441	TTL		OB
156-0081-00	X	Fairchild	9601PC/DC	TTL		NP
		∞Motorola	MC9601P/L			
		Natl Semic	DM8850N			
		Signetics	N8T22N/F			
156-0081-01	X	Fairchild	SL81682	TTL		NP
		Motorola	MC9601NDS/JDS			
		Signetics	8T22FII-B			
156-0081-02	N	Fairchild	9601PCQR/DCQR	TTL	1-19	CR
		Signetics	8T22NB/FB			
156-0082-00	U	Fairchild	μA722	Linear		OT
156-0082-01	U		9300DC	Linear		OB
156-0083-00	N	∞AMD	9300PC	TTL		CR
		Fairchild	9300PC/DC			
156-0083-01	X		9300PC	TTL		DL
156-0084-00	N	∞AMD	AM9310PC	TTL	1-15	CR
		Fairchild	U7B931059X			
156-0084-01	N	Fairchild	9310PCQR/DCQR	TTL	1-15	CR
156-0084-02	N	Fairchild	9310PCQR/DCQR	TTL	1-15	CR
156-0085-00	X	∞AMD	AM9328PC	TTL		OT
		Fairchild	9328PC			

** NEW DESIGN RECOMMENDATION FROM COMPONENT ENGINEERING:

A = Acceptable
N = Not Recommended
U = Undefined
X = Do Not Use

INTEGRATED CIRCUIT PART NUMBER INDEX (CONT)

TEK PART NUMBER TO VENDOR NUMBER

PART NUMBER	** ND	VENDOR	VENDOR NO.	TYPE	* PAGE NO.	§§ ST
156-0085-01	X		9328	TTL		OB
156-0086-00	X	Fairchild	7480PC	TTL		OB
		Signetics	N7480A			
		Texas Instr	SN7480N			
156-0086-01	X		7488	TTL		OB
156-0087-00	N	Fairchild	SL81212	TTL	1-14	CR
		Natl Semic	DM8283N/J			
		Signetics	N7483N/F			
		Texas Instr	SN7483AN/J			
156-0087-01	N		7483	TTL	1-14	CR
156-0087-02	N	Fairchild	7483PCQR/DCQR	TTL	1-14	CR
		Natl Semic	DM7483NA+/JA+			
		Signetics	N7483NB/FB			
		Texas Instr	SN7483NP3/JP4			
156-0088-00	N	Fairchild	74180PC	TTL	1-19	CR
		Natl Semic	DM74180N			
		Signetics	N74180A			
		Texas Instr	SN74180N			
156-0088-01	N		74180	TTL	1-19	CR
156-0088-02	N	Fairchild	74180PCQR/DCQR	TTL	1-19	CR
		Natl Semic	DM74180NA+/JA+			
		Signetics	N74180NB/FB			
		Texas Instr	SN74180NP3/JP4			
156-0089-00	N	Fairchild	74193PC/DC	TTL	1-15	CR
		∞NEC America	μPB74193C			
		Signetics	N74193N/F			
		Texas Instr	SN74193N/J			
156-0089-01	N		74193	TTL		CR
156-0089-02	N	Fairchild	74193PCQR/DCQR	TTL	1-15	CR
		Signetics	N74193NB/FB			
		Texas Instr	SN74193NP3/JP4			
156-0090-00	X					DL
156-0091-00	X	Signetics	N8292A	TTL		LR
156-0091-01	N		8292	TTL		CR
156-0092-00	N	Fairchild	7405PC/DC	TTL	1-14	CR
		Natl Semic	DM7405N/J			
		Signetics	N7405N/F			
		Texas Instr	SN7405N/J			
156-0092-01	N		7405	TTL	1-14	CR
156-0092-02	N	Fairchild	7405PCQR/DCQR	TTL	1-14	CR
		Natl Semic	DM7405NA+/JA+			
		Signetics	N7405NB/FB			
		Texas Instr	SN7405NP3/JP4			
156-0093-00	X	Fairchild	7416PC	TTL		NP
		Natl Semic	DM7416N			
		Signetics	N7416A			
		Texas Instr	SN7416N			
156-0093-01	X		7416	TTL		NP
156-0093-02	N	Fairchild	7416PCQR/DCQR	TTL	1-14	CR
		Natl Semic	DM8016NA+/JA+			
		Signetics	N7416NB/FB			
		Texas Instr	SN7416NP3/JP4			
156-0094-00	N	Natl Semic	DS75451NA+/JA+	TTL	1-17	CR
		∞Signetics	N75451N			
		Texas Instr	SN75451NP3/JP4			
156-0094-01	N		75451	TTL		CR
156-0094-02	A	Natl Semic	DS75451NA+/JA+	TTL	1-17	CR
		Texas Instr	SN75451NP3/JP4			
156-0095-00	A	RCA	CA3051	Linear		CR
156-0096-00	A	Natl Semic	LM311H	Spec Function	2-3	CR
		Silicon Gen	SG311T			
		∞Texas Instr	LM311L			
156-0096-01	A	Natl Semic	LM311	Spec Function	2-3	CR
156-0096-02	A	Natl Semic	LM311H/A+	Spec Function	2-3	CR
		Silicon Gen	SG311T			
156-0097-00	N	Texas Instr	SN74196N/J	TTL	1-15	CR
156-0097-01	N	Texas Instr	SN74196NP3/JP4	TTL	1-15	CR
156-0098-00	N	Fairchild	74153PC	TTL	1-15	CR
		Natl Semic	DM74153N			
		Signetics	N74153B			
		Texas Instr	SN74153N			
156-0098-01	N		74153	TTL	1-15	CR
156-0098-02	A	Fairchild	74153PCQR/DCQR	TTL	1-15	CR
		Natl Semic	DM74153NA+/JA+			
		Signetics	N74153NB/FB			
		Texas Instr	SN74153NP3/JP4			
156-0099-00	X		CA3051	Linear		DL

§§ FOR STATUS CODES, SEE PAGE 4-39.

PART NUMBER	** ND	VENDOR	VENDOR NO.	TYPE	* PAGE NO.	§§ ST
156-0100-00	N	∞Signetics	N74H102A	TTL		CR
		Texas Instr	SN74H102N/J			
156-0100-02	N	Texas Instr	74H102	TTL		CS
156-0101-00	N	Natl Semic	DM74L93N/J	TTL		CR
		Texas Instr	SN74L93N/J			
156-0101-01	X		74L93	TTL		CS
156-0102-00	X	Texas Instr	TMS4100	Mem Sel Guide		DL
156-0103-00	X	Texas Instr	TMS4100	Mem Sel Guide		DL
156-0104-00	X	Texas Instr	TMS4100	Mem Sel Guide		DL
156-0105-00	A	Natl Semic	LM301AN	Op Amp	3-3	CR
		Nippon Elec	μPC301AC			
		RCA	CA301AG			
		Texas Instr	LM301AP			
156-0105-01	A		LM301AN	Op Amp		CR
156-0105-02	A	Motorola	LM301AJDS	Op Amp	3-3	CR
		Texas Instr	LM301AJG4			
156-0105-03	U		UPC451C	Op Amp		SC
156-0105-04	A	Texas Instr	LM301AJG4	Op Amp	3-3	CR
156-0106-00	N	RCA	CA3039	Array	3-2	CR
156-0106-01	A	RCA	CA3039	Array	3-2	CR
156-0107-00	X	Motorola	SL17084L	Op Amp		CS
156-0108-00	A	RCA	CA3030AE	Op Amp	3-3	CS
156-0110-00	N	Fairchild	74155PC/DC	TTL	1-16	CR
		Natl Semic	DM74155N/J			
		Signetics	N74155N/F			
		Texas Instr	SN74155N/J			
156-0110-01	N		74155	TTL	1-16	CR
156-0110-02	N	Fairchild	74155DCQR/PCQR	TTL	1-16	CR
		Natl Semic	DM74155NA+/JA+			
		Signetics	N74155NB/FB			
		Texas Instr	SN74155NP3/JP4			
156-0111-00	N	Fairchild	74145PC	TTL	1-16	CR
		Natl Semic	DM8849N			
		Signetics	N74145B			
		Texas Instr	SN74145N			
156-0111-01	N		74145	TTL	1-16	CR
156-0111-02	N	Fairchild	74145PCQR/DCQR	TTL	1-16	CR
		Natl Semic	DM74145NA+/JA+			
		Signetics	N74145NB/FB			
		Texas Instr	SN74145NP3/JP4			
156-0112-00	N	Fairchild	7426PC	TTL	1-18	CR
		Natl Semic	DM7426N			
		Signetics	N7426A			
		Texas Instr	SN7426N			
156-0112-01	N		7426	TTL	1-18	CR
156-0112-02	N	Fairchild	7426PCQR/DCQR	TTL	1-18	CR
		Natl Semic	DM7426NA+/JA+			
		Signetics	N7426NB/FB			
		Texas Instr	SN7426NP3/JP4			
156-0113-00	N	Natl Semic	DM74L00N	TTL		CR
		Texas Instr	SN74L00N			
156-0113-01	N		74L00	TTL		CR
156-0113-02	N		74L00	TTL		CR
156-0113-03	N	Natl Semic	DM74L00NA+	TTL		PP
		Texas Instr	SN74L00NP3			
156-0114-00	N	Fairchild	SN7492PC/DC	TTL	1-15	CR
		Natl Semic	DM7492AN/J			
		Signetics	N7492N/J			
		Texas Instr	SN7492AN/J			
156-0114-01	N		7492	TTL	1-15	CR
156-0114-02	N	Fairchild	7492PCQR/DCQR	TTL	1-15	CR
		Natl Semic	DM7492NA+/JA+			
		Signetics	N7492NB/FB			
		Texas Instr	SN7492NP3/JP4			
156-0115-00	X					DL
156-0116-00	A	Motorola	MC1711CL	Spec Function	2-3	CR
156-0117-00	N	Fairchild	74161PC/DC	TTL	1-15	CR
		∞ITT Semic	ITT74161N			
		Signetics	N74161N/F			
		Texas Instr	SN74161N/J			

* LACK OF ENTRY IN COLUMN INDICATES ITEM IS NOT LISTED IN MFR/TEK SECTION OF CATALOG. THIS INDICATES ITEM IS OBSOLETE, NOT RECOMMENDED FOR NEW DESIGN, OR OF LIMITED USE (SUCH AS SPECIALIZED CUSTOM MASK).

∞ NOT CURRENT VENDOR.

INTEGRATED CIRCUIT PART NUMBER INDEX (CONT)

TEK PART NUMBER TO VENDOR NUMBER

PART NUMBER	** ND	VENDOR	VENDOR NO.	TYPE	* PAGE NO.	§§ ST
156-0117-01	N		74161	TTL	1-15	CR
156-0117-02	N	Fairchild	74161PCQR/DCQR	TTL	1-15	CR
		Signetics	N74161NB/FB			
		Texas Instr	SN74161NP3/JP4			
156-0118-00	X	∞Fairchild	SL57898	TTL		NP
		Natl Semic	DM74S112N/J			
		∞Signetics	N74S112N			
		Texas Instr	SN88792N/J			
156-0118-01	X		74S112	TTL		NP
156-0118-02	X	Texas Instr	SN74S112N	TTL		CR
156-0118-03	A	Natl Semic	DM74S112JA+	TTL	1-17	CR
		∞Signetics	N74S112FIIB			
		Texas Instr	SN74S112JP3			
156-0119-00	X	Motorola	MC411P	TTL		DL
156-0120-00	N	Fairchild	7495PC/DC	TTL	1-20	CR
		Natl Semic	DM7495N/J			
		Signetics	N7495AN/F			
		Texas Instr	SN7495AN/J			
156-0120-01	N		7495	TTL	1-20	CR
156-0120-02	N	Fairchild	7495PCQR/DCQR	TTL	1-20	CR
		Natl Semic	DM7495NA+/JA+			
		Texas Instr	SN7495NP3/JP4			
156-0121-00	A	Motorola	MC4024P	Spec Funct	1-19 & 2-3	CR
156-0121-01	X	Motorola	MC4024	TTL		DL
156-0121-02	N	Motorola	MC4024PDS/LDS	TTL		CR
156-0122-00	N	Signetics	NE531H/CC3807H	Op Amp		CR
156-0122-01	N		NE531V	Op Amp		CR
156-0123-00	N	Fairchild	7485PC	TTL	1-14	CR
		Natl Semic	DM8201N			
		Signetics	N7485B			
		Texas Instr	SN7485N			
156-0123-01	N		7485	TTL	1-14	CR
156-0123-02	N	Fairchild	7485PCQR/DCQR	TTL	1-14	CR
		Natl Semic	DM7485NA+/JA+			
		Signetics	N7485NB/FB			
		Texas Instr	SN7485NP3/JP4			
156-0124-00	A	Motorola	MC4044	Spec Funct	2-3	CR
156-0124-01	X		MC4044	Spec Funct		DL
156-0124-02	N	Motorola	MC4044PDS/LDS	Spec Funct	2-3	CR
156-0125-00	N	Fairchild	74157PC	TTL	1-15	CR
		Natl Semic	DM74157N			
		Signetics	N74157B			
		Texas Instr	SN74157N/J			
156-0125-01	N		74157	TTL	1-15	CR
156-0125-02	N	Fairchild	74157PCQR/DCQR	TTL	1-15	CR
		Natl Semic	DM74157NA+/JA+			
		Signetics	N74157NB/FB			
		Texas Instr	SN74157NP3/JP4			
156-0126-00	U	Monsanto	MAN1	Array		DL
		Texas Instr	TIXL302			
156-0127-00	N	Fairchild	74192PC/DC	TTL	1-15	CR
		Signetics	N74192N/F			
		Texas Instr	SN74192N/J			
156-0127-01	N		74192	TTL	1-15	CS
156-0127-02	N	Fairchild	74192PCQR/DCQR	TTL	1-15	CR
		Signetics	N74192NB/FB			
		Texas Instr	SN74192NP3/JP4			
156-0128-00	X	Fairchild	7447APC/DC	TTL		NP
		Natl Semic	DM7447AN/J			
		∞Signetics	N7447N/F			
		Texas Instr	SN7447AN/J			
156-0128-01	N	Natl Semic	DM7447ANA+/JA+	TTL	1-16	CR
		Texas Instr	SN7447AN3/J4			
156-0129-00	X	Fairchild	7408PC/DC	TTL		NP
		Natl Semic	DM7408N/J			
		Signetics	N7408N/F			
		Texas Instr	SN7408N/J			
156-0129-01	X		7408	TTL		NP
156-0129-02	N	Fairchild	7408PCQR/DCQR	TTL	1-18	CR
		Natl Semic	DM8008NA+/JA+			
		Signetics	N7408NB/FB			
		Texas Instr	SN7408NP3/JP4			

PART NUMBER	** ND	VENDOR	VENDOR NO.	TYPE	* PAGE NO.	§§ ST
156-0130-00	A	Motorola	MC1496G	Linear	3-1	CR
156-0130-01	N	Motorola	MC1496G	Linear		CR
		Silicon Gen	SG9399/1496T			
156-0130-02	N	Motorola	SC77162GH	Linear	3-1	CR
156-0131-00	N	Fairchild	74164PC	TTL	1-20	CR
		∞ITT Semic	ITT74164N			
		Natl Semic	DM74164N			
		Signetics	N74164A			
		Texas Instr	SN74164N			
156-0131-01	N		74164	TTL	1-20	CR
156-0131-02	N	Fairchild	74164PCQR/DCQR			
		Natl Semic	DM74164NA+/JA+			
		Signetics	N74164NA+/JA+			
		Texas Instr	SN74164NP3/JP4			
156-0132-00	X	Harris Corp	HA2-911-5	Op Amp		CR
156-0133-00	X	Intel	1601	Mem Sel Guide		DL
156-0133-01	U					OB
156-0134-00	N	Texas Instr	TL710CP	Spec Funct		CR
156-0134-01	N		N5710V	Spec Funct		CR
156-0135-00	X	AMD	1101A	Mem Sel Guide		LS
		∞Natl Semic	MM1101AN			
		∞Signetics	2501B			
156-0136-00	A	RCA	CA3030	Op Amp	3-3	CR
156-0136-01	U	RCA	CA3030X			DL
156-0137-00	N	Prec. Mono	AIMDAC-I00AD-Q2	Spec Funct	2-2	OT
136-0138-00	A	Texas Instr	SN74154N	TTL	1-16	CR
156-0138-01	X		75154	TTL		CR
156-0138-02	N	Texas Instr	SN74154NP3/JP4	TTL	1-16	CR
156-0139-00	A	Texas Instr	SN74150P	TTL	1-16	CR
156-0139-01	X		75150	TTL		CR
156-0139-02	N	Texas Instr	SN75150NP3/JP4	TTL	1-16	CR
156-0140-00	X	Fairchild	7417PC	TTL		NP
		Natl Semic	DM7417N			
		Signetics	N7417A			
		Texas Instr	SN7417N			
156-0140-01	X		7417	TTL		NP
156-0140-02	N	Fairchild	7417PCQR/DCQR	TTL	1-14	CR
		Natl Semic	DM8017NA+/JA+			
		Signetics	N7417NB/FB			
		Texas Instr	SN7417NP3/JP4			
156-0141-00	X	Fairchild	74156PC/DC	TTL		NP
		Natl Semic	DM74156N/J			
		Signetics	N74156N/F			
		Texas Instr	SN74156N/J			
156-0141-01	X		74156	TTL		NP
156-0141-02	N	Fairchild	74156PCQR/DCQR	TTL	1-16	CR
		Natl Semic	DM74156NA+/JA+			
		Signetics	N74156NB/FB			
		Texas Instr	SN74156NP3/JP3			
156-0142-00	N	Fairchild	74197PC	TTL	1-15 & 19	CR
		Natl Semic	DM74197N			
		Texas Instr	SN74197N			
156-0142-01	N		74197	TTL	1-15 & 19	CR
156-0142-02	N	Fairchild	74197PCQR/DCQR	TTL	1-15	CR
		Natl Semic	DM74197NA+/JA+			
		Texas Instr	SN74197NP3/JP4			
156-0143-00	X	Fairchild	74122PC/DC	TTL		NP
		∞Signetics	N74122N			
		Texas Instr	SN74122N/J			
156-0143-01	X		74122	TTL		NP
156-0143-02	N	Fairchild	74122PCQR/DCQR	TTL	1-19	CR
		Texas Instr	SN74122NP3/JP4			
156-0144-00	N	Fairchild	7412PC/DC	TTL	1-18	CR
		∞Natl Semic	DM7412A			
		∞Signetics	N7412N/J			
		Texas Instr	SN7412N/J			

** NEW DESIGN CODE FROM COMPONENT ENGINEERING

A = Acceptable
N = Not Recommended
U = Imdefined
X = Do Not Use

INTEGRATED CIRCUIT PART NUMBER INDEX (CONT)

TEK PART NUMBER TO VENDOR NUMBER

PART NUMBER	** ND	VENDOR	VENDOR NO.	TYPE	* PAGE NO.	§§ ST
156-0144-01	N		7412	TTL	1-18	CR
156-0144-02	N	Fairchild	7412PCQR/DCQR	TTL	1-18	CR
		Natl Semic	DM7412NA+/JA+			
		Texas Instr	SN7412NP3/JP4			
156-0145-00	X	Fairchild	7438PC/DC	TTL		NP
		∞ITT Semic	ITT7438N			
		Natl Semic	DM7438N/J			
		Signetics	N7438N/F			
		Texas Instr	SN7438N/J			
156-0145-01	X		7438	TTL		NP
156-0145-02	N	Fairchild	7438PCQR/DCQR	TTL	1-14	CR
		Natl Semic	DM7438NA+/JA+			
		Signetics	N7438NB/FB			
		Texas Instr	SN7438NP3/JP4			
156-0146-00	X	Fairchild	74165PC	TTL		NP
		Natl Semic	DM74165N			
		Signetics	N74165N			
		Texas Instr	SN74165N			
156-0146-01	X		74165	TTL		NP
156-0146-02	N	Fairchild	74165PCQR/DCQR			
		Natl Semic	DM74165NA+/JA+			
		Signetics	N74165NB/FB			
		Texas Instr	SN74165NP3/JP4			
156-0147-00	X	Gen Instr	RO32513	MOS		CR
		∞Signetics	N2513/CM2140N			
156-0147-01	X		2513	MOS		CR
156-0148-00	N	∞AMD	AM9304PC	TTL	1-14	CR
		Fairchild	U6B930459X			
156-0148-01	N		9304	TTL		CS
156-0148-02		Fairchild	9304PCQR/DCQR	TTL		CR
156-0149-00	N	Fairchild	7413PC	TTL	1-14 & 18	CR
		ITT Semic	ITT7413N			
		Natl Semic	DM7413N			
		Signetics	N7413A			
		Texas Instr	SN7413N			
156-0149-01	N		7413	TTL	1-18	CR
156-0149-02	N	Fairchild	7413PCQR/DCQR	TTL	1-18	CR
		Natl Semic	DM7413NA+/JA+			
		Signetics	N7413NB/FB			
		Texas Instr	SN7413NP3/JP4			
156-0150-00	N	Fairchild	7437PC	TTL	1-14	CR
		Natl Semic	DM7437N			
		Signetics	N7437N			
		Texas Instr	SN7437N			
156-0150-01	N		7437	TTL	1-14	CR
156-0150-02	N	Fairchild	7437PCQR/DCQR	TTL	1-14	CR
		Signetics	N7437NB/FB			
		Texas Instr	SN7437NP3/JP4			
156-0151-00	X	Fairchild	μA715C	Op Amp		DL
156-0152-00	X	Signetics	N8201N	TTL		LR
156-0152-01	N		MC8201	TTL		CR
156-0153-00	X	Fairchild	7406PC	TTL		NP
		Natl Semic	DM/SN7406			
		Signetics	N7406N			
		Texas Instr	SN7406N			
156-0153-01	N		7406	TTL	1-14	CR
156-0153-02	N	Fairchild	7406PCQR/DCQR	TTL	1-14	CR
		Natl Semic	DM8006NA+/JA+			
		Signetics	N7406NB/FB			
		Texas Instr	SN7406NP3/JP4			
156-0154-00	X	Signetics	2511K	MOS		LS
156-0155-00	N	Fairchild	74H74PC/DC	TTL		CS
		Natl Semic	DM74H74N/J			
		∞Signetics	N74H74N			
		Texas Instr	SN74H74N/J			
156-0155-01	N		SN74H74N	TTL		CS
156-0156-00	N	Fairchild	74H40PC/DC	TTL		CS
		Natl Semic	DM74H40N/J			
		∞Signetics	N74H40N			
		Texas Instr	SN74H40N/J			
156-0156-01	N		SN74H40N	TTL		CS
156-0157-00	U	Motorola	MCF8010	Linear		CR
156-0158-00	A	Fairchild	μA1458TC/RC	Op Amp	3-3	CR
		∞Motorola	MC1458P1/U			
		NEC America	μPC1458C			
		RCA	CA1458G			
		Signetics	MC1358N			

§§ FOR STATUS CODES, SEE PAGE 4-39.

PART NUMBER	** ND	VENDOR	VENDOR NO.	TYPE	* PAGE NO.	§§ ST
156-0158-01	N		MC1458	Op Amp	3-3	CR
156-0158-02	N		MC1458	Op Amp	3-3	CR
156-0158-03	N		MC1458	Op Amp	3-3	CR
156-0158-04	A	∞Motorola	MC1458U	Op Amp	3-3	CR
		Natl Semic	LM1458J			
		NEC Electron	UPC251D			
		Texas Instr	N99320JG			
156-0158-05	A	RCA	CA1458G	Op Amp	3-3	CR
156-0158-06						SC
156-0158-07	A	∞Motorola	MC1458UDS	Op Amp	3-3	CR
		Natl Semic	LM1458N/A+			
		Texas Instr	MC1458JG4			
156-0159-00	X	Motorola	MC4048P	TTL		OB
156-0159-01	X		MC4048P	TTL		DL
156-0160-00	N	Natl Semic	DM74L20N/J	TTL		CR
		Texas Instr	SN74L20N/J			
156-0161-00	N	∞Fairchild	74L78PC	TTL		CS
		∞Motorola	MC74L78P			
		Natl Semic	DM74L78N/J			
		∞Signetics	77811-000			
		Texas Instr	SN74L78N/J			
156-0162-00	A	Fairchild	UA733DC	Linear	3-1	CR
156-0162-01	X		733C	Linear		NP
156-0162-02	N	∞Motorola	MC1733CLDS	Linear	3-1	CR
		Natl Semic	LM733CN/A+			
156-0163-00	N	Fairchild	7411PC	TTL	1-18	CR
		Natl Semic	DM7411N			
		Signetics	N7411A			
		∞Texas Instr	SN7411N			
156-0163-01	N		7411	TTL	1-18	CR
156-0163-02	N	Fairchild	7411PCQR/DCQR	TTL	1-18	CR
		Natl Semic	DM7411NA+/JA+			
		Signetics	N7411NB/FB			
156-0164-00	X	Prec. Mono	DAC-01CP			OB
156-0165-00	X	Fairchild	7425PC	TTL		NP
		Natl Semic	DM7425N			
		Signetics	N7425N			
		Texas Instr	SN7425N			
156-0165-01	X		7425	TTL		NP
156-0165-02	N	Fairchild	7425PCQR/DCQR	TTL	1-18	CR
		Natl Semic	DM8025NA+/JA+			
		Signetics	N7425NB/FB			
		Texas Instr	SN7425NP3/JP4			
156-0166-00	X	Signetics	8228	TTL		OB
156-0167-00	X	Signetics	2510K	MOS		OB
156-0167-01	X		2510K	MOS		OB
156-0168-00	X	∞Clare-Pendar	321-0056-6	MOS		CR
		Gen Instr	AY-5-2376			
		SMC Microsys	KR2376-STP			
156-0169-00	N	Motorola	MC836P			CS
156-0170-00	N	Motorola	MC846P			CR
156-0170-01	N		SN15646N			CR
156-0171-00	X	Fairchild	7432PC	TTL		NP
		Natl Semic	DM7432N			
		Signetics	N7432A			
		Texas Instr	SN7432N			
156-0171-01	X		7432	TTL		NP
156-0171-02	N	Fairchild	7432PCQR/DCQR	TTL	1-18	CR
		Natl Semic	DM7432NA+/JA+			
		Signetics	N7432NB/FB			
		Texas Instr	SN7432NP3/JP4			
156-0172-00	X	AMD	SN74123N/J	TTL		NP
		Fairchild	74123PC/DC			
		∞NEC America	μPB74123C			
		Signetics	CY323/N74123N/F			
156-0172-01	X		74123	TTL		NP

* LACK OF ENTRY IN COLUMN INDICATES ITEM IS NOT LISTED IN MFR/TEK SECTION OF CATALOG. THIS INDICATES ITEM IS OBSOLETE, NOT RECOMMENDED FOR NEW DESIGN, OR OF LIMITED USE (SUCH AS SPECIALIZED CUSTOM MASK.)

∞ NOT CURRENT VENDOR.

INTEGRATED CIRCUIT PART NUMBER INDEX (CONT)

TEK PART NUMBER TO VENDOR NUMBER

4

PART NUMBER	** ND	VENDOR	VENDOR NO.	TYPE	* PAGE NO.	§§ ST
156-0172-02	N	∞AMD	SN74123PCB2/DCB2	TTL	1-19	CR
		Fairchild	74123PCQR/DCQR			
		Natl Semic	DM74123NA+/JA+			
		Signetics	N74123NB/FB			
		Texas Instr	SN74123NP3/JP4			
156-0173-00	U	Aertech Ind				DL
156-0174-00	N	∞Natl Semic	DM74111N/J	TTL	1-17	CR
		∞Signetics	N74111A			
		Texas Instr	SN74111N/J			
156-0174-01	N		74111	TTL	1-17	CR
156-0174-02	N	Texas Instr	SN74111NP3/JP4	TTL	1-17	CR
156-0175-00	X	Fairchild	74191PC/DC	TTL		NP
		Natl Semic	DM74191N/J			
		∞Signetics	N74191N			
		Texas Instr	SN74191N/J			
156-0175-01	X		74191	TTL		NP
156-0175-02	N	Fairchild	74191PCQR/DCQR	TTL		CR
		Natl Semic	DM74191NA+/JA+			
		Texas Instr	SN74191NP3/JP4			
156-0176-00	N	Fairchild	SL22648	Linear	3-1	CR
		Natl Semic	LM309KC			
156-0177-00	N	Fairchild	75107APC	TTL	1-16	CR
		Motorola	MC75107P			
		Texas Instr	SN74107AN			
156-0177-01	X		7510A	TTL		CR
156-0177-02	N	Fairchild	75107PCQR/DCQR	TTL	1-16	CR
		Motorola	MC75107NDS/JDS			
		Texas Instr	SN75107ANP3/JP4			
156-0178-00	N	Fairchild	7427PC	TTL	1-18	CR
		Natl Semic	DM7427N			
		Signetics	N7427N			
		Texas Instr	SN7427N			
156-0178-01	N		7427	TTL	1-18	CR
156-0178-02	N	Fairchild	7427PCQR/DCQR	TTL	1-18	CR
		Natl Semic	DM8027NA+/JA+			
		Signetics	N7427NB/FB			
		Texas Instr	SN7427NP3/JP4			
156-0179-00	U	Amer Micro	S4006	Mem Sel Guide		LS
		Mostek	MK4006P-6			
156-0179-01	U		MK4006P	Mem Sel Guide		CS
156-0180-00	X	Fairchild	74S00PC/DC	TTL		NP
		Natl Semic	DM74S00N/J			
		Signetics	N74S00N/F			
		Texas Instr	SN74S00N/J			
156-0180-01	X		74S00	TTL		NP
156-0180-02	X		74S00	TTL		NP
156-0180-03	X	Texas Instr	SN74S00N	TTL		CS
156-0180-04	A	Fairchild	74S00PCQR/DCQR	TTL	1-18	CR
		Natl Semic	DM74S00NA+/JA+			
		Signetics	N74S00NB/FB			
		Texas Instr	SN74S00NP3/JP4			
156-0181-00	N	Natl Semic	DS8830N/J	TTL	1-17	CS
		Texas Instr	SN74183N/J			
156-0182-00	A	Motorola	MC10105P	ECL	1-11	CR
156-0182-01	A		10105	ECL	1-11	CR
156-0182-02	A	Motorola	SC22689P105	ECL	1-11	CR
156-0183-00	X		NA747C	Linear		OB
156-0184-00	X	Fairchild	9000PC	TTL		OB
		Natl Semic	DM74104N			
		Signetics	N74104A			
		Texas Instr	SN29000N			
156-0185-00	X	Texas Instr	SN15862N			OB
156-0186-00	X	Fairchild	7403PC	TTL		NP
		ITT Semic	ITT7403N			
		Natl Semic	DM7403N			
		Signetics	N7403A			
		Texas Instr	SN7403N			
156-0186-01	X		7403	TTL		NP
156-0186-02	N	Fairchild	7403PCQR/DCQR	TTL	1-18	CR
		Natl Semic	DM8003NA+/JA+			
		Signetics	N7403NB/FB			
		Texas Instr	SN7403NP3/JP4			
156-0187-00	X	Texas Instr	SN15830N			OB
156-0188-00	N	Natl Semic	DM74H106N	TTL		CS
		Texas Instr	SN74H106N			
156-0189-00	N	Natl Semic	DM74H04N	TTL		CS
		Texas Instr	SN74H04N			

PART NUMBER	** ND	VENDOR	VENDOR NO.	TYPE	* PAGE NO.	§§ ST
156-0190-00	X	Fairchild	7450PC	TTL		OB
		Natl Semic	DM7450N			
		Signetics	N7450N			
		Texas Instr	SN7450N			
156-0191-00	X	Texas Instr	SN54100	TTL		OB
156-0192-00	N	Texas Instr	SN7489N	Mem Sel Guide	1-5	CR
156-0192-01	U		7489			NP
156-0192-02	N	Texas Instr	SN7489N3	Mem Sel Guide	1-5	CR
156-0193-00	N	Signetics	N74100N	TTL	1-19	CR
		Texas Instr	SN74100N			
156-0193-01	X		74100	TTL		OT
156-0193-02	N	Texas Instr	SN74100NP3/JP4	TTL	1-19	CR
156-0194-00	X	Fairchild	7491PC	TTL		OB
		Natl Semic	DM7491AN			
		Signetics	N7491N			
		Texas Instr	SN7491AN			
156-0195-00	X	Texas Instr	SN15835N			OB
156-0196-00	X	Fairchild	9020	TTL		OB
156-0197-00	A	∞Natl Semic	LM3146N	Array	3-2	CR
		Plessey	SL3086			
		RCA	CA3086			
		∞Silicon Gen	SG3886N			
156-0197-01	N		CA3086	Array	3-2	CR
156-0197-03	N		CA3086	Array	3-2	CR
156-0198-00	N	Motorola	MC4035P	TTL		CS
156-0199-00	N	Signetics	N82S25N/F	Mem Sel Guide	1-5	CR
156-0199-01	U		83S25			CS
156-0200-00	A	Motorola	MC1456P1	Op Amp	3-4	CR
		Signetics	MC1456N			
156-0200-01	U		MC1456	Op Amp	3-4	CR
156-0200-02	A	Motorola	MC1456U	Op Amp	3-4	CR
156-0201-00	N	Natl Semic	DM74L90N/J	TTL		PP
		Texas Instr	SN74L90N/J			
156-0202-00	N	Motorola	MC4018P	TTL	1-15	CR
156-0202-01	N		4018P	TTL		CR
156-0202-02	N	Motorola	MC4018NDS/JDS	TTL	1-15	CR
156-0203-00	X	Texas Instr	SN7418N	TTL		DL
156-0203-01	X		7418	TTL		NP
156-0204-00	X	Motorola	MC1669L	ECL		CR
		Plessey	SP1669B			
156-0204-01	X		1669L	ECL		CS
156-0204-02	X		1669L	ECL		DL
156-0205-00	A	Fairchild	F10102PC/DC	ECL	1-11	CR
		Motorola	MC10102P/L			
		∞NEC Electron	μPB10102C/D			
		Signetics	N10102N/F			
		∞Texas Instr	SN10102N/J			
156-0205-01	A		10102	ECL	1-11	CR
156-0205-02	A	Fairchild	F10102PC/DCQR	ECL	1-11	CR
		Motorola	SC22689L102			
		Signetics	10102FB			
156-0206-00	N	Motorola	MC75325N/J	TTL	1-17	CR
		Texas Instr	SN75325N/J			
156-0206-01	X		75325	TTL		NP
156-0206-02	N	Texas Instr	SN75325NP3/JP4	TTL	1-17	CR
156-0207-00	U	Motorol	MC1440G	Linear		LS
156-0208-00	N	Silicon Gen	SG8195/3501AJ	Linear	3-1	CR
156-0208-01	N		SG501P	Linear	3-1	CR
156-0209-00	X	Elec Arrays	EA3021	Mem Sel Guide		OB
156-0210-00	U	Elec Arrays	EA3304	MOS		OB
156-0211-00	U	Elec Arrays	EA3305-7	MOS		OB
156-0212-00	U	Elec Arrays	EA3310-7	MOS		OB
156-0213-00	U	Elec Arrays	EA3311-7	MOS		OB
156-0214-00	X	Elec Arrays	EA3503-7	Mem Sel Guide		OB
156-0215-00	X	Elec Arrays	EA120	MOS		OB
156-0216-00	X	Elec Arrays	EA1208-2	MOS		OB
156-0217-00	X	Elec Arrays	EA1210-7	MOS		OB
156-0218-00	N	Fairchild	9334PC/DC	TTL		CR

** NEW DESIGN RECOMMENDATION FROM COMPONENT ENGINEERING:

A = Acceptable
N = Not Recommended
U = Undefined
X = Do Not Use

INTEGRATED CIRCUIT PART NUMBER INDEX (CONT)

TEK PART NUMBER TO VENDOR NUMBER

PART NUMBER	ND **	VENDOR	VENDOR NUMBER	TYPE	PAGE NO. *	ST §§
156-0218-01	N		9334	TTL		CR
156-0218-02	N	Fairchild	9334PCQR/DCQR	TTL	1-19	CR
156-0219-00	X	AMD	9318PC/DC	TTL		NP
		Fairchild	74148PC			
		Signetics	N74148B			
		Texas Instr	SN74148N			
156-0219-01	X		9318	TTL		NP
156-0219-02	N	∞AMD	9318PCB2/DCB2	TTL	1-17	CR
		Fairchild	9318DCQR			
		Texas Instr	SN74148N3/J4			
156-0220-00	N	∞AMD	93L08PC/DC	TTL		CR
		Fairchild	F93L08PC/DC			
156-0220-01	N		93L08	TTL		CR
156-0221-00	X	Fairchild	74175PC	TTL		NP
		Natl Semic	DM74175N			
		NEC America	μPB74175C			
		Signetics	N74175N			
		Texas Instr	SN74175N			
156-0221-01	X		74175	TTL		NP
156-0221-02	N	Fairchild	74175PCQR/DCQR	TTL	1-17	CR
		Natl Semic	DM74175NA+/JA+			
		Signetics	N74175NB/FB			
		Texas Instr	SN74175NP3/JP4			
156-0222-00	N	Fairchild	74174PC	TTL	1-17	CR
		Natl Semic	DM74174N			
		Signetics	N74174B			
		Texas Instr	SN74174N			
156-0222-01	N		74174	TTL	1-17	CR
156-0222-02	N	Fairchild	74174PCQR/DCQR	TTL	1-17	CR
		Natl Semic	DM8557NA+/JA+			
		Signetics	N74174NB/FB			
		Texas Instr	SN74174NP3/JP4			
156-0222-03	N		74174	TTL	1-17	MP
156-0223-00	A	∞Intersil	ITS6637	Op Amp	3-4	CR
		Natl Semic	LM308H			
156-0223-01	A		LM308	Op Amp	3-4	CR
156-0224-00	A	Motorola	MC1658L	Spec Funct	1-12 & 2-3	CR
156-0224-01	A	Fairchild	11C58DCQR	Spec Funct	1-12 & 2-3	CR
		Motorola	SC62528L658			
156-0225-00	X	∞Motorola	MC1661/PL	ECL		LR
		Plessey	SP1661DP/DG			
156-0226-00	A	Motorola	MC1662P/L	ECL	1-11	CR
		Plessey	SP1662DP/DG			
156-0226-01	A		MC1662L	ECL		CR
156-0226-02	A	Motorola	SC2528L662	ECL	1-11	CR
156-0226-03						SC
156-0227-00	A	Motorola	MC1664P/L	ECL	1-11	CS
		Plessey	SP1664BDP/DG			
156-0227-01	A	Motorola	MC1664L1	ECL	1-11	CR
156-0228-00	A	Plessey	SP1670DG	ECL	1-11	CR
156-0229-00	A	Motorola	MC10109L/P	ECL	1-11	CR
		∞NEC America	μPB10109C			
		Signetics	10109N/F			
156-0229-01	A	Motorola	MC10109PDS	ECL	1-11	CR
156-0229-02						SC
156-0230-00	A	Fairchild	F10131PC/DC	ECL	1-11	CR
		Motorola	MC10131P/L			
		∞NEC America	μPB10131PC/DC			
		Signetics	N10131N/F			
156-0230-01	A		10131	ECL		CR
156-0230-02	A	Motorola	MC10131LDS	ECL	1-11	CR
156-0231-00	U	Amer Micro	C08685	MOS		LS
156-0232-00	U	Amer Micro	C08686	MOS		LS
156-0233-00	U	Amer Micro	C08687	MOS		LS
156-0234-00	U	Amer Micro	C08688	MOS		LS
156-0235-00	U	Amer Micro	C08684	MOS		LS
156-0236-00	X	Amer Micro	C01841	Mem Sel Guide		LS
156-0237-00	X	Amer Micro	C01839	Mem Sel Guide		LS
156-0238-00	X	Amer Micro	C01840	MOS		LS
156-0239-00	U	Amer Micro	C01836	MOS		LS
156-0240-00	U	Amer Micro	C01837	MOS		LS
156-0241-00	U	Amer Micro	C01843	MOS		LS
156-0242-00	U	Amer Micro	C01838	MOS		LS
156-0243-00	U	Amer Micro	C01842	MOS		LS

PART NUMBER	ND **	VENDOR	VENDOR NUMBER	TYPE	PAGE NO. *	ST §§
156-0244-00	X	Intel	1301-0044	Mem Sel Guide		OB
156-0245-00	N	Natl Semic	DM85L60N/J	TTL		CR
		∞Texas Instr	SN74L192N			
156-0245-01	N		74L192	TTL		CS
156-0246-00	X		1765	MOS		OB
156-0247-00	X	Fairchild	U7B932251X	TTL		OB
156-0248-00	X	Fairchild	74163PC	TTL		NP
		ITT Semic	ITT74163N			
		Natl Semic	DM74163AN			
		Signetics	N74163B			
		Texas Instr	SN74163N			
156-0248-01	X		74163	TTL		NP
156-0248-02	N	Fairchild	74163PCQR/DCQR	TTL	1-15	CR
		Natl Semic	DM74163ANA+/JA+			
		Signetics	N74163NB/FB			
		Texas Instr	SN74163NP3/JP4			
156-0249-00	X	Signetics	N8203N	TTL		LR
156-0249-01	N		8203	TTL		CR
156-0250-00	N	Signetics	N8202N	TTL		CR
156-0250-01	N		8202	TTL		CR
156-0251-00	N	Natl Semic	LM361H	Spec Funct		CR
		∞Signetics	NE529K			
156-0251-01	N	Natl Semic	LM361H/A+			CR
		∞Signetics	NE529K			
156-0252-00	A	Fairchild	F10106PC/DC	ECL	1-11	CR
		Motorola	MC10106P/L			
		Signetics	10106B/F			
156-0252-01	X		10106	ECL		CR
156-0252-02	A	Motorola	SC22689P106	ECL	1-11	CR
156-0253-00	X	Motorola	MC1040P	TTL		LR
156-0254-00	X	Signetics	SP391N	TTL		LR
156-0255-00	X	Signetics	SP380N	TTL		LR
156-0255-01	N		SP380A	TTL		CR
156-0256-00	X	Signetics	SP381N	TTL		CR
156-0257-00	X	∞Fairchild	7444PC	TTL		DL
		Signetics	N7444N/F			
		Texas Instr	SN7444AN/J			
156-0257-01	X		7444	TTL		DL
156-0258-00	X	Motorola	MC1034P	TTL		LR
156-0259-00	A	RCA	CA3083	Array	3-2	CR
		Sprague Elec	ULN2083			
156-0259-01	N		CA3083	Array	3-2	CR
156-0259-02	N	∞Motorola	CA3083EX	Array	3-2	CR
156-0259-03						TC
156-0260-00	A	Fairchild	μA727HC	Op Amp	3-5	CR
156-0261-00	X		74160N	TTL		OB
156-0262-00	U	Signetics	N8205F	TTL		OB
156-0263-00	X	Signetics	2513NX/CM3840	MOS		CM
156-0264-00	A	Fairchild	μA7818UC	Linear	3-1	CR
		∞Silicon Gen	SG7818CN			
		∞Signetics	μA78HV18CU			
156-0265-00	X	Motorola	MC1016P	ECL		LR
156-0266-00	A	Motorola	MC1648P/L	Spec Funct	1-11 & 2-3	CR
		Plessey	SP1648BDP/BDG			
156-0266-01	A	Motorola	SC22695P048	Spec Funct	1-12 & 2-3	CR
		Plessey	SP1648			
156-0267-00	N	∞Cramer/Stle	21452-000	TTL		CR
		∞Fairchild	29365-001			
		∞Motorola	56644-000			
		Natl Semic	DM74L30N/J			
		∞Signetics	77811-000			
		Texas Instr	SN74L30N/J			
156-0267-01	N		74L30	TTL		CR
156-0268-00	N	∞Fairchild	74L02PC/DC	TTL		CR
		∞Motorola	SN74L02N/J			
		Natl Semic	DM74L02N/J			
		∞Signetics	77811-000			
		Texas Instr	SN74L02N/J			

* LACK OF ENTRY IN COLUMN INDICATES ITEM IS NOT LISTED IN MFR/TEK SECTION OF CATALOG. THIS INDICATES ITEM IS OBSOLETE, NOT RECOMMENDED FOR NEW DESIGN, OR OF LIMITED USE (SUCH AS SPECIALIZED CUSTOM MASK).

∞ NOT CURRENT VENDOR.

§§ FOR STATUS CODES, SEE PAGE 4-39.

INTEGRATED CIRCUIT PART NUMBER INDEX (CONT)

TEK PART NUMBER TO VENDOR NUMBER

PART NUMBER	** ND	VENDOR	VENDOR NO.	TYPE	* PAGE NO.	§§ ST
156-0268-01	N		74L02	TTL		CR
156-0269-00	N	∞Fairchild	74H183PC/DC	TTL		CS
		∞Motorola	56644-000			T
		∞Natl Semic	58210-000			
		∞Signetics	77811-000			
		Texas Instr	SN74H183N/J			
156-0269-01	N		74H183N			CS
156-0270-00	U	Signetics	SP300A	TTL		DL
156-0271-00	X	Signetics	SP317A			DL
156-0272-00	X	Signetics	SP384N	TTL		LS
156-0272-01	N		SP384A	TTL		CS
156-0273-00	N	Signetics	N8T13B/F	TTL	1-17	CR
156-0274-00	N	∞AMD	AM9615PC	TTL	1-17	CR
		Fairchild	9615DC			
156-0274-01	N	Fairchild	9615DCQR	TTL	1-17	CR
156-0275-00	N	∞AMD	9614DC	TTL	1-17	CR
		Fairchild	SL23900			
156-0275-01	N	Fairchild	9614PCQR/DCQR	TTL	1-17	CR
156-0276-00	N	Texas Instr	SN74LS13N/J	TTL		CS
156-0277-00	A	Fairchild	µA7805UC	Linear	3-1	CR
		Motorola	MC7805CT			
		Natl Semic	LM340T-5			
156-0277-01	A	Fairchild	µA7805UCQR	Linear	3-1	CR
		Motorola	MC7805CTD			
156-0278-00	A	Plessey	SP8630BDP/DG	ECL		LS
156-0279-00	X	Signetics	2513/CM3551N	MOS		DL
156-0279-01	X		2413	MOS		DL
156-0280-00	N	∞Fairchild	29365-001	TTL		CR
		∞Motorola	56644-000			
		Natl Semic	DM74L72N/J			
		∞Signetics	77811-000			
		Texas Instr	SN74L72N/J			
156-0281-00	A	Motorola	SPQ1626	Array	3-2	CR
		RCA	CA3725			
156-0282-00	A	Motorola	MC1660L	ECL	1-11	CR
		Plessey	SP1660B			
156-0282-01	A	Motorola	MC1660L	ECL	1-11	CR
156-0282-02	A	Motorola	SC62528L660	ECL	1-11	CR
		Plessey	SP1660BDG			
156-0284-00	X	Beckman	DD700	TTL		NP
		Natl Semic	DS8880N			
156-0284-01	N		8880	TTL		NP
156-0284-02	X		8880	TTL		DL
156-0284-03	N	Natl Semic	DS8880NA+/JA+	TTL	1-16	CR
156-0285-00	A	Fairchild	SL23300	Linear	3-1	CR
		Motorola	MC7812CT			
		Natl Semic	LM340T-12			
		∞Signetics	7812CU			
156-0285-01	A	Fairchild	µA7812UCQR	Linear	3-1	CR
		Motorola	MC7812CTD			
156-0285-02	A	Natl Semic	LM340T-12	Linear	3-1	CR
		Silicon Gen	SG7812ACP			
156-0286-00	U		TAA790			CS
156-0287-00	U		709C	Op Amp		CS
156-0288-00	U		1123	Linear		CS
156-0289-00	A	Natl Semic	CD4016CJ	Spec Funct	2-3	CR
		RCA	CD4016AY			
156-0289-01	A		4016	Spec Funct	2-3	CR
156-0289-02	A	Natl Semic	MM4016CJ/A+	Spec Funct	2-3	CR
		RCA	CD4016BFX			
156-0290-00	X		U6A902259X	TTL		OB
156-0291-00	N	∞AMD	2102	Mem Sel Guide	1-6	CR
		Fairchild	2102FDC/PC			
		∞Intel	2102			
		∞Intersil	IM7552CDE			
		Natl Semic	2102AN			
		∞Signetics	2102N			
156-0291-01	N	AMD	2102	Mem Sel Guide	1-6	CR
		Fairchild	2102/FDC/PC			
		Intel	2102			
		Intersil	IM7552CDE			
		Natl Semic	MM2102AN			
		Signetics	2102N			

PART NUMBER	** ND	VENDOR	VENDOR NO.	TYPE	* PAGE NO.	§§ ST
156-0292-00	N	∞Kierulff	46307-001	TTL		CR
		Natl Semic	DM74L02N/J			
		Texas Instr	SN74L04N/J			
156-0292-01	N		74L04	TTL		CR
156-0293-00	U	Elec Arrays	EA4000	MOS		DL
156-0293-01	U		EA4000	MOS		DL
156-0293-03	U		EA4000	MOS		NP
156-0294-00	U	Elec Arrays	EA4000	MOS		DL
156-0294-01	U		EA4000	MOS		DL
156-0294-02	U		EA2000	MOS		LR
156-0294-03	U		EA4000	MOS		NP
156-0295-00	A	Motorola	MC10107	ECL	1-11	CR
		∞NEC America	NPB10107D			
156-0295-01	X		10107	ECL		CR
156-0295-02	A	Motorola	MC10107P1	ECL	1-11	CR
156-0296-00	X	Elec Arrays	EA42267A-SG	Mem Sel Guide		LS
156-0296-01	X		EA4001			NP
156-0297-00	N	Fairchild	7421PC	TTL	1-18	CR
		Signetics	N7421N			
156-0297-01	N		7421	TTL	1-18	CR
156-0297-02	N	Fairchild	7421PCQR/DCQR	TTL	1-18	CR
		Signetics	N7421NB/FB			
156-0298-00	N	Signetics	N8T20N/F	TTL		CR
156-0298-01	X		N8T20B	TTL		NP
156-0299-00	N	Fairchild	74150PC	TTL	1-15	CR
		ITT Semic	ITT74150N			
		Natl Semic	DM74150N			
		Signetics	N74150N			
		Texas Instr	SN74150N			
156-0299-01	N		74150	TTL	1-15	CR
156-0299-02	N	Fairchild	74150PCQR/DCQR	TTL	1-15	CR
		Natl Semic	DM74150NA+/JA+			
		Signetics	N74150NB/FB			
		Texas Instr	SN74150NP3/JP4			
156-0300-00	X	Signetics	2513N/CM3441	MOS		DL
156-0301-00	X	Fairchild	74166PC	TTL		NP
		Natl Semic	DM74166N			
		Signetics	N74166N			
		Texas Instr	SN74166N			
156-0301-00	X		74166	TTL		NP
156-0301-02	N	Fairchild	74166PC/DC	TTL	1-20	CR
		Natl Semic	DM74166NA+/JA+			
		Signetics	N74166NB/FB			
		Texas Instr	SN74166NP3/JP4			
156-0302-00	A	Fairchild	75452BTC	TTL	1-17	CR
		Natl Semic	DS75452N/J			
		Texas Instr	SN75452BP			
156-0302-01	X		75452	TTL		CR
156-0302-02	A	Fairchild	75452PCQR/DCQR	TTL	1-17	CR
		Natl Semic	DS75452NA+/JA+			
		Texas Instr	SN75452NP3/JP4			
156-0303-00	X	Fairchild	74S03PC	TTL		NP
		Natl Semic	DM74S3N			
		Signetics	N74S03A			
		Texas Instr	SN74S03N			
156-0303-01	A	Fairchild	74S03PCQR/DCQR	TTL	1-18	CR
		Natl Semic	DM74S03NA+/JA+			
		Signetics	N74S03NB/FB			
		Texas Instr	SN74S03NP3/JP4			
156-0304-00	X	Fairchild	74S20PC	TTL		NP
		Natl Semic	DM74S20N			
		Signetics	N74S20N			
		Texas Instr	SN74S20N			
156-0304-01	X		74S20	TTL		NP
156-0304-02	A	Fairchild	74S20DCQR/PCQR	TTL	1-18	CR
		Natl Semic	DM74S20NA+/JA+			
		Signetics	N74S20NB/FB			
		Texas Instr	SN74S20NP3/JP4			
156-0305-00	A	AMD	AM27S18CD	Mem Sel Guide	1-7	CR

** NEW DESIGN RECOMMENDATION FROM COMPONENT ENGINEERING:

A = Acceptable
N = Not Recommended
U = Undefined
X = Do Not Use

INTEGRATED CIRCUIT PART NUMBER INDEX (CONT)

TEK PART NUMBER TO VENDOR NUMBER

PART NUMBER	ND**	VENDOR	VENDOR NO.	TYPE	PAGE NO.*	ST§§
156-0305-01	U		27LS08			CM
156-0305-02						NP
156-0305-03						CS
156-0306-00	A	Fairchild	3814DC	MOS	1-13	LR
156-0307-00	A	Motorola	MC1692L	ECL	1-12	CR
		Plessey	SP1692DG			
156-0307-01	A	Motorola	MC1692L1	ECL	1-12	CR
		Plessey	1692DG			
156-0308-00	A	Motorola	MC10115P/L	ECL	1-12	CR
		Signetics	10115			
156-0308-01	X		10115	ECL		CR
156-0308-02	A	Motorola	MC10115L	ECL	1-12	CR
		Plessey	SP10115E			
		Signetics	10115FJ			
156-0308-03	A	Motorola	SC22689P115	ECL	1-12	CR
		Signetics	10115FB			
156-0308-04	A	Motorola	MC10115P1	ECL	1-12	CR
		Signetics	10115N			
156-0309-00	N	AMD	93L00PC	TTL		EN
		Fairchild	F93L00PC			
156-0310-00	N	∞AMD	93L28PC	TTL	1-20	CR
		Fairchild	F93L28PC			
156-0310-01	N		U7/B93L2859X	TTL		CR
156-0310-02	N		93L28	TTL	1-20	MP
156-0311-00	X	Fairchild	7497PC/DC	TTL		NP
		Texas Instr	SN7497N			
156-0311-01	X		7497	TTL		NP
156-0311-02	N	Fairchild	7497DCQR	TTL	1-15	CR
		Texas Instr	SN7497JP4			
156-0312-00	A	∞Fairchild	μA7815UC	Linear	3-1	CR
		Motorola	MC7815CT			
		Natl Semic	LM40T-15			
		Silicon Gen	SG7815CP			
156-0312-01	X		μA7815UC	Linear		DL
156-0313-00	A	Natl Semic	DS75454N/J	TTL	1-17	CR
		Texas Instr	SN75454P/JG			
156-0313-01	X		75454	TTL		CR
156-0313-02	A	Natl Semic	DM75454NA+/JA+	TTL	1-17	CR
		Texas Instr	SN75454PP3/JP4			
156-0314-00	N	Fairchild	93L21PC/DC	TTL		CR
156-0315-00	N	Natl Semic	DM/SN74184	TTL	1-14	CR
		Texas Instr	SN74184N			
156-0315-01	N		74184	TTL	1-14	CS
156-0315-02	N	Natl Semic	DM74185NA+/JA+	TTL	1-14	CR
		Texas Instr	SN74184NP3/JP4			
156-0316-00	A	Motorola	MC10125P	ECL	1-11	CR
156-0316-01	A		10125	ECL		CR
156-0316-02	A	Motorola	MC10125L	ECL	1-11	CR
		Signetics	10125FJ			
156-0316-03	A	Motorola	SC22689P125	ECL	1-11	CR
		Signetics	10125FB			
156-0316-04	A	Motorola	SC22689L125	ECL	1-11	CR
156-0317-00	A	Analog Devc	AD40060	Op Amp	3-3	CR
		Harris	HA2-2625-5			
156-0317-01	A		HA2625	Op Amp		CR
156-0317-02	A	Harris	HA2-2625B0796	Op Amp	3-3	CS
156-0317-03	A		HA2625	Op Amp	3-3	CR
156-0318-00	N	Fairchild	74H87DC	TTL		CR
		∞Motorola	MC74H87P			
		Texas Instr	SN74H87N/J			
156-0318-01	X		74H87	TTL		CM
156-0320-00	X	Fairchild	74S11PC	TTL		NP
		Natl Semic	DM74S11N			
		Signetics	N74S11N			
		Texas Instr	SN74S11N			
156-0320-01	X		74S11	TTL		NP
156-0320-02	X	Texas Instr	SN91340N/J	TTL		CR
156-0320-03	A	Fairchild	74S11PCQR/DCQR	TTL	1-18	CR
		Signetics	N74S11NB/FB			
		Texas Instr	SN74S11NP3/JP4			
156-0321-00	X	Fairchild	74S10PC	TTL		NP
		Natl Semic	DM74S10N			
		Signetics	N74S10A			
		Texas Instr	SN74S10N			
156-0321-01	X		74S10	TTL		NP
156-0321-02	A	Fairchild	N74S10PCQR/DCQR	TTL	1-18	CR
		Natl Semic	DM74S10NA+/JA+			
		Signetics	74S10NB/FB			
		Texas Instr	SN74S10NP3/JP4			
156-0322-00	X	Signetics	N82S41N	TTL		DL
156-0323-00	X	Fairchild	74S04PC	TTL		NP
		Natl Semic	DM74S04N			
		Signetics	N74S04N			
		Texas Instr	SN74S04N			
156-0323-01	X		74S04	TTL		NP
156-0323-02	A	Fairchild	74S04PCQR/DCQR	TTL	1-14	CR
		Natl Semic	DM74S04NA+/JA+			
		Signetics	N74S04NB/FB			
		Texas Instr	SN74S04NP3/JP4			
156-0323-03	X		74S04	TTL		DL
156-0324-00	X	AMD	SN74S151N	TTL		NP
		Fairchild	74S151PC			
		Natl Semic	DM74S151N			
		Signetics	N74S151B			
		Texas Instr	SN74S151N			
156-0324-01	X		74S151	TTL		NP
156-0324-02	X	Texas Instr	SN84980N	TTL		CR
156-0324-03	A	AMD	SN74S151NB/JB			CR
		Fairchild	N74S151DCQR/PCQR			
		Natl Semic	DM74S151NA+/JA+			
		Signetics	N74S151NB/FB			
		Texas Instr	SN74S151NP3/JP4			
156-0325-00	X	AMD	SN74S153N/J	TTL		NP
		Fairchild	74S153PC/DC			
		Natl Semic	DM74S153N/J			
		Signetics	N74S153N/J			
		Texas Instr	SN74S153N/J			
156-0325-01	X		S74S153N	TTL		NP
156-0325-02	A	AMD	SN74S153JB	TTL	1-15	CR
		Fairchild	74S153DCQR			
		Signetics	N74S153FB			
		Texas Instr	SN74S153JP3			
156-0326-00	X	AMD	SN74S195N/J	TTL		NP
		∞Fairchild	74S195PC/DC			
		∞Natl Semic	DM74S195N/J			
		Signetics	N74S195N/F			
		Texas Instr	SN74S195N/J			
156-0326-01	X		74S195	TTL		NP
156-0326-02	A	AMD	SN74S195NB/JB	TTL	1-20	CR
		∞Natl Semic	DM74S195NA+			
		Signetics	N74S195NB/FB			
		Texas Instr	SN74S195NP3/JP4			
156-0326-03	X	AMD	SN74S195JB	TTL		CR
		Natl Semic	DM74S195JA+			
		Texas Instr	SN74S195JP4			
156-0327-00	N	∞AMD	93L14DC	TTL		CR
		Fairchild	93L14DC			
156-0327-01	N		93L14	TTL		CR
156-0328-00	A	Natl Semic	MH0026CN	MOS	1-13	CR
156-0328-01	X	Natl Semic	DS0026CN	MOS		LD
156-0329-00	A	AMD	AM2802PC	MOS	1-13	PP
156-0330-00	X	∞Harris	HD1-4CS0-9	CMOS		NP
		Motorola	MC14050BCL			
		RCA	CD4050BF			
156-0330-01	X		4050	CMOS		NP
156-0330-02	A	Motorola	MC14050BCLD	CMOS	1-9	CR
		RCA	CD4050BFX			
156-0331-00	X	Fairchild	74S74PC/DC	TTL		NP
		Natl Semic	DM74S74N/J			
		∞Signetics	N74S74N/F			
		Texas Instr	SN74S74N/J			
156-0331-01	X		74S74	TTL		NP

*LACK OF ENTRY IN COLUMN INDICATES ITEM IS NOT LISTED IN MFR/TEK SECTION OF CATALOG. THIS INDICATES ITEM IS OBSOLETE, NOT RECOMMENDED FOR NEW DESIGN, OR OF LIMITED USE (SUCH AS SPECIALIZED CUSTOM MASK)

∞ NOT CURRENT VENDOR.

§§ FOR STATUS CODES, SEE PAGE 4-39.

INTEGRATED CIRCUIT PART NUMBER INDEX (CONT)

TEK PART NUMBER TO VENDOR NUMBER

PART NUMBER	** ND	VENDOR	VENDOR NO.	TYPE	* PAGE NO.	§§ ST
156-0331-02	X	Fairchild	9S74DC/74S74DC	TTL		CR
		Texas Instr	SN38624J			
156-0331-03	A	Texas Instr	SN74S74NP3	TTL	1-17	CR
156-0332-00	X	Motorola	MC1011P	ECL		LR
156-0333-00	X	Plessey	SP1650C	Spec Funct		LS
156-0333-01	X	Motorola	MC1650L	Spec Funct		DL
		Plessey	SP1650DG			
156-0334-00	X	Motorola	MC1666L	ECL		DL
156-0335-00	N	Natl Semic	LH0042CH	Op Amp		CR
156-0335-01	N		LH0042CH	Op Amp		CR
156-0336-00	N	Signetics	N8234N/F	TTL	1-15	CR
156-0336-01	N	Signetics	N8234NB/FB	TTL	1-15	CR
156-0336-02	N		8234	TTL	1-15	
156-0337-00	X	Mono Mem	MM6055	TTL		DL
156-0338-00	X	Natl Semic	DS0025CN	MOS		CS
156-0339-00	N	Natl Semic	DM8599N	Mem Sel Guide	1-5	CR
156-0339-01	N		8599			CR
156-0339-02		Natl Semic	8599			CR
156-0340-00	N	∞Signetics	N74190N/J	TTL	1-15	CS
		Texas Instr	SN74190N/J			
156-0340-01	N		74190	TTL	1-15	CS
156-0340-02	N	Texas Instr	SN74190NP3/JP4	TTL	1-15	CR
156-0341-00	X	Fairchild	75453BTC	TTL		NP
		Natl Semic	LM75453N/J			
		Texas Instr	SN75453BP/BJG			
156-0341-01	X		75454	TTL		NP
156-0341-02	A	Natl Semic	LM75453NA+/JA+	TTL	1-17	CR
		Texas Instr	SN75453PP3/JGP4			
156-0342-00	A	Dionics	DI-297N	Spec Funct		LS
156-0343-00	A	Motorola	MC1668L	ECL	1-12	CR
		Plessey	SP1668DG			
156-0344-00	X	Motorola	MC1043P	ECL		LR
156-0345-00	N	∞Natl Semic	DM74185AN	TTL	1-14	CR
		Texas Instr	SN74185AN			
156-0345-01	N		74185	TTL	1-14	CR
156-0345-02	N	Natl Semic	DM74185NA+/JA+	TTL	1-14	CR
		Texas Instr	SN74185NP3/JP4			
156-0346-00	X	Intel	1602A	Mem Sel Guide		LR
156-0347-00	X	Texas Instr	SN74147N/J	TTL		NP
156-0347-01	X		74147	TTL		NP
156-0347-02	N	Natl Semic	DM74147NA+/JA+	TTL	1-17	CR
		Texas Instr	SN7414NP3/JP3			
156-0348-00	A	Motorola	MC1663L	ECL	1-11	OT
		Plessey	SP1663DG			
156-0349-00	N	Motorola	MC14001UBCL	CMOS	1-9	CR
		Natl Semic	CD4001CJ			
156-0349-01	N	Fairchild	34001BDC	CMOS	1-9	CR
156-0349-02	X		4001A	CMOS		CR
156-0349-03	N	Motorola	MC14001UBCLD	CMOS	1-9	CR
		RCA	CD4001UBFX			
156-0349-04	N		4001B	CMOS		CS
156-0349-05	X	Motorola	MC14001BCL	CMOS		NP
		Natl SEmic	CD4001BCJ			
		RCA	CD4001BF			
156-0349-06	A	Motorola	MC14001BCLD	CMOS	1-9	CR
		Natl Semic	CD4001BCJ/A+			
		RCA	CD4001BFX			
156-0350-00	N	Mitel Semic	SIL4011UBF	CMOS	1-9	CR
		Motorola	MC14011UBCL			
		RCA	CD4011UBF			
156-0350-01	N	Fairchild	4011BDC	CMOS	1-9	CR
156-0350-02	N	Motorola	MC14011UBCLD	CMOS	1-9	CR
		RCA	CD4011BFX			
156-0350-03	N	Fairchild	4011BDCQR	CMOS		CS
156-0350-04	X	Motorola	MC14011BCL	CMOS		NP
		Natl Semic	CD4011BCJ			
		RCA	CD4011BF			
156-0350-05	A	Motorola	MC14011BCLD	CMOS	1-9	CR
		Natl Semic	CD4011BCJA+			
		RCA	CD4011BFX			
156-0350-06	X	Motorola	MC14011BCLD	CMOS		DL
		RCA	CD4011BFX			
156-0351-00	X	Fairchild	9341PC/DC	TTL		NP
		Natl Semic	DM74181N/J			
		∞Signetics	N74181N			
		Texas Instr	SN74181N/J			
156-0351-01	N	Fairchild	74181PCQR/DCQR	TTL	1-14	
		Natl Semic	DM74181N/A+			
		Texas Instr	SN74181NP3			
156-0352-00	N	RCA	CD4007AE	CMOS		CR
156-0353-00	A	Motorola	MC1672L	ECL	1-11	CR
		Plessey	SP1672B			
156-0353-01	X	Motorola	MC1672L1	ECL		DL
		Plessey				
156-0354-00	U	Natl Semic	MM5213NZF/N	MOS		LS
156-0355-00	A	RCA	CA3081	Array	3-2	CR
156-0356-00	A	RCA	85S72	Op Amp	3-5	CR
156-0356-01	A	RCA	CA3080TX	Op Amp	3-5	CR
156-0357-00	U	Signetics	N8205N	TTL		DL
156-0357-02		Signetics	N82S115F/CB9403F			CS
156-0358-00	U	Signetics	N8205N	TTL		NP
156-0358-02		Signetics	N82S115F/CB9402F			CS
156-0359-00	U	Signetics	N8205N	TTL		NP
156-0359-02		Signetics	N82S115F/CB9401F			CS
156-0360-00	U	Signetics	N8205N	TTL		PP
156-0360-02		Signetics	N82S115F/CB9400F			CS
156-0361-00	X	Gen Instr	AY-5-1013A	Multi Funct		LR
156-0361-01	X	Gen Instr	AY-5-1013	Multi Funct		NP
156-0361-02	X	Gen Instr	AY-5-1013	Multi Funct		NP
156-0361-03	U		AY-3-1015D	Multi Funct	1-2	MP
156-0362-00	A	AMD	AM685HL	Spec Funct	2-3	CR
156-0362-01	A	AMD	AM685HL-B	Spec Funct	2-3	CR
156-0363-00	X	Fairchild	SL30738	Mem Sel Guide		NP
156-0363-01		Fairchild	SL30738			CS
156-0364-00	U	Signetics	2530N/CM5711	MOS		LS
156-0365-00	X	Fairchild	7445PC/9345PC	TTL		DL
		Natl Semic	DM7445N			
		Texas Instr	SN7445N			
156-0366-00	X	Harris	HD1-4013B-9	CMOS		NP
		Motorola	MC14013BCL			
		RCA	CD4013BF			
156-0366-01	X		4013	CMOS		NP
156-0366-02	N	Motorola	MC14013BCLD	CMOS		CR
		RCA	CD4013BFX			
156-0366-03	A	Motorola	MC14013BCLD	CMOS	1-9	DL
		RCA	CD4013BFX			
156-0367-00	N	Fairchild	74195PC/DC	TTL	1-20	CS
		Natl Semic	DM74195N/J			
		Signetics	N74195N/F			
		Texas Instr	SN74195N/J			
156-0367-01	N		74195	TTL	1-20	CS
156-0367-02	N	Fairchild	74195PCQR/DCQR	TTL	1-20	CR
		Natl Semic	DM74195NA+/JA+			
		Signetics	N74195NB/FB			
		Texas Instr	SN74195NP3/JP4			
156-0368-00	A	Motorola	MC10124L	ECL	1-11	CR
156-0368-01	A	Motorola	SC22689L124	ECL	1-11	CR
156-0368-02	A	Motorola	SC22689L124	ECL	1-11	CR
156-0368-03	A	Motorola	SC22689L124	ECL	1-11	CR
156-0368-04						SC
156-0369-00	A	Motorola	MC10216P/L	ECL	1-12	CR
		Signetics	10216A			
156-0369-01	A	Motorola	MC10216L	ECL	1-12	CR
156-0369-02	A	Motorola	SC22689P216	ECL	1-12	CR
156-0369-03	A	∞Fairchild	F10216DC	ECL	1-12	CR
		Motorola	SC22689P216			
		Signetics	10216NB/FB			
156-0370-00	X	Burr-Brown	3041B	Op Amp		CR
156-0371-00	X	Fairchild	74132PC/DC	TTL		NP
		Natl Semic	DM74132N/J			
		Signetics	N74132N/J			
		Texas Instr	SN74132N/J			
156-0371-01	X		74132	TTL		NP
156-0371-02	N	Fairchild	74132PCQR/DCQR	TTL	1-18	CR
		Natl Semic	74132NA/JA+			
		Signetics	N74132NB/FB			
		Texas Instr	SN74132NP3/JP4			

**NEW DESIGN RECOMMENDATION FROM COMPONENT ENGINEERING:

A = Acceptable
N = Not Recommended
U = Undefined
X = Do Not Use

INTEGRATED CIRCUIT PART NUMBER INDEX (CONT)

TEK PART NUMBER TO VENDOR NUMBER

PART NUMBER	** ND	VENDOR	VENDOR NO.	TYPE	* PAGE NO.	§§ ST
156-0372-00	N	Motorola	MC4022P	TTL		CR
156-0373-00	N	Fairchild	74298PC/DC	TTL	1-15	CR
		Signetics	N74298N/J			
		Texas Instr	SN74298N/J			
156-0373-01	N		74298	TTL	1-15	CR
156-0373-02	N	Fairchild	74298PCQR/DCQR	TTL	1-15	CR
		Signetics	N74298NB/FB			
		Texas Instr	SN74298NP3/JP4			
156-0374-00	N	∞Natl Semic	DM7428N	TTL		NP
		Signetics	N7428A			
		Texas Instr	SN7428N			
156-0374-01	X		7428	TTL		NP
156-0374-02	N	Signetics	N7428ANB/FB	TTL	1-14	CR
		Texas Instr	SN7428NP3/JP4			
156-0375-00	X	Fairchild	9307PC	TTL		DL
156-0376-00	X	AMD	SN74LS195AN/AJ	TTL		NP
		Fairchild	74LS195APC/ADC			
		Natl Semic	DM74LS195AN/AJ			
		Signetics	74LS195AN/AF			
		Texas Instr	SN74LS195AN/AJ			
156-0376-01	A	∞AMD	SN74LS195NB2/JB2	TTL	1-20	CR
		Fairchild	74LS195APCQR/DCQR			
		Motorola	SN74LS195NDS/JDS			
		Signetics	N74LS195ANB/FB			
		Texas Instr	SN74LS195NP3/JP4			
156-0377-00	A	Fairchild	11C06DC	ECL	1-11	CR
		Motorola	SC22967L			
		∞Plessey	SP1690S			
156-0378-00	X	Signetics	2530N	MOS		DL
156-0378-01	U		2530N	MOS		NP
156-0378-02	U		2530N	MOS		NP
156-0378-03						LS
156-0379-00	N	Signetics	N8T06N/F	TTL	1-16 & 17	CR
156-0379-01	X		8T06N	TTL		DL
156-0379-02	A	Signetics	N8T06NB/FB	TTL	1-16 & 17	CR
156-0380-00	X	Hamilton-Av	B1702A	Mem Sel Guide		LR
		Intel	B1702A			
		Micro Sys	MIL1702A			
156-0381-00	X	Fairchild	74LS86PC/DC	TTL		NP
		Motorola	SN74LS86N/J			
		Natl Semic	DM74LS86N/J			
		Signetics	N74LS86N/F			
		Texas Instr	SN74LS86N/J			
156-0381-01	X		74LS86	TTL		NP
156-0381-02	A	Fairchild	74LS86PCQR/DCQR	TTL	1-18	CR
		Motorola	SN74LS86NDS/JDS			
		Natl Semic	DM74LS86NA+/JA+			
		Signetics	N74LS86NB/FB			
		Texas Instr	SN74LS86NP3/JP4			
156-0382-00	X	Fairchild	74LS00PC/DC	TTL		NP
		Motorola	SN74LS00N/J			
		Natl Semic	DM74LS00N/J			
		Signetics	N74LS00N/F			
		Texas Instr	SN74LS00N/J			
156-0382-01	X		74LS00	TTL		NP
156-0382-02	A	Fairchild	74LS00PCQR/DCQR	TTL	1-18	CR
		Motorola	SN74LS00NDS/JDS			
		Natl Semic	DM74LS00NA+/JA+			
		Signetics	N74LS00NB/FB			
		Texas Instr	SN74LS00NP3/JP4			
156-0383-00	X	Fairchild	74LS02PC/DC	TTL		NP
		∞Motorola	SN74LS02N/J			
		Natl Semic	DM74LS02N			
		Signetics	N74LS02N/F			
		Texas Instr	SN74LS02N/J			
156-0383-01	X		74LS02	TTL		NP
156-0383-02	A	Fairchild	74LS02PCQR/DCQR	TTL	1-18	CR
		Motorola	SN74LS02NDS/JDS			
		Signetics	N74LS02NB/FB			
		Texas Instr	SN74LS02NP3/JP4			
56-0384-00	N	Fairchild	74LS03PC/DC	TTL	1-18	CR
		Motorola	SN74LS03N/J			
		Natl Semic	DM74LS03N/J			
		∞Signetics	N74LS03N/F			
		Texas Instr	SN74LS03N/J			

PART NUMBER	** ND	VENDOR	VENDOR NO.	TYPE	* PAGE NO.	§§ ST
156-0384-01	X		74LS03	TTL		NP
156-0384-02	A	Fairchild	74LS03PCQR/DCQR	TTL	1-18	CR
		Motorola	SN74LS03NDS/JDS			
		Natl Semic	74LS03NA+/JA+			
		Texas Instr	SN74LS03NP3/JP4			
156-0385-00	X	Fairchild	74LS04PC/DC	TTL		NP
		Motorola	SN74LS04N/G			
		Natl Semic	DM74LS04N/J			
		Signetics	N74LS04N/F			
		Texas Instr	SN74LS04N/J			
156-0385-01	X		SN74LS04N	TTL		NP
156-0385-02	A	Fairchild	SL82115	TTL	1-14	CR
		Motorola	SN74LS04NDS/JDS			
		Natl Semic	DM74LS04NA+/JA+			
		Signetics	N74LS04NB/FB			
		Texas Instr	SN74LS04NP3/JP4			
156-0386-00	X	Fairchild	74LS10PC/DC	TTL		NP
		Natl Semic	DM74LS10N/J			
		Signetics	N74LS10N/F			
		Texas Instr	SN74LS10N/J			
156-0386-01	X		74LS10	TTL		NP
156-0386-02	A	Fairchild	74LS10PCQR/DCQR	TTL	1-18	CR
		Motorola	SN74LS10NDS/JDS			
		Natl Semic	DM74LS10NA+/JA+			
		Signetics	N74LS10NB/FB			
		Texas Instr	SN74LS10NP3/JP4			
156-0387-00	X	∞Fairchild	74LS73PC/DC	TTL		NP
		Natl Semic	DM74LS73N/J			
		Signetics	N74LS73N/F			
		Texas Instr	SN74LS73N/J			
156-0387-01	X		74LS73	TTL		NP
156-0387-02	A	Motorola	SN74LS73ANDS	TTL	1-17	CR
		Natl Semic	DM74LS73N/A+			
		Signetics	N74LS73NB/FB			
		Texas Instr	SN74LS73NP3			
156-0388-00	X	Fairchild	74LS74PC/DC	TTL		NP
		Motorola	SN74LS74N/J			
		Natl Semic	DM74LS74N/J			
		∞Signetics	N74LS74N			
		Texas Instr	SN74LS74N/J			
156-0388-01	X		74LS74	TTL		NP
156-0388-02	X		74LS74	TTL	1-17	NP
156-0388-03	A	Fairchild	74LS74APCQR/DCQR	TTL	1-17	CR
		Motorola	SN74LS74ANDS/JDS			
		Texas Instr	SN74LS74ANP3/JP4			
156-0388-04	N	Fairchild	74LS74D	TTL		CM
		Signetics	N74LS74F			
		Texas Instr	SN74LS74J			
156-0389-00	N	∞Fairchild	74LS95PC/DC	TTL	1-20	CR
		∞Natl Semic	DM74LS95N/J			
		Signetics	N74LS95N/F			
		Texas Instr	SN74LS95BN/J			
156-0389-01	N		74L95	TTL	1-20	CR
156-0389-02	A	Signetics	N74LS96NB/FB	TTL	1-20	CR
		Texas Instr	SN74LS95NP3/JP4			
156-0390-00	N	Fairchild	74LS155PC/DC	TTL	1-16	CR
		Natl Semic	DM74LS155N/J			
		Signetics	N74LS155N/F			
		Texas Instr	SN74LS155N/J			
156-0390-01	N		74LS155	TTL	1-16	CR
156-0390-02	A	Fairchild	74LS155PCQR/DCQR	TTL	1-16	CR
		∞Motorola	SN74LS155NDS/JDS			
		Natl Semic	DM74LS155NA+/JA+			
		Signetics	N74LS155NB/FB			
		Texas Instr	SN74LS155NP3/JP4			
156-0391-00	X	AMD	SN74LS174N/J	TTL		NP
		Fairchild	74LS174PC/DC			
		Motorola	74LS174N/J			
		Natl Semic	DM74LS174N/J			
		Signetics	N74LS174N/F			
		Texas Instr	SN74LS174N/J			

• LACK OF ENTRY IN COLUMN INDICATES ITEM IS NOT LISTED IN MFR/TEK SECTION OF CATALOG. THIS INDICATES ITEM IS OBSOLETE, NOT RECOMMENDED FOR NEW DESIGN, OR OF LIMITED USE (SUCH AS SPECIALIZED CUSTOM MASK).

∞ NOT CURRENT VENDOR

§§ FOR STATUS CODES, SEE PAGE 4-39.

INTEGRATED CIRCUIT PART NUMBER INDEX (CONT)

TEK PART NUMBER TO VENDOR NUMBER

PART NUMBER	** ND	VENDOR	VENDOR NO.	TYPE	* PAGE NO.	§§ ST
156-0391-01	X		74LS174	TTL		NP
156-0391-02	A	Motorola	SN74LS174NDS/JDS	TTL	1-17	CR
		Texas Instr	SN74LS174NP3/JP4			
156-0392-00	X	AMD	SN74LS175N/J	TTL		NP
		Fairchild	74LS175PC/DC			
		Natl Semic	DM74LS175N/J			
		Signetics	N74LS175N/F			
		Texas Instr	SN74LS175N/J			
156-0392-01	X	AMD	AM25LS175PC/DC	TTL		NP
		∞Raytheon	AM25LS175J/PC			
156-0392-02	X		74LS175	TTL		NP
156-0392-03	A	AMD	SN74LS175NB/JB	TTL	1-17	CR
		Fairchild	74LS175PCQR/DCQR			
		∞Motorola	SN74LS175NDS/JDS			
		Natl Semic	DM74LS175NA+/JA+			
		Signetics	N74LS175NB/FB			
		Texas Instr	SN74LS175NP3/JP4			
156-0393-00	X	MOS Tech	MTC 2517-3	MOS		LS
156-0394-00	X	MOS Tech	MCS 1020	Mem Sel Guide		LS
156-0395-00	N	Texas Instr	SN7490AN/J	TTL	1-15	CR
156-0395-01	N	Texas Instr	SN7490ANP3/JP3	TTL	1-15	CR
156-0396-00	X	Natl Semic	DM8094N/J	TTL		NP
		Signetics	N74126N/F			
156-0396-01	X		DM8094	TTL		NP
156-0396-02	N	Natl Semic	DM8094NA+/JA+	TTL	1-14	CR
156-0397-00	N	Natl Semic	DM8121N/J	TTL	1-15	CR
		Texas Instr	SN74251NJ			
156-0397-01	N		DM8121N	TTL	1-15	CR
156-0397-02	N	Natl Semic	DM74251NA+/JA+	TTL	1-15	CR
		Texas Instr	74251NP3/JP4			
156-0398-00	N	Natl Semic	DM8551N/J	TTL	1-20	CR
156-0398-01	N		8551	TTL		CR
156-0398-02		Natl	DM8551NA+/JA+			CR
156-0399-00	N	Natl Semic	DM8599N	Mem Sel Guide	1-5	CR
156-0399-02	N	Natl Semic	DM8599N	Mem Sel Guide	1-5	
156-0400-00	A	Motorola	MC1436CG	Op Amp	3-5	CR
156-0401-00	X	Gen Instr	RO-3-2513	MOS		CS
		∞Signetics	2513N/CM6330			
156-0401-01	U		2513	MOS		CS
156-0402-00	A	Natl Semic	LM555CN	Spec Funct	2-3	CR
		Silicon Gen	SG555CM/CY			
156-0402-01	A		NE555	Spec Funct	2-3	CR
156-0402-02	A	Natl Semic	LM555CN/A+	Spec Funct	2-3	CR
156-0402-03	A	Natl Semic	LM555CJ	Spec Funct	2-3	CR
156-0402-04						SC
156-0402-05						SC
156-0403-00	X	Fairchild	74S05PC/DC	TTL		NP
		Natl Semic	DM74S05N/J			
		Signetics	N74S05N/F			
		Texas Instr	SN74S05N/J			
156-0403-01	X		74S05	TTL		NP
156-0403-02	A	Fairchild	74S05PCQR/DCQR	TTL	1-14	CR
		Natl Semic	DM74S05NA+/JA+			
		Signetics	N74S05NB/FB			
		Texas Instr	SN74S05NP3/JP4			
156-0404-00	X	Fairchild	74S22PC/DC	TTL		NP
		Natl Semic	DM74S22N/J			
		Signetics	N74S22N/F			
		Texas Instr	SN74S22N/J			
156-0404-01	A	Texas Instr	SN74S22N/P3	TTL	1-18	CR
156-0405-00	X	Fairchild	9502PC/DC	TTL		NP
		∞Motorola	MC9602P/L			
		Natl Semic	DM9602N/J			
		Signetics	N9602N/F			
156-0405-01	X		9602	TTL		NP
156-0405-02	X		9602	TTL		NP
156-0405-03	N	Fairchild	9602PCQR/DCQR	TTL	1-19	CR
		∞Motorola	MC9602PDS/LDS			
		Natl Semic	DM9602NA+/JA+			
		Signetics	N9602NB/FB			
156-0406-00	N	Natl Semic	DM8090N/J	TTL		CR
156-0406-01						CR
156-0406-06						MP
156-0407-00	A	Motorola	MC1495L	Linear	3-1	CR
156-0407-01	N		1495L	Linear	3-1	CR
156-0407-02	N	Motorola	MC1495LDS	Linear	3-1	CR
156-0408-00	X	Mostek	MK5002P	MOS		DL
156-0409-00	A	Mostek	MK5007P	MOS	1-13	CR
156-0410-00	A	Mostek	MK5009P	MOS	1-13	CR
156-0410-01	X		MK5009	MOS		DL
156-0411-00	A	Natl Semic	LM339N	Spec Funct	2-3	CR
		NEC America	μPC339C			
		∞RCA	CA339G			
156-0411-01	A		339N	Spec Funct	2-3	CR
156-0411-02	A	Motorola	LM339JDS	Spec Funct	2-3	CR
		Silicon Gen	SG10203/339J			
		∞Texas Instr	LM339J			
156-0412-00	X	∞AMD	SN74LS193N	TTL		NP
		Fairchild	74LS193PC/DC			
		Natl Semic	DM74LS193N/J			
		Signetics	N74LS193N/F			
		Texas Instr	SN74LS193N/J			
156-0412-01	X		74LS193	TTL		NP
156-0412-02	A	Fairchild	74LS193DCQR/PCQR	TTL	1-15	CR
		Motorola	SN74LS193NDS/JDS			
		Natl Semic	DM74LS193NA+/JA+			
		Signetics	N74LS193NB/FB			
		Texas Instr	SN74LS193NP3/JP4			
156-0413-00	X	∞Fairchild	74S132PC/DC	TTL		NP
		∞Signetics	N74S132A			
		Texas Instr	SN74S132N/J			
156-0413-01	X		SN74S132N	TTL		NP
156-0413-02	A	Natl Semic	74S132DCQR/PCQR	TTL	1-18	
		Signetics	N74S132NB/FB			
		Texas Instr	SN74S132NP3/JP4			
156-0414-00	X	Harris	HI1-1800-5	CMOS		DL
156-0415-00	X	CPS, Inc.	411-12BIN-I	Spec Funct		NP
		Funct Mods	411-12-BIN-I			
		Hybrid Sys	DAC-411			
		Zeltex	Z50249			
156-0415-01	X		411-12-BIN-I	Linear		NP
156-0415-02						SC
156-0416-00	X	Signetics	N8243N	TTL		DL
156-0418-00	X	Fairchild	74S30PC/DC	TTL		NP
		Natl Semic	DM74S30N/J			
		Signetics	N74S30N/F			
		Texas Instr	SN74S30N/J			
156-0418-01	A	Fairchild	SL81936	TTL	1-18	CR
		Natl Semic	DM74S30NA+/JA+			
		Texas Instr	SN74S30NP3/JP4			
156-0419-00	X	Fairchild	74S140PC/DC	TTL		NP
		Natl Semic	DM74S140N/J			
		Signetics	N74S140N/F			
		Texas Instr	SN74S140N/J			
156-0419-01	X		SN74S140N	TTL		NP
156-0419-02	A	Fairchild	74S140PCQR/DCQR	TTL	1-16	CR
		Natl Semic	DM74S140NA+/JA+			
		Signetics	N74S140NB/FB			
		Texas Instr	SN74S140NP3/JP4			
156-0420-00	A	∞Hamilton-Av	LM321H	Op Amp	3-4	CR
		Natl Semic	LM321H			
156-0421-00	X	Fairchild	3341DC	MOS		EN
156-0422-00	X	∞AMD	SN74LS191N/J	TTL		NP
		Fairchild	74LS191PC/DC			
		Natl Semic	DM74LS191N/J			
		Signetics	N74LS191N/F			
		Texas Instr	SN74LS191N/J			
156-0422-01	X		74LS191	TTL		NP
156-0422-02	A	∞AMD	SN74LS191NB	TTL	1-15	CR
		Fairchild	74LS191PCQR/DCQR			
		∞Motorola	SN74LS191NDS/JDS			
		Signetics	N74LS191NB/FB			
		Texas Instr	SN74LS191NP3/JP4			
156-0423-00	X	Gen Instr	RO-3-2513			CR
		∞Signetics	2513N/CM8180			
156-0423-01	X		2513N			CR
156-0424-00	X	ITT	ITT7433N	TTL		NP
		Signetics	N7433A			
		Texas Instr	SN7433N			

** NEW DESIGN RECOMMENDATION FROM COMPONENT ENGINEERING:

A = Acceptable
N = Not Recommended
U = Undefined
X = Do Not Use

INTEGRATED CIRCUIT PART NUMBER INDEX (CONT)

TEK PART NUMBER TO VENDOR NUMBER

PART NUMBER	ND**	VENDOR	VENDOR NO.	TYPE	PAGE NO.*	ST§§
156-0424-01	N		7433	TTL		CR
156-0424-02	N	Signetics	N7433NB/FB	TTL	1-14	CR
		Texas Instr	SN7433NP3/JP4			
156-0425-00	U	Natl Semic	DM74S288ASX/N	TTL		CR
		∞Texas Instr	TBP18S030			
156-0426-00	N	Amer Micro	S6800E	Multi Funct	1-2	CR
		Fairchild	F6800DS			
		Motorola	MC6800S			
156-0426-01	N		6800	Multi Funct	1-2	CR
156-0426-02	X	AMI	6800	Multi Funct		DL
156-0426-03	X	Motorola	SC67013LK	Multi Funct		OT
156-0426-04	N	Amer Micro	S68B00	Multi Funct	1-2	CR
		Motorola	MC68B00L			
156-0426-05	N	Motorola	MC6800LD	Multi Funct	1-2	CR
156-0427-00	N	Amer Micro	S6820P/E	Multi Funct		CR
		Fairchild	6820PC/DC			
		Motorola	MC6820L/P			
		Synertek	SY6520P/D			
156-0427-01	X		6820	Multi Funct		CR
156-0427-02	X	AMI	6820	Multi Funct		DL
156-0427-03	A	Amer Micro	6821PIA	Multi Funct	1-2	CR
		Fairchild	F6821DC			
		Motorola	MC6821L			
		∞Synertek	6521/6821			
156-0427-04	A	Motorola	MC6821LD/PD	Multi Funct	1-2	CR
156-0428-00	X					DL
156-0429-00	X					DL
156-0430-00	X					DL
156-0431-00	X					DL
156-0432-00	X					DL
156-0433-00	X					DL
156-0434-00	X					DL
156-0435-00	X					DL
156-0436-00	X					DL
156-0437-00	X					DL
156-0438-00	X					DL
156-0439-00	X					DL
156-0440-00	X					DL
156-0441-00	X					DL
156-0442-00	X					DL
156-0443-00	X					DL
156-0444-00	X					DL
156-0445-00	X					DL
156-0446-00	X					DL
156-0447-00	X					DL
156-0448-00	X					DL
156-0449-00	X					DL
156-0450-00	X					DL
156-0451-00	X	Signetics	N74128N/F	TTL		NP
		Texas Instr	SN74128N/J			
156-0451-01	X		74128	TTL		NP
156-0451-02	N	Signetics	N74128NB/FB	TTL	1-14	CR
		Texas Instr	SN74128NP3/JP4			
156-0451-03	X		74128	TTL		DL
156-0452-00	X	∞Fairchild	74LS54PC	TTL		NP
		∞Natl Semic	DM74LS54N			
		∞Signetics	N74LS54N			
		Texas Instr	SN74LS54N/J			
156-0452-01	X		74LS54	TTL		NP
156-0452-02	A	Fairchild	74LS54PCQR/DCQR	TTL	1-18	CR
		Natl Semic	DM74LS54NA+/JA+			
		Texas Instr	SN74LS54NP3/JP4			
156-0453-00	X	AMD	5055N	MOS		DL
		Natl Semic	M5055N			
156-0453-01	X	AMD	AM2855	MOS		CR
		∞Natl Semic	MM5055N			
156-0453-02	X			MOS		NP
156-0453-03	X	AMD	AM2855PCB/DCB	MOS		CR
156-0454-00	N	Intel	8008	μP		CR
156-0454-01	N		IC8008	μP		NP
156-0455-00	X	Natl Semic	DS8837N	TTL		NP
156-0455-01	X		8837	TTL		NP
156-0455-02	N	Natl Semic	DM8837N/A+	TTL	1-17	CR
156-0456-00	N	Natl Semic	DS8836N	TTL	1-17	CR
		Signetics	N8T380A			
156-0456-01	N		8836	TTL	1-17	CR
156-0456-02	N	Natl Semic	DS8836NA+/JA+			CR
156-0457-00	X	Motorola	MC1035P	ECL		LS
156-0458-00	A	Motorola	MC10104L	ECL	1-11	CR
156-0458-01	A	Motorola	MC10104P1	ECL	1-11	CR
156-0459-00	X	Fairchild	74S08PC/DC	TTL		NP
		Signetics	N74S08N/F			
		Texas Instr	SN74S08N/J			
156-0459-01	X		74S08	TTL		NP
156-0459-02	A	Fairchild	74S08PCQR/DCQR	TTL	1-18	CR
		Signetics	N74S08NB/FB			
		Texas Instr	SN74S08NP3/JP4			
156-0460-00	N	Fairchild	7409PC/DC	TTL	1-18	CR
		Natl Semic	DM7409N/J			
		∞Signetics	N7409N			
		Texas Instr	SN7409N/J			
156-0460-01	N	Fairchild	7409PCQR/DCQR	TTL	1-18	CR
		Natl Semic	DM7409NA+/JA+			
		Texas Instr	SN7409NP3/JP4			
156-0461-00	A	Motorola	MC1594L	Linear		CS
156-0462-00	X	Fairchild	7414PC	TTL		NP
		Natl Semic	DM7414N			
		Signetics	N7414N			
		Texas Instr	SN7414N			
156-0462-01	X		7414	TTL		NP
156-0462-02	N	Fairchild	7414PCQR/DCQR	TTL	1-14	CR
		Natl Semic	DM7414NA+			
		Signetics	N7414NB/FB			
		Texas Instr	SN7414NP3/JP4			
156-0463-00	X	Natl Semic	MM5203Q	Mem Sel Guide		LR
156-0464-00	X	Fairchild	74LS20PC/DC	TTL		NP
		Motorola	74LS20N/J			
		Natl Semic	DM74LS20N/J			
		Signetics	N74LS20N/F			
		Texas Instr	SN74LS20N/J			
156-0464-01	X		74LS20	TTL		NP
156-0464-02	A	Fairchild	74LS20PCQR/DCQR	TTL	1-18	CR
		Motorola	SN74LS20NDS/JDS			
		Natl Semic	DM74LS20NA+/JA+			
		Signetics	N74LS20NB/FB			
		Texas Instr	SN74LS20NP3/JP4			
156-0465-00	X	Fairchild	74LS30PC/DC	TTL		NP
		Natl Semic	DM74LS30N/J			
		Signetics	N74LS30N/F			
		Texas Instr	SN74LS30N/J			
156-0465-01	X		74LS30	TTL		NP
156-0465-02	A	Fairchild	74LS30PCQR/DCQR	TTL	1-18	CR
		∞Motorola	SN74LS30NDS			
		Natl Semic	DM74LS30NA+/JA+			
		Signetics	N74LS30NB/FB			
		Texas Instr	SN74LS30NP3/JP4			
156-0466-00	N	Fairchild	74LS37PC/DC	TTL	1-14	CR
		Natl Semic	DM74LS37N/J			
		Signetics	N74LS37N/F			
		Texas Instr	SN74LS37N/J			
156-0466-01	N		74LS37	TTL	1-14	CR
156-0466-02	A	Fairchild	74LS37PCQR/DCQR	TTL	1-14	CR
		Natl Semic	DM74LS37NA+/JA+			
		Signetics	N74LS37NB/FB			
		Texas Instr	SN74LS37NP3/JP4			
156-0467-00	X	Fairchild	74LS38PC	TTL		NP
		Natl Semic	DM74LS38N			
		Signetics	N74LS38N			
		Texas Instr	SN74LS38N			
156-0467-01	X		74LS38	TTL		NP
156-0467-02	A	Fairchild	74LS38PCQR/DCQR	TTL	1-14	CR
		Motorola	AN74LS38NDS			
		Signetics	N74LS38NB/FB			
		Texas Instr	SN74LS38NP3/JP4			

* LACK OF ENTRY IN COLUMN INDICATES ITEM IS NOT LISTED IN MFR/TEK SECTION OF CATALOG. THIS INDICATES ITEM IS OBSOLETE, NOT RECOMMENDED FOR NEW DESIGN, OR OF LIMITED USE (SUCH AS SPECIALIZED CUSTOM MASK).

∞ NOT CURRENT VENDOR

§§ FOR STATUS CODES, SEE PAGE 4-39.

INTEGRATED CIRCUIT PART NUMBER INDEX (CONT)

TEK PART NUMBER TO VENDOR NUMBER

4

PART NUMBER	** ND	VENDOR	VENDOR NO.	TYPE	* PAGE NO.	§§ ST
156-0468-00	U	Texas Instr	SN74LS83N	TTL		DL
156-0468-01	U		74LS38	TTL		DL
156-0469-00	X	AMD	SN74LS138N	TTL		NP
		Fairchild	74LS138PC			
		Natl SEmic	DM74LS138N			
		Signetics	N74LS138N			
		Texas Instr	SN74LS138N			
156-0469-01	X		74LS138	TTL		NP
156-0469-02	A	∞AMD	SN74LS183NB2/JB2	TTL	1-16	CR
		Fairchild	74LS138PCQR/DCQR			
		Motorola	SN74LS138NDS/JDS			
		Signetics	N74LS183NB/FB			
		Texas Instr	SN74LS138NP3/JP4			
156-0470-00	X	∞AMD	SN74LS251N/J	TTL		NP
		Fairchild	74LS251PC/DC			
		Motorola	74LS251N/J			
		Natl Semic	DM74LS251N/J			
		∞Signetics	N74LS251N			
		Texas Instr	SN74LS251N/J			
156-0470-01	X		74LS251	TTL		NP
156-0470-02	A	∞AMD	SN74LS251NB2/JB2	TTL	1-15	CR
		Fairchild	74LS251PCQR/DCQR			
		Motorola	SN74LS251NDS/JDS			
		Texas Instr	SN74LS251NP3/JP4			
156-0471-00	X	AMD	SN74LS253N	TTL		NP
		Fairchild	74LS253PC			
		Natl Semic	DM74LS253N			
		Signetics	N74LS253N			
		Texas Instr	SN74LS253N			
156-0471-01	X		74LS253	TTL		NP
156-0471-02	A	AMD	SN74LS253NB2/JB2	TTL	1-15	CR
		Fairchild	74LS253PCQR/DCQR			
		Motorola	SN74LS253NDS/JDS			
		Natl Semic	DM74LS253NA+/JA+			
		Signetics	N74LS253NB/FB			
		Texas Instr	SN74LS253NP3/JP4			
156-0472-00	X	Fairchild	74S133PC	TTL		NP
		Natl Semic	DM74S133N			
		Signetics	N74S133N			
		Texas Instr	SN74S133N			
156-0472-01	X		74S133	TTL		NP
156-0472-03	A	Fairchild	74S133DCQR/PCQR	TTL	1-18	CR
		Natl Semic	DM74S133NA+/JA+			
		Signetics	N74S133NB/FB			
		Texas Instr	SN74S133NP3/JP4			
156-0473-00	X	Natl Semic	DM8092N	TTL		NP
156-0473-01	X		8092	TTL		NP
156-0473-02	N	Natl Semic	DM8092NA+/JA+	TTL		CR
156-0474-00	U	Amperex	ATF267			CR
156-0475-00	A	Natl Semic	LH0033CG	Op Amp	3-3	OT
156-0476-00	A	Siliconix	LD110CJ	Spec Funct	2-2	CR
156-0477-00	X	Siliconix	LD111CJ	Linear		LR
156-0478-00	X	Fairchild	74LS21PC	TTL		NP
		Natl Semic	DM74LS21N			
		Signetics	N74LS21N			
		Texas Instr	SN74LS21N			
156-0478-01	X		74LS21	TTL		NP
156-0478-02	A	Fairchild	74LS21PCQR/DCQR	TTL	1-18	CR
		Motorola	SN74LS21NDS/JDS			
		Natl SEmic	DM74LS21NA+/JA+			
		Signetics	N74LS21NB/FB			
		Texas Instr	SN74LS21NP3/JP4			
156-0479-00	X	Fairchild	74LS32PC/DC	TTL		NP
		Natl Semic	DM74LS32N/J			
		Signetics	N74LS32N/F			
		Texas Instr	SN74LS32N/J			
156-0479-01	X		74LS32	TTL		NP
156-0479-02	A	Fairchild	74LS32PCQR/DCQR	TTL	1-18	CR
		∞Motorola	SN74LS32NDS			
		Natl Semic	DM74LS32NA+/JA+			
		Signetics	N74LS32NB/FB			
		Texas Instr	SN74LS32NP3/JP4			
156-0479-03	N	Motorola	SN74LS32NDS	TTL		NP
		Texas Instr	SN74LS32NP3			
156-0479-04	N	Fairchild	74LS32DCQR	TTL	1-18	CR
		Motorola	SN74LS32NDS/JDS			
		Texas Instr	SN74ALS32NP3/JP4			

PART NUMBER	** ND	VENDOR	VENDOR NO.	TYPE	* PAGE NO.	§§ ST
156-0480-00	X	Fairchild	74LS08PC/DC	TTL		NP
		Motorola	SN74LS08N/J			
		Natl Semic	DM74LS08N/J			
		Signetics	N74LS08N/F			
		Texas Instr	SN74LS08N/J			
156-0480-01	X		74LS08	TTL		NP
156-0480-02	A	Fairchild	74LS08PCQR/DCQR	TTL	1-18	CR
		∞Motorola	SN74LS08NDS/JDS			
		Natl Semic	DM74LS08NA+/JA+			
		Signetics	N74LS08NB/FB			
		Texas Instr	SN74LS08NP3/JP4			
156-0481-00	X	Fairchild	74LS11PC/DC	TTL		NP
		Motorola	SN74LS11N/J			
		Natl Semic	DM74LS11N/J			
		Signetics	N74LS11N/F			
		Texas Instr	SN74LS11N/J			
156-0481-01	X		74LS11	TTL		NP
156-0481-02	A	Fairchild	74LS11PCQR/DCQR	TTL	1-18	CR
		Motorola	SN74LS11NDS/JDS			
		Natl Semic	DM74LS11NA+/JA+			
		Signetics	N74LS11NB/FB			
		Texas Instr	SN74LS11NP3/JP4			
156-0482-00	N	Natl Semic	DM74S196N/J	TTL	1-15	CR
		∞Signetics	N82S90N			
		∞Texas Instr	SN74S196N/J			
156-0482-01	A	Natl Semic	DM74S196NA+/JA+	TTL	1-15	CR
156-0483-00	N	AMD	AM26S12APC	TTL	1-16	CR
156-0483-01	N	AMD	AM26S12PCB/DCB			CR
156-0484-00	N	Natl Semic	LH0022CH	Op Amp		CR
156-0485-00	X	Signetics	2533N	MOS		LS
156-0485-01	X		2533V	MOS		NP
156-0486-00	U		MM6300N	TTL		DL
156-0487-00	N	AMD	AM96L02PC	TTL		CR
		Fairchild	96L02PC			
156-0487-01	N		96L02	TTL		CR
156-0487-02	N	∞AMD	SN96L02NB2	TTL		CR
		Fairchild	96L02PCQR/DCQR			
		∞Natl Semic	DM96L02NA+			
156-0488-00	N	∞AMD	93L22PC	TTL		CR
		Fairchild	93L22PC			
156-0488-01	N		93L22	TTL		CR
156-0489-00	U	Texas Instr	SN74L193N			DL
156-0490-00	N	Natl Semic	DM74L42AN	TTL		CR
156-0490-01	N		74L42	TTL		CR
156-0490-02	N	Natl Semic	DM86L42NA+/JA+			PP
156-0491-00	X	Motorola	MC2257L			LS
156-0491-01	X		MC2257L			DL
156-0492-00	X	Motorola	MC2259L	MOS		LS
156-0492-01	X		MC2259L	MOS		DL
156-0493-00	N	Fairchild	9368DC	TTL	1-16 & 17	CR
156-0493-01	X		9368PC	TTL		OT
156-0493-02	N	Motorola	MC14049UCBL	TTL	1-16 & 17	CR
		RCA	CD4049UBF			
156-0494-00	X	∞Fairchild	34049BCD	CMOS		NP
		∞Harris	HE1-40498B-9			
		Motorola	MC14049UBCL			
		RCA	CD4049UBF			
156-0494-01	X		4049	CMOS		NP
156-0494-02	A	Motorola	MC14049UBCLD	CMOS	1-9	CR
		RCA	CD4049UBFX			
156-0495-00	A	Natl Semic	LM324N	Op Amp	3-3	CR
		NEC America	UPC3246			
		RCA	CA324G			
		Texas Instr	LM324N			
156-0495-01	A		LS324N	Op Amp	3-3	CR
156-0495-02	A	∞Motorola	SC73198L	Op Amp	3-3	CR
		Natl Semic	LM324J/A+			
		Silicon Gen	SG9872/324J			
		Texas Instr	LM324J4			

** NEW DESIGN RECOMMENDATION FROM COMPONENT ENGINEERING:

A = Acceptable
N = Not Recommended
U = Undefined
X = Do Not Use

INTEGRATED CIRCUIT PART NUMBER INDEX (CONT)

TEK PART NUMBER TO VENDOR NUMBER

PART NUMBER	** ND	VENDOR	VENDOR NO.	TYPE	* PAGE NO.	§§ ST
156-0495-03	X		LM324	Op Amp		DL
156-0496-00	A	Raytheon	RC4194DC	Linear	3-1	CR
		Silicon Gen	SG4194CJ			
156-0496-01	A	Raytheon	RC4194DC	Linear	3-1	CR
156-0497-00	X	Signetics	N8273N	TTL		NP
156-0497-01	N		82738	TTL		NP
156-0497-02	N	Signetics	N8273NB/FB	TTL		CR
156-0498-00	N	Signetics	N8274N	TTL		CR
156-0498-01	X		8274B	TTL		DL
156-0499-00	X	Texas Instr	TMS4024NC	CMOS		LS
156-0499-01	X		TMS4024NC	CMOS		NP
156-0500-00	U	Monsanto	QC1313A	Linear		TC
156-0501-00	U	Motorola	MC7805CP			TC
156-0502-00	X	Motorola	MC14008BCL	CMOS		NP
		RCA	CD4008BF			
156-0502-01	X		4008	CMOS		NP
156-0502-02	A	Motorola	MC14008BCLD	CMOS	1-9	CR
		RCA	CD4008BFX			
156-0503-00	X	∞Natl Semic	CD4009CUBF	CMOS		NP
		RCA	CD4009UBF			
156-0503-01	X		4009	CMOS		NP
156-0503-02	N	Natl Semic	CD4009CJ/A+	CMOS	1-9	CR
		RCA	CD4009UBFX			
156-0504-00	N	Natl Semic	MM5610AJ	CMOS	1-9	CR
		RCA	CD4010BF			
156-0504-01	N		4010	CMOS	1-9	CR
156-0504-02	N	Natl Semic	CD4010JA+	CMOS	1-9	CR
		RCA	CD4010BFX			
156-0505-00	N	Motorola	MC14519BCL	CMOS	1-9	CR
156-0505-01	X		14519C	CMOS		NP
156-0505-02	A	Motorola	MC14519BCLD	CMOS	1-9	CR
156-0506-00	N	Natl Semic	DS8831N	TTL	1-17	CR
156-0507-00	N	Natl Semic	DM75491N	TTL		DL
156-0508-00	X	Fairchild	74279PC	TTL		NP
		Signetics	N74279N			
		Texas Instr	SN74279N			
156-0508-01	X		74279	TTL		NP
156-0508-02	N	Fairchild	74279PCQR/DCQR	TTL	1-19	CR
		Signetics	N74279NB/FB			
		Texas Instr	SN74279NP3/JP4			
156-0509-00	A	AMD	AM1408L8	Spec Funct	2-2	CR
		Motorola	MC1408L8			
		Prec. Mono	SSS1408A-021			
		Signetics	MC14088N			
156-0509-01	X		MC1408L-8	Linear		DL
156-0509-02	X		MC1408L	Linear		DL
156-0509-03	A	AMD	AM1408L8-B	Linear		CR
		Motorola	MC1408L8DS			
156-0510-00	X	Motorola	MC1317L	ECL		OT
156-0511-00	N	Raytheon	RC4531NB	Op Amp		CR
		Signetics	NE531N			
156-0511-01	N		NE531V	Op Amp		CR
156-0511-02	N	Signetics	NE531N-IIB	Op Amp		PP
156-0512-00	A	AMD	LM308N	Op Amp	3-4	CR
		∞Intersil	LM308N			
		Natl Semic	LM308N			
156-0512-01	A	∞Natl Semic	LM308N	Op Amp	3-4	CR
156-0512-02	A	Motorola	LM308J-8DS	Op Amp	3-4	CR
		Natl Semic	LM308J-8/A+			
		Silicon Gen	SG9427/308Y			
156-0512-03	A	Motorola	LM308J-8	Op Amp	3-4	CR
		Natl Semic	LM308J-8			
		Silicon Gen	SG308Y			
156-0513-00	A	Fairchild	34051BD	Spec Funct	2-3	CR
		∞Harris Semic	HD1-4051B			
		∞Natl Semic	34051BD			
		Motorola	MC14051BCL			
156-0513-01	X		4051	Spec Funct		NP
156-0513-02	A	Motorola	MC14051BCLD	Spec Funct	2-3	CR
		Natl Semic	CD4051CJ/A+			
		RCA	CD4051BFX			
156-0514-00	A	Fairchild	34052BD	Spec Funct	2-3	CR
		Motorola	MC14052BCL			
		RCA	CD4052BF			
156-0514-01	A	Motorola	MC14052BLD	Spec Funct	2-3	CR
		RCA	CD4052BFX			
156-0514-02	A	Fairchild	4052BDC	Spec Funct		CR
156-0514-03						SC
156-0515-00	A	Motorola	MC14053BCL	Spec Funct	2-3	CR
		RCA				
156-0515-01	X	Motorola	MC14053BCLD	Spec Funct	2-3	NP
156-0515-02	A	Motorola	MC14053BCLD	Spec Funct	2-3	CR
		RCA	CD4053BFX			
156-0515-03	A	Motorola	MC14052BCL	Spec Funct	2-3	CR
		RCA	CD4053BF			
156-0515-04	A		4053B	Spec Funct		PP
156-0516-00	N	Analog Dev	AD523J	Op Amp		CR
156-0517-00	A	Texas Instr	TL442CN	Linear	3-1	CR
156-0517-01	N		TL442CN	Linear	3-1	CR
156-0518-00	A	Motorola	MC12040L	Spec Funct	1-12 & 2-3	CR
156-0519-00	X	Motorola	MC14018BCL	CMOS		NP
		RCA	CD4018BF			
156-0519-01	A	Motorola	MC14018BCLDS	CMOS	1-9	CR
		RCA	CD4018BFX			
156-0520-00	A	Motorola	MC10133P	ECL	1-12	CR
156-0520-01	A	Motorola	MC10133P1	ECL	1-12	CR
156-0520-02						SC
156-0521-00	N	AMC	AM9308PC	TTL		CR
		Fairchild	9308PC			
		Texas Instr	SN74116N			
156-0521-01	N		9308	TTL		CR
156-0521-02	N	Fairchild	74116PC/DCQR	TTL		PP
		Texas Instr	SN74116NP3/JP4			
156-0522-00	X	AMD	SN74S257N	TTL		NP
		Fairchild	74S257PC			
		Natl Semic	DM74S257N			
		Signetics	N74S257B			
		Texas Instr	SN74S257N			
156-0522-01	X		74S257	TTL		NP
156-0522-02	A	AMD	SN74S257NB/JB	TTL	1-15	CR
		Fairchild	74S257DCQR/PCQR			
		∞Natl Semic	DM74S257NA+/JA+			
		Signetics	N74S257NB/FB			
		Texas Instr	SN74S257NP3/JP4			
156-0523-00	X	Fairchild	34024BDC	CMOS		NP
		∞Mitel Semic	4024BF			
		Motorola	MC14024BCL			
156-0523-01	A	Fairchild	4024BDC	CMOS	1-9	CR
		Motorola	MC14024BCLD			
		RCA	CD4024BFX			
156-0524-00	X	Motorola	MC14023BCL	CMOS	1-9	NP
		RCA	CD4023BF			
156-0524-01	X		4023	CMOS		NP
156-0524-02	A	Motorola	MC14023BCLDS	CMOS	1-9	CR
		RCA	CD4023BFX			
156-0525-00	X	Fairchild	4027DC	CMOS		NP
		Motorola	MC14027B			
156-0525-01	X		4027	CMOS		NP
156-0525-02	N	Fairchild	4027DC	CMOS		CS
156-0525-03	A	Motorola	MC14027BCLD	CMOS	1-9	CR
156-0526-00	A	AMD	SN74LS192N	TTL	1-15	CR
		Fairchild	74LS192PC			
		Natl Semic	DM74LS192N			
		Signetics	N74LS192B			
		Texas Instr	SN74LS192N			
156-0526-01	N		74LS192	TTL	1-15	CR
156-0526-02	A	AMD	SN74LS192PCB/DCB	TTL	1-15	CR
		Fairchild	74LS192PCQR/DCQR			
		Natl Semic	DM74LS192NA+/JA+			
		Signetics	N74LS192NB/FB			
		Texas Instr	SN74LS192NP3/JP4			

§§ FOR STATUS CODES, SEE PAGE 4-39.

* LACK OF ENTRY IN COLUMN INDICATES ITEM IS NOT LISTED IN MFR/TEK SECTION OF CATALOG. THIS INDICATES ITEM IS OBSOLETE, NOT RECOMMENDED FOR NEW DESIGN, OR OF LIMITED USE (SUCH AS SPECIALIZED CUSTOM MASK).

∞ NOT CURRENT VENDOR

INTEGRATED CIRCUIT PART NUMBER INDEX (CONT)

TEK PART NUMBER TO VENDOR NUMBER

PART NUMBER	** ND	VENDOR	VENDOR NO.	TYPE	* PAGE NO.	§§ ST
156-0527-00	A	∞Hamilton-Av	MC7915CT	Linear	3-1	CR
		Motorola	MC7915CT			
		Silicon Gen	SG7915CP			
		Texas Instr	µA7915CKC			
156-0527-01	N		MC7195CT	Linear	3-1	PP
156-0528-00	X	Natl Semic	MM5204AQ	Mem Sel Guide		DL
156-0529-00	X	∞AMD	SN74LS257N	TTL		NP
		Fairchild	74LS257PC/DC			
		Motorola	SN74LS257N/J			
		Natl Semic	DM74LS257N/J			
		Signetics	N74LS257N/F			
		Texas Instr	SN74LS275N/J			
156-0529-01	X		74LS257	TTL		NP
156-0529-02	A	∞AMD	SN74LS257NB2/JB2	TTL	1-15	CR
		Farichild	74LS257PCQR/DCQR			
		Motorola	SN74LS257NDS/JDS			
		Texas Instr	SN74LS257NP3/JP4			
156-0530-00	X	AMD	SN74LS157N	TTL		NP
		Fairchild	74LS157PC			
		Natl Semic	DM74LS157N			
		Texas Instr	SN74LS157N			
156-0530-01	X		74LS157	TTL		NP
156-0530-02	A	∞AMD	SN74LS175NB2/JB2	TTL	1-15	CR
		Fairchild	74LS157PCQR/DCQR			
		Motorola	SN74LS157NDS/JDS			
		Texas Instr	SN74LS157NP3/JP4			
156-0531-00	X	Natl Semic	DS8833N	TTL		NP
156-0531-01	X		8833	TTL		NP
156-0531-02	N	Natl SEmic	DM8833NA+/JA+	TTL	1-17	CR
156-0532-00	A	Analog Dev	171J	Op Amp	3-5	CR
156-0533-00	X		8223	TTL		DL
156-0534-00	A	RCA	CA3102E	Array	3-2	CR
156-0534-01	N	RCA	CA3102EX	Array	3-2	CR
156-0535-00	X	Natl Semic	DM8097N	TTL		NP
156-0535-01	X		8097	TTL		NP
156-0535-02	N	Natl Semic	DM8097NA+/JA+	TTL		CR
156-0536-00	X	Fairchild	74177PC	TTL		NP
		Texas Instr	SN74177N			
156-0536-01	X		SN74177	TTL		NP
156-0536-02	N	Fairchild	74177PCQR/DCQR	TTL	1-15 & 19	CR
		Texas Instr	SN74177NP3/JP4			
156-0537-00	N	Natl Semic	DM8130N	TTL		CR
156-0537-01	N	Natl Semic	DM8130NA+/JA+	TTL		CR
156-0538-00	N	Fairchild	74LS22PC	TTL		CR
		Natl SEmic	DM74LS22N			
		Signetics	N74LS22N			
		Texas Instr	SN74LS22N			
156-0538-01	X		74LS22	TTL		NP
156-0538-02	A	Natl Semic	DM74LS22NA+/JA+	TTL	1-18	CR
		Texas Instr	SN74LS22NP3/JP4			
156-0539-00	N	Natl Semic	DM8136N	TTL		CR
156-0539-01	N	Natl Semic	DM8136NA+	TTL		CR
156-0539-02	X		8136	TTL		NP
156-0540-00	U	Natl Semic	MM52138BUF/N	MOS		LS
156-0541-00	X	AMD	SN74LS139N	TTL		NP
		Fairchild	74LS139PC			
		Natl SEmic	DM74LS139N			
		Signetics	N74LS139N			
		Texas Instr	SN74LS139N			
156-0541-01	X		74LS139	TTL		NP
156-0541-02	A	Fairchild	74LS139PCQR/DCQR	TTL	1-16	CR
		Motorola	SN74LS139NDS/JDS			
		Signetics	N74LS139NB/FB			
		Texas Instr	SN74LS139NP3/JP4			
156-0542-00	A	Signetics	10189N	ECL	1-11	CR
156-0542-01	A	Motorola	MC10189P	ECL	1-11	CR
		Signetics	10189N			
156-0543-00	A	Signetics	10188N	ECL	1-11	CR
156-0543-01	A	Motorola	SC22689P188	ECL	1-11	CR
		Signetics	10188NB/FB			
156-0544-00	X	∞AMD	93L34PC	TTL		OT
		Fairchild	93L34PC/DC			
156-0544-01	X		93L34	TTL		DL
156-0544-02	N	Fairchild	93L34PCQR/DCQR	TTL		CR
156-0545-00	X	Fairchild	4040BDC	CMOS		NP
		Motorola	MC1404BCL			
156-0545-01	A	Fairchild	4040BDCQR	CMOS	1-9	CR
		Motorola	MC14040BCLD			
		RCA	CD4040BFX			
156-0546-00	N	Burr-Brown	3430K	Linear		CR
156-0547-00	N	Harris Semic	HD1-74C157	CMOS	1-9	CR
		Natl Semic	MM74C157J			
156-0547-01	N		74C157	CMOS		NP
156-0547-02	X	Natl Semic	MM74C157JA+	CMOS		CR
156-0547-03	A	Natl Semic	MM74C157JA+	CMOS	1-9	CR
156-0548-00	X	Motorola	MC14585BCL	CMOS		NP
156-0548-01	U		14585	CMOS		NP
156-0548-02	A	Motorola	MC14585BCLD	CMOS	1-9	CR
156-0549-00	N	Texas Instr	SN7400J	TTL	1-18	CS
156-0549-01	N		7400J	TTL	1-18	CS
156-0550-00	N	Texas Instr	SN7401J	TTL	1-18	CS
156-0550-01	N		7401J	TTL	1-18	CS
156-0551-00	N	Texas Instr	SN7402J	TTL	1-18	CS
156-0551-01	N		7402J	TTL	1-18	CS
156-0552-00	N	Texas Instr	SN7404J	TTL	1-14	CS
156-0552-01	N		7404J	TTL	1-14	CS
156-0553-00	N	Texas Instr	SN7410J	TTL	1-18	CS
156-0553-01	N		7410J	TTL	1-18	CS
156-0554-00	N	Texas Instr	SN7420J	TTL	1-18	CS
156-0554-01	N		7420J	TTL	1-18	CS
156-0555-00	N	Texas Instr	SN7430J	TTL	1-18	CS
156-0555-01	N		7320J	TTL	1-18	CS
156-0556-00	N	Texas Instr	SN7442J	TTL	1-16	CS
156-0556-01	N		7442J	TTL	1-16	CS
156-0557-00	N	Texas Instr	SN7473J	TTL	1-17	CR
156-0557-01	N		7473J	TTL	1-17	CR
156-0558-00	N	Texas Instr	SN7474J	TTL	1-17	CS
156-0558-01	N		7474J	TTL	1-17	CS
156-0559-00	N	Texas Instr	SN7475J	TTL	1-19	CS
156-0559-01	N		7475J	TTL	1-19	CS
156-0560-00	N	Texas Instr	SN7476J	TTL	1-17	CS
156-0560-01	N		7476J	TTL	1-17	CS
156-0561-00	N	Texas Instr	SN7493AJ	TTL	1-15	CS
156-0561-01	N		7493J	TTL	1-15	CS
156-0562-00	N	Texas Instr	SN74121J	TTL	1-19	CR
156-0562-01	N		74121	TTL	1-19	CR
156-0563-00	N	Texas Instr	SN74151J	TTL	1-15	CS
156-0563-01	N		74151J	TTL	1-15	CS
156-0564-00	N	Texas Instr	SN74154J	TTL	1-16	CS
156-0564-01	N		74154J	TTL	1-16	CS
156-0565-00	N	Texas Instr	SN74193J	TTL	1-15	CS
156-0565-01	N		74193J	TTL	1-15	CS
156-0566-00	N	Harris	HD1-74C42	CMOS	1-9	CR
		Natl Semic	MM74C42J			
156-0566-01	X		74C42	CMOS		DL
156-0566-02	A	Natl Semic	MM74C42JA+	CMOS	1-9	CR
156-0567-00	X	Fairchild	74LS113PC/DC	TTL		NP
		Motorola	SN74LS113N/J			
		Natl Semic	DM74LS113N/J			
		Signetics	N74LS113N/F			
		Texas Instr	SN74LS113N/J			
156-0567-01	X		74LS113N	TTL		NP
156-0567-02	A	Fairchild	74LS113PCQR/DCQR	TTL	1-17	CR
		Motorola	SN74LS113NDS/JDS			
		Natl Semic	DM74LS113NA+/JA4			
		Signetics	N74LS113NB/FB			
		Texas Instr	SN74LS113NP3/JP4			
156-0568-00	N	Fairchild	4014DC	CMOS	1-10	CR
		Motorola	MC14014BCL			
156-0568-01	A	Fairchild	4014DCQR	CMOS	1-10	CR
		Motorola	MC14014BCLD			
156-0569-00	N	∞AMD	SN74LS190N/J	TTL	1-15	CR
		∞Fairchild	74LS190PC/DC			
		Natl Semic	DM74LS190N/J			
		∞Signetics	N74LS190N			
		∞Texas Instr	SN74LS190N/J			

** NEW DESIGN RECOMMENDATION FROM COMPONENT ENGINEERING:

A = Acceptable
N = Not Recommended
U = Undefined
X = Do Not Use

INTEGRATED CIRCUIT PART NUMBER INDEX (CONT)

TEK PART NUMBER TO VENDOR NUMBER

PART NUMBER	** ND	VENDOR	VENDOR NO.	TYPE	* PAGE NO.	§§ ST
156-0569-01	X	Motorola	SN74LS190NDS	TTL		DL
		Texas Instr	SN74LS190NP3			
156-0570-00	A	Natl Semic	LM319H	Spec Funct	2-3	CR
156-0570-01	N		LM319G	Spec Funct	2-3	NP
156-0571-00	U	Motorola	MC1407L	Linear		DL
156-0572-00	X	Harris	HD1-74C164	CMOS		NP
		Natl Semic	MM74C164J			
156-0572-01	X		74C164	CMOS		NP
156-0572-02	A	Natl Semic	MM74C164JA+	CMOS	1-10	CR
156-0573-00	U	Motorola	MCM6605AL	MOS		CS
156-0574-00	X	Harris	HD1-74C173	CMOS		NP
		Natl Semic	MM74C173J			
156-0574-01	X		74C173	CMOS		NP
156-0574-02	A	Fairchild	407BDCQR	CMOS	1-9	CR
		Natl Semic	MM74C173JA+			
156-0575-00	X	Fairchild	4025DC	CMOS		NP
		Motorola	MC14025BCL			
156-0575-01	X		14025	CMOS		NP
156-0575-02	N	Fairchild	34025DC	CMOS		DL
156-0575-03	A	Motorola	MC14025BCLD	CMOS	1-9	CR
		RCA	CD14025BFX			
156-0575-04	X	Fairchild	4025BDCQR	CMOS		CS
156-0575-05	N	Motorola	MC14025UBCL	CMOS		CS
		RCA	CD4025UBF			
156-0576-00	X	Fairchild	SL110043	CMOS		NP
		Motorola	MC14021BCL			
		RCA	CD4021BF			
156-0576-01	X		14021A	CMOS		NP
156-0576-02	A	Fairchild	4021BDCQR	CMOS	1-10	CR
		Motorola	MC14021BCLD			
		RCA	CD4021BFX			
156-0577-00	N	Harris	HD1-74C08	CMOS	1-9	CR
		Natl Semic	MM74C08J			
156-0577-01	X		74C08	CMOS		CR
156-0577-02	A	Natl Semic	DM74C08NA+/JA+	CMOS	1-9	CR
156-0578-00	X	Fairchild	4528D	CMOS		NP
		Motorola	MC14528BCL			
156-0578-01	X		14528	CMOS		NP
156-0578-02	A	Fairchild	4528DCQR	CMOS	1-10	CR
		Motorola	MC14528BCLDS			
156-0579-00	X	Motorola	MC14520BCL	CMOS		NP
		RCA	CD4520BF			
156-0579-01	X		14520	CMOS		NP
156-0579-02	A	Motorola	MC14520BCLD	CMOS	1-9	CR
		RCA	CD4520BFX			
156-0579-03						SC
156-0580-00	X	Fairchild	34035DC	CMOS		NP
		Motorola	MC14035BCL			
156-0580-01	X		CD4035A	CMOS		NP
156-0580-02	A	Fairchild	4035BDCQR	CMOS	1-10	CS
		Motorola	MC14035BCLD			
		RCA	CD4035BFX			
156-0581-00	A	RCA	CD4040AE	CMOS		DL
156-0582-00	X	Fairchild	4516BDC	CMOS		NP
		Motorola	MC14516BCL			
156-0582-00	X		MC14516CP	CMOS		NP
156-0582-02	X	Motorola	MC14516BCLD	CMOS		DL
		RCA	CD4516BFX			
156-0582-03	A	Fairchild	4516DCQA	CMOS	1-9	CR
		Motorola	MC14516BCLD			
		RCA	CD4516BFX			
156-0583-00	X	Hitachi	HD14559BP	CMOS		NP
		Motorola	MC14559BCL			
156-0583-01	X		14559	CMOS		DL
156-0583-02	N	Motorola	MC14559BCPDS/ BCLDS	CMOS	1-10	CR
156-0583-03	X	Motorola	MC14559BCLD	CMOS		NP
156-0584-00	N	Texas Instr	SN7426J	TTL	1-18	CS
156-0584-01	N		7426J	TTL	1-18	CS
156-0585-00	N	Kierulff	46307-001	TTL	1-14	CS
		Texas Instr	SN7416J			
156-0585-01	N		7416J	TTL	1-14	CS
156-0586-00	N	Texas Instr	SN7413J	TTL	1-18	CS
156-0586-01	N		7413J	TTL	1-18	CS
156-0587-00	N	Texas Instr	SN7412J	TTL	1-18	CS
156-0587-01	N		7412J	TTL	1-18	CS
156-0588-00	N	Texas Instr	SN7408J	TTL	1-18	CS
156-0588-01	N		7408J	TTL	1-18	CS
156-0589-00	N	Texas Instr	SN7417J	TTL	1-14	CR
156-0589-01	N		7417J	TTL	1-14	CR
156-0590-00	N	Texas Instr	SN7425J	TTL	1-18	CS
156-0590-01	N		7425J	TTL	1-18	CS
156-0591-00	N	Fairchild	9N37DC	TTL	1-14	CS
		Natl Semic	DM7437J			
		Signetics	N7437FH			
		Texas Instr	SN7437J			
156-0591-01	N		7437J	TTL	1-14	CS
156-0592-00	N	Texas Instr	SN7438J	TTL	1-14	CS
156-0592-01	N		7438J	TTL	1-14	CS
156-0592-02	N		7438J	TTL	1-14	
156-0593-00	N	Texas Instr	SN74111J	TTL	1-17	CS
156-0593-01	N		74111J	TTL	1-17	CS
156-0594-00	N	Texas Instr	SN74122J	TTL	1-19	CS
156-0594-01	N		74122J	TTL	1-19	CS
156-0595-00	N	∞AMD	SN74123J	TTL	1-19	CS
		Fairchild	74123DC			
		Signetics	N74123F			
		Texas Instr	SN74123J			
156-0595-01	N		74122J	TTL	1-19	CS
156-0596-00	N	Texas Instr	SN74197J	TTL	1-15 & 19	CS
156-0596-01	N		74197J	TTL	1-15 & 19	CS
156-0597-00	N	Texas Instr	SN74150J	TTL	1-15	CR
156-0597-01	N		74150J	TTL	1-15	CR
156-0598-00	N	Texas Instr	SN74145J	TTL	1-16	CS
156-0598-01	N		74145J	TTL	1-16	CS
156-0599-00	N	∞AMD	AM29703PC	Mem Sel Guide	1-5	CR
		Natl Semic	DM74LS189			
156-0599-01	N	AMD	AM27LS03DC	Mem Sel Guide	1-5	CR
		Natl Semic	DM74LS189JA+			
156-0600-00	N	Motorola	MC3441P	Multi Funct	1-3 & 16	CR
156-0600-01	X		3441P	Multi Funct		CR
156-0600-02	A		3441P	Multi Funct	1-3	MP
156-0600-03	A		3441P	Multi Funct	1-3 & 16	MP
156-0601-00	N	Raytheon	RC8201R	TTL		CS
156-0601-01	N		8201	TTL		CS
156-0602-00	N	Texas Instr	SN7495J	TTL	1-20	CS
156-0602-01	N		7495J	TTL	1-20	CS
156-0603-00	X	∞AMD	SN54123J	TTL		CS
		Fairchild	54123DM			
		∞Signetics	554123F			
156-0603-01	X		54123J	TTL		CS
156-0604-00	X	Texas Instr	SN74153J	TTL		CS
156-0604-01	X		74153	TTL		CS
156-0605-00	X	Texas Instr	SN74161J	TTL		CS
156-0605-01	X		74161J	TTL		CS
156-0606-00	X	Texas Instr	SN74177J	TTL		CS
156-0606-01	S		74177J	TTL		CS
156-0607-00	X	Texas Instr	SN74180J	TTL		CS
156-0607-01	S		74180J	TTL		CS
156-0608-00	X	Amador Assoc	AAM112			DL
156-0609-00	X	Texas Instr	SN7427J	TTL		EN
156-0609-01	X		7427J	TTL		EN
156-0610-00	X	Texas Instr	SN74164J	TTL		CS
156-0610-01	X		74164J	TTL		CS
156-0611-00	X	Almac-Stroum	02782-001	TTL		CR
		Cramer/Stle	21452-000			
		Texas Instr	SN7406J			
156-0611-01	X		7406J	TTL		CR
156-0611-02	N		7406J	TTL	1-14	MP
156-0612-00	X	Fairchild	7411DC	TTL		CS
		Signetics	N7411F			
		∞Texas Instr	SN7411J			

* LACK OF ENTRY IN COLUMN INDICATES ITEM IS NOT LISTED IN MFR/TEK SECTION OF CATALOG. THIS INDICATES ITEM IS OBSOLETE, NOT RECOMMENDED FOR NEW DESIGN, OR OF LIMITED USE (SUCH AS SPECIALIZED CUSTOM MASK).

∞ NOT CURRENT VENDOR

§§ FOR STATUS CODES, SEE PAGE 4-39.

INTEGRATED CIRCUIT PART NUMBER INDEX (CONT)

TEK PART NUMBER TO VENDOR NUMBER

PART NUMBER	** ND	VENDOR	VENDOR NO.	TYPE	* PAGE NO.	§§ ST
156-0612-01	X		4711J	TTL		CS
156-0613-00	X	Texas Instr	SN74128J	TTL		CS
156-0613-01	N		74128J	TTL	1-14	CR
156-0614-00	N	Texas Instr	SN74H87J	TTL		CS
156-0614-01	N		74H87J	TTL		CS
156-0615-00	X	Texas Instr	SN74175J	TTL		CS
156-0615-01	X		MJUMKJ	TTL		CS
156-0616-00	X	Texas Instr	SN7440J	TTL		CM
156-0616-01	X		7440J	TTL		DL
156-0617-00	X	Texas Instr	SN74393N	TTL		NP
156-0617-01	X		74393	TTL		NP
156-0617-02	N	Texas Instr	SN74393NP3/JP4	TTL	1-15	CR
156-0618-00	U	Natl Semic	MM5214N/Mask 1	MOS		LS
156-0619-00	U	Natl Semic	MM5214N/Mask 2	MOS		LS
156-0620-00	U	Natl Semic	MM5214N/Mask 3	MOS		LS
156-0621-00	U	Natl Semic	MM5214N/Mask 4	MOS		LS
156-0622-00	N	∞AMD	AM9601DC	TTL	1-19	CS
		∞Motorola	MC9601L			
		Natl Semic	DM8601J			
156-0622-01	N		9601DC	TTL	1-19	CS
156-0623-00	N	∞AMD	AM9602DC	TTL	1-19	CS
		Fairchild	9602DC			
		∞Motorola	MC9602L			
		Natl Semic	DM8602J			
		Signetics	N9602F			
156-0623-01	N		9602DC	TTL	1-19	CS
156-0624-00	A	Motorola	MC12061P	ECL	1-12	CR
156-0624-01	X	Motorola	SC22695P061	ECL		CR
156-0625-00	X	Harris	HD1-74C165	CMOS		NP
		Natl Semic	MM74C165J			
156-0625-01	A	Natl Semic	74C165JA+	CMOS	1-10	CR
156-0626-00	N	Texas Instr	SN74390N	TTL		CR
156-0626-01	N		74C165	TTL		CR
156-0626-02	N	Texas Instr	SN74390NP3/JP4	TTL	1-15	CR
156-0627-00	N	∞Harris	HD1-74C193	CMOS	1-9	CR
		Natl SEmic	MM74C193J			
156-0627-01	X		74C193	CMOS		NP
156-0627-02	A	Fairchild	40193BDC	CMOS	1-9	CR
		Natl Semic	MM74C193JA+			
156-0628-00	N	Fairchild	F34011PC	CMOS		DL
156-0629-00	X	Fairchild	74LS197PC	TTL	1-15	NP
		Natl Semic	DM74LS197N			
		Signetics	N74LS197A			
		Texas Instr	SN74LS197N			
156-0629-01	A	Fairchild	74LS197PCQR/DCQR	TTL	1-15	CR
		Motorola	SN74LS197NDS/JDS			
		Natl Semic	DM74LS197NA+/JA+			
		Signetics	N74LS197NB/FB			
		Texas Instr	SN74LS107NP3/JP4			
156-0630-00	A	Motorola	MC10195L	ECL	1-11	CR
156-0630-01	A	Motorola	MC10195P1	ECL	1-11	CR
156-0631-00	A	Motorola	MC10101	ECL	1-11	CR
		∞NEC America	μPB10101C			
156-0631-01	A	Motorola	MC10101L	ECL	1-11	CR
		Plessey	SP10101E			
156-0631-02	A	Motorola	SC22689P101	ECL	1-11	CR
156-0631-03	A	Motorola	MC10101P1	ECL	1-11	CR
156-0632-00	A	Motorola	MC10173L	ECL	1-12	CR
156-0632-01	A		MC10173	ECL	1-12	PP
156-0632-02	A	Motorola	SC22689P173	ECL	1-12	CR
156-0633-00	A	Motorola	MC10176L	ECL	1-11	CR
156-0633-01	A	Motorola	SC22689L176	ECL	1-11	CR
156-0633-02	A	Motorola	MC10176L1	ECL		CR
156-0634-00	A	Motorola	MC3460L	MOS	1-13	CS
156-0634-01	X		MC3460	MOS		DL
156-0635-00	U	Intersil	IM7505A-2CJF	MOS		NP
		Motorola	MCM6605AL-2			
156-0635-01	U	DCA Reliab	6605AL-2	MOS		LS
		Motorola	MCM6605-01			
156-0635-02	U		6605AL-2	MOS		CS
156-0636-00	A	∞Fairchild	10111PC	ECL	1-11	CR
		Motorola	MC10111LP			
		∞Signetics	10111N			
		∞Texas Instr	SN10111N			
156-0636-01	X		10111	ECL		DL
156-0636-02	X	Fairchild	SL81661	ECL		DL
		Motorola	MC10111P1/L1			
156-0636-03						SC
156-0637-00	A	Motorola	MC10174P	ECL	1-11	CR
156-0637-01	A	Motorola	MC10174P1	ECL	1-11	CR
156-0638-00	A	∞Fairchild	10141DC	ECL	1-12	CS
		Motorola	MC10141L			
156-0638-01	A	∞Fairchild	SL81651	ECL	1-12	CR
		Motorola	MC10141P1/L1			
156-0638-02	X	Fairchild	10141DCQR	ECL		DL
		Motorola	MC10141L1			
156-0639-00	A	Motorola	MC10110P	ECL	1-11	CR
156-0639-01	A	Motorola	MC10110P1	ECL	1-11	PP
156-0640-00	A	Motorola	MC10164L	ECL	1-11	CR
156-0640-01	A	Texas Instr	SN74S139N3	ECL	1-11	PP
156-0640-02	A	Motorola	SC22689P164	ECL	1-11	CR
156-0641-00	A	Motorola	MC10136L	ECL	1-11	CR
		∞NEC America	μPB10136D			
156-0641-01	A	Motorola	MC10136LDS	ECL	1-11	CR
156-0642-00	A	Motorola	MC10138L	ECL	1-11	CR
156-0642-01	A	Motorola	MC10138L1	ECL	1-11	CR
156-0643-00	N	Intel	D8008-1	Multi Funct		CR
156-0644-00	A	Motorola	MC14066BCL	Spec Funct	2-3	CR
156-0644-01	A		CD4066AE	Spec Funct	2-3	CR
156-0644-02	A	RCA	CD4066BF	Spec Funct		CR
156-0644-03	A	Motorola	MC14066BCLD	Spec Funct	2-3	CR
		RCA	CD4066BFX			
156-0644-04						SC
156-0645-00	X	Fairchild	74LS14PC/DC	TTL		NP
		Motorola	SN74LS14N/J			
		Natl Semic	DM74LS14N/J			
		Signetics	N74LS14N/F			
		Texas Instr	SN74LS14N/J			
156-0645-01	X		74LS14	TTL		NP
156-0645-02	A	Fairchild	74LS14PCQR/DCQR	TTL	1-14	CR
		Motorola	SN74LS14NDS/JDS			
		Natl Semic	DM74LS14NA+/JA+			
		Signetics	N74LS14NB/FB			
		Texas Instr	SN74LS14NP3/JP4			
156-0646-00	X	Fairchild	74LS93PC	TTL		NP
		Natl Semic	DM74LS93N			
		Signetics	N74LS93N			
		Texas Instr	SN74LS93N			
156-0646-01	X		74LS93	TTL		NP
156-0646-02	A	Fairchild	74LSPCQR/DCQR	TTL	1-15	CR
		Motorola	SN74LS93NDS/JDS			
		Natl Semic	DM74LS93NA+/JA+			
		Signetics	N74LS93NB/FB			
		Texas Instr	SN74LS93NP3/JP4			
156-0647-00	U	Harris	HD1-0165-5	MOS		OT
		Intel	IN957B			
156-0648-00	X	Natl Semic	MM74C151N	CMOS		DL
156-0649-00	N	∞Harris	HD1-80C97	CMOS	1-9	CR
		Natl Semic	MM80C97J			
156-0649-01	X		80C97	CMOS		NP
156-0649-02	A	Fairchild	40097DCQR	CMOS	1-9	CR
		Natl Semic	MM80C97JA+			
156-0650-00	X	Harris	HD1-74C154	CMOS		DL
		Natl Semic	MM74C154J			
156-0651-00	X	∞AMD	SN74LS164N	TTL		NP
		Fairchild	74LS164PC/DC			
		Natl Semic	DM74LS164N/J			
		Signetics	N74LS164AN/F			
		Texas Instr	SN74LS164N/J			
156-0651-01	X		74LS164	TTL		NP
156-0651-02	A	Fairchild	74LS164PCQR/DCQR	TTL	1-20	CR
		Motorola	SN74LS164NDS/JDS			
		Signetics	N74LS164NB/FB			
		Texas Instr	SN74LS164NP3/JP4			

**NEW DESIGN RECOMMENDATION FROM COMPONENT ENGINEERING:

A = Acceptable
N = Not Recommended
U = Undefined
X = Do Not Use

INTEGRATED CIRCUIT PART NUMBER INDEX (CONT)

TEK PART NUMBER TO VENDOR NUMBER

PART NUMBER	** ND	VENDOR	VENDOR NO.	TYPE	* PAGE NO.	§§ ST
156-0652-00	X	Fairchild	74LS266PC	TTL		NP
		Natl Semic	DM74LS266N			
		Signetics	N74LS266N			
		Texas Instr	SN74LS266N			
156-0652-01	X		74LS366	TTL		NP
156-0652-02	A	Fairchild	74LS266PCQR/DCQR	TTL	1-18	CR
		Motorola	SN74LS266NDS/JDS			
		Natl Semic	DM74LS266NA+/JA+			
		Signetics	N74LS266NB/FB			
		Texas Instr	SN74LS266NP3/JP4			
156-0652-03	N	Signetics	CC3449N	TTL		CR
156-0653-00	N	AMD	AM8838N/J	TTL		NP
		Natl Semic	DS8838N/J			
156-0653-01	X		DS8838N	TTL		NP
156-0653-02	N	AMD	AM8838NB/JB	TTL	1-17	CR
		Natl Semic	DS8838NA+/JA+			
156-0654-00	X	AMD	9324PC			DL
156-0654-01	X		9324			DL
156-0655-00	A	Motorola	MC7905.2CT	Linear	3-1	CR
		Silicon Gen	SG79052CP			
		Texas Instr	UA7952CKC			
156-0655-01	A	Motorola	MC7905.2CTD	Linear	3-1	CR
		Texas Instr	UA7952CKC3			
156-0655-02	A		7905.2	Linear		PP
156-0656-00	X	Fairchild	74LS90PC/DC	TTL		NP
		Natl Semic	DM74LS90N/J			
		Texas Instr	SN74LS90N/J			
156-0656-01	X		74LS90	TTL		NP
156-0656-02	A	Fairchild	74LS90PCQR/DCQR	TTL	1-15	CR
		Motorola	SN74LS90NDS/JDS			
		Texas Instr	SN74LS90NP3/JP4			
156-0657-00	N	∞Fairchild	F10410DC	Mem Sel Guide	1-5	CR
		Motorola	MCM10144L/ SCM62462L			
		∞NEC America	μPD10144D			
		∞Raytheon	RC10144			
		∞Texas Instr	10144			
156-0657-01	N		MCM10144	Mel Sel Guide	1-5	CR
156-0657-02	N	∞Fairchild	F10144DC	Mem Sel Guide	1-5	CR
		Motorola	MCM10144L/ SCM30111LK			
		∞NEC Electron	μD10144D			
156-0658-00	A	Amer Micro	S6850P/C	Multi Funct	1-2	CR
		Fairchild	F6850PC/DC			
		Hitachi	HD46850P/C			
		Motorola	MC6850P/L			
156-0658-01	A	Amer Micro	S6850C/E-L	Multi Funct	1-2	CR
		Fairchild	6850DCQR			
		Motorola	MC67608P			
156-0659-00	U	Motorola	MCM3953	MOS		DL
156-0659-01		Motorola	SCM3949P			NP
156-0660-00	U	Motorola	MCM6590L	MOS		DL
156-0660-01						LS
156-0661-00	U	Motorola	MCM6590L	MOS		DL
156-0661-01						LS
156-0662-00	U	Motorola	MCM6590L	MOS		DL
156-0662-01						LS
156-0663-00	U	Motorola	MCM6590L	MOS		DL
156-0663-01						LS
156-0664-00	U	Motorola	MCM6590L	MOS		DL
156-0664-01	U	Motorola	SCM3954P			NP
156-0664-02						LS
156-0665-00	U	Motorola	MCM6590L	MOS		DL
156-0665-01						NP
156-0665-02						LS
156-0666-00	U	Motorola	MCM6590L	MOS		DL
156-0666-01						LS
156-0667-00	U	Motorola	MCM6590L	MOS		DL
156-0667-01		Motorola	SCM3957P			NP
156-0667-02						LS
156-0668-00	U	Motorola	MCM6590L	MOS		DL
156-0668-01						LS
156-0668-02		Motorola	SCM3897L	MOS		NP
156-0669-00	U	Motorola	MCM6590L	MOS		DL
156-0669-01						LS
156-0670-00	U	Motorola	MCM6590L	MOS		DL
156-0670-01						LS
156-0671-00	U	Motorola	MCM6590L	MOS		DL
156-0671-01		Motorola	SCM3961P			NP
156-0671-02						LS
156-0672-00	U	Motorola	MCM6590L	MOS		DL
156-0672-01		Motorola	SCM3962P			NP
156-0672-02						LS
156-0673-00	U	Motorola	MCM6590L	MOS		NP
156-0673-01		Motorola	SCM3963P			NP
156-0673-02		Motorola	SCM3952P/L			NP
156-0673-03						LS
156-0674-00	U	Motorola	MCM6590L	MOS		NP
156-0674-01		Motorola	SCM3964P			NP
156-0674-02						LS
156-0675-00	U	Motorola	SCM3958	MOS		NP
156-0675-01		Motorola				LR
156-0676-00	U	Motorola	SCM3859	MOS		NP
156-0676-01		Motorola	SCM37202P/L			NP
156-0676-02						LR
156-0677-00	U	Motorola	SCM3860P	MOS		NP
156-0677-01						LR
156-0678-00	U	Motorola	SCM3861L/P	MOS		LR
156-0679-00	X	Fairchild	74LS283PC	TTL		NP
		Natl Semic	DM74LS283N			
		Signetics	N74LS283N			
		Texas Instr	SN74LS283N			
156-0679-01	A	Fairchild	74LS283PCQR/DCQR	TTL	1-14	CR
		Motorola	SN74LS283NDS/JDS			
		Natl Semic	DM74LS283NA+/JA+			
		Signetics	N74LS283NB/FB			
		Texas Instr	SN74LS283NP3/JP3			
156-0680-00	N	∞Harris	HD-3-74C107-9	CMOS	1-9	CR
		Natl Semic	MM74C107J			
156-0680-01	X		74C107	CMOS		NP
156-0680-02	A	Natl Semic	MM74C107J/A+	CMOS	1-9	CR
156-0681-00	X	Fairchild	4006DC	CMOS		NP
		Motorola	MC14006BCL			
156-0681-01	X		CD4006	CMOS		NP
156-0681-02	A	Fairchild	4006BDCQR	CMOS	1-10	CR
		Motorola	MC14006BCLDS			
156-0682-00	N	Harris	HD1-74C174	CMOS	1-9	CR
		Natl Semic	MM74C174J			
156-0682-01	X		74C174	CMOS		NP
156-0682-02	A	Natl Semic	MM74C174NA+/JA+	CMOS	1-9	CR
156-0683-00	N	Signetics	N8T37N	TTL		CR
156-0683-01	N		8T37B	TTL		CR
156-0684-00	A	Natl Semic	LM323K	Linear	3-1	CR
156-0685-00	A	Natl Semic	LM725CN	Op Amp	3-4	CR
156-0685-01	X		LM725C	Op Amp		DL
156-0685-02	X		LM725C	Op Amp		DL
156-0685-03	A	Natl Semic	LM725CN/A+	Op Amp	3-4	CR
156-0686-00	A	RCA	CA3130S	Op Amp	3-4	CR
156-0686-01	N	RCA	CA3130S	Op Amp	3-4	PP
156-0686-02	A	RCA	CA3131SX	Op Amp	3-4	CR
156-0687-00	A	Motorola	MC10113	ECL	1-11	CR
156-0687-01	A	Motorola	SC22689P113	ECL	1-11	CR
156-0688-00	A	Motorola	MC10135L	ECL	1-11	CR
156-0688-01	A	∞Fairchild	SL81652	ECL	1-11	CR
		Motorola	SC22689L135			
		Signetics	10135FB			
156-0689-00	X	Intel	C2704	Mem Sel Guide		NP
156-0689-01						NP
156-0689-02						NP
156-0689-03						NP
156-0690-00	X	Fairchild	74S02PC	TTL		NP
		Natl Semic	DM74S02N			
		Signetics	N74S02N			
		Texas Instr	SN74S02N			

* LACK OF ENTRY IN COLUMN INDICATES ITEM IS NOT LISTED IN MFR/TEK SECTION OF CATALOG. THIS INDICATES ITEM IS OBSOLETE, NOT RECOMMENDED FOR NEW DESIGN, OR OF LIMITED USE (SUCH AS SPECIALIZED CUSTOM MASK).

∞ NOT CURRENT VENDOR

§§ FOR STATUS CODES, SEE PAGE 4-39.

INTEGRATED CIRCUIT PART NUMBER INDEX (CONT)

TEK PART NUMBER TO VENDOR NUMBER

PART NUMBER	** ND	VENDOR	VENDOR NO.	TYPE	* PAGE NO.	§§ ST
156-0690-01	X		74S02	TTL		NP
156-0690-02	X	Texas Instr	SN74S02J/N	TTL		CR
156-0690-03	A	Fairchild	74S02PCQR/DCQR	TTL	1-18	CR
		Natl Semic	DM74S02NA+/JA+			
		Signetics	N74S02NB/FB			
		Texas Instr	SN74S02NP3/JP4			
156-0691-00	N	∞Almac-Strom	SN74S381N/J	TTL	1-14	CS
		Monolithic	MMISN74S381			
		Texas Instr	SN74S381N/J			
156-0691-01	N		74S381	TTL		NP
156-0691-02	A	Monolithic	SN74S381J	TTL		CR
		Texas Instr	SN74S381J			
156-0691-03	X		74S381J	TTL		DL
156-0692-00	N	∞Fairchild	74S183PC/DC	TTL	1-19	CR
		Monolithic	74S183N/D			
		∞Natl Semic	DM74S182N			
		Signetics	N74S183N/F			
		Texas Instr	SN74S182N/J			
156-0692-01	N		74S182	TTL	1-19	CR
156-0692-02	A	Monolithic	74S182N/D	TTL	1-19	CR
		Signetics	N74S182NB/FB			
		Texas Instr	SN74S182NP3/JP4			
156-0693-00	X	AMD	SN74SL39N	TTL		NP
		Fairchild	74S139PC			
		Natl Semic	DM74S139N			
		Signetics	N74S139N			
		Texas Instr	SN74S139N			
156-0693-01	X		74S139	TTL		NP
156-0693-02	A	AMD	SN74S139NB/JB	TTL	1-16	CR
		Fairchild	74S139PCQR/DCQR			
		Natl Semic	DM74S139NA+/JA+			
		Signetics	N74S139NB/FB			
		Texas Instr	SN74S139NP3/JP4			
156-0694-00	X	AMD	SN74S138N	TTL		NP
		Fairchild	74S138PC			
		Natl Semic	DM74S138N			
		Signetics	N74S138N			
		TExas Instr	SN74S138N			
156-0694-01	X		74S138	TTL		NP
156-0694-02	A	AMD	SN74S138JB	TTL	1-16	CR
		Fairchild	74S138DCQR			
		Natl Semic	DM74S138JA+			
		Signetics	N74S138FB			
		Texas Instr	SN74S138JP4			
156-0695-00	X	Signetics	2606-B1	Mem Sel Guide		LR
156-0695-01	N		2606B-1	Mem Sel Guide		CR
156-0696-00	X	Texas Instr	SN74265N	TTL		NP
156-0696-01	X		74265	TTL		NP
156-0696-02	N	Texas Instr	SN74265JP4	TTL	1-18	CR
156-0697-00	N	Natl Semic	DM74194N	TTL	1-20	CS
		Signetics	N74194N			
		Texas Instr	SN74194N			
156-0697-01	X		74194	TTL		DL
156-0698-00	N	AMD	AM9101BPC	Mem Sel Guide	1-6	CR
		∞Intel	B2101A-4			
		∞Signetics	2101-1N			
156-0698-01	N	AMD	AM9101BDC	Mem Sel Guide	1-6	CS
		Intel	B2101A-4			
		Signetics	2101-1N			
156-0699-00	N	Fairchild	723HM	Linear	3-1	CR
156-0699-01	N	Fairchild	UA723HMQB	Linear	3-1	CR
		Natl Semic	LM723H/883			
		Silicon Gen	SG723T			
156-0700-00	N	Natl Semic	LM741H	Op Amp		CS
		∞Signetics	UA741T			
156-0700-01	A	RCA	CA741S	Op Amp		CR
156-0701-00	A	AMD	AM74S251N	TTL		CR
		Natl Semic	DM74S251N			
		Signetics	N74S251B			
		Texas Instr	SN74S251N			
156-0702-00	A	Natl Semic	DM74LS366N/J	TTL	1-14	CR
		Texas Instr	SN74LS366N/J			
156-0702-01	A	Natl Semic	DM74LS366NA+/JA+	TTL	1-14	CR
		Texas Instr	SN74LS366NP3/JP4			
156-0703-00	X	Fairchild	74S64PC	TTL		NP
		Natl Semic	DM74S64N			
		Signetics	N74S64N			
		Texas Instr	SN74S64N			
156-0703-01	X		74S64	TTL	1-18	NP
156-0703-02	A	Fairchild	74S64PCQR/DCQR	TTL	1-18	CR
		Signetics	N74S64NB/FB			
		Texas Instr	SN74S64N3/J4			
156-0704-00	A	Motorola	MC14046CP	Spec Funct	2-3	CR
156-0704-01	N	Motorola	MC14046CP	Spec Funct		CR
156-0705-00	A	Motorola	SC62438L	ECL	1-11	CS
		Plessey	SP1651B			
156-0706-00	N	Texas Instr	SN74221N	TTL	1-19	CR
156-0706-01	N		74221	TTL	1-19	CR
156-0706-02	N	Texas Instr	SN74221NP3/JP4	TTL	1-19	CR
156-0707-00	X	Fairchild	74S86PC/DC	TTL		NP
		Natl SEmic	DM74S86N/J			
		Signetics	N74S86N/F			
		Texas Instr	SN74S86N/J			
156-0707-01	X		74S86	TTL		NP
156-0707-02	X		74S86	TTL		DL
156-0707-03	A	Fairchild	74S86DCQR/PCQR	TTL	1-18	CR
		Natl Semic	DM74S86NA+/JA+			
		Signetics	N74S86NB/FB			
		Texas Instr	SN74S86NP3/JP4			
156-0708-00	N	AMD	AM2708DC	Mem Sel Guide	1-7	CR
		∞Intel	C2708			
		Motorola	MCM2708L			
		∞Natl Semic	MM2708Q			
156-0709-00	U	Intel	A0111	MOS		LR
156-0710-00	U	Gen Instr	16K7-301	MOS		CR
		Intel	C8316			
156-0711-00	X	Elec Arrays	EA42303SG	MOS		CM
156-0712-00	U	Motorola	SCM3842P	MOS		NP
156-0712-01						LS
156-0713-00	U	Motorola	SCM3843P	MOS		NP
156-0713-01		Motorola	SCM3893L			CS
156-0714-00	U	Motorola	SCM3844P	MOS		NP
156-0714-01						LS
156-0715-00	U	Motorola	SCM3845P	MOS		NP
156-0715-01		Motorola				CS
156-0716-00	A	Amer Micro	S6810-A	Mem Sel Guide	1-6	CR
		Motorola	MCM6810S			
156-0716-01	A	∞AMI	S6810-A	Mem Sel Guide	1-6	CR
		Motorola	MCM6810LDS			
156-0717-00	N	Analog Dev	MP2321-01	Linear		CM
156-0718-00	X	Fairchild	74LS27PC	TTL		NP
		Natl Semic	DM74LS27N			
		Signetics	N74LS27N			
		Texas Instr	SN74LS27N			
156-0718-01	X		74LS27	TTL		NP
156-0718-02	X		74LS27	TTL		DL
156-0718-03	A	Fairchild	74LS27PCQR/DCQR	TTL	1-18	CR
		Motorola	SN74LS27NDS/JDS			
		Signetics	N74LS27NB/FB			
		Texas Instr	SN74LS27NP3/JP4			
156-0719-00	A	Analog Dev	AD7533LN	Spec Funct	2-2	CR
		Micro Sys	MP7520LN			
156-0719-01	A	Natl Semic	DAC1020LCD/A+	Spec Funct	2-2	CR
156-0720-00	X	Fairchild	74LS368PC	TTL		NP
		Natl Semic	DM74LS368N			
		Texas Instr	SN74LS368N			
156-0720-01	X		74LS368	TTL		NP
156-0720-02	A	Fairchild	74LS368PCQR/DCQR	TTL	1-16	CR
		Motorola	SN74LS368NDS/JDS			
		Texas Instr	SN74LS368NP3/JP4			
156-0721-00	X	Fairchild	74LS132PC	TTL		NP
		Natl Semic	DM74LS132N			
		Signetics	N74LS132N			
		Texas Instr	SN74LS132N			
156-0721-01	X		74LS132	TTL		NP
156-0721-02	A	Fairchild	74LS132PCQR/DCQR	TTL	1-18	CR
		Motorola	SN74LS132NDS/JDS			
		Natl Semic	DM74LS132NA+/JA+			
		Signetics	N74LS132NB/FB			
		Texas Instr	SN74LS132N3/J4			

** NEW DESIGN RECOMMENDATION FROM COMPONENT ENGINEERING:

A = Acceptable
N = Not Recommended
U = Undefined
X = Do Not Use

INTEGRATED CIRCUIT PART NUMBER INDEX (CONT)
TEK PART NUMBER TO VENDOR NUMBER

PART NUMBER	** ND	VENDOR	VENDOR NO.	TYPE	* PAGE NO.	§§ ST
156-0721-03	X		74LS132	TTL		DL
156-0721-04	X		74LS132	TTL		DL
156-0722-00	X	Fairchild	74LS12PC	TTL		NP
		Natl Semic	DM74LS12N			
		Signetics	N74LS12A			
		Texas Instr	SN74LS12N			
156-0722-01	X		74LS12	TTL		NP
156-0722-02	A	Motorola	SN74LS12NDS/JDS	TTL	1-18	CR
		Natl Semic	DM74LS12NA+/JA+			
		Texas Instr	SN74LS12NP3/JP4			
156-0723-00	A	Analog Dev	AD7511DIKN/KD	Spec Funct	2-3	CR
156-0723-01	A		AD7511	Spec Funct	2-3	CR
156-0724-00	X	Fairchild	74LS05PC/DC	TTL		NP
		Motorola	74LS05N/J			
		Natl Semic	DM74LS05N/J			
		Signetics	N74LS05N/F			
		Texas Instr	SN74LS05N/J			
156-0724-01	X		74LS05	TTL		NP
156-0724-02	A	Fairchild	74LS05PCQR/DCQR	TTL	1-14	CR
		Motorola	SN74LS05NDS/JDS			
		Natl Semic	DM74LS05NA+/JA+			
		Signetics	N74LS05NB/FB			
		Texas Instr	SN74LS05NP3/JP4			
156-0725-00	U	Natl Semic	MM5213NCUQ/N	MOS		LR
156-0726-00	U	Natl Semic	MM5213N/PRO.2	MOS		LR
156-0727-00	X	Fairchild	74LS196PC	TTL		NP
		Natl Semic	DM74LS196N			
		Signetics	N74LS196N			
		Texas Instr	SN74LS196N			
156-0727-01	A	Fairchild	74LS196PCQR/DCQR	TTL	1-15	CR
		AMD	SN74LS196NB2/JB2			
		Motorola	SN74LS196NDS/JDS			
		Signetics	N74LS196NB/FB			
		Texas Instr	SN74LS196NP3/JP4			
156-0728-00	X	Fairchild	74LS09PC/DC	TTL		NP
		Natl Semic	DM74LS09N/J			
		∞Signetics	N74LS09N			
		Texas Instr	SN74LS09N/J			
156-0728-01	X		74LS09	TTL		NP
156-0728-02	A	Fairchild	74LS09PCQR/DCQR	TTL	1-18	CR
		Motorola	SN74LS09NDS/JDS			
		Texas Instr	SN74LS09NP3/JP4			
156-0729-00	N	Natl Semic	DM80L98N	TTL		CR
156-0729-01	N	Natl Semic	DM80L98NA+/JA+	TTL		CR
156-0730-00	X	Fairchild	74LS33PC/DC	TTL		NP
		Motorola	SN74LS33N/J			
		∞Natl Semic	DM74LS33N			
		Signetics	N74LS33N/F			
		Texas Instr	SN74LS33N/J			
156-0730-01	X		74LS33	TTL		NP
156-0730-02	A	Fairchild	74LS33PCQR/DCQR	TTL	1-14	CR
		Motorola	SN74LS33NDS/JDS			
		Signetics	N74LS33NB/FB			
		Texas Instr	SN74LS33NP3/JP4			
156-0731-00	X	Motorola	SN74LS76AN/J	TTL		NP
		Natl Semic	DM74LS76N/J			
		Signetics	N74LS76N/F			
		Texas Instr	SN74LS76AN/J			
156-0731-01	X		74LS76	TTL		NP
156-0731-02	A	Motorola	SN74LS76NP3/JP4	TTL	1-17	CR
		Natl Semic	DM74LS76NA+/JA+			
		Signetics	N74LS76NB/FB			
		Texas Instr	SN74LS76NP3/JP4			
156-0732-00	A	Fairchild	74LS170PC	TTL	1-19	CS
		Natl Semic	DM74LS170N			
		Signetics	N74LS170B			
		Texas Instr	SN74LS170N			
156-0732-01	N		74LS170	TTL	1-19	DL
156-0733-00	X	Motorola	SN74LS221N/J	TTL		NP
		Natl Semic	DM74LS221N/J			
		Texas Instr	SN74LS221N/J			
156-0733-01	X		74LS221	TTL		NP
156-0733-02	A	Motorola	SN74LS221NDS/JDS	TTL	1-19	CR
		Texas Instr	SN74LS221N3/J4			
156-0733-03	N	Texas Instr	SN74LS221N/J	TTL	1-19	CR
156-0734-00	N	Fairchild	74LS295PC/DC	TTL	1-20	CR
		Natl Semic	DM74LS295N/J			
		Signetics	N74LS295N/F			
		Texas Instr	SN74LS295N/J			
156-0734-01	N		74LS295A	TTL	1-20	CR
156-0734-02	A	Fairchild	74LS295APCQR/DCQR	TTL	1-20	CR
		Signetics	N74LS295BNB/FB			
		Texas Instr	SN74LS295BNPe/JP4			
156-0735-00	X	Natl Semic	DM74LS75N	TTL		NP
		Signetics	N74LS74N			
		Texas Instr	SN74LS75N			
156-0735-01	X		74LS75	TTL		NP
156-0735-02	A	Motorola	SN74LS75NDS/JDS	TTL	1-19	CR
		Natl Semic	DM74LS75NA+/JA+			
		Signetics	N74LS75NB/FB			
		Texas Instr	SN74LS75NP3/JP4			
156-0736-00	X	Fairchild	74LS42PC	TTL		NP
		Natl Semic	DM74LS42N			
		Signetics	N74LS42N			
		Texas Instr	SN74LS42N			
156-0736-01	X		74LS42	TTL		NP
156-0736-02	A	Fairchild	74LS42PCQR/DCQR	TTL	1-16	CR
		Motorola	SN74LS42NDS/JDS			
		Natl Semic	DM74LS42NA+/JA+			
		Signetics	N74LS42NB/FB			
		Texas Instr	SN74LS42NP3/JP4			
156-0737-00	X	Natl Semic	DM8574N	Mem Sel Guide		DL
156-0738-00	X	AMD	SN74S174N	TTL		NP
		Fairchild	9S174/74S174PC			
		Texas Instr	SN74S174N			
156-0738-01	X		74S174	TTL		NP
156-0738-02	N	AMD	SN74S174J	TTL		DL
		Signetics	N74S174F			
156-0738-03	N	AMD	SN74S174J	TTL	1-17	CR
		Signetics	N74S174F			
		Texas Instr	SN83202J			
156-0738-04	A	Texas Instr	SN74S174JP4	TTL	1-17	CR
156-0739-00	X	Fairchild	74S32PC	TTL		NP
		Signetics	N74S32N			
		Texas Instr	SN74S32N			
156-0739-01	X		74S32	TTL		NP
156-0739-02	A	Fairchild	74S32DCQR/PCQR	TTL	1-18	CR
		Signetics	N74S32NB/FB			
		Texas Instr	SN74S32NP3/JP4			
156-0740-00	N	Motorola	MC3459P	TTL	1-16	XE
156-0740-01	X		MC3459	TTL		CR
156-0740-02	N		3459	TTL	1-16	MP
156-0741-00	N	∞AMD	93L16PC	TTL		CR
		Fairchild	93L16PC/DC			
156-0741-01	N	Fairchild	93L16	TTL		CR
156-0742-00	A	Natl Semic	LM318N	Op Amp	3-3	CR
		Texas Instr	LM318P			
156-0742-01	A		LM318N	Op Amp	3-3	CR
156-0742-02	A	Natl Semic	LM318N/A+	Op Amp	3-3	CR
		Texas Instr	LM318P3			
156-0743-00	A	Motorola	MC10186L	ECL	1-11	CR
156-0743-01	A	Motorola	MC10186L1	ECL	1-11	CR
156-0744-00	N	∞AMD	SN74S194N	TTL	1-20	CR
		Fairchild	74F194PC/DC			
		Texas Instr	74S194N/J			
156-0744-01	N		74S194	TTL	1-20	CR
156-0744-02	X		74S194	TTL		DL
156-0744-03	N	Texas Instr	SN74S194J	TTL	1-20	CR
156-0744-04	A	Texas Instr	SN74S194NP3/JP4	TTL	1-20	CR
156-0745-00	X	∞Fairchild	4069DC	CMOS		NP
		Motorola	MC14069UBCL			
		RCA	CD4069UBF			

• LACK OF ENTRY IN COLUMN INDICATES ITEM IS NOT LISTED IN MFR/TEK SECTION OF CATALOG. THIS INDICATES ITEM IS OBSOLETE, NOT RECOMMENDED FOR NEW DESIGN, OR OF LIMITED USE (SUCH AS SPECIALIZED CUSTOM MASK).

∞ NOT CURRENT VENDOR.

§§ FOR STATUS CODES, SEE PAGE 4-39.

INTEGRATED CIRCUIT PART NUMBER INDEX (CONT)

TEK PART NUMBER TO VENDOR NUMBER

4

PART NUMBER	** ND	VENDOR	VENDOR NO.	TYPE	* PAGE NO.	§§ ST
156-0745-01	A	Motorola	MC14069UBCLD	CMOS	1-9	CR
		RCA	CD4069UBFX			
156-0745-02						SC
156-0746-00	A	Motorola	MC10158P	ECL	1-11	CR
156-0746-01	A	Motorola	MC10158P1/L1	ECL	1-11	CR
156-0746-02						SC
156-0747-00	U	Motorola	SCM3965P	MOS		NP
156-0747-01						LS
156-0748-00	U	Motorola	SCM3966P	MOS		NP
156-0748-01						LS
156-0749-00	X	Motorola	MC14435FL	Linear		OB
156-0750-00	X	Harris	HD1-74C221	CMOS		OB
156-0750-01	X		74C221	CMOS		OB
156-0750-02	A	Natl Semic	MM74C221J/A+	CMOS	1-10	CR
156-0751-00	X	Motorola	MC1405L	Linear		OB
156-0752-00	X	∞Mitel	SIL14518BF	CMOS		NP
		Motorola	MC14518BCL			
		Natl Semic	CD14518BCJ			
156-0752-01	A	Motorola	MC14518BCLD	CMOS	1-9	CR
		Natl SEmic	MM14518BCJA+			
156-0753-00	N	RCA	CD4086BF	CMOS	1-9	CR
156-0753-01	X	Fairchild	4086BDCQR	CMOS		OB
		RCA	CD4086BFX			
156-0754-00	N	∞Mitel	SIL4002BF	CMOS	1-9	CR
		Motorola	MC14002BCL			
		RCA	CD4002BF			
156-0754-01	N		4002	CMOS	1-9	CR
156-0754-02	A	Motorola	MC14002BCLD	CMOS	1-9	CR
		RCA	CD4002BFX			
156-0755-00	A	Motorola	SC62473	ECL		CR
		Signetics	10216			
156-0755-01	A		10216	ECL		CR
156-0756-00	N	∞Mitel	SIL4028BF	CMOS	1-9	CR
		Motorola	MC14028BCL			
		RCA	CD4028BF			
156-0756-01	A	Motorola	MC14028BCLD	CMOS	1-9	CR
		RCA	CD4028BFX			
156-0757-00	A	Fairchild	F10211DC	ECL	1-12	CR
		Motorola	MC10211P/L			
		∞Signetics	10211N			
		∞Texas Instr	SN10211N/J			
156-0757-01	A	Fairchild	SL81653	ECL	1-12	CR
		Motorola	MC10211P1/L1			
156-0758-00	A	∞Fairchild	F10172DC	ECL	1-11	CS
		Motorola	MC10172L			
		Signetics	10172F			
		∞Texas Instr	SN10172J			
156-0758-01	A	∞Fairchild	SL81654	ECL	1-11	CR
		Motorola	MC10172P1/L1			
156-0759-00	A	Fairchild	F10103PC/DC	ECL	1-11	CR
		Motorola	MC10103L/P			
		Signetics	10103B/F			
		∞Texas Instr	SN10103N/J			
156-0759-01	X		10103	ECL		NP
156-0759-02	A	Fairchild	SL81655	ECL	1-11	CR
		Motorola	SC22689P103			
156-0760-00	X	Fairchild	F10175DC	ECL		NP
		Motorola	MC10175L			
		Signetics	10175F			
		∞Texas Instr	SN10175J			
156-0760-01	A	Fairchild	SL81656	ECL	1-12	CR
		Motorola	SC22689L175			
156-0761-00	A	∞Fairchild	10415ADC	Mem Sel Guide	1-5	CR
		Motorola	MCM10146L/ SCM30121L			
156-0761-01	A	Motorola	MCM10146L	Mem Sel Guide	1-5	CR
156-0762-00	X	Fairchild	F10153DC	ECL		DL
		Motorola	MC10153L			
		Signetics	10153F			
		Texas Instr	SN10153J			
156-0763-00	A	Motorola	MC14490VL	CMOS	1-10	CR
156-0763-01	N		14490	CMOS	1-10	CR
156-0763-02	A	Motorola	MC14490BCLD	CMOS	1-10	CR
156-0764-00	U	Motorola	MCM68308	MOS		CR
156-0765-00	X	Texas Instr	SN74S169J	TTL		NP
156-0765-01	X		74S169	TTL		NP
156-0765-02	N	Texas Instr	SN92570J	TTL		CR
156-0765-03	N		74S169	TTL	1-15	CR
156-0765-04	A	Texas Instr	SN74S169N3	TTL	1-15	CR
156-0765-05	X	Texas Instr	SN74S169JP4	TTL		DL
156-0766-00	A	∞Harris	HD1-74C32	CMOS	1-9	CR
		Natl Semic	MM74C32J/N			
156-0766-01	N		74C32	CMOS		CR
156-0766-02	A					MP
156-0767-00	N	Hitachi	HD14572UBC	CMOS	1-9	CR
		Motorola	MC14572UBCP/L			
156-0767-01	X		14572	CMOS		PP
156-0767-02	A	Motorola	MC14572UBCLD	CMOS	1-9	CR
156-0768-00	N	AMD	SN74LS194AN	TTL	1-20	CR
		Fairchild	74LS194APC			
		Texas Instr	SN74LS194AN			
156-0768-01	A	Fairchild	74LS194APCQR/DCQR	TTL	1-20	CR
		Texas Instr	SN74LS194ANP3/JP4			
156-0769-00	X	Signetics	N82S115F	Mem Sel Guide		CR
156-0769-01	X		82S115			NP
156-0770-00	N	Natl Semic	LF356H	Op Amp	3-4	CR
		∞Texas Instr	LF356L			
156-0770-01	X		LF356	Op Amp		NP
156-0770-02	N	Natl Semic	LF356H/A+	Op Amp	3-4	CR
156-0771-00	A	Fairchild	F10160DC	ECL	1-12	CS
		Motorola	MC10160L			
		Signetics	10160F			
		∞Texas Instr	SN10160J			
156-0771-01	A	Fairchild	F10160DCQR/PCQR	ECL	1-12	PP
		Motorola	MC10160P1/L1			
156-0772-00	U	Motorola	SCM3865P/L	MOS		NP
156-0773-00	U	Motorola	SCM3866P/L	MOS		NP
156-0774-00	U	Motorola	SCM3867P/L	MOS		NP
156-0775-00	U	Motorola	SCM3868P/L	MOS		NP
156-0776-00	U	Motorola	SCM3869P/L	MOS		LS
156-0777-00	U	Elec Arrays	P8308A-72B	MOS		NP
		Motorola	SCM44601L			
156-0778-00	U	Elec Arrays	P8308A-729	MOS		DL
		Motorola	SCM44602P/L			
156-0779-00	U	Elec Arrays	P8308A-730	MOS		DL
		Motorola	SCM44603P/L			
156-0780-00	U	Elec Arrays	P8308A-731	MOS		DL
156-0781-00	U	Elec Arrays	P8308A-732	MOS		DL
156-0782-00	U	Elec Arrays	P8308A-733	MOS		DL
156-0783-00	A	Natl Semic	LM399	Linear	3-1	CR
156-0783-01	N	Comp Concpts		Linear	3-1	CR
		Natl Semic	LM399H/A+			
156-0784-00	N	∞AMD	SN74LS163N	TTL	1-15	CR
		Signetics	N74LS163N/F			
		Texas Instr	SN74LS163AN/J			
156-0784-01	N		74LS163	TTL	1-15	CR
156-0784-02	A	Natl Semic	DM74LS163ANA+	TTL	1-15	CR
		Texas Instr	SN74LS163ANP3			
156-0785-00	N	Intersil	IM5610CJE/CPE	Mem Sel Guide	1-7	CR
		∞Natl Semic	DM8578N			
		∞Texas Instr	SN74S288J			
156-0786-00	X	Motorola	MC14070BCL	CMOS		NP
		Natl Semic	MM74C86N			
		RCA	CD4070BF			
156-0786-01	X		4070	CMOS		NP
156-0786-02	A	Motorola	MC14070BCLD	CMOS	1-9	CR
		Natl Semic	MM4070BJA+			
		RCA	CD4070BFX			
156-0786-00	X	Natl Semic	DM80L97N	TTL		DL
156-0787-01	X		80L97	TTL		DL
156-0788-00	X	AMD	SN74LS162AN/J	TTL		NP
		Motorola	SN74LS162AN/J			
		Signetics	N74LS162AN/F			
		Texas Instr	N74S162N/J			

** NEW DESIGN RECOMMENDATION FROM COMPONENT ENGINEERING:

A = Acceptable
N = Not Recommended
U = Undefined
X = Do Not use

INTEGRATED CIRCUIT PART NUMBER INDEX (CONT)

TEK PART NUMBER TO VENDOR NUMBER

PART NUMBER	** ND	VENDOR	VENDOR NO.	TYPE	* PAGE NO.	§§ ST
156-0788-01	A	Motorola	SN74LS162NDS/JDS	TTL	1-15	CR
		Natl Semic	DM74LS162NA+/JA+			
		Signetics	N74LS162NB/FB			
		Texas Instr	SN74LS162NP3/JP4			
156-0789-00	X	Motorola	SN74LS165N	TTL		NP
		Texas Instr	SN74LS165N			
156-0789-01	X		74LS165	TTL		NP
156-0789-02	A	Motorola	SN74LS165NDS/JDS	TTL	1-20	CR
		Texas Instr	SN74LS165NP3/JP3			
156-0790-00	N	Motorola	MC689P	MOS		CR
156-0791-00	U	Motorola	SCM3862L/P	MOS		LR
156-0792-00	U	Motorola	SCM3863L/P	MOS		NP
156-0793-00	X	Motorola	MC14012BCL	CMOS		NP
		RCA	CD4012BF			
156-0793-01	X		4012	CMOS		NP
156-0793-02	A	Motorola	MC14012BCLD	CMOS	1-9	CR
		RCA	CD4012BFX			
156-0794-00	U	Motorola	SCM3864L/P	MOS		NP
156-0795-00	X	Fairchild	4511BDC	CMOS		NP
		Motorola	MC14511BCL			
		∞RCA	CD4511BF			
156-0795-01	A	Fairchild	4511BDCQR	CMOS	1-9 & 10	CR
		Motorola	MC14511BCLD			
		RCA	CD4511BFX			
156-0795-02						SC
156-0796-00	N	RCA	CD4094BF	CMOS	1-10	CR
156-0796-01	A	Motorola	MC14094BCLD	CMOS	1-10	CR
		RCA	CD4094BFX			
156-0797-00	X	Intel	P4002-2	Mem Sel Guide		CR
156-0798-00	X	∞AMD	SN74LS153N/J	TTL		NP
		Fairchild	74LS153PC/DC			
		Signetics	N74LS153N/F			
		Texas Instr	SN74LS153N/J			
156-0798-01	X		74LS153	TTL		NP
156-0798-02	A	AMD	SN74LS153NB/JB	TTL	1-15	CR
		Fairchild	74LS153PCQR/DCQR			
		Motorola	SN74LS153NDS/JDS			
		Signetics	N74LS153NB/FB			
		Texas Instr	SN74LS153NP3/JP4			
156-0799-00	X	∞Mitel	SIL4017BF	CMOS		NP
		Motorola	MC14017BCL			
		Natl Semic	MM4017BCJ			
156-0799-01	A	Motorola	MC14017BCLD	CMOS	1-9	CR
		Natl Semic	CD4017BCJA+			
156-0800-00	X	Motorola	MC14042BCL	CMOS		NP
		RCA	CD4042BF			
156-0800-01	A	Motorola	MC14042BCLD	CMOS	1-10	CR
		RCA	CD4042BFX			
156-0801-00	X	Motorola	MC14015BCL	CMOS		NP
		RCA	CD4015BF			
156-0801-01	A	Motorola	MC14015BCLD	CMOS	1-10	CR
		RCA	CD4015BFX			
156-0802-00	X	Natl Semic	CD4016CJ	CMOS		OB
		RCA	CD4016AF			
156-0803-00	N	Intel	D4004	μP		CR
		Natl Semic	INS4004			
156-0804-00	X	Fairchild	74LS279PC/DC	TTL		NP
		Motorola	74LS279N/J			
		Texas Instr	SN74LS279N/J			
156-0804-01	X		74LS279	TTL		NP
156-0804-02	A	Fairchild	74LS279PCQR/DCQR	TTL	1-19	CR
		Motorola	SN74LS279NDS/JDS			
		Natl Semic	DM74LS279NA+/JA+			
		Texas Instr	SN74LS279NP3/JP4			
156-0804-03	X		74LS279	TTL		DL
156-0805-00	X	Texas Instr	SNC5401J	TTL		CM
156-0806-00	X	Texas Instr	SNC5402J	TTL		CM
156-0807-00	X	Texas Instr	SNC5404J	TTL		CM
156-0808-00	X	Texas Instr	SNC5406J	TTL		CM
156-0808-01	X		5406	TTL		DL
156-0809-00	X	Texas Instr	SNC5408J	TTL		CM
156-0810-00	X	Texas Instr	SNC5410J	TTL		CM
156-0811-00	X	Signetics	DM5411J/883B	TTL		CM
156-0812-00	X	Texas Instr	SNC5412J	TTL		CM
156-0813-00	X	Texas Instr	SNC5413J	TTL		CM
156-0814-00	X	Texas Instr	SNC5416J	TTL		CM
156-0815-00	X	Texas Instr	SNC5417J	TTL		CM
156-0816-00	X	Texas Instr	SNC5420J	TTL		CM
156-0817-00	X	Texas Instr	SNC5425J	TTL		CM
156-0818-00	X	Texas Instr	SNC5426J	TTL		CM
156-0819-00	X	Texas Instr	SNC5430J	TTL		CM
156-0820-00	X	Texas Instr	SNC5437J	TTL		CM
156-0821-00	X	Texas Instr	SNC5438J	TTL		CM
156-0822-00	X	Texas Instr	SNC5442AJ	TTL		CM
156-0823-00	X	Texas Instr	SNC5473J	TTL		CM
156-0824-00	X	Texas Instr	SNC5474J	TTL		CM
156-0825-00	X	Texas Instr	SNC5475J	TTL		CM
156-0826-00	X	Texas Instr	SNC5476J	TTL		CM
156-0827-00	X	Texas Instr	SNC5493J	TTL		CM
156-0828-00	X	Texas Instr	SNC54111J	TTL		CM
156-0829-00	X	Texas Instr	SNC54121J	TTL		CM
156-0830-00	X	Texas Instr	SNC54122J	TTL		CM
156-0831-00	X	Texas Instr	SNC54132J	TTL		CM
156-0832-00	X	Texas Instr	SNC54145J	TTL		CM
156-0833-00	X	Texas Instr	SNC54150J	TTL		CM
156-0834-00	X	Texas Instr	SNC54151J	TTL		CM
156-0835-00	X	Texas Instr	SNC54154J	TTL		CM
156-0836-00	X	Texas Instr	SNC54164	TTL		CM
156-0837-00	X	Texas Instr	SNC54175J	TTL		CM
156-0838-00	X	Texas Instr	SNC54177J	TTL		CM
156-0839-00	X	Texas Instr	SNC54180J	TTL		CM
156-0840-00	X	Texas Instr	SNC54193J	TTL		CM
156-0841-00	X	Texas Instr	SN54197J	TTL		CM
156-0842-00	N	Texas Instr	SNC54H87J	TTL		CM
156-0843-00	X	Texas Instr	SNC5400J	TTL		CM
156-0844-00	X	AMD	SN74LS161N	TTL		NP
		Texas Instr	SN74LS161AN			
156-0844-01	X		74LS161	TTL		NP
156-0844-02	A	Hitachi	HD74LS161P/C	TTL	1-15	CR
		Motorola	SN74LS161AND/JD			
		Texas Instr	SN74LS161ANP3/JP4			
156-0845-00	X	Natl Semic	DM8160N	TTL		CR
156-0845-01	X		DM8160	TTL		CR
156-0845-02	N	Natl Semic	DM8160N/A+			CR
156-0846-00	A	Motorola	MC7905CT	Linear	3-1	CR
		Natl Semic	LM7905CT			
		Silicon Geh	SG7905CP			
		Texas Instr	UA7905KC			
156-0847-00	A	Motorola	MC10145L	Mem Sel Guide	1-5	CR
156-0847-01	A	Motorola	SCM22690L145/ MC10145LDS	Mem Sel Guide	1-5	CR
156-0848-00	A	Motorola	MC10212P/L	ECL	1-12	CR
		∞Signetics	10212B			
156-0848-01	A	Motorola	MC10212P1/L1	ECL	1-12	PP
156-0849-00	A	Motorola	MC3446AP	TTL	1-16	CR
156-0850-00	X	Fairchild	4702BDC	CMOS		NP
		Harris	HD1-4702-9			
156-0850-01	X		34702	CMOS		NP
156-0850-02	A	Fairchild	4702BCDQR	CMOS	1-9	CR
		Harris	HD1-4702-B2118			
156-0851-00	N	Signetics	N8T09A	TTL	1-17	CR
156-0851-01	X		N8T09A	TTL		CR
156-0851-02	N	Signetics	N8T09ANB/FB	TTL	1-17	CR
156-0852-00	X	Motorola	SN74LS367AN/J	TTL		NP
		∞Signetics	N74LS367N/F			
		Texas Instr	SN74LS367N/J			
156-0852-01	X		74LS367	TTL		NP
156-0852-02	X	Motorola	SN74LS367NDS	TTL	1-16	CR
		Texas Instr	SN74LS367NP3			
156-0853-00	A	Motorola	MLM358P1	Op Amp	3-3	CR
		Natl Semic	LM358N			
		∞Signetics	NE532			
156-0853-01	U		LM532N	Op Amp	3-3	DL
156-0853-02	A	Motorola	LM358J	Op Amp	3-3	CR

* LACK OF ENTRY IN COLUMN INDICATES ITEM IS NOT LISTED IN MFR/TEK SECTION OF CATALOG. THIS INDICATES ITEM IS OBSOLETE, NOT RECOMMENDED FOR NEW DESIGN, OR OF LIMITED USE (SUCH AS SPECIALIZED CUSTOM MASK).

∞ NOT CURRENT VENDOR

§§ FOR STATUS CODES, SEE PAGE 4-39.

INTEGRATED CIRCUIT PART NUMBER INDEX (CONT)
TEK PART NUMBER TO VENDOR NUMBER

PART NUMBER	** ND	VENDOR	VENDOR NO.	TYPE	* PAGE NO.	§§ ST
156-0854-00	A	Natl Semic	LM308AN	Op Amp	3-4	CR
		Prec. Mono	OP-08FP			
		Silicon Gen	SG308AY			
156-0854-01	A	∞Motorola	LM308ANDS	Op Amp	3-4	CR
		Natl Semic	LM308AN/A+			
		Prec. Mono	PM308-027Z			
		Silicon Gen	SG308AY			
156-0855-00	U	Motorola	SCM3889P	MOS		CM
156-0856-00	U	Motorola	SCM3890P	MOS		LS
156-0857-00	U	Motorola	SCM3891P	MOS		LS
156-0858-00	A	Siliconix	DG201ACJ	Spec Funct	2-3	CR
156-0859-00	N	Monolithic	MMI6306-1J	Mem Sel Guide	1-7	CR
156-0860-00	A	Motorola	MC10116L	ECL	1-12	CR
		Signetics	10116F			
156-0860-01	X		10116	ECL		CR
156-0860-02	A	Motorola	MC10116P1	ECL	1-12	CR
		Signetics	10116N			
156-0861-00	N	∞Fairchild	74LS124	Spec Funct	2-3	CR
		∞Motorola	72LS124			
		Texas Instr	SN74LS629N/J			
156-0861-01	A	Texas Instr	SN74LS629NP3/JP4	Spec Funct	1-20 & 2-3	CR
156-0862-00	X	Mostek	MK4096K-11	Mem Sel Guide		CR
		Motorola	MCM6604L			
156-0862-01	N		MCM6604			CR
156-0862-02	N	Motorola	MCM6604L			DL
156-0863-00	A	Motorola	MC10181L	ECL	1-11	CR
156-0863-01	A	Motorola	MC10181L1	ECL	1-11	CR
		Signetics	10181FB			
156-0864-00	A	Motorola	MC14521BCL	CMOS	1-9	CR
156-0864-01	A	Motorola	MC14521BCLD	CMOS	1-9	CR
		∞Natl Semic	MM14521BCJA+			
156-0865-00	X	Fairchild	74LS273PC/DC	TTL		NP
		Signetics	N74LS273N/F			
		Texas Instr	SN74LS273N/J			
156-0865-01	X		74LS273	TTL		NP
156-0865-02	A	Fairchild	74LS273PCQR/DCQR	TTL	1-17	CR
		Motorola	SN74LS273NDS/JDS			
		Signetics	N74LS273NB/FB			
		Texas Instr	SN74LS273NP3/JP3			
156-0866-00	N	Fairchild	74LS133PC/DC	TTL	1-18	CR
		Motorola	SN74LS133N/J			
156-0866-01	N		74LS133	TTL	1-18	CR
156-0866-02	A	Fairchild	74LS133PCQR/DCQR	TTL	1-18	CR
		Motorola	SN74LS133NDS/JDS			
156-0867-00	X	Intel	D/C4009	Multi Funct		DL
		Natl Semic	INS4009P/J			
156-0868-00	X	Intel	D/C4008	CMOS		DL
		Natl Semic	INS4008P/J			
156-0869-00	N	∞Harris	HD1-74C151	CMOS	1-9	CR
		Natl Semic	MM74C151J			
156-0869-01	A	Natl Semic	MM74C151JA+	CMOS	1-9	CR
156-0870-00	A	Fairchild	F10010DC	ECL	1-11	CR
156-0870-01	A	Fairchild	SL81658	ECL	1-11	CR
156-0871-00	N	Signetics	2516N/CM2150N	Mem Sel Guide	1-4	OB
156-0872-00	A	Motorola	MC7912CT	Linear	3-1	CR
		Natl Semic	LM7912CT			
156-0872-01	A	Fairchild	UA7912UCQR	Linear	3-1	CR
		Motorola	MC7912CTD			
156-0872-02	A		7912	Linear	3-1	CR
156-0873-00	X	AMD	AM9130APC/ADC	Mem Sel Guide		CR
156-0873-01	X		9130A			DL
156-0873-02	X		9130A			CS
156-0874-00	N	Fairchild	74LS259PC	TTL	1-19	CR
		Motorola	SN74LS259N			
		Texas Instr	74LS259N			
156-0874-01	X		74LS259	TTL		NP
156-0874-02	A	Fairchild	74LS259PCQR/DCQR	TTL	1-19	CR
		Motorola	SN74LS259NDS/JDS			
		Texas Instr	SN74LS259NP3/JP4			
156-0875-00	X	Fairchild	74LS51PC/DC	TTL		NP
		Motorola	SN74LS51N/J			
		Natl Semic	DM74LS51N/J			
		Signetics	N74LS51N/F			
		Texas Instr	SN74LS51N/J			
156-0875-01	X		74LS51	TTL		NP
156-0875-02	A	Fairchild	74LS51DCQR/PCQR	TTL	1-18	CR
		Motorola	SN74LS51NDS/JDS			
		Natl Semic	DM74LS51NA+/JA+			
		Signetics	N74LS51NB/FB			
		Texas Instr	SN74LS51NP3/JP4			
156-0876-00	N	∞Harris	HD1-74C14	CMOS	1-9	CR
		Natl Semic	MM74C14			
156-0876-01	A	Natl Semic	MM74C14JA+	CMOS	1-9	CR
156-0876-02	X	Motorola	MC14584BCLD	CMOS		OB
		∞RCA	CD40106BFX			
156-0877-00	A	Intel	D8251A	Multi Funct	1-2	CR
156-0877-01	A	Intel	Q/P/D8251A	Multi Funct	1-2	CR
156-0877-02	X	AMD	D/P8251	Multi Funct		CR
		NEC America	μPD8251C/D			
156-0877-03						SC
156-0877-04	A	Intel	P/D8251A	Multi Funct	1-2	CR
156-0878-00	X	Motorola	MC1489L	TTL		NP
		Natl Semic	DS1489J			
156-0878-01	A	Motorola	MC1489LDS	TTL	1-16	CR
156-0878-02						SC
156-0879-00	X	Motorola	MC1488	TTL		NP
156-0879-01	A	Motorola	MC1488LDS	TTL	1-16	CR
156-0879-02						SC
156-0880-00	A	Fairchild	10231DC	ECL	1-11	CR
		Motorola	MC10231L			
156-0880-01	X		10231	ECL		DL
156-0880-02	A	Fairchild	SL81662	ECL	1-11	CR
		Motorola	SC22689P/L231			
156-0880-03	A		10231	ECL	1-11	CR
156-0880-04						SC
156-0881-00	N	Fairchild	95400DC	Mem Sel Guide	1-5	LR
156-0882-00	X	Gen Instr	RO-3-2513CGR-003	MOS		CR
156-0883-00	N	Natl Semic	DM74S196J	TTL	1-15	CR
		Texas Instr	74S196J			
156-0883-01	N	Motorola	SC22689P231	TTL	1-15	CR
156-0883-02	N	Natl Semic	DM74S196JA+	TTL	1-15	CR
156-0884-00	X	Digital Com	KEV11	Linear		DL
156-0885-02	U	Gen Elec	H11AX940	Opto		PP
156-0885-03	U			Opto		PP
156-0886-00	N	Harris	HD1-74C48	CMOS	1-9	CR
		Natl Semic	MM74C48J			
156-0886-01	X		74C48	CMOS		CR
156-0886-02	A	Natl	MM74C48JA+	CMOS	1-9	CR
156-0887-00	X	Harris	HM1-6562-9	Mem Sel Guide		LR
156-0887-01	X		HM6562			
156-0888-00	X	Natl Semic	DS75494N	TTL		NP
156-0888-01	X		75494	TTL		NP
156-0888-02	N	Natl Semic	DS75494N/A+	TTL	1-17	CR
156-0889-00	U	AMD	AM9208BDC	MOS		NP
156-0890-00	U	AMD	AM9208	MOS		NP
156-0891-00	U	AMD	AM9208BDC	MOS		CR
156-0892-00	U	AMD	P8303	MOS		CR
		Motorola	MCM68308			
156-0893-00	N	Fairchild	2102FPC/DC	Mem Sel Guide	1-6	NP
		∞Natl Semic	2102N			
		∞Signetics	N21F02B			
156-0893-01	N	Fairchild	2102FDC/PC	Mem Sel Guide	1-6	DL
		Natl Semic	2102AN			
156-0893-02						SC
156-0894-00	X	Harris	HD1-74C89	CMOS		DL
		Natl Semic	MM74C89J			
156-0895-00	X	∞Mitel	SIL4020BF	CMOS		NP
		Motorola	MC14020BCL			
		Natl Semic	MM4020BCJ			
156-0895-01	A	Motorola	MC14020BCLD	CMOS	1-9	CR
		RCA	CD4020BFX			

** NEW DESIGN RECOMMENDATION FROM COMPONENT ENGINEERING:

A = Acceptable
N = Not Recommended
U = Undefined
X = Do Not Use

INTEGRATED CIRCUIT PART NUMBER INDEX (CONT)

TEK PART NUMBER TO VENDOR NUMBER

PART NUMBER	** ND	VENDOR	VENDOR NO.	TYPE	* PAGE NO.	§§ ST
156-0896-00	X	Motorola	MC14553BCL	CMOS		NP
156-0896-01	A	Motorola	MC14553BCLD	CMOS	1-9	CR
156-0897-00	X	Motorola	MC14508BCL	CMOS		OB
156-0898-00	X	Fairchild	4556BDC	CMOS		NP
		Motorola	MC14556BCL			
		RCA	CD4556BF			
156-0898-01	A	Fairchild	4556BDCQR	CMOS	1-9	CR
		Motorola	MC14556BCLD			
		RCA	CD4556BFX			
156-0899-00	U	Gen Instr	8316A-1303	MOS		CR
156-0899-01	U		8316A-1303	MOS		CR
156-0900-00	U	Gen Instr	8316A-4304	MOS		CR
156-0900-01	U		8316A-4304	MOS		CR
156-0901-00	A	RCA	CA3060E	Array	3-2 & 5	CR
156-0902-00	A	Motorola	MC1355P	Linear	3-1	CR
156-0903-00	X	∞Intel	D3624-4	Mem Sel Guide		LR
156-0904-00	A	Harris	HAO-0911-6	Op Amp		CR
		Signetics	XNE5534CK			
156-0905-00	N	Fairchild	93427DC	Mem Sel Guide	1-7	CR
156-0906-00	A	Motorola	MC1357	Linear	3-1	CR
156-0907-00		Motorola	4N26			CR
		Texas Instr	4N26			
156-0908-00	A	Intersil	ITS80006	Spec Funct	2-2	CR
156-0909-00	A	Intersil	ITS80007	Spec Funct	2-2	CR
156-0910-00	X	Fairchild	SL68104	TTL		NP
		Motorola	SN74LS390N/J			
		Texas Instr	SN74LS390N/J			
156-0910-01	X		74LS390	TTL		NP
156-0910-02	A	Fairchild	74LS390PCQR/DCQR	TTL	1-15	CR
		Motorola	SN74LS390NDS/JDS			
		Texas Instr	SN74LS390NP3/JP4			
156-0911-00	U	Natl Semic	LF13202N	CMOS		DL
156-0912-00	A	RCA	CA3080E	Op Amp	3-5	OB
156-0912-01	A	RCA	CA3080EX	Op Amp	3-5	CR
156-0913-00	X	Fairchild	74LS377PC/DC	TTL		NP
		Motorola	SN74LS377N/J			
		Signetics	N74LS377N/F			
		Texas Instr	SN74LS377N/J			
156-0913-01	X		74LS377	TTL		NP
156-0913-02	A	Motorola	SN74LS377NDS/LDS	TTL	1-17	CR
		Signetics	N74LS377NB/FB			
		Texas Instr	SN74LS377NP3/JP4			
156-0914-00	X	∞AMD	SN74LS240N/J	TTL		NP
		Fairchild	74LS240PC/DC			
		Monolithic	74LS240N/J			
		Motorola	SN74LS240N/J			
		Signetics	N74LS240N/F			
		Texas Instr	SN74LS240N/J			
156-0914-01	X		74LS240	TTL		NP
156-0914-02	A	Fairchild	74SL240PCQR/DCQR	TTL	1-14	CR
		Monolithic	74LS240N/J			
		Motorola	SN74LS240NDS/JDS			
		Signetics	N74LS240NB/FB			
		Texas Instr	SN74LS240NP3/JP4			
156-0914-03	N	∞AMD	74LS240N/J	TTL		CR
		Signetics	CD2046N/F-03			
156-0915-00	X	Texas Instr	SN74LS280N	TTL		NP
156-0915-01	X		74LS280	TTL		NP
156-0915-02	A	Texas Instr	SN74LS280N3/J4	TTL	1-19	CR
156-0916-00	X	AMD	DM81LS97N	TTL		NP
		Natl Semic	DM81LS97N			
156-0916-01	X		81LS97	TTL		NP
156-0916-02	A	AMD	AM81LS97NB/JB	TTL	1-14	CR
		Natl Semic	DM81LS97NA+/JA+			
156-0917-00	N	Signetics	N8881N	Linear		CR
156-0918-00	A	Natl Semic	LM321AH/A+	Op Amp	3-4	CR
156-0919-00	N	Raytheon	RC8271DD	TTL		PP
		∞Signetics	N8271B			
156-0920-00	A	Fairchild	10161DC	ECL	1-11	CS
		Motorola	MD10161L			
156-0920-01	A	Fairchild	F10161DCQR/PC	ECL	1-11	CR
		Motorola	MC10161P1/L1			
156-0921-00	A	RCA	CA3140S	Op Amp	3-4	CR
156-0921-01	A	DCA Reliab		Op Amp	3-4	CR
		RCA				

PART NUMBER	** ND	VENDOR	VENDOR NO.	TYPE	* PAGE NO.	§§ ST
156-0921-02	A	RCA	CA3140TX	Op Amp	3-4	CR
156-0922-00	N	∞Fairchild	74H05PC/DC	TTL		CR
		Natl Semic	DM74H05N/J			
		Signetics	N74H05N/F			
		Texas Instr	SN74H05N/J			
156-0922-01	N		74H05	TTL		CR
156-0922-02	N		74H05	TTL	1-14	MP
156-0923-00	A	Motorola	MC1697P	ECL	1-12	LS
156-0924-00	X	Texas Instr	TMS4051JL	Mem Sel Guide		DL
156-0925-00	X	∞Fairchild	4085BDC	CMOS		OB
		RCA	CD4085BF			
156-0925-01	X	Fairchild	4085BDC	CMOS		LR
156-0925-02	X	RCA	CD4085BFX	CMOS		OB
156-0926-00	A	Fairchild	μA7824UC	Linear	3-1	CR
		Motorola	MC7824CT			
		∞Natl Semic	LM340T-24			
		∞Signetics	μA78HV24CU			
156-0927-00	A	Motorola	MC3410CL	Spec Funct	2-2	CR
156-0927-01	N		MC3410	Spec Funct	2-2	DL
156-0927-02	X		MC3410CLD	Spec Funct		CR
156-0927-03						PP
156-0928-00	N	AMD	AM74LS243N/J	TTL	1-14 & 16	CR
		Motorola	SN74LS243N/J			
		Texas Instr	SN74LS243N/J			
156-0928-01	N		74LS243	TTL	1-14 & 16	NP
156-0928-02	A	AMD	SN74LS243NB/JB	TTL	1-14 & 16	CR
		Motorola	SN74LS243NDS/JDS			
		Texas Instr	SN74LS243NP3/JP4			
156-0929-00	N	Texas Instr	SN74159	TTL	1-16	CR
156-0930-00	N	Motorola	SC75012P	Linear	3-1	CR
156-0931-00	N	Harris	HD1-74C175	CMOS	1-9	CR
		Natl Semic	MM74C175J			
156-0931-01	A	Natl Semic	MM74C175JA+	CMOS	1-9	CR
156-0932-00	U	Natl Semic	MM5243	MOS		LR
156-0933-00	A	∞Exar	3524CN	Linear	3-1	CR
		∞RCA	CA3524G			
		Silicon Gen	SG9257			
		∞Texas Instr	SG3524J			
156-0933-01	A	Silicon Gen	SG9976	Linear	3-1	CR
156-0934-00	A	Texas Instr	SN75152	TTL	1-16	CM
156-0934-01	X		74152	TTL		CM
156-0935-00	N	T xas Instr	TMS9900J	Multi Funct	1-2	CR
156-0935-01	N	Texas Instr	MP9534JL	Multi Funct		CR
156-0935-02	N		9900	Multi Funct	1-2	CR
156-0935-03	N	Texas Instr	TMS9900-40J	Multi Funct	1-2	CR
156-0936-00	A	RCA	CA3080AS/5	Op Amp	3-5	CR
156-0937-00	A	Analog Dev	AD580LH	Linear	3-1	CR
156-0938-00	N	Harris	HD1-74C10	CMOS	1-9	PP
		Natl S mic	MM74C10J			
156-0938-01	A	Natl Semic	MM74C10NA+/JA+	CMOS	1-9	CR
156-0939-00	X	∞AMD	93L28PC	TTL		L
		Fairchild	93L28PC/DC			
156-0940-00	X	Intersil	52S046	TTL		LR
156-0941-00	N	Harris	HD1-74C00	CMOS	1-9	PP
		Natl Semic	MM74C00J			
156-0941-01	A	Natl Semic	MM74C00JA+/NA+	CMOS	1-9	CR
156-0942-00	X		MC1391P			DL
156-0943-00	N	Elec Mem	4804A	Mem Sel Guide	1-6	LS
156-0943-01	N	EMM	EMM4804A	Mem Sel Guide	1-6	CS
156-0944-00	X	Motorola	MC8505P	MOS		DL
157-0945-00	N	∞AMD	AM8224D	Multi Funct	1-2 & 17	CR
		Intel	D8224			
		Natl Semic	DP8224J			
		NEC Micro	μPB8224D			
156-0945-01	N	∞AMD	AM8224DCB	Multi Funct	1-2	CR
		Intel	QD8224			
156-0946-00	A	Natl Semic	MM5321N	MOS	1-13	CR
156-0947-00	N	AMD	AM8228D	Multi Funct	1-2	CR
		Intel	D8228			
		∞Natl Semic	DP8228J			
		∞NEC Micro	μPB8228D			

* LACK OF ENTRY IN COLUMN INDICATES ITEM IS NOT LISTED IN MFR/TEK SECTION OF CATALOG. THIS INDICATES ITEM IS OBSOLETE, NOT RECOMMENDED FOR NEW DESIGN, OR OF LIMITED USE (SUCH AS SPECIALIZED CUSTOM MASK).

∞ NOT CURRENT VENDOR.

§§ FOR STATUS CODES, SEE PAGE 4-39.

INTEGRATED CIRCUIT PART NUMBER INDEX (CONT)

TEK PART NUMBER TO VENDOR NUMBER

PART NUMBER	** ND	VENDOR	VENDOR NO.	TYPE	* PAGE NO.	§§ ST
156-0947-01	X		8228	Multi Funct		DL
156-0947-02	N	Intel	D8228-S4241	Multi Funct	1-2	CS
156-0948-00	X	Fairchild	74S175DC	TTL		NP
		Texas Instr	SN74S175J			
156-0948-01	X		74S175	TTL		NP
156-0948-02	A	Fairchild	74S175DCQR	TTL	1-17	CR
		Texas Instr	SN74S175J4			
156-0949-00	X	Monolithic	67110D	TTL		LS
156-0950-00	A	Motorola	MCM66750	Mem Sel Guide	1-4	CR
156-0950-01	X		6575			DL
156-0950-02	X	Motorola	MCM66750PDS/LDS			CR
156-0951-00	X	∞Motorola	SN74LS173N/J	TTL		NP
		Natl Semic	DM74LS173N/J			
		Texas Instr	SN74LS173N/J			
156-0951-01	X		74LS173	TTL		NP
156-0951-02	A	Motorola	SN74LS173NDS/JDS	TTL	1-20	CR
		Natl Semic	DM74LS173NA+/JA+			
		Texas Instr	SN74LS173N3/J4			
156-0952-00	X	Motorola	MCM6581L	Mem Sel Guide		OB
156-0952-01	X		MCM6581			DL
156-0953-00	X	Fairchild	74LS85PC/DC	TTL		NP
		Motorola	SN74LS85N/J			
		Signetics	N74LS85N/F			
		Texas Instr	SN74LS85N/J			
156-0953-01	X		74LS85	TTL		NP
156-0953-02	A	Fairchild	SL82266	TTL	1-14	CR
		Motorola	SN74LS85NDS/JDS			
		Natl Semic	DM74LS85NA+/JA+			
		Signetics	N74LS85NB/FB			
		Texas Instr	SN74LS85NP3/JP4			
156-0953-03	N	Motorola	SN74LS85J	TTL		CM
		Natl Semic	DM74LS85J			
		Texas Instr	SN74LS85J			
156-0954-00	N	Intel	8080AC	Multi Funct	1-2	CR
		Natl Semic	8080AD			
156-0954-01	X		8080A	Multi Funct		DL
156-0955-00	X	∞AMD	SN74LS241N/J	TTL		NP
		Fairchild	74LS241PC/DC			
		Monolithic	74LS241N/J			
		Signetics	N74LS241N/F			
		Texas Instr	SN74LS241N/J			
156-0955-01	X		74LS241	TTL		NP
156-0955-02	A	AMD	DM74LS241NB/JB	TTL	1-14	CR
		Fairchild	74LS241PCQR/DCQR			
		Monolithic	SN74LS241N/J			
		Motorola	SN74LS241NDS/JDS			
		Signetics	N74LS241NB/JB			
		Texas Instr	SN74LS241NP3/JP4			
156-0956-00	X	AMD	SN74LS244N/J	TTL		NP
		Monolithic	SN74LS244N/J			
		Motorola	SN74LS244N/J			
		Signetics	SN74LS244N/F			
		Texas Instr	SN74LS244N/J			
156-0956-01	X		74LS244	TTL		NP
156-0956-02	A	AMD	SN74LS244NB/JB	TTL	1-14	CR
		Monolithic	SN74LS244N/J			
		Motorola	SN74LS244NDS/JDS			
		Signetics	N74LS244NB/FB			
		Texas Instr	SN74LS244NP3/JP4			
156-0956-03	X		74LS244	TTL		DL
156-0956-04	N	AMD	N74LS244NB/JB	TTL		CR
		Signetics	N74LS244NB/FB			
156-0957-00	X	∞AMD	SN74LS169N	TTL		NP
		Natl Semic	DM74LS169N/J			
156-0957-01	A	Natl Semic	DM74LS169NA+/JA+	TTL	1-15	CR
156-0958-00	A	Analog Dev	AD5001B	Spec Funct	2-2	CR
		Burr-Brown	2D131			
156-0958-01	A	Burr-Brown	2D131			CR
156-0959-00	A	Burr-Brown	DAC80-CBI-V	Spec Funct	2-2	CR
156-0959-01	A		DAC-80-CBI-V	Spec Funct	2-2	PP
156-0960-00	N	∞Natl Semic	74S471J	Mem Sel Guide	1-7	CR
		Texas Instr	TBP18S22			
156-0961-00	N	Motorola	MC14093BCL	CMOS	1-9	CR
		RCA	CD4093BF			
156-0961-01	X		MC4093	CMOS		DL
156-0961-02	A	Motorola	MC14093BLDS	CMOS	1-9	CR
		RCA	CD4093BFX			
156-0961-03	X		4093B	CMOS		DL
156-0961-04						SC
156-0962-00	N	Intel	8212	Multi Funct	1-2	CR
156-0963-00	N	Intel	8214	Multi Funct	1-2	PP
156-0964-00	U	Fairchild	FSC35392	MOS		DL
156-0965-00	N	Intel	D3242/S6624	Multi Funct	1-2	CR
		Motorola	MC3242AL			
156-0965-01	U	Intel	3242	Multi Funct		DL
156-0965-02	U	Intel	D3242-S6625	Multi Funct		CR
156-0966-00	X	Texas Instr	SN74S260N	TTL		NP
156-0966-01	A	Texas Instr	SN74S260NP3	TTL	1-18	CR
156-0967-00	A	Analog Dev	AD561J	Spec Funct	2-2	CR
156-0968-00	A	∞Intel	2117-3	Mem Sel Guide	1-4	CR
		ITT	4116-3J/3D			
		Mostek	MK4116J-3			
		Nippon Elec	416-2			
156-0968-01	X	Mostek	MK4116P-3	Mem Sel Guide		NP
156-0968-02	N	Eaton-Pacifc		Mem Sel Guide	1-4	CR
		Microtest				
156-0969-00	N	Fairchild	F9401DC	Mem Sel Guide		CR
156-0969-01	X	Fairchild	9401			DL
156-0969-02	N	Fairchild	F9401DCQR			CR
156-0970-00	X	Fairchild	74LS26PC/DC	TTL		NP
		Motorola	SN74LS26N/J			
		Signetics	N74LS26N/F			
		Texas Instr	SN74LS26N/J			
156-0970-03	A	Fairchild	74LS26PCQR/DCQR	TTL	1-18	CR
		Signetics	N74LS26NB/FB			
		Texas Instr	SN74LS26NP3/JP4			
156-0971-00	X	Intel	P/D3604L-6	Mem Sel Guide		DL
156-0972-00	N	∞Intel	2104A-4	Mem Sel Guide	1-4	CS
		Mostek	MK4027-4			
156-0972-01	X	Mostek	MK4027-4			DL
156-0972-02	U	Intel	2104A-4			DL
156-0972-03	U	Eaton-Pacifc				NP
		Geo Reliab				
		Intel	INT2104A-4			
		Microtest				
		Mostek	MK4027-4			
156-0972-04	X	Intel	2104A-4			DL
156-0972-05	U	Intel	2104A-4			CS
156-0973-00	N	∞Arrow Elect	N82S2708F	Mem Sel Guide	1-7	CR
		∞Hamilton-Av	N82S2708F			
		Signetics	N82S2708F			
156-0974-00	U		UA741MJG	Op Amp		DL
156-0975-00	X	AMD	SN74LS299N/J	TTL		NP
		Texas Instr	SN74LS299N/J			
156-0975-01	N		74LS299	TTL		DL
156-0975-02	A	AMD	DM74LS299N-B/J-B	TTL	1-20	CR
		Texas Instr	SN74LS299NP3/JP4			
156-0975-03	N	AMD	SN74LS299NB/JB	TTL	1-20	CR
		Hitachi	74LS299P/C			
156-0976-00	A	Signetics	N82S181F	Mem Sel Guide	1-7	CR
156-0977-00	A	Harris	HA2-2655-5	Op Amp	3-3	CR
156-0978-00	U	Motorola	SCM37226P/L	MOS		NP
156-0979-00	U	Motorola	SCM37227P/L	MOS		NP
156-0980-00	U	Motorola	SCM37228P/L	MOS		NP
156-0981-00	U	Motorola	SCM37229P/L	MOS		NP
156-0982-00	X	∞AMD	SN74LS374JTB	TTL		NP
		Fairchild	74LS374PC/DC			
		Monolithic	SN74LS374N/J			
		Signetics	N74LS374N/F			
		Texas Instr	SN74LS374N/J			
156-0982-01	X	Signetics	74LS374	TTL		NP
156-0982-02	N	∞Fairchild	74LS374PC/DCQR	TTL		CR
		∞Monolithic	SN74LS374N/J			
		∞Natl Semic	DM74LS374NA+/JA+			
		Signetics	N74LS374NB/FB			
		Texas Instr	SN74LS374N3/J4			

** NEW DESIGN RECOMMENDATION FROM COMPONENT ENGINEERING:

A = Acceptable
N = Not Recommended
U = Undefined
X = Do Not Use

INTEGRATED CIRCUIT PART NUMBER INDEX (CONT)

TEK PART NUMBER TO VENDOR NUMBER

PART NUMBER	ND**	VENDOR	VENDOR NO.	TYPE	PAGE NO.*	ST§§
156-0982-03	A	Fairchild	74LS374PCQR/DCQR	TTL	1-17	CR
		Monolithic	SN74LS374N/J			
		Natl Semic	DM74LS374NA+/JA+			
		Signetics	N74LS374NB/FB			
		Texas Instr	SN74LS374N3/J4			
156-0983-00	A	Mostek	MK3880J-4	Multi Funct	1-2	CR
		Zilog	Z-80A			
156-0983-01	A	Mostek	MK3880P-4/J-4	Multi Funct		CR
156-0983-02	A	Mostek	3880N-4	Multi Funct	1-2	CR
		Zilog	Z-80A-CPU-PS			
156-0983-03						CR
156-0983-04						SC
156-0984-00	X	AMD	27LS00DC	Mem Sel Guide		CS
		∞Signetics	N82S116F			
156-0984-01	X	Signetics	N82S116F			DL
156-0985-00	X	Fairchild	74LS260PC/DC	TTL		NP
		Motorola	SN74LS260N/J			
		Signetics	N74LS260N/F			
156-0985-01	A	Fairchild	74LS260PCQR/DCQR	TTL	1-18	CR
		Motorola	SN74LS260NDS/JDS			
		Signetics	N74LS260FB/NB			
156-0985-02	X		74LS260	TTL		DL
156-0986-00	X	Signetics	2650A-I	Multi Funct		NP
156-0986-01	X	Signetics	2650A-I	Multi Funct		NP
156-0986-02	X	Signetics	2650-A-1-I	Multi Funct		CR
156-0987-00	N	AMD	9140BDC	Mem Sel Guide	1-6	CR
156-0987-01	N	AMD	9140BDC	Mem Sel Guide	1-6	PP
156-0987-02	N	AMD	9140BDC	Mem Sel Guide	1-6	CR
156-0988-00	X	Natl Semic	LM340T-15	Linear		OT
		∞Signetics	μA78HV15CU			
		Silicon Gen	SG7815ACP			
156-0989-00	X	Fairchild	74LS670PC/DC	TTL		NP
		Natl Semic	DM74LS670N/J			
		∞Texas Instr	SN74LS670N/J			
156-0989-01	X		74LS670N	TTL		NP
156-0989-02	A	Fairchild	74LS670PCQR/DCQR	TTL	1-19	CR
		Motorola	SN74LS670NDS/JDS			
		Natl Semic	DM74LS670NA+/JA+			
		Texas Instr	SN74LS670NP3/JP4			
156-0990-00	X	Fairchild	74LS136PC	TTL		NP
		Texas Instr	SN74LS136N			
156-0990-01	A	Fairchild	74LS136PCQR/DCQR	TTL	1-18	CR
		Texas Instr	SN74LS136NP3/JP4			
156-0990-02						SC
156-0991-00	A	Fairchild	μA78L05AWC	Linear	3-1	CR
		Motorola	MC78L05ACPD			
156-0991-01	A	Fairchild	μA78L05AWCQR	Linear	3-1	CR
		Motorola	MC78L05ACPD			
156-0992-00	N	Intel	D3245	TTL	1-16	CR
156-0993-00	N	Texas Instr	SN74LS362N	Multi Funct	1-2 & 16	PP
156-0993-01	A	Texas Instr	SN74LS362J4	Multi Funct	1-2 & 16	CR
156-0993-02	N	Texas Instr	TIM9904-40J	Multi Funct	1-2 & 16	CR
156-0994-00	X	Fairchild	74LS151PC/DC	TTL		NP
		Hitachi	HD74LS151P/C			
		Motorola	74LS151N/J			
		Texas Instr	SN74LS151N/J			
156-0994-01	X		74LS151	TTL		NP
156-0994-02	A	Fairchild	74LS151PCQR/DCQR	TTL	1-15	CR
		Hitachi	HD74LS151P/C			
		Motorola	SN74LS151NDS/JDS			
		Texas Instr	SN74LS151NP3/JP4			
156-0995-00	N	Signetics	N8T16N/F	TTL	1-17	OT
156-0996-00	N	AMD	N8T26AF	TTL	1-17	CR
		Motorola	MC6880/8T26L			
		Signetics	8T26AF			
156-0996-01	A	AMD	N8T26ADCB	TTL	1-17	CR
		Motorola	MC6880ALD/8T26ALD			
		Signetics	N8T26AFB			
156-0997-00	N	Signetics	N8T15A	TTL	1-17	OT
156-0998-00	N	Motorola	MC6887/MC8T97L	TTL	1-14	CR
156-0998-01	A	Motorola	8T97LDS	TTL	1-14	CR
		Signetics	N8T97FB			
156-0999-00	N	Signetics	N8T98F	TTL	1-14	CR
		Motorola	MC6888/MC8T98L			
156-0999-01	A	Motorola	8T98LDS	TTL	1-14	CR
		Signetics	N8T98FB			
156-1000-00	X	NEC Micro	0411D-2	Mem Sel Guide		OT
156-1001-00	U	Texas Instr	ZA3240/TMS4732JL	MOS		CR
156-1002-00	U	∞Elec Arrays	EA8332A-PC/377A	MOS		CS
		Texas Instr	TMS4732/AZ3241			
156-1003-00	U	Texas Instr	TMS/AZ3242	MOS		CS
156-1004-00	U	∞Elec Arrays	EA8332A-PC/378A	MOS		CS
		Texas Instr	TMS4732/AZ3243			
156-1005-00	U	Texas Instr	TMS4732	MOS		NP
156-1006-00	U	Texas Instr	TMS4732	MOS		NP
156-1007-00	U	Texas Instr	TMS4732	MOS		NP
156-1008-00	U	Texas Instr	TMS4732	MOS		NP
156-1009-00	U	Texas Instr	TMS4732JL/ZA3239	MOS		CS
156-1010-00	U	∞Elec Arrays	EA8332A-PC/379A	MOS		CS
		Texas Instr	TMS4732/ZA3238			
156-1010-01						SC
156-1011-00	U	Texas Instr	TMS4732	MOS		DL
156-1012-00	U	∞Elec Arrays	EA8332A-PC/380A	MOS		CS
		Texas Instr	TMS4732/AZ3238			
156-1013-00	A	AMD	S6852E	Multi Funct	1-2	CR
		Motorola	SC67702L			
156-1014-00	X	Texas Instr	SN74S280N/J	TTL		NP
156-1014-01	N	Texas Instr	SN74S280NP3/JP4	TTL	1-19	CR
156-1015-00	N	Signetics	N74109B	TTL	1017	CR
		Texas Instr	SN74109N			
156-1016-00	A	Natl Semic	LM3900N	Op Amp	3-3	CR
156-1017-00	A	AMD	AM2716	Mem Sel Guide	1-7	CR
		Fujitsu	MBM2716			
		Intel	D2716			
		∞Natl Semic	MM2716Q			
		∞Synertek	SYC2716			
156-1018-00	A	Motorola	MC6885/MC8T95L	TTL	1-14	CR
		Signetics	8T95F			
156-1018-01	X	Motorola	MC8T95LDS	TTL		DL
156-1019-00	X	Fairchild	10210DC	ECL		NP
		Motorola	MC10210P/L			
156-1019-01	X		10210	ECL		DL
156-1019-02	A	Fairchild	SL81663	ECL	1-12	CR
		Motorola	SC22689P210			
156-1019-03		Motorola	MC10210LD/PD			MP
156-1020-00	A	Motorola	MC10134P/L	ECL	1-11	CR
156-1021-00	A	Motorola	MC1097P/L	ECL	1-12	CR
156-1021-01	A	Motorola	SC22689P197	ECL	1-12	CR
156-1021-02						SC
156-1022-00	A	Motorola	MC10165L	ECL	1-12	PP
		Signetics	N10165F			
156-1022-01	A	Motorola	SC22689L165	ECL	1-12	CR
		Signetics	10165FB			
156-1023-00	X	Fairchild	10166DC	ECL		NP
		Motorola	MC10166L			
156-1023-01	A	Fairchild	10166DCQR	ECL	1-11	CR
		Motorola	SC22689L166			
156-1024-00	A	Burr-Brown	DAC60-12	Spec Funct	2-2	CR
		Datel-Inters	DAC660			
156-1024-01	X		DAC60-12	Spec Funct		DL
156-1025-00	N	∞AMD	SN74LS242N/J	TTL	1-14 & 16	CR
		Motorola	SN74LS242N/J			
		Texas Instr	SN74LS242N/J			
156-1025-01	N		74LS242	TTL	1-14 & 16	CR
156-1025-02	A	AMD	SN74LS242NB/JB	TTL	1-14 & 16	CR
		Motorola	SN74LS242NDS/JDS			
		Texas Instr	SN74LS242NP3/JP4			
156-1026-00	X	Natl Semic	DM74LS154N	TTL		NP
		Signetics	N74LS154N			
156-1026-01	X		74LS154	TTL		NP
156-1026-02	A	Natl Semic	DM74LS154NA+	TTL	1-16	CR
		Texas Instr	SN74LS154N/P3			
156-1026-03	N		74LS154	TTL		DL
156-1027-00	N	Mostek	MK4027J-3	Mem Sel Guide	1-4	CR

* LACK OF ENTRY IN COLUMN INDICATES ITEM IS NOT LISTED IN MFR/TEK SECTION OF CATALOG. THIS INDICATES ITEM IS OBSOLETE, NOT RECOMMENDED FOR NEW DESIGN, OR OF LIMITED USE (SUCH AS SPECIALIZED CUSTOM MASK).

∞ NOT CURRENT VENDOR

§§ FOR STATUS CODES, SEE PAGE 4-39.

INTEGRATED CIRCUIT PART NUMBER INDEX (CONT)

TEK PART NUMBER TO VENDOR NUMBER

PART NUMBER	** ND	VENDOR	VENDOR NO.	TYPE	* PAGE NO.	§§ ST
156-1027-01	N	Mostek	MK4027J-3			CR
156-1027-02	N		MK4027J-3			CR
156-1028-00	A	AMD	SM9114BDC	Mem Sel Guide	1-6	CR
		Intel	2114/2114AL-4			
156-1028-01	A	Intel	2114AL-4	Mem Sel Guide	1-6	LR
156-1028-02	U		2114			NP
156-1029-00	N	AMD	AM2909ADC	Multi Funct	1-2	CR
		Motorola	MC2909LC			
		Natl Semic	IDM2909AJC			
156-1029-01	A	AMD	AM2909ADC	Multi Funct	1-2	PP
		Natl Semic	IDM2909AJC			
156-1030-00	A	Fairchild	F100141FC	ECL	1-12	CR
156-1030-01	X		100141	ECL		DL
156-1030-02	A		100141	ECL	1-12	CR
156-1030-03						PP
156-1031-00	A	∞Fairchild	100131FC	ECL	1-11	CR
		Hitachi	HD100131F			
156-1031-01	X		F100131FCQR	ECL		DL
156-1031-02	X	Fairchild	F100131FCQR	ECL		DL
156-1031-03	N		100131	ECL		CR
156-1031-04						PP
156-1032-00	A	Fairchild	F100102FC	ECL	1-12	CR
156-1032-01	X	Fairchild	F100102FCQR	ECL		DL
156-1032-02	A		100102	ECL	1-12	CR
156-1032-03						PP
156-1032-04						MP
156-1033-00	A	Fairchild	F100114FC	ECL	1-12	CR
156-1033-01	X		10014	ECL		DL
156-1033-02	X	Fairchild	F100114FCQR	ECL		DL
156-1033-03	A		100114	ECL		CR
156-1034-00	A	Fairchild	F100101FC	ECL	1-12	CR
156-1034-01	A	Fairchild	F100101FCQR	ECL	1-12	PP
156-1034-02	A		100101	ECL	1-12	CR
156-1034-03						PP
156-1035-00	X	Fairchild	10405DC	Mem Sel Guide		DL
		Motorola	MCM10147L			
156-1035-01	N	Fairchild	10405DC	Mem Sel Guide	1-5	CR
		Motorola	SCM22690L147/ MC10147LDS			
156-1036-00	A	Intel	D8253-5	Multi Funct	1-2	CR
		NEC Micro	UPD8253D-5			
156-1036-01	A	Intel	QD8253	Multi Funct	1-2	CR
156-1037-00	A	Motorola	MCM10139	Mem Sel Guide	1-7	CR
		∞Signetics	10139F			
156-1038-00	A	Fairchild	F10016DC	ECL	1-11	CR
156-1038-01	A	Fairchild	SL81660	ECL	1-11	CR
156-1039-00	N	AMD	AM2857PC	MOS	1-13	CR
156-1039-01	N		AM2857	MOS	1-13	CR
156-1039-02	X		AM2857	MOS		NP
156-1040-00	N	Texas Instr	SN74S51N/J	TTL	1-18	CR
156-1040-01	N		74S51	TTL	1-18	CR
156-1040-02	N	Texas Instr	SN74S51NP3/JP4	TTL	1-18	CR
156-1041-00	X	Signetics	74S85F	TTL		NP
		Texas Instr	SN74S85J			
156-1041-01	X		74S85	TTL		NP
156-1041-02	A	Signetics	N74S85FB	TTL	1-14	CR
		Texas Instr	SN74S85JP4			
156-1042-00	N	AMD	AM9130BDC	Mem Sel Guide	1-6	CR
156-1042-01	X		9130B			DL
156-1043-00	A	AMD	AM2901BDC	Multi Funct	1-2	CR
		∞Motorola	MC2901ALD			
		Natl Semic	IDM2901A-1JC			
156-1043-01	N	AMD	AM2901BDC	Multi Funct		PP
		∞Natl Semic	IDM2901A-2DC			
156-1043-02	N	AMD	AM2901DCB	Multi Funct	1-2	CR
		∞Motorola	MC2901ALD			
156-1043-03	A	AMD	AM2901BDCB	Multi Funct	1-2	PP
156-1044-00	N	AMD	SN74S161J	TTL	1-15	CR
		∞Fairchild	F93S16DC			
156-1044-01	A	AMD	AM74S161JTB	TTL	1-15	CR
		Fairchild	F93S16DCQR			
156-1045-00	X	Fairchild	74LS298PC/DC	TTL		NP
		Texas Instr	SN74LS298N/J			
156-1045-01	A	Fairchild	74LS298PCQR/DCQR	TTL	1-15	CR
		Motorola	SN74LS298NDS/JDS			
		Texas Instr	SN74LS298NP3/JP4			
156-1046-00	X	Natl Semic	DM745374J	TTL		NP
		Texas Instr	SN74S374J			
156-1046-01	X		74S374	TTL		NP
156-1046-02	A	∞AMD	74S374JTB	TTL	1-17	CR
		Texas Instr	SN74S374JP4			
156-1047-00	N	Harris	HD16600-5	TTL		CR
156-1047-01	X		6605	TTL		DL
156-1048-00	N	Monolithic	SN74S182J	TTL	1-19	CR
		Signetics	N74S182F			
		Texas Instr	SN74S182J			
156-1048-01	N		74S182	TTL	1-19	CR
156-1048-02	A	Monolithic	SN74S182J	TTL	1-19	CR
		Signetics	N74S182FB			
		Texas Instr	SN74S182JP4			
156-1049-00	N	AMD	AM25S08DC	TTL		CR
156-1049-01	X		25S08	Op Amp		DL
156-1050-00	N	Digital Eq	1909058	TTL		CS
		∞Fairchild	74H21DC			
		∞Natl Semic	DM74H21J			
		∞Signetics	N74H21F			
		∞Texas Instr	SN74H21J			
156-1051-00	N	Intel	B2101A-2	Mem Sel Guide		CS
		Signetics	21012N 650NS			
156-1052-00	N	Intel	B2101A-4	Mem Sel Guide		CS
		Signetics	2101-1N 500NS			
156-1053-00	N	Digital Eq	1909713	TTL		CS
		Signetics	N8815N/F			
156-1054-00	N	Natl Semic	DM8556N	TTL	1-15	CR
156-1054-01	N	Natl Semic	DM8556NA+/JA+	TTL	1-15	CR
156-1055-00	X	Digital Eq	8640	TTL		CR
		Natl Semic	DS8640N			
156-1056-00	A	Motorola	MC1514L	Spec Funct	2-3	CR
156-1057-00	U	Amer Micro	AM9295	MOS		DL
156-1058-00	N	AMD	SN74S240J	TTL	1-14	CR
		Monolithic	74S240J			
		Texas Instr	SN74S240J			
156-1058-01	A	AMD	SN74S240JB	TTL	1-14	CR
		Monolithic	74S240JSCR			
		Texas Instr	SN74S240JP4			
156-1059-00	X	Fairchild	74LS109PC/DC	TTL		NP
		∞Signetics	N74LS109N/F			
		Texas Instr	SN74LS109AN/J			
156-1059-01	A	Fairchild	74LS109PCQR/DCQR	TTL	1-17	CR
		Hitachi	HD74LS109P			
		Motorola	SN74LS109ANDS/JDS			
		Natl Semic	DM74LS109NA+/JA+			
		Texas Instr	SN74LS109ANP3/JP4			
156-1060-00	U	Harris	HM1-6508-9	MOS		DL
		Intersil	IM6508-I-E			
156-1061-00	X	Fairchild	74S109PC/DC	TTL		NP
156-1061-01	X		74S109	TTL		NP
156-1061-02	A	Fairchild	74S109PCQR/DCQR	TTL	1-17	CR
156-1062-00	N	AMD	AM25S18DC	TTL	1-19	CR
156-1062-01	N		25S18	TTL		DL
156-1062-02	N	AMD	AM25S18DCB	TTL	1-19	CR
156-1063-00	X	Fairchild	93S47DC	TTL		DL
156-1063-01	A	Fairchild	93S47DCQR	TTL	1-14	CR
156-1063-02	X		93S47DC	TTL		DL
156-1064-00	N	AMD	SN74S157N/J	TTL	1-15	CR
		Signetics	N74S157B/F			
		Texas Instr	SN74S157N/J			
156-1064-01	N		74S157	TTL	1-15	CR
156-1064-02	A	AMD	SN74S157JB	TTL	1-15	CR
		Signetics	N74S157FB			
		Texas Instr	SN74S157JP4			
156-1065-00	N	AMD	SN74LS373N/J	TTL	1-19	CR
		∞Fairchild	74LS373PC/DC			
		Raytheon	74LS373N/J			
		Texas Instr	SN74LS373N/J			

** NEW DESIGN RECOMMENDATION FROM COMPONENT ENGINEERING:

A = Acceptable
N = Not Recommended
U = Undefined
X = Do Not Use

INTEGRATED CIRCUIT PART NUMBER INDEX (CONT)
TEK PART NUMBER TO VENDOR NUMBER

PART NUMBER	** ND	VENDOR	VENDOR NO.	TYPE	* PAGE NO.	§§ ST
156-1065-01	A	AMD	AM74LS373PCB/DCB	TTL	1-19	CR
		Texas Instr	SN74LS373NP3/JP4			
156-1066-00	X	Motorola	MC8507	µP Sup		CS
156-1067-00	U	Motorola	MCM68316EL/P	MOS		CR
156-1067-01						DL
156-1068-00	U	Motorola	MCM68316EL/P	MOS		NP
156-1068-01	U					CR
156-1069-00	U	Motorola	MCM68316EL/P	MOS		CR
156-1070-00	U	Motorola	MCM68316EL/P	MOS		NP
156-1070-01	U					CR
156-1071-00	U	Motorola	MCM68316EL/P	MOS		CR
156-1072-00	U	Motorola	MCM68316EL/P	MOS		CR
156-1073-00	U	Motorola	MCM68316EL/P	MOS		CR
156-1074-00	U	Motorola	MCM68316EL/P	MOS		NP
156-1074-01	U					CR
156-1075-00	U	Motorola	MCM68316EL/P	MOS		CR
156-1076-00	U	Motorola	MCM68316EL/P	MOS		CR
156-1077-00	U	Motorola	MCM68316EL/P	MOS		CR
156-1078-00	U	Motorola	MCM68316EL/P	MOS		NP
156-1078-01	U					CR
156-1079-00	U	Motorola	MCM68316EL/P	MOS		NP
156-1079-01	U					CR
156-1080-00	X	Fairchild	7407PC/DC	TTL		NP
		Natl Semic	DM7407N/J			
		∞Signetics	N7407N			
		Texas Instr	SN7407N/J			
156-1080-01	N	Fairchild	7407PCQR/DCQR	TTL	1-14	CR
		Natl Semic	DM7407NA+/JA+			
		Texas Instr	SN7407NP3/JP4			
156-1081-00	N	Motorola	MC944L	TTL		CS
156-1082-00	N	Motorola	MC936L	TTL		CS
156-1083-00	N	Natl Semic	DM74107NA+/JA+	TTL	1-17	CR
		Signetics	N74107NB/FB			
		Texas Instr	SN74107NP3/JP4			
156-1084-00	A	AMD	82S62N/J	TTL	1-19	PP
		Signetics	N82S62N/F			
156-1085-00	A	Fairchild	F100164FC	ECL	1-11	CR
156-1085-01						PP
156-1085-02	A		100164FC	ECL	1-11	PP
156-1086-00	X	Motorola	MC6875P/L	Multi Funct		CR
156-1087-00	U	∞AMD	C8085A	MOS		LR
		Natl Semic	MM5213N/J			
156-1088-00	A	AMD	C8085A	Multi Funct	1-2	CR
		Intel	D8085A			
156-1088-01	N	AMD	D/P8085AB	Multi Funct	1-2	CR
		Intel	QD/P8085A-S4447			
156-1088-02	A	AMD	D8085A-2	Multi Funct	1-2	CR
		Intel	D8085A-2			
156-1088-03						MP
156-1089-00	U	Amer Micro		MOS		NP
156-1090-00	U	Amer Micro		MOS		NP
156-1091-00	U	Amer Micro		MOS		OB
156-1092-00	U	Amer Micro		MOS		DL
156-1093-00	U	Amer Micro		MOS		NP
156-1094-00	U	Amer Micro		MOS		NP
156-1095-00	U	Amer Micro		MOS		NP
156-1096-00	U	Amer Micro		MOS		NP
156-1097-00	U	Amer Micro		MOS		NP
156-1098-00	U	Amer Micro		MOS		NP
156-1099-00	U	Texas Instr	TMS4732	MOS		DL
156-1100-00	U	Elec Arrays	P/C8308A-750	MOS		CR
156-1101-00	A	Texas Instr	TMS2716JL	Mem Sel Guide	1-7	CR
156-1102-00	U	Motorola	MCM68316EL/EP	MOS		CR
156-1103-00	U	Motorola	MCM68316EL/EP	MOS		CR
156-1104-00	U	Motorola	MCM68316EL/EP	MOS		CR
156-1105-00	U	Motorola	MCM68316EL/EP	MOS		CR
156-1106-00	U	Motorola	MCM68316E/L	MOS		DL
156-1107-00	U	Motorola	MCM68316E/P	MOS		DL
156-1108-00	X	∞Fairchild	74LS92P	TTL		NP
		Texas Instr	SN74LS92N/J			
156-1108-01	X		74LS92	TTL		DL
156-1108-02	A	Texas Instr	SN74LS92NP3/JP4	TTL	1-15	CR
156-1109-00	X	Natl Semic	DM74S188CHJ/N	TTL		CR
		∞Texas Instr	SN7488AJ/N			

PART NUMBER	** ND	VENDOR	VENDOR NO.	TYPE	* PAGE NO.	§§ ST
156-1110-00	X	Natl Semic	DS8856N	TTL		DL
156-1111-00	X	Motorola	SN74LS245N/J	TTL		NP
		Texas Instr	SN74LS245N/J			
156-1111-01	X		74LS245	TTL		NP
156-1111-02	A	Monolithic	SN74LS245J	TTL	1-14 & 16	CR
		Motorola	SN74LS245JDS			
		Texas Instr	SN74LS245JP3			
156-1112-00	N	Mostek	MK4027P-2	Mem Sel Guide	1-4	CS
156-1113-00	N	Intel	D4289	Multi Funct	1-2	CR
156-1114-00	A	RCA	CA3160E	Op Amp	3-4	CR
156-1114-01	A	RCA	CA3160E/5	Op Amp	3-4	CR
156-1115-00	N	RCA	TA6993	CMOS	1-10	CR
156-1116-00	U	Amer Micro	S831B	MOS		DL
156-1117-00	U	Amer Micro	S831B	MOS		DL
156-1118-00	A	Motorola	MC14433PD	Spec Funct	2-2	OB
156-1119-00	N	Texas Instr	158097N	TTL		PP
156-1120-00	N	Texas Instr	15861N	TTL		PP
156-1121-00	N	Texas Instr	SN74LS378N3/J4	TTL		PP
156-1122-00	N	Texas Instr	15863N	TTL		CS
156-1123-00	N	Texas Instr	15858N	TTL		PP
156-1124-00	N	Texas Instr	15837N	TTL		PP
156-1125-00	X	ITT Semic	8633N	TTL		NP
156-1126-00	A	Nippon	µPC311C	Spec Funct	2-3	CR
		Silicon Gen	SG311M			
		Texas Instr	LM311P			
156-1126-01	A	Silicon Gen	SG311Y	Spec Funct	2-3	CR
		Texas Instr	LM311JG4			
156-1126-02						SC
156-1127-00	A	AMD	AM91L14BDC	Mem Sel Guide	1-6	CR
		∞Intel	D2114L-4			
		Intersil	IM7114LCJN			
156-1127-01	N	Intel	INT2114L			CR
156-1127-02	N	Intel	2114L			NP
156-1128-00	U	Motorola	MCM68316E/L	Linear		CR
156-1129-00	U	Motorola	SCM44872L/ MCM68316E/L	MOS		CR
156-1130-00	U	Motorola	MCM68316E/L	MOS		DL
156-1131-00	U	Motorola	MCM68316E/L	MOS		DL
156-1132-00	U	Amer Micro	C10439	NMOS		CR
156-1133-00	A	Motorola	MC3448AP/AL	Multi Funct	1-3 & 16	CR
156-1133-01	N		MC3448	Multi Funct	1-16	CR
156-1133-02	A		MC3448	Multi Funct	1-16	CR
156-1134-00	A	RCA	CA3140EX	Op Amp	3-4	CR
156-1134-01		RCA	CA3140AE	Op Amp	3-4	PP
156-1135-00	U	Amer Micro	S6831B	MOS		NP
156-1136-00	U	Amer Micro	S6831B	MOS		DL
156-1137-00	U	Amer Micro	S6831B	MOS		NP
156-1138-00	U	Amer Micro	S6831B	MOS		NP
156-1139-00	U	AMD	AM9208BDC	MOS		NP
156-1140-00	U	AMD	AM9208BDC			
156-1141-00	U	AMD	AM9208BDC	MOS		NP
156-1142-00	U	AMD	AM9208BDC	MOS		NP
156-1143-00	U	AMD	AM9208BDC	MOS		DL
156-1144-00	U	AMD	AM9208BDC	MOS		DL
156-1145-00	U	AMD	AM9208BDC	MOS		DL
156-1146-00	N	Intersil	IM5604CDE	Mem Sel Guide	1-7	CS
156-1147-00	A	Motorola	MC1391P	Linear	3-1	CR
		RCA	CA1391G			
156-1147-01	X	∞Motorola	MC1391P	Linear		DL
		RCA	MC1391P			
156-1149-00	A	Natl Semic	LF351N	Op Amp	3-4	CR
156-1149-01	A	Natl Semic	LF351N/A+	Op Amp	3-4	CR
156-1150-00	A	Motorola	MC79L05ACP	Linear	3-1	CR
		Natl Semic	LM79L05ACZ			
156-1150-01	A	Motorola	MC79L05ACP	Linear	3-1	CR
156-1151-00	A	Natl Semic	DM74S288J	Mem Sel Guide	1-7	CR
156-1152-00	N	Motorola	MC14538BCL	CMOS	1-10	CR
156-1152-01	A	Motorola	MC14538BCLDS	CMOS	1-10	CR
156-1153-00	X	Natl Semic	MM5740AAC/D	MOS		LR

* LACK OF ENTRY IN COLUMN INDICATES ITEM IS NOT LISTED IN MFR/TEK SECTION OF CATALOG. THIS INDICATES ITEM IS OBSOLETE, NOT RECOMMENDED FOR NEW DESIGN, OR OF LIMITED USE (SUCH AS SPECIALIZED CUSTOM MASK).

∞ NOT CURRENT VENDOR.

§§ FOR STATUS CODES, SEE PAGE 4-39.

INTEGRATED CIRCUIT PART NUMBER INDEX (CONT)

TEK PART NUMBER TO VENDOR NUMBER

4

PART NUMBER	** ND	VENDOR	VENDOR NO.	TYPE	* PAGE NO.	§§ ST
156-1154-00	U	Motorola	MC14433P	Linear		SC
156-1155-00	U	SonyTek	UPC151C	Op Amp		SC
156-1156-00	A	Natl Semic	LF356N	Op Amp	3-4	CR
156-1156-01	A	Natl Semic	LF356N/A+	Op Amp	3-4	CR
156-1157-00	U	Elec Arrays	EA43357	MOS		CM
156-1158-00	U	Elec Arrays	EA43356	MOS		CM
156-1159-00	X	SonyTek	SCL4029B	CMOS		SC
156-1160-00	A	∞Fairchild	μA78L12AHC	Linear	3-1	CR
		Motorola	MC78L12ACG			
156-1160-01	N	Motorola	MC78L12ACGD	Linear	3-1	CR
156-1161-00	A	Fairchild	UA317UC	Linear	3-1	CR
		Natl Semic	LM317T			
156-1163-00	A	Motorola	MPQ2907	Array	3-2	CR
156-1164-00	X	Signetics	8X300-IZA	μP		CR
156-1165-00	U	SonyTek	stu-001	Linear		SC
156-1166-00	U	Motorola	MC1403P	Linear		SC
156-1167-00	U	Texas Instr	TMS4732	MOS		DL
156-1168-00	X	Motorola	MCM6571A	Mem Sel Guide		DL
156-1169-00	N	Natl Semic	DM74H20N	TTL		CS
		Texas Instr	SN74H20N			
156-1170-00	X	Natl Semic	DM8678CAB/N	Mem Sel Guide		CR
156-1171-00	N	Signetics	N82S09-I	Mem Sel Guide	1-5	CR
156-1172-00	X	Fairchild	74LS393P	TTL		NP
		Motorola	DM74LS393N			
		Texas Instr	SN74LS393N			
156-1172-01	A	Fairchild	74LS393PCQR/DCQR	TTL	1-15	CR
		Motorola	SN74LS393NDS/JDS			
		Texas Instr	SN74LS393NP3/JP4			
156-1172-02	X	Motorola	SN74LS393NDS	TTL		NP
		∞Texas Instr	SN74LS393NP3			
156-1173-00	A	Motorola	MC1403UDS	Linear	3-1	CR
		Silicon Gen	S63503 Fmly			
156-1174-00	U	Synertek	SYP/SYC2332	MOS		CS
		∞Texas Instr	4732			
156-1175-00	U	Synertek	SYP/SYC2332	MOS		CS
		∞Texas Instr	4732			
156-1176-00	A	Texas Instr	SN74LS348N/J	TTL		NP
156-1176-01	A	Texas Instr	SN74LS348NP3	TTL	1-17	CR
156-1177-00	X	Texas Instr	SN74LS147N	TTL		NP
156-1177-01	A	Texas Instr	SN74LS147NP3	TTL	1-17	CR
156-1178-00	U	Intel	2115-AL	MOS		DL
156-1178-01						SC
156-1179-00	X	AMD	SN74S241N/J	TTL	1-14	NP
		Monolithic	SN74S241N20			
		Texas Instr	SN74S241N/J			
156-1179-01	A	AMD	SN74S241JB	TTL	1-14	CR
		Monolithic	74S241JSCR			
		Texas Instr	SN74S241JP4			
156-1180-00	U	Signetics	N2616N	MOS		DL
156-1181-00	U	Signetics	N2616N	MOS		DL
156-1182-00	A	Signetics	N82S185F	Mem Sel Guide	1-7	CR
156-1183-00	A	Texas Instr	SN74S197JP4	TTL	1-15	CR
156-1184-00	N	Natl Semic	DA1200HCB	Spec Funct	2-2	CR
156-1184-01		Natl Semic	DAC1200HCD			PP
156-1184-02		Natl Semic				MP
156-1185-00	U	Intel	2104A-1	MOS		DL
156-1186-00	N	AMD	93L09PC	TTL		CS
156-1187-00	N	Natl Semic	DM74365	TTL	1-16	CS
		Texas Instr	SN74365N			
156-1188-00	N	AMD	AM9111DDC	Mem Sel Guide	1-6	LS
		∞Intel	2111A-1			
		Synertek	SY2111A-2			
156-1189-00	A	AMD	SN74S189J/ AM27S03J	Mem Sel Guide	1-5	CR
		∞Signetics	N74S189F			
		∞Texas Instr	SN74S189J			
156-1189-01	A	AMD	SN74S189JB	Mem Sel Guide	1-5	CR
156-1190-00	A	∞Natl Semic	LF353N	Array	3-2	CR
		∞Plessey	SL3082DP			
		RCA	CA3082			
156-1191-00	A	Natl Semic	LF353N	Op Amp	3-4	CR
		Texas Instr	TL072ACP			
156-1191-01	A	Texas Instr	TL072ACP3	Op Amp	3-4	CR
156-1192-00	U	Telequipmt		Linear		TC
156-1193-00		Perkin-Elmer	301277-001			CS
156-1194-00	X	AMD	SN74S138N/J	TTL		DL
		Texas Instr	SN74S138N/J			

PART NUMBER	** ND	VENDOR	VENDOR NO.	TYPE	* PAGE NO.	§§ ST
156-1195-00	N	AMD	AM26S02PC/DC	TTL	1-19	CR
		∞Hamilton-Av	26S02PC			
156-1195-01	N	AMD	AM26S02PCB/DCB	TTL	1-19	CR
156-1196-00	X	AMD	SN74S181N/J	TTL		DL
		Texas Instr	SN74S181N/J			
156-1197-00	N	Texas Instr	SN74S299J	TTL	1-20	CR
156-1197-01	N	Texas Instr	SN74S299JP4	TTL	1-20	CR
156-1198-00	X	Texas Instr	SN74S163J	TTL		NP
156-1198-01	A	Texas Instr	SN74S163JP4	TTL	1-15	CR
156-1199-00	X		74S122	TTL		DL
156-1200-00	A	Natl Semic	LF347N	Op Amp	3-4	CR
		Texas Instr	TL074CN			
156-1200-01	A	Texas Instr	TL074CN/PEP3	Op Amp	3-4	CR
156-1201-00	N	Natl Semic	DM74L154N	TTL		CS
		Texas Instr	SN74L154N			
156-1202-00	A	Intel	D/P8257/S2876	Multi Funct	1-2	CR
		NEC America	μPD8257C-5			
156-1203-00	X	Intel	D/P8238	Multi Funct		DL
		Natl Semic	DP8238J/D			
		Nippon Elec	μPB8238C/D			
156-1204-00	X	Intel	P8259	Multi Funct		DL
156-1204-01	A	Intel	QD8259A	Multi Funct	1-2	CR
156-1205-00	A	Fairchild	F68B21P	Multi Funct	1-2	CR
		Motorola	MC68B21P/L			
156-1205-01	A	Motorola	MC68B21S/L	Multi Funct	1-2	PP
156-1206-00	A	Amer Micro	S68B50P/E/C	Multi Funct	1-2	CR
		Motorola	MC68B50P/L			
156-1207-00	A	Motorola	MC79L12ACG	Linear	3-1	CR
156-1207-01	N	Motorola	MC79L12ACGD	Linear	3-1	PP
156-1208-00	X	Motorola	MCM66714C	MOS		CR
156-1209-00	A	AMD	AM2911ADC	TTL		CR
		∞Motorola	MC2911LC			
		Natl Semic	IDM2911AJC			
156-1209-01	A	AMD	AM2911ADCB	TTL		CR
		∞Motorola	MC2911LDS			
		∞Natl Semic	IDM2911AJC			
156-1210-00	X	Fairchild	93425ADC	TTL		DL
		Signetics	82S111F			
156-1211-00	A	Natl Semic	LF13333N	Spec Funct	2-3	CR
156-1211-01			F13333	Spec Funct		DL
156-1212-00	X	Natl Semic	INS8060N	Multi Funct		DL
156-1212-01	X	Natl Semic	8060DJA+	Multi Funct		CR
156-1213-00	A	∞AMD	AM27	Mem Sel Guide	1-7	CR
		Monolithic	53/6353-1J			
156-1213-01	U		MM16353-1			CR
156-1214-00	X	Motorola	MC10118L	ECL		DL
156-1214-01	A	Motorola	SC22689L118/P118	ECL	1-11	CR
156-1215-00	N	Natl Semic	MM74C923N	CMOS	1-10	CR
156-1215-01	A	Natl Semic	MM74C923JA+	CMOS	1-10	CR
156-1216-00	X	∞Signetics	74S37F	TTL		DL
		Texas Instr	SN74S37J			
156-1216-01	A	Texas Instr	SN74S37JP4	TTL		CR
156-1217-00		TRW, Inc.	OPB706A			CR
156-1218-00	N	Fairchild	3850PC/DC	MOS		CR
		Mostek	MK3850N-3/P-3			
156-1219-00	A	Motorola	MC3440AP	Multi Funct	1-3 & 16	CR
156-1219-01	X		3440	Multi Funct		CR
156-1219-02						DL
156-1219-03	A	Eaton-Pacfc	3440P	Multi Funct	1-3 & 16	MP
		Comp Cncpts	3440P			
156-1220-00	N	Natl Semic	DM74LS365N/J	TTL	1-16	CR
		∞Signetics	N74LS365N/F			
		Texas Instr	SN74LS365AN/J			
156-1220-01	A	Natl Semic	DM7465365NA+/JA+	TTL	1-16	CR
		Texas Instr	SN74LS365NP3/JP4			
156-1221-00	A	Motorola	SN74LS378NDS/JDS	TTL	1-17	CR
		Texas Instr	SN74LS378NP3/JP4			
156-1222-00	X	Texas Instr	SN74LS290			SC

** NEW DESIGN RECOMMENDATION FROM COMPONENT ENGINEERING:

A = Acceptable
N = Not Recommended
U = Undefined
X = Do Not Use

INTEGRATED CIRCUIT PART NUMBER INDEX (CONT)

TEK PART NUMBER TO VENDOR NUMBER

PART NUMBER	** ND	VENDOR	VENDOR NO.	TYPE	* PAGE NO.	§§ ST
156-1223-00	A	Fairchild	93422	Mem Sel Guide	1-5	CR
		∞Natl Semic	SL42367			
156-1224-00	U	Motorola	MC7086C			SC
156-1225-00	A	Natl Semic	LM393N	Spec Funct	2-3	CR
		Signetics	LM393N			
156-1225-01	A	Natl Semic	LM393N/A+	Spec Funct	2-3	CR
156-1225-02	X		LM393	Spec Funct		DL
156-1226-00	A	AMD	AM319D	Spec Funct	2-3	CR
		Natl Semic	LM319J			
		Signetics	LM319FH			
156-1226-01	A	AMD	LM319D/883B	Spec Funct	2-3	CR
		Natl Semic	LM319J/A+			
156-1227-00	N	∞Fairchild	F10470DC	Mem Sel Guide	1-5	CR
	A	Fujitsu	MBM10470-20			
	N	Hitachi	HM10470DG			
	N	NEC America	B10470			
156-1227-01	A	Fairchild	F10470DC	Mem Sel Guide	1-5	CR
		Fujitsu	MBM10470-20			
156-1228-00	A	Hitachi	HM6147	Mem Sel Guide	1-6	CR
		Intel	CD2147H			
		∞Motorola	MCM2147C70			
		NEC America	D2147D-2, 70NS			
		Toshiba	TMM2147			
156-1228-01	U		2147			NP
156-1229-00	X	∞AMD	SN74LS258N	TTL		NP
		Signetics	N74LS258AN/F			
		Texas Instr	SN74LS258N/J			
156-1229-01	A	Fairchild	74LS258PCQR/DCQR	TTL	1-15	CR
		Natl Semic	DM74LS258NA+/JA+			
		Signetics	N74LS258NB/FB			
		Texas Instr	SN74LS258NP3/JP4			
156-1230-00	N	Signetics	N8T32-001P	Multi Funct		CM
156-1231-00	N	Signetics	N8T32-002P	Multi Funct		CM
156-1232-00	N	Signetics	N8T32-003P	Multi Funct		CM
156-1233-00	N	Signetics	N8T32-004P	Multi Funct		CM
156-1234-00	N	Signetics	N8T32-005P	Multi Funct		CM
156-1235-00	A	∞Motorola	SN74LS145NDS	TTL	1-16	CR
		Texas Instr	SN74LS145N3/J4			
156-1236-00	A	Intersil	DG181BA	Spec Funct	2-3	CR
		Siliconix	DG181BA			
156-1237-00	U	∞Optron, Inc	OPB4428	Linear		CR
		∞Spectronics	SPX 1874-2			
		TRW, Inc.	OPB4428			
156-1237-01		Gen Elec	H21A2			CR
156-1238-00	U	Gen Elec	H11CX604	Linear		CR
		∞Honeywell	SC511C6			
		∞Monsanto	MCS2400			
156-1239-00	U	Synertek	C41087/SYP2332	NMOS		CM
156-1240-00	U	Synertek	SYP2332	NMOS		CM
156-1241-00	N	Fairchild	F3853DC	MOS	1-13	CR
		Mostek	MK3853P			
156-1242-00	N	Fairchild	F3871EPC	Multi Funct	1-2	CR
		Mostek	MK3871P/90071			
156-1243-00	N	Natl Semic	DM74LS47N	TTL	1-16	CR
		Texas Instr	SN74LS47N			
156-1243-01	A	Natl Semic	DM74LS47NA+/JA+	TTL	1-16	CR
		Texas Instr	SN74LS47NP3/JP4			
156-1244-00	A	Motorola	MC78L08ACG	Linear	3-1	CR
		Natl Semic	LM78L08ACH			
156-1245-00	A	Motorola	MC1413PDS	Array	3-2	CR
		Sprague Elec	ULN2003AP			
156-1246-00	X	Motorola	SC80909L	Multi Funct		DL
156-1246-01	X	Motorola	MC6848BLD	Multi Funct		CR
156-1247-00	A	∞Fairchild	10130DC	ECL	1-12	CR
		Motorola	MC10130P			
		Signetics	10130B			
156-1247-01	A	Fairchild	F10130PCQR/DCQR	ECL	1-12	PP
		Motorola	SC22689P130			
		Signetics	10130FB/NB			
156-1248-00	A	Plessey	SP8629DPB	ECL	1-12	CR
156-1249-00	A	Analog Dev	AD40227	Linear	3-1	CR
156-1250-00	N	∞AMD	74S373N	TTL	1-19	CR
		Texas Instr	SN74S373N			
156-1250-01	N	AMD	AM74S373J	TTL		CR
		∞Monolithic	SN74S373J			
		Texas Instr	SN74S373J			

§§ FOR STATUS CODES, SEE PAGE 4-39.

PART NUMBER	** ND	VENDOR	VENDOR NO.	TYPE	* PAGE NO.	§§ ST
156-1250-02	A	AMD	AM74S373NB/JB	TTL	1-19	CR
		Texas Instr	SN74S373NP3/JP4			
156-1251-00	N	Natl Semic	DM86LS62JA+	TTL	1-20	CR
156-1252-00	A	Texas Instr	SN74LS148NP3	TTL	1-17	CR
156-1252-01	X	Texas Instr	SN74LS148NP3/JP4	TTL		PP
156-1253-00	X	Motorola	68B00	Multi Funct		DL
156-1254-00	A	Signetics	N82S107I	TTL	1-19	CR
156-1255-00	A	∞AMD	DAC08HQ	Spec Funct	2-2	CR
		Motorola	DAC08HQ			
		Prec. Mono	DAC08HQ			
		∞Signetics	NE5009F			
156-1255-01	A	∞AMD	DAC-08HQB	Spec Funct	2-2	CR
		Motorola	DAC-08HQDS			
		Prec. Mono	DAC-08156Q			
156-1255-02						SC
156-1256-00	A	Intersil	IH5010CJD/CDD	Spec Funct	2-3	CR
		∞Natl Semic	AM9710CN			
156-1257-00	A	Intel	D8291A	Multi Funct	1-3	CR
156-1257-01	X					SC
156-1258-00	X	Motorola	SN74LS112N/J	TTL		NP
		Natl Semic	DM74LS112N/J			
		Texas Instr	SN74LS112N/J			
156-1258-01	N	Motorola	SN74LS112NDS/JDS	TTL	1-17	CR
		Natl Semic	DM74LS112NA+/JA+			
		Texas Instr	SN74LS112NP3/JP4			
156-1259-00	A	Analog Dev	AD41055	Spec Funct	2-2	CR
156-1260-00	A	Motorola	MC79L15ACP	Linear	3-1	CR
		Natl Semic	LM79L15AC2			
156-1261-00	A	Fairchild	μA78L15AWC	Linear	3-1	CR
		Motorola	MC78L15ACP			
156-1261-01	X		78L15ACP	Linear		DL
156-1261-02	N	Motorola	MC78L15ACPD	Linear	3-1	PP
156-1262-00	N	Natl Semic	LM341P-15.0TB	Linear	3-1	CR
		∞Texas Instr	μA78M15CKF			
156-1263-00	N	Natl Semic	LM314P-5.0TB	Linear	3-1	CR
		∞Texas Instr	μS78M05CKF			
156-1264-00	N	Natl Semic	LM79M12CPTB	Linear	3-1	CR
		∞Texas Instr	μA79M12CKF			
156-1265-00	U	Nippon Elec	UPC458C			
156-1266-00	A	Motorola	SC77113LH	Linear	3-1	CR
156-1266-01	X	Motorola	SC71196LH	Linear		OB
156-1267-00	A	Motorola	SN74LS15NDS/JDS	TTL	1-18	CR
		Natl Semic	DM74LS15NA+/JA+			
		Texas Instr	SN74LS15NP3/JP4			
156-1267-01	N	∞Fairchild	SL82589	TTL	1-18	CR
		Motorola	SN74LS15NDS/JDS			
		Texas Instr	SN74LS15NP3/JP4			
156-1268-00	A	Siliconix	LD111ACJ	Spec Funct	2-2	CR
156-1268-01	N	Siliconix	LD111A	Spec Funct	2-2	MP
156-1269-00	A	Signetics	N82S100I	TTL	1-19	CR
156-1270-00	A	Natl Semic	LF11508D	Spec Funct	2-3	CR
		Prec. Mono	MUX08FQ			
156-1271-00	U	Motorola	MC1410	Linear		DL
156-1272-00	A	Exar	XR5532CN	Op Amp	3-3	CR
		Signetics	NE5532FE-IIB			
156-1273-00	X	AMD	AM25LS2521PC	TTL		NP
156-1273-01	A	AMD	25LS125PCB2/DCB2	TTL	1-14	CR
156-1274-00	A	Intersil	ICM213IPD	CMOS	1-10	CR
156-1275-00	X	Signetics	N74LS96N	TTL		DL
		Texas Instr	SN74LS96N			
156-1275-01	X		74LS96	TTL		DL
156-1275-02	A	Signetics	N74LS96FB/NB	TTL		CR
		Texas Instr	SN74LS96NP3/JP4			
156-1276-00	U	Motorola	SN74LS13N/J	TTL		DL
		Natl Semic	DM74LS13N/J			
		Texas Instr	SN74LS13N/J			
156-1276-01	U		74LS13	TTL		DL
156-1277-00	A	AMD	AM81LS95NB/JB	TTL	1-14	CR
		Natl Semic	DM81LS95NA+/JA+			
156-1278-00	A	Intel	CD2115A	Mem Sel Guide	1-6	CR
156-1279-00	A	RCA	CPD1857D	CMOS	1-10	PP

* LACK OF ENTRY IN COLUMN INDICATES ITEM IS NOT LISTED IN MFR/TEK SECTION OF CATALOG. THIS INDICATES ITEM IS OBSOLETE, NOT RECOMMENDED FOR NEW DESIGN, OR OF LIMITED USE (SUCH AS SPECIALIZED CUSTOM MASK).

∞ NOT CURRENT VENDOR.

INTEGRATED CIRCUIT PART NUMBER INDEX (CONT)

TEK PART NUMBER TO VENDOR NUMBER

PART NUMBER	** ND	VENDOR	VENDOR NO.	TYPE	* PAGE NO.	§§ ST
156-1280-00	A	RCA	CDP1802AD	Multi Funct	1-2	CR
156-1281-00	N	Intel	P2114AL-4/S7129	Mem Sel Guide	1-6	CR
156-1282-00	A	Motorola	MC14532BCL	CMOS	1-10	EN
		RCA	CD4532BF			
156-1282-01						SC
156-1283-00	A	Fairchild	SL28885	Linear	3-1	CR
156-1284-00	A	Motorola	MC3405P	Spec Funct	2-3	CR
156-1285-00	A	Fairchild	74S65DCQR	TTL	1-18	CR
		Signetics	N74S65FB			
		Texas Instr	SN74S65NP3/JP4			
156-1286-00	A	Signetics	N74S09NB/FB	TTL	1-18	CR
		Texas Instr	SN74S09N3/J4			
156-1287-00	A	Fairchild	10100PC	ECL	1-11	PP
		Motorola	MC10100P			
		Signetics	N10100B			
156-1288-00	U		S4264	MOS		SC
156-1289-00	U		S4264	MOS		SC
156-1290-00	U		S4264	MOS		SC
156-1291-00	A	Texas Instr	TL062CP/PEP3	Op Amp	3-4	CR
156-1292-00	A	Texas Instr	SN74S283J	TTL	1-14	CR
156-1292-01	N	Texas Instr	SN74S283JP4	TTL	1-14	CR
156-1293-00	A	AMD	AM73L422DC	Mem Sel Guide	1-5	CR
		Fairchild	93L422PC			
156-1293-01	A	AMD	AM93L422BPC/DC	Mem Sel Guide	1-5	CR
156-1294-00	A	Plessey	SL3127CDP	Array	3-2	CR
		RCA	CA3127E			
156-1295-00	N	Texas Instr	TMS9902JL	Multi Funct	1-2	CR
156-1296-00	N	Texas Instr	TMS9901JL	Multi Funct	1-2	CR
156-1297-00	A	Fujitsu	MB7072EC	Mem Sel Guide	1-5	CR
156-1297-01	A	Fujitsu	MB7072N	Mem Sel Guide	1-5	CR
156-1298-00	N	Synertek	SY21H01-2	Mem Sel Guide	1-6	CR
156-1298-01	N	Synertek	SY2H01-2	Mem Sel Guide	1-6	PP
156-1299-00	X			STTL		DL
156-1300-00	N			TTL		SC
156-1301-00	N	Fujitsu	MB8414E/C	Mem Sel Guide	1-5	LR
156-1301-01	N	Fujitsu	MB8414E	Mem Sel Guide	1-5	CR
156-1302-00	X	Plessey	SP8610M	ECL		OT
156-1302-01	A	Plessey	SP8611BDC/DG	ECL	1-12	CR
156-1303-00	A	SemiProcess	SD5000N	Spec Funct	2-3 & 3-2	CR
		∞Signetics	SD5000N			
156-1303-01	A	SemiProcess	5S024	Spec Funct		PP
156-1304-00	A	∞Motorola	MC75140LDS			CR
		Texas Instr	SN75140JG4			
156-1305-00	A	Siliconix	LD121ACJ	Spec Funct	2-2	CR
156-1306-00	A	Siliconix	LD120CJ	Spec Funct	2-2	CR
156-1306-01						DL
156-1307-00	A	Burr-Brown	ADC80AG-12	Spec Funct	2-2	PP
156-1308-00	A	Raytheon	RM4194D	Linear		CR
		∞Silicon Gen	SG4194J			
156-1308-01	A		RM4194D	Linear		CR
156-1309-00	A	Fairchild	SL81664	ECL	1-12	CR
156-1310-00	A	Harris	HD3-6402	Multi Funct	1-2	PP
		Intersil	IM6402IPL			
156-1310-01	X	Intersil	64S021	Multi Funct		CR
156-1310-02	A		64S02IPL	Multi Funct	1-2	PP
156-1311-00	A	Signetics	NE5018-11B	Spec Funct	2-2	PP
156-1312-00	A	Prec. Mono	SMP11-FY	Spec Funct	2-3	CR
156-1313-00	A	Motorola	SN74LS166NDS/JDS	TTL	1-20	CR
		Texas Instr	SN74LS166NP3/JP4			
156-1314-00	A	Motorola	MC8506P/L	TTL		CR
156-1315-00	A	AMD	AM26LS32PCB/DCB	TTL	1-16	CR
		Natl Semic	26LS32NA+/JA+			
		∞Texas Instr	SN26LS32N3/J4			
156-1316-00	A	AMD	AM26LS30PCB2/DCB2	TTL	1-16	CR
		Natl Semic	DS3691NA+/JA+			
156-1318-00	A	∞Motorola	SN74LS375N/J	TTL	1-19	CR
		Signetics	N74LS375NB/FB			
		Texas Instr	SN74LS375NP3/JP3			
156-1319-00	A	RCA	CD40115D	CMOS	1-10	CR
156-1320-00	A	Motorola	MC14078BCLDS	CMOS	1-9	CR
		RCA	CD4078BFX			
156-1321-00	A	Hybrid Sys	DAC331C-10-1	Spec Funct	2-2	CR
156-1322-00	A	Analog Dev	AD40374	Linear	3-1	CR
156-1323-00	A	AMD	AM91L24CDC	Mem Sel Guide	1-6	CR
156-1323-01	A	AMD	AM91L24CDC	Mem Sel Guide	1-6	CR
156-1324-00	N	Natl Semic	LM361N/A+	Spec Funct	2-3	CR
156-1325-00	A	Texas Instr	TBP18SA030	Mem Sel Guide	1-7	CR
156-1326-00	A	AMD	SN74LS379NB2/JB2	TTL	1-17	CR
		Texas Instr	SN74LS379N3/J4			
156-1327-00	A	Natl Semic	MM74C374NA+/JA+	CMOS	1-9	CR
156-1327-01	X	Natl Semic	MM74C374JA+	CMOS		DL
156-1328-00	N	Signetics	82S70NB/FB	TTL	1-20	CS
156-1329-00	A	Analog Dev	AD565AJD	Spec Funct	2-2	CR
156-1330-00	U		S42168	TTL		SC
156-1331-00	X		HD74S86S	TTL		SC
156-1332-00	X		HD74S64S	TTL		SC
156-1333-00	X		7D74S04S	TTL		SC
156-1334-00	N		HD101255	TTL		SC
156-1335-00	A	Fairchild	96LS02PCQR/DCQR	TTL	1-19	CR
156-1336-00	N	Natl Semic	INS8250DA+/NA+	Multi Funct	1-2	CR
156-1336-01	A	Natl Semic	INS8250BD/N	Multi Funct		CR
156-1337-00	A	Natl Semic	MM5369AA/N	CMOS	1-10	CR
156-1338-00	A	Signetics	NE5534N	Op Amp	3-3	CR
		Texas Instr	NE5534P			
156-1338-01	A	Signetics	NE5534AN	Op Amp	3-3	CR
156-1338-02	A	Exar	XR5534CN	Op Amp	3-3	CR
		Signetics	NE5534			
		Texas Instr	NE5534P3			
156-1339-00	A	Signetics	NE521N/SUPRII-B	Spec Funct	2-3	CR
156-1340-00	X	Motorola	MC14071BCL	CMOS		NP
		RCA	CD4071BF			
156-1340-01	A	Motorola	MC14071BCLD	CMOS	1-9	CR
		RCA	CD4071BFX			
156-1341-00	N	Fairchild	F40098BDC	CMOS	1-9	CR
		Natl Semic	MM80C98J			
156-1341-01	A	Fairchild	F40098BDCQR	CMOS	1-9	CR
		Natl Semic	MM80C98JA+			
156-1342-00	A	Amer Micro	S6802D/C	Multi Funct	1-2	CR
		Fairchild	F6802DC			
		Motorola	MC6802S/L			
156-1342-01	A	Amer Micro	S68A08D/C	Multi Funct	1-2	PP
		Fairchild	F68A08P/D			
		Motorola	SC67127P			
156-1343-00	A	Signetics	82S129FN/IN	Mem Sel Guide	1-7	CR
156-1344-00	A	Plessey	SP9685CM	Spec Funct	2-3	CR
156-1345-00	A	TRW, Inc.	TDS5180	Spec Funct	2-2	CR
156-1346-00	A	Fairchild	3341AA	MOS	1-13	PP
156-1347-00	N	Natl Semic	DS88L12N/J	TTL	1-14	CR
156-1348-00	A	Natl Semic	LM345-5.2K	Linear	3-1	CR
156-1349-00	A	RCA	CA3054	Array	3-2	CR
156-1349-01	X	RCA	CA3054S/5	Array		OB
156-1350-00	U		2125AL-2	TTL		DL
156-1351-00	N	∞AMD	SN74S158PC/DC	TTL	1-15	CR
		Signetics	N74S158N/F			
		Texas Instr	SN74S158N/J			
156-1351-01	A	Natl Semic	DM74S158NA+/JA+	TTL	1-15	CR
		Signetics	N74S158NB/FB			
		Texas Instr	SN74S158NP3/JP4			
156-1351-02						DL
156-1352-00	A	Natl Semic	CD4019BCJA+	CMOS	1-9	CR
		RCA	CD4019BFX			
156-1353-00	A	Mostek	MK4116J-2	Mem Sel Guide	1-4	PP
		Nippon Elec	μPD416D-3			
156-1353-01	X		4116-2			DL
156-1353-02	X		4116-2			DL
156-1354-00	A	Signetics	N82S191F/I	Mem Sel Guide	1-7	CR
156-1355-00	A	AMD	AM2910DC			CR
		∞Motorola	MC2910L			
156-1355-01	A	AMD	AM2910DCB			PP
156-1356-00	A	Intel	D/P8243-S5037	Multi Funct	1-2	CR
		NEC Micro	μPB8243C/D			
		∞Nippon Elec	μPB8243C/D			

** NEW DESIGN RECOMMENDATION FROM COMPONENT ENGINEERING:

A = Acceptable
N = Not Recommended
U = Undefined
X = Do Not Use

INTEGRATED CIRCUIT PART NUMBER INDEX (CONT)
TEK PART NUMBER TO VENDOR NUMBER

PART NUMBER	** ND	VENDOR	VENDOR NO.	TYPE	* PAGE NO.	§§ ST
156-1356-01	A	Intel	D/P8243	Multi Funct	1-2	PP
156-1356-02	U		D/P8243			
156-1357-00	A	AMD	AM29721PCB2/DCB2	Mem Sel Guide	1-5	CR
156-1359-00	N	Fujitsu	MB8414E	Mem Sel Guide	1-5	LR
156-1359-01	N	Fujitsu	MB8414E/C	Mem Sel Guide	1-5	CR
156-1359-02	N	Fujitsu	MB8414E/C	Mem Sel Guide	1-5	LR
156-1360-00	A	AMD	AM93422PC/DC	Mem Sel Guide	1-5	CR
		Fairchild	93422DC/PC			
156-1360-01	A	AMD	AM93422PC/DC	Mem Sel Guide	1-5	CR
		Fairchild	93442DC/PC			
156-1361-00	U		36000P-5			DL
156-1362-00	A	Natl Semic	LM331N	Spec Funct	2-3	CR
		∞Raytheon	RC4151NB			
156-1363-00	N	Signetics	N74LS14X			CR
		Texas Instr	SN74LS14YMP			
156-1364-00	A	Intel	D8748	Multi Funct	1-2	CR
156-1365-00	A	Intel	D8741A	Multi Funct	1-2	PP
156-1366-00	A	Analog Dev	AD11/296	Spec Funct	2-2	CR
		Micro Power	MP7523JN			
156-1367-00	A	Analog Dev	AD11/279	Spec Funct	2-2	CR
		Micro Power	MP7424JN			
156-1367-01						SC
156-1368-00	A	Motorola	MC14555BCL	CMOS	1-9	OB
		RCA	CD4555BF			
156-1369-00	X	Motorola	MC14022BCLD	CMOS		OB
		RCA	CD4022BFX			
156-1370-00	A	Natl Semic	LF398H	Spec Funct	2-3	CR
156-1371-00	A	∞Fairchild	74LS168PC/DC	TTL	1-15	CR
		∞Natl Semic	DM74LS168N/J			
		Motorola	SN74LS168NDS/JDS			
		∞Texas Instr	SN74LS168AN/J			
156-1372-00	N	Texas Instr	TBP18S42	Mem Sel Guide	1-7	LR
156-1372-01	U	Texas Instr	TBP18S42			LR
156-1373-00	X	∞Fairchild	74LS125PC/DC	TTL		DL
		Natl Semic	DM74LS125N/J			
		Texas Instr	SN74LS125AN/J			
156-1373-01	A	Natl Semic	DM74LS125NA+/JA+	TTL		CR
		Texas Instr	SN74LS125N3/J4			
156-1374-00	X	Fairchild	10180DCQR	ECL		DL
		Motorola	SC22689L180			
156-1375-00	X	AMD	AM26LS2569PC/DC	TTL		DL
156-1375-01	A	AMD	AM25LS2569PCB/DCB	TTL		CR
156-1376-00	A	Fairchild	74LS181PCQR/DCQR	TTL	1-14	CR
		Motorola	SN74LS181NDS/JDS			
		Signetics	N74LS181NB/FB			
		∞Texas Instr	SN74LS181N/J			
156-1377-00	U		2716	NMOS		DL
156-1378-00	U		2716	NMOS		DL
156-1379-00	U		2716	NMOS		DL
156-1380-00	U		2716	NMOS		DL
156-1381-00	A	RCA	CA3096AE-17	Array	3-2	CR
156-1382-00	N	Mostek	MK4801APJ-4	Mem Sel Guide	1-6	CR
156-1382-01	N	Mostek	MK4118A-4P/J	Mem Sel Guide	1-6	DL
156-1382-02	N	Mostek	MK4118AN-4	Mem Sel Guide	1-6	PP
156-1383-00	A	Mostek	MK4118A-2	Mem Sel Guide	1-6	CR
156-1385-00	A	AMD	AM2942DCB	Multi Funct	1-2	CR
156-1386-00	A	SMC Micro	CRT5027	Multi Funct	1-2	PP
		Texas Instr	TMS9927JL			
156-1386-01	A	SMC Micro	CRT5027C	Multi Funct	1-2	CR
		Solid State	SND5027D/C			
		Texas Instr	9927JP4			
156-1387-00	A	Intel	D8039	Multi Funct	1-2	CR
156-1388-00	A	∞AMD	SN74LS399PC/DC	TTL	1-15	CR
		Motorola	SN74LS399NDS/JDS			
		Texas Instr	SN74LS399NP3/JP4			
156-1389-00	X	AMD	AM2950DC	Multi Funct		DL
156-1390-00	U	Texas Instr	TBP185A030	TTL		CS
156-1391-00	N	Natl Semic	LF352D	Op Amp		DL
156-1392-00	A	Monolithic	6349-1J	Mem Sel Guide	1-7	CR
156-1393-00	X	Signetics	N74S38FB	TTL		CR
		Texas Instr	SN74S38NP3/JP4			

PART NUMBER	** ND	VENDOR	VENDOR NO.	TYPE	* PAGE NO.	§§ ST
156-1393-01	A	Signetics	74S38FB	TTL	1-14	CR
		Texas Instr	SN74538NP3/JP4			
156-1394-00	N	AMD	AM93S10PC/DC	TTL		CS
		Fairchild	93S10PC/DC			
156-1395-00	X	∞AMD	74LS158PC/DC	TTL		NP
		Fairchild	74LS158PC/DC			
		Natl Semic	DM74LS158N/J			
		∞Texas Instr	SN74LS158N/J			
156-1395-01	A	Fairchild	74LS158PCQR/DCQR	TTL	1-15	CR
		Natl Semic	DM74LS158NA+/JA+			
		Texas Instr	SN74LS158NP3/JP4			
156-1396-00	A	Nippon Elec	μPC616A	Spec Funct	2-3	DL
156-1397-00	A	Natl Semic	MM74C30JA+	CMOS	1-9	PP
156-1398-00	A	Natl Semic	MM74C373JA+	CMOS	1-10	CR
156-1399-00	N	Fairchild	9406PC/DC	STTL		CS
156-1400-00	U		9124E	NMOS		DL
156-1401-00	A	Natl Semic	LM1848N	Linear	3-1	CR
156-1402-00	N	Rockwell Int	R6500/1EAC	Multi Funct	1-2	CR
		∞Synertek	SY6500/1EA			
156-1403-00	A	AMD	AM7232DC	Mem Sel Guide	1-7	CR
		Hitachi	HN462732			
		∞Intel	IC2732			
156-1403-01	U					DL
156-1404-00	N	Texas Instr	SBP9900AJC	Multi Funct	1-2	CR
156-1405-00	U		78HV12	Linear		DL
156-1406-00	U		78HV18	Linear		DL
156-1407-00	A	Natl Semic	DS8863N/J	TTL	1-17	CR
156-1408-00	A	Intersil	ICM7555/IPA	Spec Funct	2-3	CR
156-1408-01	A	Intersil	ICM7555/883-BIPA	Spec Funct	2-3	CR
156-1409-00	A	Burr-Brown	DAC80-CCD-I	Spec Funct	2-2	CR
156-1409-01	A		DAC80-CCD-I	Spec Funct	2-2	PP
156-1410-00	X					DL
156-1411-00	X	LSI Computr	LS7031	MOS		CR
156-1412-00	A	Intel	8272	Multi Funct	1-2	CR
		NEC Micro	μPD765			
156-1413-00	U			NMOS		DL
156-1414-00	N	Texas Instr	SN75160N/J	Multi Funct	1-3	CR
156-1414-01	A	Texas Instr	SN75160NP3/JP4	Multi Funct	1-3	CR
156-1414-02	A		75160	Multi Funct	1-3	PP
156-1415-00	A	Texas Instr	SN75161N/J	Multi Funct	1-3	CR
156-1415-01	A		75161	Multi Funct	1-3	PP
156-1416-00	A	Intel	D8086	Multi Funct	1-2	CR
156-1416-01	A	Intel	D8086-2	Multi Funct	1-2	CR
156-1417-00	A	Intel	D2716-1/S6623	Mem Sel Guide	1-7	CR
156-1418-00	U		UPB147D			SC
156-1419-00	X		TC5037P			SC
156-1420-00	U	Synertek	SYP2332/51079			SC
156-1421-00	X		TC4022BP			SC
156-1422-00	U		CA3240E			SC
156-1423-00	U		AN6551			SC
156-1424-00	X	Zilog	Z80A-SIO/1CS	Multi Funct		NP
156-1424-01	A	Mostek	MK3885P-4/N-4	Multi Funct	1-2	CR
		Zilog	Z80A-SIO/IPS01			
156-1424-02						SC
156-1425-00	U	Rockwell Int	R6502P/C	Multi Funct	1-2	CR
		Synertek	SYP/SYC6502			
156-1425-01	U	Rockwell Int	R6502AP/AC	Multi Funct	1-2	CR
		Synertek	SYP/SYC6502A			
156-1426-00	A	Motorola	MC68B40L/P	Multi Funct	1-2	CR
156-1427-00	A	Intel	P/D8288	Multi Funct	1-2	PP
156-1427-01	A	Intel	QD/D8288-S4244	Multi Funct	1-2	CR
156-1428-00	X	Intel	D8284A	Multi Funct		DL
156-1428-01	X	Intel	D8284A-S4245	Multi Funct		NP
156-1428-02	A	Intel	QD/D8284A	Multi Funct	1-2	CR
156-1429-00	A	NEC Micro	μPD444C	Mem Sel Guide	1-5	CR
156-1429-01	A	NEC America	UPD444	Mem Sel Guide	1-5	CR
156-1430-00	A	Natl Semic	MM74C911N/J	CMOS	1-10	CR
156-1431-00	A	Natl Semic	MM74C912N/J	CMOS	1-9	CR

* LACK OF ENTRY IN COLUMN INDICATES ITEM IS NOT LISTED IN MFR/TEK SECTION OF CATALOG. THIS INDICATES ITEM IS OBSOLETE, NOT RECOMMENDED FOR NEW DESIGN, OR OF LIMITED USE (SUCH AS SPECIALIZED CUSTOM MASK).

∞ NOT CURRENT VENDOR.

§§ FOR STATUS CODES, SEE PAGE 4-39.

INTEGRATED CIRCUIT PART NUMBER INDEX (CONT)

TEK PART NUMBER TO VENDOR NUMBER

PART NUMBER	** ND	VENDOR	VENDOR NO.	TYPE	* PAGE NO.	§§ ST
156-1432-00	N	Fairchild	74LS156PC/DC	TTL	1-16	CR
		Motorola	SN74LS156N/J			
		Signetics	N74LS156N/F			
		Texas Instr	SN74LS156N/J			
156-1432-01	N		74LS156	TTL	1-16	CR
156-1432-02	A	Fairchild	74LS156PCQR/DCQR	TTL	1-16	CR
		Motorola	SN74LS156NDS/JDS			
		Signetics	N74LS156NB/FB			
		Texas Instr	SN74LS156NP3/JP4			
156-1433-00	A	Natl Semic	MM5837N	MOS	1-13	CR
156-1434-00	A	Intel	P/D8035	Multi Funct	1-2	CR
156-1435-00	A	Intersil	ICL7107CPL	Spec Funct	2-2	CR
156-1436-00	A	Motorola	MC1404AU6DS	Linear	3-1	OB
156-1437-00	A	Motorola	MC1404AU5DS	Linear	3-1	CR
		Prec. Mono	REF02-0402			
156-1438-00	N	Texas Instr	TBP28S86N	Mem Sel Guide	1-7	CR
156-1439-00	A	Motorola	MC1403AUDS	Linear	3-1	OB
156-1440-00	U	Gen Elec	H22A5			CR
156-1441-00	A	TRW LSI Prod	1016J5C10	Spec Funct	2-2	CR
156-1441-01	N	Texas Instr	TMS9914ANL	Spec Funct	2-2	CR
156-1442-00	N	Intel	D8202	Multi Funct	1-2	PP
156-1443-00	A	Burr-Brown	2D158	Spec Funct	2-2	CR
156-1444-00	X	Texas Instr	TMS9914NL/JL	Multi Funct		LR
156-1444-01	A	Texas Instr	9914A-N	Multi Funct	1-3	CR
156-1444-02	A	Texas Instr	TMS9914AJL	Multi Funct	1-3	PP
156-1445-00	A	Motorola	MC68000L8	Multi Funct	1-2	CR
156-1445-01	A	Motorola	MC68000L6			CR
156-1445-02	A		68000L10	Multi Funct	1-2	CR
156-1446-00	A	Signetics	NE5533N	Op Amp	3-3	CR
156-1446-01	A	Signetics	NE5533AN	Op Amp	3-3	CR
156-1446-02	A	Exar	XR-5533N	Op Amp	3-3	CR
		Signetics	NE5533F			
156-1447-00	U	SonyTek	74S113			SC
156-1448-00	N	Fairchild	74LS490PC/DC	TTL	1-15	CR
		Texas Instr	SN74LS490N3/J4			
156-1448-01	A	Fairchild	74LS490PC01/DCQR	TTL	1-15	CR
156-1449-00	A	Plessey	SP8627DG/DP	ECL	1-12	CR
156-1450-00	N	RCA	CA3141E	Array	3-2	CR
156-1451-00	A	Natl Semic	LM337T	Linear	3-1	CR
156-1452-00	A	Natl Semic	DM74S287J	Mem Sel Guide	1-7	CR
156-1453-00	N	Monolithic	6301-1J	Mem Sel Guide	1-7	MP
156-1454-00	N	Natl Semic	DS8654N/J	TTL	1-17	CR
156-1454-01	N	Natl Semic	DS8654NA+/JA+	TTL	1-17	CR
156-1455-00	A	Intel	D/P8275	Multi Funct	1-2 & 13	CR
		∞Natl Semic	DS8275N/J			
156-1456-00	N	AMD	AM2502PC/DC	TTL	1-20	CR
		Intersil	AM2502CPE/CJE			
		Natl Semic	DM2502CN/J			
156-1457-00	A	Analog Dev	AD41127	Spec Funct	2-2	CR
156-1457-02	N		536A	Spec Funct	2-2	
156-1458-00	A	Motorola	MC6844P/L	MOS	1-13	PP
156-1458-01	A		MC6844PDS/LDS	MOS	1-13	PP
156-1459-00	A	Texas Instr	SN75162N/J	Multi Funct	1-3	CR
156-1460-00	A	Signetics	2661-2I/CP2752	Multi Funct	1-2	CR
156-1461-00	A	∞Fairchild	2114L2DC	Mem Sel Guide	1-6	CR
		Intel	D2114AL-4/S712			
156-1461-01		Intel	C2114AL	Mem Sel Guide	1-6	CR
156-1461-02						DL
156-1462-00	A	AMD	AM27S29DC	Mem Sel Guide	1-7	CR
156-1463-00	U	Harris	HD10117	ECL		SC
156-1464-00	U		8755A	MOS		SC
156-1465-00	X	Harris	HD74LS122	TTL		SC
156-1466-00	X	Harris	HD74LS123	TTL		SC
156-1467-00	U		8155	MOS		SC
156-1468-00	U	Signetics	NE522	Linear		SC
156-1469-00	U	Prec. Mono	DAC20CQ	Linear		SC
156-1470-00	U		TL082	Linear		SC
156-1471-00	U		IT400	Linear		SC
156-1472-00	U	RCA	CA3280	Linear		SC
156-1473-00	X		ICM7218A	CMOS		SC
156-1474-00	U	AMD	AM687	TTL		SC
156-1475-00	X		8255A-5	MOS		SC
156-1476-00	U	Motorola	MC10114	ECL		SC
156-1477-00	U		TL494	Linear		SC
156-1478-00	A	Motorola	MC14081BCL	CMOS	1-9	CR
		RCA	CD4081BF			
156-1478-01	X	Motorola	MC14081BCLDS	CMOS		CR
		RCA	CD4081BFX			
156-1479-00	N	AMD	DM81LS98PC/DC	TTL	1-14	CR
		Natl Semic	DM81LS98N/J			
156-1479-01	A	AMD	AM81LS98PCB/DCB	TTL	1-14	CR
		Natl Semic	DM81LS98JA+/JA+			
156-1480-00	X	Motorola	MC14075BCLDS	CMOS		OB
		Natl Semic	MM4075BCJA+			
		RCA	CD4075BFX			
156-1481-00	A	AMD	AM25LS22PCB/DCB	TTL	1-20	CR
		∞Fairchild	74LS322PC/DC			
		∞Texas Instr	SN74LS322N/J			
156-1482-00	U	∞MOS Tech	6504	Multi Funct	1-2	CR
		Rockwell	R6504P/C			
		Synertek	SYP/SYC6504			
156-1483-00	A	Intersil	ICL7106CPL	Spec Funct	2-2	CR
156-1484-00	X	EMM	35392C	Mem Sel Guide		LR
156-1485-00	U	Micro Elec	6U27A17	Op Amp		OB
156-1486-00	A	Motorola	MC14512BCLD	TTL	1-10	PP
		RCA	CD4512BFX			
156-1487-00	X	Motorola	MC14504BCLD	TTL		OB
156-1488-00	U	Micro Elec	6U27A18	Op Amp		OB
156-1489-00	U	Micro Elec	6U27A19	Op Amp		OB
156-1490-00	A	Intersil	ICL8069CCSQ	Linear	3-1	CR
156-1491-00		Gen Elec	H11F3			DL
156-1492-00	A	Analog Dev	AD542JH	Op Amp	3-4	CR
156-1492-01	A	Analog Dev	AD40764	Op Amp	3-4	CR
156-1493-00	U	Prec. Mono	DAC20EQ	Linear		SC
156-1494-00	A	∞AMD	S68B09D	Multi Funct	1-2	CR
		Amer Micro	S68B09D/E			
		Motorola	MC68B09S/L			
156-1494-01	A	Amer Micro	68B09D/E	Multi Funct	1-2	CR
		Motorola	MC68B09S/L			
156-1495-00	A	Fairchild	F10162DC	ECL	1-11	CR
		Motorola	MC10162L			
		Signetics	10162F			
156-1495-01						SC
156-1496-00	A	Fairchild	F100155FC	ECL	1-11	CR
		Signetics	100155D			
156-1496-01						PP
156-1497-00	A	Fairchild	F100150FC	ECL	1-12	CR
		Signetics	100150D			
156-1498-00	A	Fairchild	F100117FC	ECL	1-12	PP
		Signetics	100117D			
156-1499-00	A	Fairchild	F100112FC	ECL	1-12	CR
		Signetics	100112D			
156-1499-01	A		100112FC	ECL	1-12	PP
156-1500-00	A	Fairchild	F100107FC	ECL	1-12	CR
		Signetics	100107D			
156-1500-01						PP
156-1501-00	A	Fairchild	F100151FC	ECL	1-11	PP
		Signetics	100151D			
156-1501-01						PP
156-1502-00	A	Fairchild	F100171FC	ECL	1-11	CR
		Signetics	100171D			
156-1503-00	A		AD581LH	Linear	3-1	PP
156-1504-00	A	Fairchild	F100170FC	ECL	1-11	PP
		Signetics	100170D			
156-1505-00	A	Fairchild	F100166DC	ECL	1-11	CR
		Signetics	100166F			
156-1506-00	A	Fairchild	F100160DC	ECL	1-12	CR
		Signetics	100160F			
156-1507-00	A	Fairchild	F100180FC	ECL	1-11	CR
		∞Signetics	100180Y			
156-1508-00	A	Fairchild	F100180DC	ECL	1-11	CR
		∞Signetics	100180F			

** NEW DESIGN RECOMMENDATION FROM COMPONENT ENGINEERING:

A = Acceptable
N = Not Recommended
X = Undefined
U = Do Not Use

INTEGRATED CIRCUIT PART NUMBER INDEX (CONT)

TEK PART NUMBER TO VENDOR NUMBER

PART NUMBER	** ND	VENDOR	VENDOR NO.	TYPE	* PAGE NO.	§§ ST
156-1509-00	A	Fairchild	F100171DC	ECL	1-11	CR
		Signetics	100171F			
156-1510-00	A	Fairchild	F100155DC	ECL	1-11	CR
		Signetics	100155F			
156-1511-00	A	Fairchild	F100141DC	ECL	1-12	CR
		Signetics	100141F			
156-1512-00	A	Fairchild	F100151DC	ECL	1-11	CR
		Signetics				
156-1513-00	A	Fairchild	F100145FC	ECL	1-12	CR
		Signetics	100145D			
156-1514-00	A	Fairchild	F100145DC	ECL	1-12	PP
		Signetics	100145F			
156-1515-00	A	Fairchild	F100122FC	ECL	1-11	CR
		Signetics	100122D			
156-1515-01						PP
156-1516-00	A	Fairchild	F100122DC	ECL	1-11	CR
		Signetics	100122F			
156-1517-00	A	Fairchild	F100136DC	ECL	1-12	CR
		Signetics	100136F			
156-1518-00	A	Fairchild	F100107DC	ECL	1-12	CR
		Signetics	100107F			
156-1519-00	A	Fairchild	F100102DC	ECL	1-12	CR
		Signetics	100102F			
156-1520-00	A	Fairchild	F100101DC	ECL	1-12	CR
		Signetics	100101F			
156-1521-00	A	Fairchild	74LS352PCQR/DCQR	TTL	1-15	CR
		T xas Instr	SN74LS352NP3/JP4			
156-1523-00	A	Fairchild	75110APC/DC	TTL	1-16	CR
		Texas Instr	SN75110AN/J			
156-1524-00	X		74S225J	TTL		DL
156-1525-00	A	AMD	AMZ8001ADC	Multi Funct	1-2	CR
		Zilog	Z8001ADS			
156-1526-00	A	Signetics	N82LS181	Mem Sel Guide	1-7	CR
156-1527-00	A	RCA	CA3183AE	Array	3-2	CR
		Sprague Elec	ULN2083A-1			
156-1528-00	A	Sprague Elec	UHP-408	TTL	1-16	CR
156-1529-00	A	Motorola	LM317LZ	Linear	3-1	CR
156-1530-00	A	Rockwell	R6531P-098	Multi Funct	1-2	CR
156-1531-00	A	Intel	QC/QD8755A	Multi Funct	1-2	CR
156-1532-00	A	Micro Power	MP5510-CY5004	Op Amp	3-4	OB
		Prec. Mono	OP-10-057Y			
156-1533-00	A	Natl Semic	ADC0801LCD/A+	Spec Funct	2-2	CR
156-1534-00	A	Burr-Brown	DAC72/DAC70-CCD-I	Spec Funct	2-2	CR
156-1534-01	A	Burr-Brown	DAC71-CCD-I	Spec Funct	2-2	PP
156-1535-00	A	AMD	AM8279-5N/J	Multi Funct	1-2	CR
		Intel	8279-5			
156-1537-00	A	Prec. Mono	OP-11050Y	OP Amp	3-4	CM
156-1538-00	A	Fairchild	F10171DC	ECL	1-11	PP
		Motorola	MC10171L			
		Signetics	10171F			
156-1539-00	A	Synertek	SYP6522	Multi Funct	1-2	CR
156-1540-00	A	Fairchild	FSA2619P	Array	3-2	CM
156-1541-00	X		AY-5-2376			NP
156-1542-00	X		74276	TTL		DL
156-1543-00	A	Prec. Mono	REF-02CJ	Linear	3-1	CM
156-1544-00	N	Fairchild	9616EDC	TTL	1-17	CR
156-1545-00	A	Fairchild	FSA2720M	Array	3-2	CR
156-1546-00	A	AMD	AM25LS2538PCB/DCB	TTL	1-16	CR
156-1547-00	A	Fairchild	74S258DCQR	TTL	1-15	CR
		Signetics	74S258FB			
		Texas Instr	SN74S258JP4			
156-1548-00	A	Micro Power	MP7621KN	Spec Funct	2-2	CR
		Teledyne	8641CJ			
156-1549-00	A	Motorola	MC6840PDS/LDS	Multi Funct	1-2	CR
156-1550-00	A	AMD	AM9513PCTB/DCTB	Multi Funct	1-2	CR
156-1551-00	N	RCA	90593	Op Amp	3-5	CR
156-1552-00	A	Hitachi	HM4816A-4/DG16B	Mem Sel Guide	1-4	CR
		Intel	D2118-4			
156-1553-00	A	SDS Electron	XSD5002CM	Array	3-2	CR
		Semi Process	5S021			
		Sertech Labs	XSD5002CM			
		Signetics	XSD5002CM			
156-1554-00	A	Fairchild	F100170DC	ECL	1-11	PP
		Signetics	100170F			
156-1555-00	A	AMD	AM6080PC	Spec Funct	2-2	CR
156-1556-00	A	Motorola	MC14543BCLDS	CMOS	1-9 & 10	CR
		Natl Semic	CD4543JA+			
156-1557-00	A	Fairchild	F100163FC	ECL	1-11	CR
		Signetics	100163Y			
156-1558-00	A	AMD	AMZ8002ADC	Multi Funct	1-2	CR
		Zilog	Z8002A			
156-1559-00	N	Motorola	MCM68764C/L	Mem Sel Guide	1-7	CR
156-1560-00	A	Monolithic	6309-1/J20	Mem Sel Guide	1-7	CR
156-1561-00	A	Fairchild	F10018FC	ECL	1-12	PP
		Signetics	100118D			
156-1563-00	A	Fairchild	F100136FC	ECL	1-11 & 12	PP
		Signetics	100136D			
156-1563-01						PP
156-1564-00	A	Analog Dev	AD521KD	Op Amp	3-4	OB
156-1565-00	A	AMD	AM2940DC	Multi Funct	1-2	CR
156-1566-00	N	Gen Instr	ER1400	Mem Sel Guide	1-7	PP
		Mitsubishi	M5G1400P			
156-1568-00	A	RCA	CD40103BFX	CMOS	1-9	CR
156-1569-00	A	Motorola	MPQ3467	Array	3-2	CR
		Natl Semic	DH3467CN			
156-1570-00	A	AMD	AM8255APCB/DCB	Multi Funct	1-2	CR
		Intel	P/D8255A			
156-1570-01	A	AMD	AM8255A-5P/DCB	Multi Funct	1-2	PP
		Intel	QP/QC8255A-5			
156-1571-00	A	Natl Semic	ADC1211HCD	Spec Funct	2-2	CR
156-1572-00	A	Signetics	2653I/N	Multi Funct	1-2	CM
156-1573-00	A	∞Fairchild	74S134DCQR	TTL	1-18	CR
		Natl Semic	DM74S134NA+/JA+			
		Signetics	N74S134NB/FB			
		Texas Instr	SN74S134NP3/JP4			
156-1574-00	A	Intel	D2148HL-3	Mem Sel Guide	1-6	CR
156-1575-00	N	Mostek	MK4118AP/J-i	Mem Sel Guide	1-6	CR
156-1578-00	N	Fujitsu-Amer	MB7071H	Mem Sel Guide	1-5	LR
156-1579-00	X	Motorola	MC68701L	Multi Funct		DL
156-1579-01						DL
156-1580-00	A	Intel	D2148HL	Mem Sel Guide	1-6	PP
156-1581-00	A	Fairchild	F100150DC	ECL	1-12	PP
156-1582-00	A	Prec. Mono	OP0720C2	Op Amp	3-4	OB
156-1583-00						SC
156-1584-00	N	Texas Instr	SN74S124NP3/JP4	TTL	1-20	PP
156-1585-00	A	Silicon Gen	SG10083/3526J	Linear	3-1	CR
156-1585-01	A		SG3526	Linear	3-1	
156-1586-00	A	Analog Dev	AD589JH	Linear	3-1	CR
		∞Intersil	ICL8069DC			
156-1586-01						PP
156-1587-00	X	Texas Instr	SN74402NP3/JP4	TTL		CR
156-1588-00	A	Prec. Mono	OP-20GBC	Op Amp	3-4	CR
156-1588-01	A		OP-20	Op Amp	3-4	CR
156-1589-00	A	AMD	AM6012PC	Spec Funct	2-2	PP
156-1590-00	A	TRW, Inc.	TDS5318	Spec Funct	2-2	PP
156-1590-01						DL
156-1591-00	A	Motorola	MCM68B10SD	Mem Sel Guide	1-6	CR
156-1592-00	A	Fairchild	F10123DC	ECL	1-12	CR
		Motorola	MC10123L			
		Signetics	10123F			
156-1593-00	A	Fairchild	SL92104	Spec Funct	2-3	PP
156-1593-01	A		CCS321A	Spec Funct	2-3	PP
156-1594-00	A	Hitachi	HM6116P-3/DP-24	Mem Sel Guide	1-6	CR
		∞Mostek	6116P-3			
156-1595-00	A	Datel-Intsl	ADC-EK10B	Spec Funct	2-2	PP
		Teledyne	8701CN			
156-1596-00	A	Hitachi	HN462532-DC-24C	Mem Sel Guide	1-7	PP
156-1597-00	A	AMD	AMZ8103PC/DC	TTL	1-17	CR
		Natl Semic	DP8303N/J			
156-1598-00	A	Fujitsu-Amer	MBM2732A-30C	Mem Sel Guide	1-7	CR
		Intel	D2732A-3/S6699			
156-1599-00	U	Intel	D8202A	Mem Sel Guide	1-2	CR
156-1600-00	A	Hitachi	HD74LS123	TTL	1-19	CR
		Motorola	SN74LS123NDS/JDS			
		Texas Instr	SN74LS123NP3/JP4			
156-1601-00	A	Natl Semic	MM58167AN/D	Multi Funct	1-2	CR

* LACK OF ENTRY IN COLUMN INDICATES ITEM IS NOT LISTED IN MFR/TEK SECTION OF CATALOG. THIS INDICATES ITEM IS OBSOLETE, NOT RECOMMENDED FOR NEW DESIGN, OR OF LIMITED USE (SUCH AS SPECIALIZED CUSTOM MASK).

∞ NOT CURRENT VENDOR.

§§ FOR STATUS CODES, SEE PAGE 4-39.

INTEGRATED CIRCUIT PART NUMBER INDEX (CONT)

TEK PART NUMBER TO VENDOR NUMBER

PART NUBMER	** ND	VENDOR	VENDOR NO.	TYPE	* PAGE NO.	§§ ST
156-1602-00	A	Intel	D2816-3	Mem Sel Guide	1-7	CR
156-1603-00	A	Intel	D2764-3	Mem Sel Guide	1-7	CR
156-1604-00	N	Fairchild	UA79M12AHC	Linear	3-1	CM
		Natl Semic	LM79M12CH			
156-1605-00	N	Digital Eq	DC01019.14038	Multi Funct	1-2	CR
156-1606-00	A	AMD	AM9517A-5DC	Multi Funct	1-2	CR
		Intel	C/D8237A-5			
156-1607-00	N	∞Fairchild	UA1558RM	Op Amp	3-3	CR
		∞Motorola	MC1558U			
		RCA	CA1558G			
		Texas Instr	MC1558JG			
156-1608-00	A	AMD	AM27S181D-24-1	Mem Sel Guide	1-7	CR
156-1609-00	A	RCA	D8088	Multi Funct	1-2	CR
156-1609-01	A		D8088-2	Multi Funct	1-2	MP
156-1610-00	A	Motorola	MCM68766C35	Mem Sel Guide	1-7	CR
156-1611-00	A	Fairchild	74F74PC/DC	TTL	1-17	CR
156-1612-00	A	Mostek	MK3881N-4/P-4MKX	Multi Funct	1-2	CR
		Zilog	Z80A-PIO			
156-1613-00	A	AMD	AM21L47-55D-C	Mem Sel Guide	1-6	CR
		Hitachi	HM6147G-3			
		∞Intel	D2147HL-3			
156-1614-00	A	Intel	D2114AL-3	Mem Sel Guide	1-6	CR
156-1615-00	A	INMOS	IMS1400-55	Mem Sel Guide	1-6	CR
		NEC America	UPD2167-3			
156-1616-00	N	Fairchild	HL78937	TTL	1-14	CR
156-1617-00	A	Texas Instr	SN74AS804N/J	TTL	1-16	CR
156-1618-00	A	AMD	AM2908DCB/PCB	TTL	1-16	CR
156-1619-00	A	Fairchild	74LS126PCQR/DCQR	TTL	1-14	CR
		Motorola	SN74LS126NDS/JDS			
		Natl Semic	DM74LS126NA+/JA+			
		Signetics	N74LS126NB/FB			
156-1620-00	A	Mostek	MK3882N-41P-4MKX	Multi Funct	1-2	CR
		Zilog	Z80ACTC			
156-1621-00	A	Intersil	ICM7218AIJI	CMOS	1-9	PP
156-1622-00	A	Intersil	ICM7818BIPI	CMOS	1-9	PP
156-1623-00	A	Analog Dev	AD41201	Spec Funct	2-2	PP
156-1624-00	N	Digital Eq	KEF11-A	MOS	1-13	CR
156-1625-00	A	Intel	D2732A	Mem Sel Guide	1-7	CR
156-1625-01	A	Intel	D2732A	Mem Sel Guide	1-7	CR
156-1626-00	A	Hitachi	HM4864-3DC	Mem Sel Guide	1-4	CR
		Intel	D2164A-20			
156-1627-00	A	∞Fairchild	UA494PC	Linear	3-1	CR
		∞Motorola	TL494CN			
		Texas Instr	TL594CN			
156-1628-00	A	Monolithic	63S141J/D (SHRP)	Mem Sel Guide	1-7	PP
156-1629-00	A	Natl Semic	DM74S113NA+/JA+	TTL	1-17	CR
		Signetics	N74S113NB/FB			
		Texas Instr	SN74S113NP3/JP4			
156-1630-00	A	Intel	D2764-4	Mem Sel Guide	1-7	PP
156-1631-00	A	Fairchild	UA431WC	Linear	3-1	CR
		Texas Instr	TL431C-LP			
156-1632-00	A	Hitachi	HM6116LP-4	Mem Sel Guide	1-5	PP
		∞Toshiba	TC5516AP			
156-1633-00	A	AMD	AM27S03ADCB	Mem Sel Guide	1-5	CR
156-1634-00	A	AMD	AM25S09PCB/DCB	TTL	1-20	CR
		Fairchild	74F399PCQR/DCQR			
156-1635-00	N	Fujitsu	MBM10422	Mem Sel Guide	1-5	PP
		Hitachi	HM10422			
156-1636-00	N	Texas Instr	SBP9989CJ-1	Multi Funct	1-2	CR
156-1637-00		Monolithic	PAL16R6CN/CJ	TTL	1-18	PP
		Natl Semic	PAL16R6			
156-1638-00	A	Prec. Mono	DAC10GX	Spec Funct	2-2	PP
156-1639-00	A	Motorola	MC10H131L/P	ECL	1-11	PP
156-1639-01	A	Motorola	MC10H131LD/PD	ECL	1-11	PP
156-1640-00	A	Motorola	MC10H116L/P	ECL	1-12	PP
156-1640-01		Motorola	MC10H116LD/PD	ECL	1-12	PP
156-1641-00	A	Motorola	MC10H102L/P	ECL	1-11	CR
156-1641-01	A	Motorola	MC10H102LD/PD	ECL	1-11	PP
156-1642-00	A	Motorola	MC10H105L/P	ECL	1-11	PP
156-1642-01	A	Motorola	MC10H105LD/PD	ECL	1-11	PP
156-1643-00	A	Intel	D8087	MOS	1-13	PP
156-1644-00	A	Motorola	LM11CLH	Op Amp	3-4	PP
		Natl Semic	LM11CLH			
156-1645-00	N	Fairchild	96S02PCQR/DCQR	TTL	1-19	PP
156-1646-00	A	Mitel	MC74SC374AC	CMOS	1-9	CR
156-1647-00	A	Motorola	MC3431L/P	Spec Funct	2-3	CR
		Natl Semic	DS3651J/N			
156-1649-00	A	Exar	XR6118	TTL	1-16	PP
		Sprague	UDN-6118A			
156-1650-00	A	Fairchild	11C01FC	ECL	1-11	PP
		Motorola	SC63501F			
156-1651-00	A	AMD	AM2732-/DC	Mem Sel Guide	1-7	CR
156-1652-00	A	Intel	D2764	Mem Sel Guide	1-7	CR
		Fujitsu	MBM2764-25			
156-1653-00	A	Sanyo	STK457	Op Amp	3-5	PP
156-1654-00	A	XICOR	X2201	Mem Sel Guide	1-4	CR
156-1655-00	A	Intersil	ICM7226BIPL	CMOS	1-9	PP
156-1656-00	A	Intel	C/D8274	Multi Funct	1-2	PP
156-1657-00	A	Motorola	MC10194PD/LD	ECL	1-12	PP
156-1658-00		Monolithic	PAL16R8CJ/CN	TTL	1-18	PP
156-1659-00		Monolithic	PAL16R4CJ/CN	TTL	1-18	PP
156-1660-00	A	Motorola	MC68121L	Multi Funct	1-2	PP
156-1661-00	U		74LS646	TTL	1-16	PP
156-1662-00	A	Fairchild	74F153PCQR/DCQR	TTL	1-15	PP
156-1663-00	A		74F11	TTL	1-18	PP
156-1664-00	U		74ALS574	TTL	1-17	PP
156-1666-00	U	Fairchild	96LS488DC	Multi Funct	1-3	PP
156-1667-00	A	Motorola	MC10H164LD/P	ECL	1-11	PP
156-1668-00	A	Motorola	MC10H101LD/PD	ECL	1-11	PP
156-1669-00		Monolithic	PAL14LCN/CJ	TTL	1-18	PP
		Natl Semic	PAL14L4N/J			
156-1670-00	A	Fairchild	F100125DC	ECL	1-12	PP
156-1671-00	A		100124	ECL	1-12	PP
156-1672-00	A	AMD	AMD27S291DC	Mem Sel Guide	1-7	PP
156-1673-00	A	Motorola	MCM10149L	Mem Sel Guide	1-7	PP
156-1674-00	A	Motorola	MC10H104LD/PD	ECL	1-11	PP
156-1675-00	A	AMD	AMD25S191ADC	Mem Sel Guide	1-7	PP
156-1676-00	A	Motorola	MC10107LD/PD	ECL	1-11	PP
156-1678-00	A	Fairchild	F100165DC	ECL	1-12	PP
		Hitachi	HD100165C			
156-1679-00	A	Fujitsu	MBM10474	Mem Sel Guide	1-5	PP
		Hitachi	HM10474-1			
156-1680-00	U		74S15	TTL	1-18	PP
156-1681-00	A	AMD	AM26LS31OCB	TTL	1-16	PP
156-1682-00	A	Motorola	MC10H109LD/PD	ECL	1-11	PP
156-1683-00	A	Motorola	MC6803-G1/L1	Multi Funct	1-2	CR
156-1684-00	A	Intel	CI/DI8031	Multi Funct	1-2	PP
156-1685-00	A	Hitachi	HM2112-1	Mem Sel Guide	1-5	PP
156-1686-00	N	Motorola	MCM68764-C35	Mem Sel Guide	1-7	PP
156-1687-00	A	AMD	AMD27S191DC	Mem Sel Guide	1-7	CR
156-1688-00	A	Natl Semic	LF412ACN	Op Amp	3-4	CM
		Texas Instr	TL287CP			
156-1690-00	A	AMD	2147-45DC	Mem Sel Guide	1-6	PP
		Intel	2147H-2			
156-1691-00	U		74ALS564	TTL	1-17	PP
156-1692-00	A	Texas Instr	TIM9904AJL	Multi Funct	1-2	PP
156-1693-00	A	SGS	TDA1170	Linear	3-1	PP
156-1693-01	A		TDA1170	Linear	3-1	PP
156-1694-00	N	Inmos	IMS1420S-55	Mem Sel Guide	1-6	PP
156-1695-00	A	Intel	P21149H-2	Mem Sel Guide	1-6	PP
156-1696-00	A	Intel	D27128-3	Mem Sel Guide	1-7	PP
156-1697-00	U		8203-3	Multi Funct	1-2	PP
156-1698-00	N		10H116	ECL	1-12	PP
156-1699-00		Natl Semic	LF412CN	Op Amp	3-4	PP
		Texas Instr	TL288CP			
156-1702-00	U		29821	TTL	1-19	PP
156-1703-00	U		74AS881	TTL	1-14 & 19	PP
156-1704-00	A		74F374	TTL	1-17	PP
156-1705-00	U		74F283	TTL	1-14	PP
156-1706-00	N	Toshiba	TC5516APL	Mem Sel Guide	1-5	PP
156-1707-00	U		74F00	TTL	1-18	PP
156-1708-00	N		74273	TTL	1-17	PP

** NEW DESIGN RECOMMENDATION FROM COMPONENT ENGINEERING:

A = Acceptable
N = Not Recommended
U = Undefined
X = Do Not Use

INTEGRATED CIRCUIT PART NUMBER INDEX (CONT)

TEK PART NUMBER TO VENDOR NUMBER

PART NUMBER	ND **	VENDOR	VENDOR NO.	TYPE	PAGE NO. *	ST §§
156-1709-00	A	Motorola	MC1350P	Linear	3-1	PP
156-1710-00	A	Motorola	MC10H117PD/LD	ECL	1-11	PP
156-1711-00	A	Motorola	MC10H210	ECL	1-12	PP
156-1712-00	A	Motorola	MC10H176PD/LD	ECL	1-11	PP
156-1713-00	A	Motorola	MC10198P/L	ECL	1-12	PP
156-1714-00	U		74F191	TTL	1-15	PP
156-1717-00	A		RDD104	CMOS	1-9	PP
156-1718-00	A	Motorola	MC145155P	Spec Funct	2-3	PP
156-1719-00	A	Natl Semic	LM10CN	Op Amp	3-5	PP
156-1720-00	A		68B09E	Multi Funct	1-2	PP
156-1721-00	U		74F373	TTL	1-19	PP
156-1722-00	U		74F04	TTL	1-14	PP
156-1723-00	U		74F08	TTL	1-18	PP
156-1724-00	U		74F32	TTL	1-18	PP
156-1725-00	U	Fairchild	74F245PCQR/DCQR	TTL	1-14 & 16	PP
156-1726-00	U		74F139	TTL	1-16	PP
156-1727-00	U		74F138	TTL	1-16	PP
156-1729-00	U		25LS2520	TTL	1-17	PP
156-1730-00	A		8155	Multi Funct	1-2	PP
156-1732-00	U		74LS461	TTL	1-15	PP
156-1733-00	A	Motorola	MC10H101PD/LD	ECL	1-11	PP
156-1734-00	N	Intel	2186	Mem Sel Guide	1-6	PP
156-1735-00	A	Intel	D2817-4	Mem Sel Guide	1-7	PP
156-1736-00	A		AM29824	Multi Funct	1-3 & 19	PP
156-1737-00	U		SC2681	Multi Funct	1-2	PP
156-1738-00	U		2953	Multi Funct	1-2	PP
156-1739-00	A		8647	ECL	1-12	PP
156-1740-00	U	AMD	AM2966DCB	Multi Funct	1-2	PP
156-1741-00		Analog Dev	AD542LH	Op Amp	3-4	PP
156-1742-00	A	Motorola	MC145146L	Spec Funct	2-3	PP
156-1743-00	U	Fairchild	74F02PCQR/DCQR	TTL	1-18	MP
156-1744-00	U		74F240	TTL	1-14 & 16	MP
156-1745-00	U		74F241	TTL	1-14 & 16	MP
156-1746-00	U		74F151	TTL	1-15	MP
156-1747-00	U		26S10	TTL	1-16	MP
156-1748-00	U		74ALS245	TTL	1-14 & 16	PP
156-1748-01	U		74ALS245-1	TTL	1-14 & 16	PP
156-1749-00	U		2964B	Multi Funct	1-2	PP
156-1750-00	A		74HC160	CMOS	1-9	PP
156-1751-00	U		74F64	TTL	1-18	PP
156-1752-00	U		74F10	TTL	1-18	PP
156-1753-00	U		74ALS240	TTL	1-14 & 16	PP
156-1753-01	U		74ALS240-1	TTL	1-14 & 16	PP
156-1754-00	U		74ALS1244	TTL	1-16	PP
156-1755-00	U		74ALS109	TTL	1-17	PP
156-1756-00	U		74ALS74	TTL	1-17	PP
156-1757-00	U		74ALS569	TTL	1-15	PP
156-1758-00	U		74ALS112	TTL	1-17	PP
156-1759-00	U		74ALS133	TTL	1-18	PP
156-1760-00	A		2030H	Op Amp	3-5	PP
156-1761-00	U		74LS450	TTL	1-15	PP
156-1762-00	A		74HC161	CMOS	1-9	PP
156-1763-00	A		9007P	Multi Funct	1-2	EN
156-1785-00	A		6545A	Multi Funct	1-2	PP
156-1786-00	A	Hitachi	HM4334P-3	Mem Sel Guide	1-5	PP
156-1787-00	A	Motorola RCA	MCI4082BCLD CD4082BFX	CMOS	1-9	PP
156-1788-00	A	Natl Semic Prec Mono	LF135C9 MUX24FQ	Spec Funct	2-3	PP
156-1789-00	A		LF198	Spec Funct	2-3	PP
156-1790-00	A	Natl Semic Silicon Gen	LM211H SG211T	Spec Funct	2-3	PP
156-1791-00	A	Natl	LF298H	Spec Funct	2-3	PP
156-1792-00	A		25L04	TTL	1-20	PP
156-1793-00	A		Z8087	MOS	1-13	PP
156-1794-00	A		10H121	ECL	1-12	PP
156-1795-00	A		10H174	ECL	1-11	PP
156-1796-00	A		10159	ECL	1-11	PP
156-1797-00	A		100112F	ECL	1-12	PP
156-1798-00	N	Hitachi	HM4816AP-7	Mem Sel Guide	1-4	PP
156-1799-00	A		MC3423U	Linear	3-1	PP
156-1800-00	U		74F86	TTL	1-18	PP
156-1801-00	A		PAL10L8	TTL	1-19	PP
156-1802-00	A		PAL12L10	TTL	1-19	PP
156-1803-00			HAL12L10	Array		PP
156-1804-00			HAL10L8	Array		PP
156-1805-00			HAL16R8	Array		PP
156-1806-00			HAL16L8	Array		PP
156-1807-00			HAL16L2	Array		PP
156-1808-00	A		PAL16L2	TTL	1-19	PP
156-1809-00	A		PAL16L8	TTL	1-19	PP
156-1810-00	A		MC1416P	Array	3-2	PP
156-1811-00	A		HS3120C-2	Spec Funct	2-2	PP
156-1812-00	A		MC1400U6	Linear	3-1	PP
156-1813-00	U	Elec Design	EDH4528-20	Mem Sel Guide	1-4	PP
156-1814-00	A	AMD	AM27519	Mem Sel Guide	1-7	PP
156-1815-00			AD7528			SC
156-1816-00			UPC4359C			SC
156-1817-00			TC5565P	CMOS		SC
156-1818-00			TC40H393P	CMOS		SC
156-1819-00			TC40H368P	CMOS		SC
156-1820-00			TC40H367P	CMOS		SC
156-1821-00			TC40H365P	CMOS		SC
156-1822-00			TC40H259P	CMOS		SC
156-1823-00			TC40H175P	CMOS		SC
156-1824-00			TC40H157P	CMOS		SC
156-1825-00			TC40H153P	CMOS		SC
156-1826-00			TC40H139P	CMOS		SC
156-1827-00			TC40H138P	CMOS		SC
156-1828-00			TC40H074P	CMOS		SC
156-1829-00			TC40H032P	CMOS		SC
156-1830-00			TC40H011P	CMOS		SC
156-1831-00			TC40H002P	CMOS		SC
156-1832-00			74ALS10			SC
156-1833-00			STC7	Linear		SC
156-1834-00			STU004	Linear		SC
156-1835-00			STU003	Linear		SC
156-1836-00			STU002	Linear		SC
156-1837-00			M54533	Linear		SC
156-1838-00			AD545KH	Op Amp	3-4	PP
156-1839-00	U		AM2952	Multi Funct	1-2	PP
156-1840-00	U		AM29827	TTL	1-14	PP
156-1841-00			80186			PP
156-1842-00			HM6264P-15	CMOS		PP
156-1843-00			OP-14EP	Op Amp		PP

§§ STATUS CODES

CR	Current Production
§ EN	Engineering
PP	Pre-Prod
§ CS	Customer Service
§ NP	Non-Prod
§ CL	Cancelled
§ DL	Deleted
§ OB	Obsolete Instrument
CM	Custom Mod Instrument
§ DS	Digital Systems
§ OT	Obsolescent Instrument
MP	Modified Part
LR	Last Supply Current
LS	Last Supply Customer Service
VN	Vendor
TC	Telequipment Current Prod.
IN	International
SC	Sony/Tek Current Prod.

THE STATUS IN THIS CATALOG WAS CORRECT AT THE TIME IT WAS PUBLISHED, BUT IT IS SUBJECT TO CHANGE.

§ TO USE A PART WITH THIS STATUS ON A NEW INSTRUMENT REQUIRES THAT A NEW PURCHASED PART INITIATION FORM (PPIF) BE INITIATED.

(A GLOSSARY OF TERMS FOR THESE STATUS CODES CAN BE FOUND ON PAGE 0-44).

* LACK OF ENTRY IN COLUMN INDICATES ITEM IS NOT LISTED IN MFR/TEK SECTION OF CATALOG. THIS INDICATES ITEM IS OBSOLETE, NOT RECOMMENDED FOR NEW DESIGN, OR OF LIMITED USE (SUCH AS SPECIALIZED CUSTOM MASK).

∞ NOT CURRENT VENDOR.

VENDOR NUMBER TO TEK PART NUMBER INDEX

INTEGRATED CIRCUITS

4

VENDOR NUMBER	PART NUMBER
MJUMKJ	156-0615-01
MAN1	156-0126-00
DAC-01CP	156-0164-00
OP-02CP	156-0067-08
REF-02CJ	156-1543-00
CGR001	156-0147-00
stu001	156-1165-00
STU002	156-1836-00
STU003	156-1835-00
CGR0003	156-0882-00
STU004	156-1834-00
STC7	156-1833-00
DAC-08HQ	156-1255-00
DAC-08HQDS	156-1255-01
DAC-08HQQB	156-1255-01
MUX08FQ	156-1270-00
OP-08FP	156-0854-00
DAC10GX	156-1638-00
LM10CN	156-1719-00
KEF11-A	156-1624-00
KEV11	156-0884-00
LM11CLH	156-1644-00
OP-11EY	156-1537-00
SMP11FY	156-1312-00
OP-14EP	156-1843-00
PAL14LCN/CJ	156-1669-00
OP-20GBC	156-1588-00
OP-20	156-1588-01
LM0022CH	156-0484-00
MUX24FQ	156-1788-00
DS0025CN	156-0338-00
DS0026CN	156-0328-01
MH0026CN	156-0328-00
AM27	156-1213-00
LH0033CT	156-0475-00
LH0042CH	156-0335-00
LH0042CH	156-0335-01
TL062CP/PEP3	156-1291-00
DAC71-CCD-I	156-1534-00
DAC72/DAC70-CCD-I	156-1534-00
TL072ACP	156-1191-00
TL074CN	156-1200-00
TL074CN/PEP3	156-1200-01
DAC-80-CBI-V	156-0959-00
DAC-80-CBI-V	156-0959-01
ADC080	156-1307-00
ADC080I	156-1533-00
Z80A-CPU-PS	156-0983-02
Z80A-SIO/1CS	156-1424-00
Z80A-PIO	156-1612-00
Z-80A	156-0983-00
Z-80A	156-0983-02
TO-92	156-1192-00
RDD104	156-1717-00
PAL10L8	156-1801-00
HAL10L8	156-1804-00
LD110CJ	156-0476-00
AO-111	156-0709-00
LD111	156-0477-00
LD111ACJ	156-1268-00
LD111A	156-1268-01
AMM112	156-0608-00
H11F3	156-1491-00
SCS11C6	156-1238-00
EA120	156-0215-00
LD120CJ	156-1306-00
LD121CJ	156-1305-00
PAL14L4NJ	156-1669-00
UPB147D	156-1418-00
UPC151C	156-1155-00
UPC151D	156-0067-12
UPC151D	156-0067-13
HAL16L2	156-1807-00
PAL16L2	156-1808-00
PAL16R4CJ/CN	156-1659-00

VENDOR NUMBER	PART NUMBER
PAL16R6CN/J	156-1637-00
HAL16L8	156-1806-00
HAL16R8	156-1805-00
PAL16L8	156-1809-00
PAL16R8CJ/CN	156-1658-00
171J	156-0532-00
DG181BA	156-1236-00
LF198	156-1789-00
DG201ACJ	156-0858-00
NATLM201	156-0027-00
ADC211HCD	156-1571-00
LM211H	156-1790-00
SG211T	156-1790-00
H21A2	156-1237-01
H22T	156-1440-00
UPC251D	156-0158-04
ATF267	156-0474-00
TL287CP	156-1688-00
TL288CP	156-1699-00
IL/296	156-1366-00
DI-297N	156-0342-00
LF298H	156-1791-00
SP300A	156-0270-00
CA301AG	156-0105-00
CA301AJG	156-0105-02
LA301A	156-0077-01
LM301AH	156-0077-00
LM301AJG(4)	156-0105-04
LM301AN	156-0105-00
LM301AN	156-0105-01
LM301AP	156-0105-00
LM301AJDS	156-0105-02
µPC301AC	156-0105-00
302	156-0060-01
LM302H	156-0060-00
TIXL302	156-0126-00
308AY	156-0512-02
LM308	156-0223-01
LM308AN	156-0854-00
LM308AJ-(8/A+)	156-0854-01
LM308AJ-(8/A+)	156-0854-02
LM308H	156-0223-00
LM308N	156-0512-00
SG308Y	156-0512-03
SG308AY	156-0854-00
SG308AY	156-0854-01
LM308N	156-0512-01
LM308(J-8)	156-0512-03
LM308(J-8)A+	156-0512-02
MLM308UDS	156-0512-02
LM309K	156-0176-00
LM311	156-0096-01
LM311H/A+	156-0096-00
LM311H	156-0096-01
LM311H	156-0096-02
LM311JG(4)	156-1126-01
LM311L	156-0096-00
LM311P	156-1126-00
SG311M	156-1126-00
SG311T	156-0096-00
SG311T	156-0096-02
µPC311C	156-1126-00
SP317A	156-0271-00
UA317UC	156-1161-00
LM317LZ	156-1529-00
LM317T	156-1161-00
318	156-0742-03
LM318N	156-0742-00
LM318P	156-0742-00
LM318N	156-0742-01
LM318(P3)	156-0742-02
LM318N/A+	156-0742-02
AM319D	156-1226-00
LM319J	156-1226-00
LM319FH	156-1226-00

VENDOR NUMBER	PART NUMBER
LM319H	156-0570-00
LM319HG	156-0570-01
LM319J/A+	156-1226-01
CCD321A	156-1593-00
CCS321A	156-1593-00
LM321AH/A+	156-0918-00
LM321H	156-0420-00
CY323	156-0172-00
LM323K	156-0684-00
324J	156-0495-02
CA324G	156-0495-00
LM324	156-0495-03
LM324N	156-0495-00
LM324NJ4	156-0495-02
LM324J/A+	156-0495-02
LS324N	156-0495-01
UPC324C	156-0495-00
LM331N	156-1362-00
LM337T	156-1451-00
CA339G	156-0411-00
LM339JDS	156-0411-02
MLM339LDS	156-0411-00
TMS339J	156-0411-01
µPC339C	156-0411-00
LF351N	156-1149-00
LF351N/A+	156-1149-01
LF352D	156-1391-00
MC352G	156-0007-00
LF353N	156-1191-00
MC354G	156-0004-00
MC355G	156-0008-00
LF356	156-0770-01
LF356H	156-0770-00
LF356HA+	156-0770-02
LF356L	156-0770-00
LF356N	156-1156-00
LF356N/A+	156-1156-01
MC357G	156-0003-00
LM358F	156-0853-02
LM358F	156-0853-01
LM358N	156-0853-00
MC358AG	156-0002-00
MLM358U	156-0853-02
MC360G	156-0006-00
LM361H	156-0251-00
LM361N/A	156-1324-00
LM371H	156-0251-01
SP380A	156-0255-01
SP380N	156-0255-00
SP381N	156-0256-00
SP384A	156-0272-01
SP384N	156-0272-00
SP391N	156-0254-00
LM393	156-1225-02
LM393N	156-1225-00
LM393N/A+	156-1225-01
LF398H	156-1370-00
LM399	156-0783-00
LM399H/A+	156-0783-01
UHP-408	156-1528-00
DAC411	156-0415-00
MC411P	156-0119-00
LF412ACN	156-1688-00
LF412ACN	156-1699-00
4N26	156-0907-00
4N27	156-0399-00
TL431C-LP	156-1631-00
UA431WC	156-1631-00
TL442CN	156-0517-00
TL442CN	156-0517-01
UPD444	156-1429-01
µP444C	156-1429-00
STK457	156-1653-00
µPC458C	156-1265-00
UA494DC	156-1627-00

VENDOR NUMBER	PART NUMBER
TL494CN	156-1627-00
SG501P	156-0208-01
AD521KD	156-1564-00
NE521N/SUPRII-B	156-1339-00
AD523J	156-0516-00
NE529K	156-0251-00
NE529K	156-0251-01
NE529N	156-1324-00
NE531N	156-0511-00
NE531N-IIB	156-0511-02
NE531V	156-0122-01
NE531V	156-0511-01
NE532	156-0853-00
AD536AJD	156-1259-00
AD536AJH	156-1457-00
536A	156-1457-01
AD542JH	156-1492-00
AD542LH	156-1741-00
AD545KH	156-1838-00
LM555CJ	156-0402-03
LM555CN	156-0402-00
NE555	156-0402-01
SG555CM/CY	156-0402-00
AD558JD/JN	156-1623-00
AD561J	156-0967-00
AD565AJD	156-1329-00
AD580LH	156-0937-00
AD581LH	156-1503-00
AD589JH	156-1586-00
TL594CN	156-1627-00
µPC616A	156-1396-00
DAC660	156-1024-00
AM685HL-B	156-0362-00
AM685HL-B	156-0362-01
MC689P	156-0790-00
DD700	156-0284-00
OPB706A	156-1217-00
709C	156-0287-00
RC709T	156-0015-00
µA709HC	156-0015-00
LM710CH	156-0013-00
TL710CP	156-0134-00
UA710CN	156-0134-00
µA714C	156-0049-02
µA715C	156-0151-00
OP-702CZ	156-1582-00
µA722	156-0082-00
723C	156-0071-01
723HC	156-0053-00
723HM	156-0699-00
723HM	156-0699-01
LM723CH	156-0053-00
LM723CH/A+	156-0053-01
LM723CJ	156-0071-00
LM723H/(883)	156-0699-01
SG723CJ	156-0071-00
SG723CJ/10305	156-0071-02
SG723CT	156-0053-01
SG723T	156-0699-01
TL072ACP3	156-1191-01
UA723PCQR	156-0071-02
UA723HMQB	156-0699-01
µA723DC	156-0071-00
LM725C	156-0685-01
LM725C	156-0685-02
LM725CNA+	156-0685-03
LM725CN	156-0685-00
µA727HC	156-0260-00
733C	156-0074-01
733C	156-0162-01
733C	156-0162-02
LM733CN/AT	156-0162-02
UA733DC	156-0162-00
µA733C	156-0074-00
741C	156-0067-01

VENDOR NUMBER TO TEK PART NUMBER INDEX (CONT)

INTEGRATED CIRCUITS

VENDOR NUMBER	PART NUMBER
741C	156-0067-04
741C	156-0067-05
741C	156-0067-07
741C	156-0067-10
CA741CG	156-0067-12
CA741CT	156-0049-00
CA741S	156-0700-01
D741KN	156-0067-08
LM741CN/CJ	156-0067-03
LM741CH/A+	156-0049-02
LM741H	156-0700-00
UA741MJG	156-0974-00
UA741RC	156-0067-12
UA741T	156-0700-00
µA741C	156-0049-01
µA741C	156-0049-02
µA741C	156-0067-06
µA741CJG	156-0067-13
µA741CP	156-0067-00
µA741HCQR	156-0049-02
µA741TC	156-0067-00
µPC741C	156-0067-00
µPC741C	156-0067-02
NA747C	156-0183-00
µPD765	156-1412-00
TAA790	156-0286-00
ADC801LCN	156-1533-00
DAC 80-CCD-1	156-1409-00
8T06N	156-0379-01
N8T06N/F	156-0379-00
N8T06NB/FB	156-0379-02
8T09	156-0851-02
N8T09	156-0851-01
N8T09A	156-0851-00
N8T13BF	156-0273-00
OPB813	156-1237-00
N8T15A	156-0997-00
N8T16N/F	156-0995-00
MC817P	156-0018-00
N8T20B	156-0298-01
N8T20N/F	156-0298-00
8T22NB/FB	156-0081-02
MC822P	156-0019-00
N8T22N/F	156-0081-00
MC824P	156-0020-00
MC825P	156-0050-00
8T26	156-0996-00
MC826P	156-0028-00
N8T26AFB	156-0096-01
N8T26ADCB	156-0996-01
8T26F	156-0996-00
831-BE	156-0014-00
S831B	156-1116-00
S831B	156-1117-00
MC836P	156-0169-00
N8T37N	156-0683-00
N8T37B	156-0683-01
MC846P	156-0170-00
CR859N	156-0067-02
MC867P	156-0064-00
873B	156-0811-00
883B	156-1303-01
MC889P	156-0021-00
MC889P	156-0021-01
MC890P	156-0044-00
MC890P	156-0044-01
MC891P	156-0059-00
MC892P	156-0045-00
8T95F	156-1018-00
MC8T95L	156-1018-00
MC8T95LDS	156-1018-01
N8T97FB	156-0998-01
MC8T97L	156-0998-00
8T97F	156-0998-00
8T97LDS	156-0998-01
MC8T98L	156-0999-00
N8T98FB	156-0999-01
8T98LDS	156-0999-01
MC936L	156-1082-00
9N37DC	156-0591-00
MC944L	156-1081-00
IN957B	156-0647-00
CµL958	156-0005-00
960DC	156-0001-00
9S74DC	156-0331-02
AIMDAC100AD-Q2	156-0137-00
MC1001P	156-0023-00
MDC-1002	156-0399-00
MC1004P	156-0024-00
MC1006P	156-0054-00
MC1010P	156-0025-00
MC1010P	156-0025-01
MC1011P	156-0332-00
MC1013P	156-0022-00
MC1016P	156-0265-00
DAC1020LCD/A+	156-0719-01
MS1020	156-0394-00
MC1023P	156-0056-00
MC1034P	156-0258-00
MC1035P	156-0457-00
MC1040P	156-0253-00
MC1043P	156-0344-00
1101A	156-0135-00
MM1101AN	156-0135-00
11C01FC	156-1650-00
11C06DC	156-0377-00
F11C06DC	156-0377-00
1123	156-0288-00
11C58DCQR	156-0224-01
TDA1170	156-1693-00
TDA1170	156-1693-01
DAC1200HCB	156-1184-00
DAC1200HCD	156-1184-01
HAL12L10	156-1803-00
PAL12L10	156-1802-00
AD1211HCD	156-1571-00
QC1313A	156-0500-00
MC1350P	156-1709-00
MC1355	156-0902-00
MC1357P	156-0907-00
LF135C9	156-1788-00
CA1391G	156-1147-00
MC1391P	156-0942-00
MC1391P	156-1147-01
MC1391P	156-1147-00
1400	156-1615-00
ER1400	156-1566-00
MC1403AUDS	156-1439-00
MC1403P	156-1166-00
MC1403UDS	156-1173-00
MC1405L	156-0751-00
MC1407L	156-0571-00
MC1408-L	156-0509-02
HD1-4CS0-9	156-0330-00
MC1410	156-1271-00
MC1413PDS	156-1245-00
MC1416P	156-1810-00
MC1436CG	156-0400-00
MC1437P	156-0066-00
MC1440G	156-0207-00
MC1456	156-0200-01
MC1456N	156-0200-00
MC1456 P1	156-0200-00
MC1456U	156-0200-02
CA1458E	156-0158-00
CA1458G	156-0158-05
LM1458J	156-0158-04
MC1458N	156-0158-00
MC1458P	156-0158-01
MC1458P	156-0158-03
MC1458P	156-0158-03
MC1458P1-U	156-0158-00
MC1458U	156-0158-04
MC1458UDS	156-0158-07
µA1458TC/RC	156-0158-00
µPC1458C	156-0158-00
MC1469	156-0052-01
MC1469R	156-0052-00
MC1488	156-0879-00
MC1488	156-0879-01
1489	156-0878-01
DS1489J	156-0878-00
MC1489L	156-0878-00
1495L	156-0407-01
MC1495L	156-0407-00
MC1495LDS	156-0407-02
MC1496G	156-0130-01
MC1496G	156-0130-00
MC1514L	156-1056-00
MC1550G	156-0069-00
CA1558G	156-1607-00
MC1558U	156-1607-00
MC1558JG	156-1607-00
µA1558RM	156-1607-00
MC1594L	156-0461-00
1601	156-0133-00
1602A	156-0346-00
SPQ1626	156-0281-00
MC1648P/L	156-0266-00
SP1648BDP/BDG	156-0266-00
MC1650L	156-0333-01
SP1650C	156-0333-00
SP1650DG	156-0333-01
SP1651B	156-0705-00
MC1658L	156-0224-00
MC1660L	156-0282-00
MC1660L	156-0282-01
MC1660S	156-0063-00
SP1660B	156-0282-00
SP1660L	156-0282-02
MC1661P/L	156-0225-00
SP1661DP/DG	156-0225-00
MC1662P/L	156-0226-00
MC1662	156-0226-01
SP1662DP/DG	156-0226-00
MC1663L	156-0348-00
SP1663DG	156-0348-00
MC1664	156-0227-01
MC1664L1	156-0227-01
MC1664P/L	156-0227-00
SP1664BDP/DG	156-0227-00
MC1666L	156-0334-00
MC1668L	156-0343-00
SP1668DG	156-0343-00
1669L	156-0204-01
1669L	156-0204-02
MC1669L	156-0204-00
SP1669B	156-0204-00
SP1670DG	156-0228-00
MC1672L	156-0353-00
MC1672L(1)	156-0353-01
SP1672B	156-0353-00
SP1690S	156-0377-00
1692DG	156-0307-01
MC1692L	156-0307-00
MC1692L(1)	156-0307-01
SP1692DG	156-0307-00
MC1697P	156-0923-00
B1702A	156-0380-00
MIL1702A	156-0380-00
MC1711CL	156-0116-00
MC1723	156-0071-02
MC1723CLDS	156-0071-00
MC1741CU	156-0067-12
MC1741CU	156-0067-13
1765	156-0246-00
CDP1802AD	156-1280-00
TBP18S22	156-0960-00
CO1836	156-0239-00
CO1837	156-0240-00
CO1838	156-0242-00
CO1839	156-0237-00
CO1840	156-0238-00
CO1841	156-0236-00
TBP18S42	156-1372-01
TBP18S42	156-1372-00
CO1842	156-0243-00
CO1843	156-0241-00
LM1848N	156-1401-00
CDP1857D	156-1279-00
TBP18S72	156-1372-00
S2003K	156-0055-00
ULN2003AP	156-1245-00
S2005K	156-0051-00
SY2H01-2	156-1298-01
2030H	156-1760-00
CD2046N/F-03	156-0914-03
ULN2083	156-0259-00
2101	156-0698-01
2102	156-0291-00
2102	156-0291-01
2102AN	156-0291-00
2102F	156-0893-01
2102FPC/DC	156-0893-00
2102FPC/DC	156-0291-00
2102N	156-0291-00
2102N	156-0893-00
B210A-2	156-1051-00
MM2102AN	156-0291-00
N21F02B	156-0893-00
2114	156-1028-01
2114	156-0128-02
2114L	156-1127-01
2114L	156-1127-02
D2114AL-3	156-1614-00
2114AL-4	156-1028-00
D2114L-4	156-1127-00
2115AL	156-1178-00
CD2115A	156-1278-00
2D131	156-0958-00
CD2140N	156-0147-00
2147	156-1228-01
CD2147H	156-1228-00
D2147(D-2)	156-1228-00
HM2147	156-1228-00
MCM2147(C70)	156-1228-00
TMM2147	156-1228-00
D2148HL	156-1580-00
CM2150N	156-0871-00
2D158	156-1443-00
2167	156-1615-00
2186	156-1734-00
X2201	156-1654-00
MC2257	156-0491-01
MC2257L	156-0491-00
MC2259L	156-0492-00
MC2259L	156-0492-01
SYP2332	156-1239-00
SYP2332	156-1240-00
SYP2332	156-1420-00
SYP/SYC2332	156-1174-00
SYP/SYC2332	156-1175-00
SYC2333	062-4670-00
SYP2333	062-4670-01
KR2376-STP	156-0168-00
MCS2400	156-1238-00
2413	156-0279-01
2501B	156-0135-00
AM2502PC/DC	156-1456-00
AM2502CPE/CJE	156-1456-00
DM2502CN/J	156-1456-00

THIS INDEX IS ARRANGED IN NUMERICAL ORDER, DISREGARDING LETTERS WHICH APPEAR IN SOME VENDOR NUMBERS.

VENDOR NUMBER TO TEK PART NUMBER INDEX (CONT)

INTEGRATED CIRCUITS

4

VENDOR NUMBER	PART NUMBER
25L04	156-1792-00
25S08	156-1049-01
AM25S08DC	156-1049-00
2510K	156-0167-00
2510K	156-0167-01
2511K	156-0154-00
2513	156-0401-01
2513	156-0279-00
2513	156-0147-01
2513N	156-0300-00
2513N	156-0401-00
2513N	156-0401-01
2513N	156-0423-00
2513N	156-0423-01
2513NX	156-0263-00
N2513	156-0147-00
2516N	156-0871-00
25S18	156-1062-01
25S18	156-1062-02
AM25S18DC	156-1062-00
AM25LS22PCB/DCB	156-1481-00
SC2528 (L662)	156-0226-02
SC2528 (L664)	156-0227-01
AM26S02PC/DC	156-1195-00
AM26S02PC	156-1195-00
AM26S02PCB/DCB	156-1195-01
2606B(1)	156-0695-00
2606B(1)	156-0695-01
26S10	156-1747-00
AM26S12APC	156-0483-00
AM26S12PCB/DCB	156-0483-01
N2616N	156-1180-00
N2616N	156-1181-00
FSA2619P	156-1540-00
HA2625	156-0317-01
HA2625	156-0317-03
AM26LS30PCB2/DCB2	156-1316-00
AM26LS30PCB2/DCB2	156-1572-00
26LS32	156-1315-00
26L32NA+/JA+	156-1315-00
AM26LS32PC/DCB	156-1315-00
SN26LS32N3/J4	156-1315-00
2650A-I	156-0986-00
2650A-I	156-0986-01
2650-A-1-I	156-0986-02
2653I/N	156-1572-00
S2657	156-0877-01
SC2681	156-1737-00
27LS00DC	156-0984-00
AM27S03J	156-1189-00
AM27S03ADCB	156-1633-00
AM27LS03DC	156-0599-01
C2704	156-0689-00
AM2708DC	156-0708-00
27LS08	156-0305-01
C2708	156-0708-00
MCM2708L	156-0708-00
AM25S09PCB/DCB	156-1634-00
D2716	156-1017-00
2716	156-1377-00
2716	156-1378-00
2716	156-1379-00
2716	156-1380-00
AM2716	156-1017-00
MBM2716	156-1017-00
MM2716Q	156-1017-00
SYC2716	156-1017-00
TMS2716	156-1101-00
27S18CDE	156-0305-00
AM27S18CD	156-0305-00
FSA2720M	156-1545-00
AM27S29DC	156-1462-00
AM2732DC	156-1403-00
AM2732/DC	156-1651-00
D2732A	156-1625-00

VENDOR NUMBER	PART NUMBER
DA2732A	156-1625-01
D2732A-3	156-1598-00
MBM2732A-30C	156-1598-00
IC2732	156-1403-00
CP2752	156-1460-00
AM2802PC	156-0329-00
AM2855	156-0453-03
AM2855	156-0453-01
AM2855PCB/DCB	156-0453-03
AM2857	156-1039-01
AM2857	156-1039-02
AM2857PC	156-1039-00
S2876	156-1202-00
TBP28S86N	156-1438-00
AM2901BDC	156-1043-00
AM2901BDC	156-1043-01
AM2901BDCB	156-1043-03
AM2901DCB	156-1043-02
IDM2901A-2DC	156-1043-02
IDM2901A-1JC	156-1043-00
MC2901ALC	156-1043-00
MC2901ALD	156-1043-02
MPQ2907	156-1163-00
AM2908DCB/PCB	156-1618-00
IDM2909AJC	156-1029-00
IDM2909AJC	156-1029-01
AM2909ADC	156-1029-00
AM3909ADC	156-1029-01
MC2909LC	156-1029-00
AM2910DC	156-1355-00
MC2910L	156-1355-00
AM2911ADCB	156-1209-01
AM2911ADC	156-1209-00
IDM2911ADC	156-1209-00
IDM2911AJC	156-1209-01
MC2911LC	156-1209-00
AM2940DC	156-1565-00
AM2942DCB	156-1385-00
AM2950DC	156-1389-00
AM2952	156-1839-00
2953	156-1738-00
2964B	156-1749-00
AM2966DCB	156-1740-00
CA3015	156-0017-00
EA3021	156-0209-00
CA3028A	156-0033-00
CA3028A	156-0033-01
CA3030	156-0136-00
CA3030AE	156-0108-00
CA3030X	156-0136-02
CA3039	156-0106-00
CA3039	156-0106-01
CA3045F	156-0065-00
CA3045F	156-0065-01
SL3045	156-0065-00
CA3046	156-0048-00
CA3046	156-0048-01
CA3049	156-0048-00
CA3046	156-0068-00
SL3046CDP	156-0048-00
CA3051	156-0095-00
CA3051	156-0099-00
CA3054	156-1349-00
CA3054S15	156-1349-01
CA3060E	156-0901-00
CA3080AS/5	156-0936-00
CA3080E	156-0912-00
CA3080EX	156-0912-01
CA3080TX	156-0356-01
CA3081	156-0355-00
CA3082	156-1190-00
SL3082DP	156-1190-00
CA3083	156-0259-00
CA3083/5	156-0259-01
CA3083EX	156-0259-02

VENDOR NUMBER	PART NUMBER
CA3086	156-0197-01
CA3086	156-0197-03
CA3086	156-0197-00
SL3086	156-0197-00
LM308J-8	156-0512-03
CA3096AE-17	156-1381-00
CA3102E	156-0534-00
CA3102EX	156-0534-01
CA3127E	156-1294-00
SL3127CDP	156-1294-00
CA3130S	156-0686-00
CA3130S/5	156-0686-01
CA3130S/5	156-0686-02
CA3140EX	156-1134-00
CA3140AE	156-1134-01
CA3140S	156-0921-00
CA3140S	156-0921-01
CA3140	156-0921-02
CA3141E	156-1450-00
CA3160E	156-1114-00
CA3160E15	156-1114-01
LM3146N	156-0197-00
CA3183AE	156-1527-00
AZ3238	156-1012-00
JL/ZA3238	156-1009-00
ZA3238	156-1010-00
CA3240E	156-1422-00
JL/ZA3240	156-1001-00
AZ3241	156-1002-00
3242	156-0965-01
D3242	156-0965-02
D3242	156-0965-00
MC3242AL	156-0965-00
TMS/AX3242	156-1003-00
AZ3243	156-1004-00
D3245	156-0992-00
UPC3246	156-0495-00
EA3304	156-0210-00
3341DC	156-0421-00
3341A	156-1346-00
3401B	156-0370-00
LM340T-5	156-0277-00
MC3405P	156-1284-00
LM341P-5.0TB	156-1263-00
MC3410CL	156-0927-00
MC3410	156-0927-01
MC3410CLD	156-0927-02
MC3423U	156-1799-00
SG3423A	156-1266-01
3430K	156-0546-00
MC3431L/P	156-1647-00
3440	156-1219-01
3440P	156-1219-03
MC3440AP	156-1219-00
3441P	156-0600-01
3441P	156-0600-02
3441P	156-0600-03
CM3441	156-0300-00
MC3441P	156-0600-00
MC3446AP	156-0849-00
MC3448	156-1133-01
MC3448	156-1133-02
MC3448AP/AL	156-1133-00
CC3449N	156-0652-03
3459	156-0740-02
MC3459P	156-0740-00
MC3459	156-0740-01
MC3460	156-0634-01
MC3460L	156-0634-00
MPQ3467	156-1569-00
DH3467CN	156-1569-00
3501AJ	156-0208-00
SG3503 Fmly	156-1173-00
3524CN	156-0933-00
CA3524G	156-0933-00

VENDOR NUMBER	PART NUMBER
SG3526	156-1585-01
3526J	156-1585-00
CM3551N	156-0279-00
MLM358P1	156-0853-00
DS3651J/N	156-1647-00
DS3691NA+/JA+	156-1316-00
DS3691N/J	156-1316-00
CA3725	156-0281-00
3814DC	156-0306-00
SG3821N	156-0048-00
CM3840	156-0263-00
SCM3842P	156-0712-00
SCM3843P	156-0713-00
SCM3844P	156-0714-00
SCM3845P	156-0715-00
3850PC/DC	156-1218-00
F3853DC	156-1241-00
MC3853P	156-1241-00
SCM3859	156-0676-00
SCM3860P	156-0677-00
SCM3861L/P	156-0678-00
SCM3862L/P	156-0791-00
SCM3863L/P	156-0792-00
SCM3864L/P	156-0794-00
SCM3865P/L	156-0772-00
SCM3866P/L	156-0773-00
SCM3867P/L	156-0774-00
SCM3868P/L	156-0775-00
SCM3869P/L	156-0776-00
F3871EPC	156-1242-00
MK3871P	156-1242-00
MK3880P-4/J-4	156-0983-01
3880N-4	156-0983-02
MK3881N-4/P-4MKX	156-1612-00
MK3885P-4/N-4	156-1424-01
SG3886N	156-0197-00
SCM3889P	156-0855-00
SCM3890P	156-0856-00
SCM3891P	156-0857-00
SCM3893L	156-0713-01
SCM3897L	156-0668-02
LM3900N	156-1016-00
SCM3949P	156-0659-01
SCM3952P/L	156-0673-02
MCM3953	156-0659-00
SCM3954P	156-0664-01
SCM3957P	156-0667-01
SCM3958	156-0675-00
SCM3961P	156-0671-01
SCM3962P	156-0672-01
SCM3963P	156-0673-01
SCM3964P	156-0674-01
SCM3965P	156-0747-00
SCM3966P	156-0748-00
EA4000	156-0293-00
EA4000	156-0293-01
EA4000	156-0293-03
EA4000	156-0294-00
EA4000	156-0294-01
EA4000	156-0294-02
EA4000	156-0294-03
4001A	156-0349-02
4001B	156-0394-04
4001CJ	156-0350-04
CD4001BCJ	156-0349-05
CA4001BCJ/A+	156-0394-06
CD4001BF	156-0349-05
CD4001BFX	156-0349-06
CD4001CJ	156-0349-00
CD4001CJ	156-0349-01
CD4001UBFX	156-0349-03
EA4001	156-0296-01
4002	156-0754-01
4002B	156-0754-02
CD4002BF	156-0754-00

VENDOR NUMBER TO TEK PART NUMBER INDEX (CONT)

INTEGRATED CIRCUITS

VENDOR NUMBER	PART NUMBER
CD4002BFX	156-0754-02
SIL4002BF	156-0754-00
D4004	156-0803-00
INS4004	156-0803-00
4006DC	156-0681-00
4006BDCQR	156-0681-02
CD4006	156-0681-01
MCD4006BCLDS	156-0681-02
MK4006P-6	156-0179-00
MK4006	156-0179-01
S4006	156-0179-00
CD4007AE	156-0352-00
4008	156-0502-01
CD4008BF	156-0502-00
CD4008BFX	156-0502-02
D/C4008	156-0868-00
INS4008P/J	156-0868-00
4009	156-0503-01
CD4009CJ/A+	156-0503-02
CD4009UCBF	156-0503-00
CD4009UBF	156-0503-00
CD4009UBFX	156-0503-02
D/C4009	156-0867-00
INS4009P/J	156-0867-00
4010	156-0504-01
4010	156-0504-02
CD4010BF	156-0504-00
CD4010BFX	156-0504-02
CD4010CJ	156-0504-00
CD4010JA+	156-0504-02
4011BDC	156-0350-01
4011BDCQR	156-0350-03
CD4011BCJ	156-0350-04
CD4011BCJA+	156-0350-05
CD4011BCJ/A+	156-0350-06
CD4011BF	156-0350-04
CD4011UBF	156-0350-00
CD4011UBFX	156-0350-02
CD4011UBFX	156-0350-06
SIL4011UBF	156-0350-00
4012	156-0793-01
CD4012BFX	156-0793-02
CD4012BF	156-0793-00
4013	156-0366-01
CD4013BF	156-0366-00
CD4013BFX	156-0366-00
CD4013BFX	156-0366-03
4014B	156-0568-01
4014DC	156-0568-00
4014DCQR	156-0568-01
CD4015BF	156-0801-00
CD4015BFX	156-0801-01
4016	156-0289-01
CD4016AY	156-0289-00
CD4016AF	156-0802-00
CD4016BFX	156-0289-02
CD4016CJ	156-0289-00
CD4016CJ	156-0802-00
MM4016CJ/A+	156-0289-02
MM4017BCJ	156-0799-00
CD4017CJ	156-0799-00
MM4017BCJA+	156-0799-01
SIL4017BF	156-0799-00
4018P	156-0202-01
CD4018BF	156-0519-00
CD4018BF	156-0519-01
CD4019BFX	156-1352-00
MC4018NDS/JDS	156-0202-02
MC4018P	156-0202-00
CD4019BFX	156-1352-00
CD4019BCJA+	156-1352-00
CD4020BFX	156-0895-01
MM4020BCJ	156-0895-00
SIL4020BF	156-0895-00
4021BDCQR	156-0576-02

VENDOR NUMBER	PART NUMBER
CD4021BF	156-0576-00
CD4021BFX	156-0576-02
CD4022BFX	156-1369-00
MC4022P	156-0372-00
TC4022BP	156-1421-00
4023	156-0524-01
CD4023BF	156-0524-00
CD4023BFX	156-0524-02
4024BF	156-0523-00
4024BDC	156-0523-01
CD4024BFX	156-0523-01
MC4024P	156-0121-00
MC4024P	156-0121-01
MC4024P	156-0121-02
TMS4024NC	156-0499-00
TMS4024NC	156-0499-01
4025BDCQR	156-0575-05
4025DC	156-0575-00
4025PC	156-0575-02
CD4025BFX	156-0575-03
CD4025UBF	156-0575-05
SIL4025B	156-0575-02
4027	156-0525-01
4027DC	156-0525-00
4027DC	156-0525-02
CD4028BF	156-0756-00
CD4028BFX	156-0756-01
SIL4028BF	156-0756-00
SC4029B	156-1159-00
4035B	156-0580-03
4035BDCQR	156-0580-02
CD4035A	156-0580-01
CD4035BFX	156-0580-02
MC4035P	156-0198-00
4040BCD	156-0545-00
4040BDCQR	156-0545-01
CD4040BFX	156-0545-01
MC4040AE	156-0581-00
CD4042BF	156-0800-00
CD4042BFX	156-0800-01
MC4044	156-0124-00
MC4044	156-0124-01
MC4044	156-0124-02
MC4048P	156-0159-00
MC4048P	156-0159-01
MC4048P	156-0159-02
4049	156-0494-01
CD4049UBF	156-0494-00
CD4049UBF	156-0494-02
CD4049UBFX	156-0494-02
4050	156-0330-01
CD4050BFX	156-0330-00
CD4050BFX	156-0330-02
4051	156-0513-01
4051BD	156-0513-00
4051BCL	156-0513-00
CD4051BFX	156-0513-02
CD4051CJA+	156-0513-02
TMS4051JL	156-0924-00
4052BDC	156-0514-00
F4052BDC	156-0514-02
CD4052BF	156-0514-00
CD4052BFX	156-0514-01
4053	156-0515-01
4053B	156-0515-04
CD4053BF	156-0515-00
CD4054BF	156-0515-03
CD4053BFX	156-0515-02
CD4066AE	156-0644-01
CD4066BF	156-0644-02
CD4066BFX	156-0644-03
4069DC	156-0745-00
CD4069UBF	156-0745-00
4070	156-0786-01
CD4070BF	156-0786-00

VENDOR NUMBER	PART NUMBER
CD4070BFX	156-0786-02
MM4070BJA+	156-0786-02
CD4071BF	156-1340-00
CD4075BFX	156-1480-00
MM4075BCJA+	156-1480-00
4076BDCQR	156-0574-02
CD4078BFX	156-1320-00
CD4081BF	156-1478-00
CD4081BFX	156-1478-01
CD4082BFX	156-1787-00
MCI4082BCLD	156-1787-00
4085BCD	156-0925-00
4085BDC	156-0925-01
4085DCQR	156-0925-02
CD4085BF	156-0925-00
CD4085BFX	156-0925-02
4086BDCQR	156-0753-01
CD4086BF	156-0753-00
CD4086BFX	156-0753-01
4093	156-0961-03
CD4093BF	156-0961-00
CD4093BFX	156-0961-02
MC4093	156-0961-01
CD4094BF	156-0796-00
CD4094BFX	156-0796-01
TMS4100	156-0102-00
TMS4100	156-0103-00
TMS4100	156-0104-00
0441D-2	156-1000-00
RC4131	156-0070-00
RC4151NB	156-1362-00
416-2	156-0968-00
μPD416D-3	156-1353-00
RC4194DC	156-0496-00
RC4194DC	156-0496-01
RM4194D	156-1308-00
RM4194D	156-1308-01
SG4194CJ	156-0496-00
SG4194J	156-1308-00
S4241	156-0947-02
S4242	156-1204-01
S4243	156-1036-01
S4244	156-1427-01
S4264	156-1288-00
S4264	156-1289-00
S4264	156-1290-00
S4289	156-1113-00
UPC4359C	156-1816-00
S4393	156-1416-00
OPB4428	156-1237-00
4490	156-0763-02
4511BDC	156-0795-00
4511BDCQR	156-0795-01
CD4511BF	156-0795-00
CD4511BFX	156-0795-01
CD4512BFX	156-1486-00
4516BDC	156-0582-00
4516DCQA	156-0582-03
CD4516BFX	156-0582-02
CD4520BF	156-0579-00
CD4520BFX	156-0579-02
S4525	156-0945-01
4528D	156-0578-00
4528DCQR	156-0578-02
RC4531NB	156-0511-00
RC4531TE	156-0122-00
CD4532BF	156-1282-00
CD4555BF	156-1368-00
4556BDC	156-0898-00
CD4556BFX	156-0898-01
4702BDC	156-0850-00
4702BCDQR	156-0850-02
4732	156-1174-00
4732	156-1175-00
TMS4732	156-1001-00

VENDOR NUMBER	PART NUMBER
TMS4732	156-1002-00
TMS4732	156-1003-00
TMS4732	156-1004-00
TMS4732	156-1005-00
TMS4732	156-1006-00
TMS4732	156-1007-00
TMS4732	156-1008-00
TMS4732	156-1009-00
TMS4732	156-1010-00
TMS4732	156-1011-00
TMS4732	156-1012-00
TMS4732	156-1099-00
TMS4732	156-1167-00
TMS4732J/D	062-4182-00
TMS4732N	062-4182-01
4804A	156-0943-00
4804A/L	156-0943-01
SD5000N	156-1303-00
SD5000B	156-1303-01
SD5002CM	156-1553-00
MK5002P	156-0408-00
MK5007P	156-0409-00
MK5009	156-0410-00
MK5009	156-0410-01
NE5009-F	156-1255-00
IH5010CJD/CDD	156-1256-00
NE5018-11B	156-1311-00
5S021	156-1553-00
5S024	156-1303-01
CRT5027	156-1386-01
CRT5027C	156-1386-00
SND5027D/C	156-1386-01
TC5037P	156-1419-00
S5037	156-1356-00
5055N	156-0453-00
MM5055N	156-0453-00
MM5055N	156-0453-01
TDS5180	156-1345-00
IMS5200CJG	156-0940-00
MM5203Q	156-0463-00
MM5204AQ	156-0528-00
MM5213N/J	156-1087-00
MM5213NCUQ/N	156-0725-00
MM5213N/PRO.2	156-0726-00
MM5213NZF/N	156-0354-00
MM5213UBF/N	156-0540-00
MM5214N/Mask 1	156-0618-00
MM5214N/Mask 2	156-0619-00
MM5214N/Mask 3	156-0620-00
MM5214N/Mask 4	156-0621-00
MM5243	156-0932-00
MM5280D	156-1000-00
TDS5318	156-1590-00
MM5321N	156-0946-00
MM5369AA/N	156-1337-00
SNC5400	156-0843-00
SNC5401J	156-0805-00
SNC5402J	156-0806-00
SNC5404J	156-0807-00
5406	156-0808-01
SNC5406J	156-0808-00
SNC5408J	156-0809-00
SNC5410J	156-0810-00
DM5411J	156-0811-00
SNC5412J	156-0812-00
SNC5413J	156-0813-00
SNC5416J	156-0814-00
SNC5417J	156-0815-00
SNC5420J	156-0816-00
SNC5425J	156-0817-00
SNC5426J	156-0818-00
SNC5430J	156-0819-00
SNC5437J	156-0820-00
SNC5438J	156-0821-00
SNC5442AJ	156-0822-00

THIS INDEX IS ARRANGED IN NUMERICAL ORDER, DISREGARDING LETTERS WHICH APPEAR IN SOME VENDOR NUMBERS.

VENDOR NUMBER TO TEK PART NUMBER INDEX (CONT)

INTEGRATED CIRCUITS

4

VENDOR NUMBER	PART NUMBER
SNC5473J	156-0823-00
SNC5474J	156-0824-00
SNC5475J	156-0825-00
SNC5476J	156-0826-00
SNC54H87J	156-0842-00
SNC5493J	156-0827-00
TC5516AP	156-1632-00
TC5516APL	156-1706-00
NE5532FE-IIB	156-1272-00
XR5532CN	156-1272-00
NE5533N	156-1446-00
NE5533F	156-1446-02
NE5533AN	156-1446-01
XR-5533N	156-1446-02
NE5534	156-1338-02
NE5534AN	156-1338-01
NE5534N	156-1338-00
NE5534P	156-1338-00
XR5534CN	156-1338-02
TINE5534P3	156-1338-02
TC5565P	156-1817-00
IM5604CDE	156-1146-00
IM5610CJE/CDE	156-0785-00
MM5610AJ	156-0504-00
CM5611	156-0364-00
N5710V	156-0134-01
5712	156-1461-00
MM5740AAC/D	156-1153-00
MM5837N	156-1433-00
AM6012PC	156-1589-00
DAC60-12	156-1024-00
DAC60-12	156-1024-01
MM6055	156-0337-00
AM6080PC	156-1555-00
SL6083	156-0001-00
HM6116LR4	156-1632-00
HM6116P-3	156-1594-00
XR6118	156-1649-00
UDN6118A	156-1649-00
HM6147	156-1228-00
6300N	156-0486-00
CM6330	156-0401-00
64S02PL	156-1310-02
IM-6402IPL	156-1310-00
R6500	156-1402-00
SY6500	156-1402-00
R6502P/AC	156-1402-01
R6502P	156-1425-00
SYP/SYC6502	156-1425-00
SYP/SYC6502A	156-1425-01
6504	156-1482-00
R6504P/C	156-1482-00
SYP/SYC6504	156-1482-00
IM6508-IJE	156-1060-00
SY6520P/D	156-0427-00
SYP6522	156-1539-00
6545A	156-1785-00
AN6551	156-1423-00
HM6562	156-0887-01
MCM6571A	156-1168-00
6575	156-0950-01
MCM6575	156-0950-00
MCM6581L	156-0952-00
MCM6581	156-0952-01
MCM6590L	156-0660-00
MCM6509L	156-0661-00
MCM6590L	156-0662-00
MCM6590L	156-0663-00
MCM6590L	156-0664-00
MCM6590L	156-0665-00
MCM6590L	156-0666-00
MCM6590L	156-0667-00
MCM6590L	156-0668-00
MCM6590L	156-0669-00
MCM6590L	156-0670-00

VENDOR NUMBER	PART NUMBER
MCM6590L	156-0671-00
MCM6590L	156-0672-00
MCM6590L	156-0673-00
MCM6590L	156-0674-00
MCM6604	156-0862-01
MCM6604L	156-0862-00
MCM6604L02	156-0862-02
6605	156-1047-01
MCM6605AL	156-0573-00
S6623	156-1417-00
S6624	156-0965-00
S6625	156-0965-02
ITS6637	156-0223-00
S6699	156-1598-00
6800	156-0426-01
6800	156-0426-02
68B00	156-0426-04
F6800DS	156-0426-00
F68B00DC	156-0426-04
MC68B00L	156-0426-04
MC6800S	156-0426-00
MC6800LD	156-0426-05
S68B00	156-0426-04
S6800E	156-0426-00
F6802DC	156-1342-00
MC6802SL	156-1342-00
S6802D/C	156-1342-00
MC6803-G1/L1	156-1683-00
F68A08P/D	156-1342-01
S68A08D/C	156-1342-01
68B09E	156-1720-00
MC68B09L	156-1494-00
MC68B09S/L	156-1494-00
MC68B09S/L	156-1494-01
S68B09D	156-1494-00
68B09D/E	156-1494-01
S68B09D/E	156-1494-00
MCM6810S	156-0716-00
MCM6810LDS	156-0716-01
MCM68B10SD	156-1591-00
S6810-A	156-0716-00
S6810-A	156-0716-01
6820	156-0427-01
6820	156-0427-02
6820PC/DC	156-0427-02
S6820P/E	156-0427-00
6821P/A	156-0427-03
F6821DC	156-0427-03
MC6821L	156-0427-03
MC6821LD/PD	156-0427-04
MC68B21P/L	156-1205-00
MC68B21SL	156-1205-01
F68B21P	156-1205-00
6831BC/E	062-4171-00
6831BP	062-4171-01
S6831B	156-1135-00
S6831B	156-1136-00
S6831B	156-1137-00
S6831B	156-1138-00
CN6832	156-0776-00
MC68B40L/P	156-1426-00
MC6840PDS/LDS	156-1549-00
6844	156-1458-00
MC6848LD	156-1246-01
6850DCQR	156-0658-01
MC6850	156-0658-00
MC6850P/L	156-0658-00
MC68B50P/L	156-1206-00
S68B50P/E/C	156-1206-00
S6850P/C	156-0658-00
S6850C/E	156-0658-01
F6850PC/DC	156-0658-00
S6852E	156-1013-00
MC6875P/L	156-1086-00
MC6880	156-0996-00

VENDOR NUMBER	PART NUMBER
MC6885	156-1018-00
MC6887	156-0998-00
MC6888	156-0999-00
TA6993	156-1115-00
LS7031	156-1411-00
MB7071H	156-1578-00
MB7072EC	156-1297-00
MC7072N	156-1297-01
MC7086C	156-1224-00
IC7106CPL	156-1483-00
ICL7107CPL	156-1435-00
IM7114LCJN	156-1127-00
S7129	156-1281-00
TA7193P	156-1420-00
ICM7213IPD	156-1274-00
ICM7218AIJI	156-1621-00
ICM7226BIPL	156-1655-00
7400	156-0030-01
7400	156-0030-02
7400J	156-0549-01
7400PC/DC	156-0030-00
7400PCQR/DCQR	156-0180-04
N7400NB/FB	156-0030-03
N7400N/F	156-0030-00
N7400PCQR/DCQR	156-0030-03
SN7400N/J	156-0030-00
SN7400J	156-0549-00
μPB7400	156-0030-00
MM74C00JA+/NA+	156-0941-01
MM74C00J	156-0941-00
74F00	156-1707-00
74L00	156-0113-01
74L00	156-0113-02
DM74L00N	156-0113-00
DM74L00N	156-0113-04
SN74L00N	156-0113-00
SN74L00N	156-0113-03
DM74S00N/J	156-0180-00
DM74S00NA+/JA+	156-0180-04
74S00PC/DC	156-0180-00
74S00	156-0180-01
74S00	156-0180-02
N74S00N/F	156-0180-00
N74S00NB/FB	156-0180-04
SN74S00N/J	156-0180-00
SN74S00N/J	156-0180-03
SN74S00NP3/JP4	156-0180-04
74LS00	156-0382-01
74LS00PC/DC	156-0382-00
74LS00PCQR/DCQR	156-0382-02
DM74LS00N/J	156-0382-00
DM74LS00NA+/JA+	156-0382-02
N74LS00N/F	156-0382-00
N74LS00NB/FB	156-0382-02
SN74LS00N/J	156-0382-00
SN74LS00NP3/JP4	156-0382-02
SN74LS00NDS/JDS	156-0382-02
7401J	156-0550-01
7401PC/DC	156-0057-00
7401PCQR/DCQR	156-0057-02
DM7401N	156-0057-00
DM7401NA+/JA+	156-0057-02
N7401A	156-0057-00
SN7401N	156-0057-00
SN7401N	156-0057-01
SN7401NP3/JP4	156-0057-02
SN7401J	156-0550-00
7402	156-0043-01
7402	156-0043-02
7402J	156-0551-01
7402PC	156-0043-00
7402PCQR/DCQR	156-0043-03
DM7402N	156-0043-00
DM7402NA+/JA+	156-0043-03
N7402A	156-0043-00

VENDOR NUMBER	PART NUMBER
N7402NB/FB	156-0043-03
SN7402N	156-0043-00
SN7402NP3/JP4	156-0043-03
74F02PCQR/DCQR	156-1743-00
SN7402J	156-0551-00
74L02	156-0268-01
74L02PC/DC	156-0268-00
DM74L02N/J	156-0268-00
SN74L02N	156-0268-00
74S02PC	156-0690-00
74S02PC	156-0690-01
74S02PCQR/DCQR	156-0690-03
DM74S02N	156-0690-00
DM74S02NA+/JA+	156-0690-03
N74S02N	156-0690-00
N74S02NB/FB	156-0690-03
SN74S02N	156-0690-00
SN74S02J/N	156-0690-02
SN74S02NP3/JP3	156-0690-03
74LS02	156-0383-01
74LS02PC/DC	156-0383-00
74LS02PCQR/DCQR	156-0383-02
DM74LS02N	156-0383-00
N74LS02N/F	156-0383-00
N74LS02NDS/JDS	156-0383-02
SN74LS02NP3/JP4	156-0383-02
SN74LS02N/J	156-0383-00
7403	156-0186-01
7403PC	156-0186-00
7403PCQR/DCQR	156-0186-02
DM7403N	156-0186-00
ITT7403N	156-0186-00
N7403A	156-0186-00
N7403NB/FB	156-0186-02
SN7403N	156-0186-00
SN7403N	156-0186-02
74S03PC	156-0303-00
74S03PCQR/DCQR	156-0303-01
DM74S03N	156-0303-00
DM74S03NA+/JA+	156-0303-01
N74S03A	156-0303-00
N74S03NB/FB	156-0303-01
SN74S03N	156-0303-00
SN74S03NP3/JP4	156-0303-01
SN74S03NDS/JDS	156-0303-02
74LS03PC/DC	156-0384-00
74LS03	156-0384-01
74LS03PCQR/DCQR	156-0384-02
DM74LS03N/J	156-0384-00
DM74LS03NA+/JA+	156-0384-02
N74LS03N/F	156-0384-00
SN74LS03NDS/JDS	156-0384-02
SN74LS03N/J	156-0384-00
SN74LS03NP3/JP4	156-0384-02
7404	156-0058-01
7404J	156-0552-01
7404PC	156-0058-00
7404PCQR/DCQR	156-0058-02
N7404A	156-0058-00
N7404NB/FB	156-0058-02
SN7404N	156-0058-00
SN7404NP3/JP3	156-0058-02
74F04	156-1722-00
N7404NB/FB	156-0058-02
SN74H04N	156-0189-00
74L04	156-0292-01
DM74L04N/J	156-0292-00
SN74L04N/J	156-0292-00
74S04	156-0323-01
74S04	156-0323-03
74S04PC	156-0323-00
74S04PCQR/DCQR	156-0323-02
DM74S04N	156-0323-00
DM74S04NA+/JA+	156-0323-02
N74S04N	156-0323-00

VENDOR NUMBER TO TEK PART NUMBER INDEX (CONT)

INTEGRATED CIRCUITS

VENDOR NUMBER	PART NUMBER
N74S04NB/FB	156-0323-02
SN74S04N	156-0323-00
SN74S04NP3/JP4	156-0323-02
74LS04PC/DC	156-0385-00
DM74LS04NA+/JA+	156-0385-02
DM74LS04N/J	156-0385-00
N74LS04NB/FB	156-0385-02
N74LS04N/F	156-0385-00
SN74LS04N/J	156-0385-00
SN74LS04NP3/JP4	156-0385-02
SN74LS04NDS/JDS	156-0385-02
SN74LS04N/G	156-0385-00
SN7404J	156-0552-00
7405	156-0092-01
7405PC/DC	156-0092-00
7405PCQR/DCQR	156-0092-02
DM7405N/J	156-0092-02
DM7405NA+/JA+	156-0092-02
N7405N/F	156-0092-00
N7405NB/FB	156-0092-02
SN7405N/J	156-0092-00
SN7405NP3/JP4	156-0092-02
74H05	156-0922-01
74H05	156-0922-02
74H05PC/DC	156-0922-00
DM74H05N/J	156-0922-00
N74H05N/F	156-0922-00
SN74H05N/J	156-0922-00
74S05	156-0403-01
74S05PC/DC	156-0403-00
74S05PCQR/DCQR	156-0403-02
DM74S05N/J	156-0403-00
DM74S05NA+/JA+	156-0403-02
N74S05NB/FB	156-0403-02
N74S05N/F	156-0403-00
SN74S05N/J	156-0403-00
SN74S05NP3/JP4	156-0403-02
74LS05PC/DC	156-0724-00
74LS05	156-0724-01
74LS05N/J	156-0724-00
74LS05PCQR/DCQR	156-0724-02
DM74LS05N	156-0724-00
DM74LS05NA+/JA+	156-0724-02
N74LS05A	156-0724-00
N74LS05NB/FB	156-0724-02
SN74LS05N	156-0724-00
SN74LS02N3/J4	156-0724-02
SN74LS05NDS/JDS	156-0724-02
7406	156-0153-01
7406J	156-0611-01
7406J	156-0611-02
DM/SN7406	156-0153-00
N7406N	156-0153-00
SN7406A	156-0153-02
SN7406N	156-0153-00
SN7406J	156-0611-00
7407PC/DC	156-1080-00
7407PCQR/DCQR	156-1080-01
DM7407N/J	156-1080-00
DM7407NA+/JA+	156-1080-01
N7407N	156-1080-00
SN7407N/J	156-1080-00
SN7407NP3/JP4	156-1080-01
7408	156-0129-01
7408PC/DC	156-0129-00
7408PCQR/DCQR	156-0129-02
DM7408N/J	156-0129-00
N7408N	156-0129-00
SN7408N/J	156-0129-00
SN7408N/J	156-0129-02
7408J	156-0588-01
SN7408J	156-0588-00
74C08	156-0577-01
DM74C08NA+/JA+	156-0577-02
MM74C08J	156-0577-00
74F08	156-1723-00
74S08PC/DC	156-0459-00
74S08PCQR/DCQR	156-0459-02
N74S08N/F	156-0459-00
N74S08NB/FB	156-0459-02
74S08	156-0459-01
SN74S08N/J	156-0459-00
SN74S08NP3/JP4	156-0459-02
74LS08PC/DC	156-0480-00
74LS08PCQR/DCQR	156-0480-02
DM74LS08N/SJ	156-0480-00
DM74LS08NA+/JA+	156-0480-02
N74LS08N	156-0480-00
N74LS08NB/FB	156-0480-02
N74LS08N/F	156-0480-00
74LS08	156-0480-01
SN74LS08N/J	156-0480-00
SN74LS08NDS/JDS	156-0480-02
SN74LS08NP3/JP4	156-0480-02
7409PC/DC	156-0460-00
7409PCQR/DCQR	156-0460-02
DM7409N/J	156-0460-00
DM7409NA+/JA+	156-0460-02
N7409N	156-0460-00
SN7409N/J	156-0460-00
N74S09NB/FB	156-1286-00
SN74S09N/J	156-1286-00
SN74S09N3/J4	156-1286-00
74LS09	156-0728-01
74LS09PCQR/DCQR	156-0728-02
74LS09PC/DC	156-0728-00
DM74LS09N/J	156-0728-00
N74LS09N	156-0728-00
SN74LS09N/J	156-0728-00
SN74LS09NDS/JDS	156-0728-02
SN74LS09NP3/JP4	156-0728-02
7410	156-0047-01
7410J	156-0553-01
7410PC	156-0047-00
DM7410N	156-0047-00
DM7410NA+/JA+	156-0047-02
F7410PCQR/DCQR	156-0047-02
μPB7410C	156-0047-00
N7410N	156-0047-00
N7410NB/FB	156-0047-02
SN7410N	156-0047-00
SN7410NP3/JP4	156-0047-02
SN7410J	156-0553-00
74F10	156-1752-00
74S10	156-0321-01
74S10PC	156-0321-00
74S10NB/FB	156-0321-02
DM74S10N	156-0321-00
DM74S10NA+/JA+	156-0321-02
N74S10A	156-0321-00
N74S10PCQR/DCQR	156-0321-02
SN74S10N	156-0321-00
SN74S10NP3/JP4	156-0321-02
MM74C10NA+/JA+	156-0938-01
MM74C10J	156-0938-00
74LS10	156-0386-01
74LS10PC/DC	156-0386-00
74LS10PCQR/DCQR	156-0386-02
DM74LS10N/J	156-0386-00
DM74LS10NA+/JA+	156-0386-02
N74LS10NB/FB	156-0386-02
N74LS10N/F	156-0386-00
SN74LS10N/J	156-0386-00
SN74LS10NDS/JDS	156-0386-02
SN74LS10NP3/JP4	156-0553-00
74ALS10	156-1832-00
7411	156-0163-01
7411DC	156-0612-00
7411J	156-0612-01
7411PC	156-0163-00
7411PCQR/DCQR	156-0163-02
DM7411N	156-0163-00
DM7411NA+/JA+	156-0163-02
N7411A	156-0163-00
N7411F	156-0612-00
N7411NB/FB	156-0612-02
SN7411J	156-0612-00
SN7411N	156-0163-00
74F11	156-1663-00
74S11	156-0320-01
74S11PCQR/DCQR	156-0320-00
DM74S11N	156-0320-00
N74S11NB/NF	156-0320-00
SN74S11N	156-0320-00
SN74S11NP3/JP4	156-0320-03
74LS11	156-0481-01
74LS11PC/DC	156-0481-00
74LS11PCQR/DCQR	156-0481-02
DM74LS11N/J	156-0481-00
DM74LS11NA+/JA+	156-0481-02
N74LS11N/F	156-0481-00
N74LS11NB/FB	156-0481-02
SN74LS11N/J	156-0481-00
SN74LS11NDS/JDS	156-0481-02
SN74LS11NP3/JP4	156-0481-02
7412	156-0144-01
7412J	156-0587-01
7412PC/DC	156-0144-00
7412PCQR/DCQR	156-0144-02
DM7412A	156-0144-00
DM7412NA+/JA+	156-0144-02
N7412N/J	156-0144-00
SN7412N/J	156-0144-00
SN74LSNP3/JP4	156-0144-02
SN7412J	156-0587-00
74LS12	156-0722-01
74LS12PC	156-0722-00
DM74LS12N	156-0722-00
DM74LS12NA+/JA+	156-0722-02
N74LS12A	156-0722-00
SN74LS12N	156-0722-00
SN74LS12NDS/JDS	156-0722-02
SN74LS12NP3/JP4	156-0722-02
7413	156-0149-01
7413J	156-0586-01
7413PC	156-0149-00
ITT7413N	156-0149-00
DM7413N	156-0149-00
DM7413NA+/JA+	156-0149-02
N7413A	156-0149-00
N7413NB/FB	156-0149-02
SN7413J	156-0586-00
SN7413N	156-0149-00
SN7413NP3/JP4	156-0149-02
74LS13	156-1276-01
DM74LS13N/J	156-1276-00
SN74LS13N/J	156-0276-00
SN74LS13N/J	156-1276-00
7414	156-0462-01
7414PC	156-0462-00
7414PC/DC	156-0462-02
7414PCQR/DCQR	156-0462-02
DM7414N	156-0462-00
DM7414NA+/JA+	156-0462-02
N7414N	156-0462-00
N7414NB/FB	156-0462-02
SN7414N	156-0462-00
SN7414NP3/JP4	156-0462-02
MC74C14	156-0876-00
MM74C14JA+	156-0876-01
74LS14	156-0645-01
74LS14PC/DC	156-0645-00
DM74LS14N/J	156-0645-00
DM74LS14NA+/JA+	156-0645-02
N74LS14N/F	156-0645-00
N74LS14NB/FB	156-0645-02
N74LS14X	156-1363-00
SN74LS14N/J	156-0645-00
SN74LS14NP3/JP4	156-0645-02
SN74LS14NDS/JDS	156-0645-02
SN74LS14YMP	156-1363-00
74S15	156-1680-00
74LS15	156-1267-00
DM74LS15N/A	156-1267-00
DM74LS15NA+/JA+	156-1267-00
SN74LS15NDS	156-1267-00
SN74LS15NDS	156-1267-01
SN74LS15NDS/JDS	156-1267-00
SN74LS15NDS/JDS	156-1267-01
SN74LSNP3/JP4	156-1267-00
SN74LSNP3/JP4	156-1267-01
7416	156-0093-01
7416J	156-0585-01
7416PC	156-0093-00
7416PCQR/DCQR	156-0093-02
DM7416N	156-0093-00
N7416A	156-0093-00
N7416NB/FB	156-0093-02
SN7416N	156-0093-00
SN7416N	156-0093-02
SN7416J	156-0585-00
7417	156-0140-01
7417J	156-0589-01
7417PC	156-0140-00
7417PCQR/DCQR	156-0140-02
DM7417N	156-0140-00
N7417A	156-0140-00
N7417NB/FB	156-0140-02
SN7417J	156-0589-00
SN7417N	156-0140-00
SN7417NP3/JP4	156-0140-02
7418	156-0203-01
SN7418N	156-0203-00
7420	156-0034-01
7420J	156-0554-01
7420PC	156-0034-00
7420PCQR/DCQR	156-0034-02
DM7420N	156-0034-00
N7420A	156-0034-00
N7420NB/FB	156-0034-02
SN7420N	156-0034-00
SN7420J	156-0554-00
DM74H20N	156-1169-00
SN74H20N	156-1169-00
DM74L20N/J	156-0160-00
SN74L20N/J	156-0160-00
74S20	156-0304-01
74S20PC	156-0304-00
74S20DCQR/PCQR	156-0304-02
DM74S20N	156-0304-00
DM74S20NA+/JA+	156-0304-02
N74S20N	156-0304-00
N74S20NB/FB	156-0304-02
SN74S20N	156-0304-00
SN74S20NP3/JP4	156-0304-02
74LS20	156-0464-01
74LS20N/J	156-0464-00
74LS20PC/DC	156-0464-00
DM74LS20N/J	156-0464-00
DM74LS20NA+/JA+	156-0464-02
N74LS20N/F	156-0464-00
SN74LS20N/J	156-0464-00
SN74LS20NDS/JDS	156-0464-02
SN74LS20NP3/JP4	156-0464-02
7421	156-0297-01
7421PC	156-0297-00
7421PCQR/DCQR	156-0297-02
N7421N	156-0297-00
N7421NB/FB	156-0297-02

THIS INDEX IS ARRANGED IN NUMERICAL ORDER, DISREGARDING LETTERS WHICH APPEAR IN SOME VENDOR NUMBERS.

VENDOR NUMBER TO TEK PART NUMBER INDEX (CONT)
INTEGRATED CIRCUITS

4

VENDOR NUMBER	PART NUMBER
74H21DC	156-1050-00
DM74H21J	156-1050-00
N74H21F	156-1050-00
SN74H21J	156-1050-00
74LS21	156-0478-01
74LS21PC	156-0478-00
74LS21PCQR/DCQR	156-0478-02
DM74LS21N	156-0478-00
DM74LS21NA+/JA+	156-0478-02
N74LS21N	156-0478-00
N74LS21NB/FB	156-0478-02
SN74LS21N	156-0478-00
SN74LS21NDS/JDS	156-0478-02
SN74LS21NP3/JP4	156-0478-02
74S22PC	156-0404-00
DM74S22N	156-0404-00
N74S22N	156-0404-00
SN74S22N	156-0404-00
SN74S22N/P3	156-0404-01
74LS22	156-0538-01
74LS22PC	156-0538-00
DM74LS22N	156-0538-00
DM74LS22NA+/JA+	156-0538-02
N74LS22N	156-0538-00
SN74LS22N	156-0538-00
SN74LS22NP3/JP4	156-0538-02
7425	156-0165-01
7425J	156-0590-01
7425PC	156-0165-00
7425PCQR/DCQR	156-0165-02
DM7425N	156-0165-00
N7425N	156-0165-00
N7425NB/FB	156-0165-02
SN7425J	156-0590-00
SN7425N	156-0165-00
SN7425N	156-0165-02
7426	156-0112-01
4726J	156-0584-01
7426PC	156-0112-00
7426PCQR/DCQR	156-0112-02
DM7426N	156-0112-00
DM7426NA+/JA+	156-0112-02
N7426A	156-0112-00
N7426NP3/JP4	156-0112-02
SN7426N	156-0112-00
SN7426NP3/JP4	156-0112-02
SN7426J	156-0584-00
74LS26PC/DC	156-0970-00
74LS26PCQR/DCQR	156-0970-03
N74LS26N/F	156-0970-00
N74LS26NB/FB	156-0970-03
SN74LS26N/J	156-0970-00
SN74LS26NP3/JP4	156-0970-03
7427	156-0178-01
7427J	156-0609-01
7427PC	156-0178-00
DM7427N	156-0178-00
SN7427N	156-0178-00
SN7427N	156-0178-01
SN7427N	156-0178-02
74LS27	156-0718-00
74LS27PCQR/DCQR	156-0718-03
N74LS27N	156-0718-00
N74LS27NB/FB	156-0718-03
SN74LS27N	156-0718-00
SN74LS27NP3/JP4	156-0718-03
SN74LS27NDS/JDS	156-0718-03
7428	156-0374-01
DM7428N	156-0374-00
N7428A	156-0374-00
N7428NB/FB	156-0372-02
SN7428N	156-0374-00
SN7428NP3/JP4	156-0374-02
7430	156-0035-01
7430J	156-0555-01

VENDOR NUMBER	PART NUMBER
7430PC	156-0035-00
7430PCQR/DCQR	156-0035-02
DM7430N	156-0350-00
N7430A	156-0035-00
N7430NB/FB	156-0035-02
SN7430N	156-0035-00
SN7430NP3/JP4	156-0035-02
SN7430J	156-0555-00
MM74C30JA+	156-1397-00
74L30	156-0267-01
DM74L30N/J	156-0267-00
SN74L30N/J	156-0267-00
74S30PC/DC	156-0418-00
DM74S30N/J	156-0418-00
DM74S30NA+/JA+	156-0418-01
N74S30N/F	156-0418-00
SN74S30N/J	156-0418-00
SN74S30NP3/JP4	156-0418-01
74LS30	156-0465-01
74LS30PC/DC	156-0465-00
DM74LS30N/J	156-0465-00
DM74LS30NA+/JA+	156-0465-02
N74LS30N/F	156-0465-00
SN74LS30N/J	156-0465-00
SN74LS30NDS	156-0465-02
SN74LS30NP3/JP4	156-0465-02
7432	156-0171-01
7432PC	156-0171-00
7432PCQR/DCQR	156-0171-02
DM7432N	156-0171-00
DM7432NA+/JA+	156-0171-02
N7432A	156-0171-00
N7432NB/FB	156-0171-02
SN7432N	156-0171-00
SN7432NP3/JP4	156-0171-02
74C32	156-0766-01
74C32	156-0766-02
74F32	156-1724-00
MM74C32J/N	156-0766-00
74S32PC	156-0739-00
74S32	156-0739-01
74S32DCQR/PCQR	156-0739-02
SN74S32N	156-0739-00
SN74S32NP3/JP4	156-0739-02
N74S32N	156-0739-00
N74S32NB/FB	156-0739-02
74LS32	156-0479-01
74LS32	156-0479-04
74LS32PC/DC	156-0479-00
74LS32DCQR	156-0479-04
74LS32PCQR/DCQR	156-0479-02
DM74LS32N/J	156-0479-00
DM74LS32NA+/JA+	156-0479-02
N74LS32N/F	156-0479-00
N74LS32NB/FB	156-0479-02
SN74LS32N/J	156-0479-04
SN74LS32NDS/JDS	156-0479-04
SN74LS32N/J	156-0479-00
SN74LS32NDS	156-0479-02
SN74LS32NDS	156-0479-03
SN74LS32NP3	156-0479-03
SN74LS32NP3/JP4	156-0479-02
SN74LS32NP3/JP4	156-0479-04
7433	156-0424-01
ITT7433N	156-0424-00
N7433A	156-0424-00
N7433NB/FB	156-0424-02
SN7433N	156-0424-00
SN7433NP3/JP4	156-0424-02
74LS33	156-0730-01
74LS33PC/DC	156-0730-00
74LS33PCQR/DCQR	156-0730-02
DM74LS33N	156-0730-00
N74LS33N/F	156-0730-00
SN74LS33N/J	156-0730-00

VENDOR NUMBER	PART NUMBER
SN74LS33NDS/JDS	156-0730-02
SN74LS33NP3/JP4	156-0730-02
7437	156-0150-01
7437J	156-0591-01
7437PC	156-0150-00
7437PCQR/DCQR	156-0150-02
DM7437N	156-0150-00
DM7437NP3/JP4	156-0150-02
N7437N	156-0150-00
N7437H	156-0591-00
N7437NB/FB	156-0150-02
SN7437N	156-0150-00
DM7437J	156-0591-00
N7437FH	156-0591-00
SN7437J	156-0591-00
74S37F	156-1216-00
SN74S37J	156-1216-00
SN74S37JP4	156-1216-01
74LS37	156-0466-01
74LS37PC/DC	156-0466-00
74LS37PCQR/DCQR	156-0466-02
DM74LS37N/J	156-0466-00
N74LS37NB/FB	156-0466-02
N74LS37N/F	156-0466-00
DM74LS37NA+/JA+	156-0466-00
SN74LS37N/J	156-0466-00
SN74LS37NP3/JP4	156-0466-02
7438	156-0145-01
7438J	156-0592-01
7438J	156-0592-02
7438PC/DC	156-0145-00
7438PCQR/DCQR	156-0145-00
ITT7438N	156-0145-00
DM7438N/J	156-0145-00
DM7438N/J	156-0145-02
N7438N/F	156-0145-00
N7438NB/FB	156-0145-02
SN7438N/J	156-0145-00
SN7438N/J	156-0145-02
SN7438J	156-0592-00
74S38FB	156-1393-01
N74S38FB	156-1393-00
SN74S38NP3/JP4	156-1393-00
74LS38	156-0468-01
74LS38	156-0467-01
74LS38PC	156-0467-00
DM74LS38N	156-0467-00
N74LS38N	156-0467-00
SN74LS38N	156-0467-00
SN74LS38NDS	156-0467-02
SN74LS38NP3/JP4	156-0467-02
7440	156-0036-01
7440J	156-0616-01
7440PC	156-0036-00
7440PCQR/DCQR	156-0036-02
DM7440N	156-0036-00
DM7440NA+/JA+	156-0036-02
N7440N	156-0036-00
N7440NB/FB	156-0036-02
SN7440J	156-0616-00
SN7440N	156-0036-00
SN7440NP3/JP4	156-0036-02
74H40PC/DC	156-0156-00
DM74H40N/J	156-0156-00
N74H40N	156-0156-00
SN74H40N	156-0156-01
SN74H40N/J	156-0156-00
74H40	156-0156-00
7441	156-0080-01
7442	156-0061-01
7442J	156-0556-01
7442PC/DC	156-0061-00
7442PCQR/DCQR	156-0061-02
DM7442N/J	156-0061-00
MC7442J	156-0556-00

VENDOR NUMBER	PART NUMBER
MC7442P	156-0061-00
N7442N/F	156-0061-00
N7442NB/FB	156-0061-02
SN7442N/J	156-0061-00
SN7442J	156-0556-00
SN7442N	156-0061-02
74C42	156-0566-01
MM74C42JA+	156-0566-02
74L42	156-0490-01
DM74L42AN	156-0490-00
DM74L42NA+/JA+	156-0490-02
74LS42	156-0736-01
74LS42PC	156-0736-00
74LS42PCQR/DCQR	156-0736-02
DM74LS42N	156-0736-00
DM74LS42NA+/JA+	156-0736-02
N74LS42N	156-0736-00
N74LS42NB/FB	156-0736-02
SN74LS42N	156-0736-00
SN74LS42NDS/JDS	156-0736-02
SN74LS42NP3/JP4	156-0736-02
7444	156-0257-01
7444PC	156-0257-00
N7444N/F	156-0257-00
SN7444AN/J	156-0257-00
7445PC	156-0365-00
DM7445N	156-0365-00
SN7445N	156-0365-00
7447APC/DC	156-0128-00
DM7447AN/AJ	156-0128-00
DM7447AN/AJ	156-0128-01
N7447N/F	156-0128-00
SN7447AN/J	156-0128-00
SN7447AN/J	156-0128-01
DM74LS47N	156-1243-00
DM74LS47NA+/JA+	156-1243-01
SN74LS47N	156-1243-00
SN74LS47NP3/JP4	156-1243-01
74C48	156-0886-01
74C48	156-0886-02
MM74C48J	156-0886-00
MM74C48JA+	156-0886-02
7450PC	156-0190-00
DM7450N	156-0190-00
N7450N	156-0190-00
SN7450N	156-0190-00
7451	156-0037-01
7451PC	156-0037-00
7451PCQR/DCQR	156-0037-02
DM7451N	156-0037-00
DM7451NA+/JA+	156-0037-02
N7451A	156-0037-00
N7451NB/FB	156-0037-02
SN7451N	156-0037-00
SN7451NP3/JP4	156-0037-02
74S51	156-1040-01
74S51	156-1040-02
SN74S51N/J	156-1040-00
74LS51	156-0875-01
74LS51PC/DC	156-0875-00
74LS51PCQR/DCQR	156-0875-02
DM74LS51N/J	156-0875-00
DM74LS51NA+/JA+	156-0875-02
N74LS51N/F	156-0875-00
N74LS51NB/FB	156-0875-02
SN74LS51N/J	156-0875-00
SN74LS51NDS/JDS	156-0875-02
SN74LS51NP3/JP4	156-0875-02
7454	156-0031-01
7454PC	156-0031-00
7454PCQR/DCQR	156-0031-02
DM7454N	156-0031-00
N7454A	156-0031-00
N7454NB/FB	156-0031-02
SN7454N	156-0031-00

VENDOR NUMBER TO TEK PART NUMBER INDEX (CONT)

INTEGRATED CIRCUITS

VENDOR NUMBER	PART NUMBER
SN7454NP3/JP4	156-0031-02
74LS54	156-0452-01
74LS54PC	156-0452-00
74LS54PCQR/DCQR	156-0452-02
DM74LS54N	156-0452-00
DM74LS54NA+/JA+	156-0452-02
N74LS54N	156-0452-00
SN74LS54N/J	156-0452-00
SN74LS54NP3/JP4	156-0452-02
74F64	156-1751-00
74S64	156-0703-01
74S64PC	156-0703-00
74S64PCQR/DCQR	156-0703-02
DM74S64N	156-0703-00
N74S64N	156-0703-00
N74S64NB/FB	156-0703-02
SN74S64N	156-0703-00
SN74S64N3/J4	156-0703-02
HD74S64S	156-1332-00
N74S65A	156-1285-00
N74S65FB	156-1285-00
SN74S64N3	156-1285-00
SN74S65NP3/JP4	156-1285-00
SN74S65J4	156-1285-00
7472	156-0038-01
7472PC/DC	156-0038-00
7472PCQR/DCQR	156-0038-02
DM7472N	156-0383-00
DM7472N/J	156-0038-00
N7472N/F	156-0038-00
N7472NB/FB	156-0038-02
SN7472N/J	156-0038-00
SN7472NP3/JP4	156-0038-02
DM74L72N/J	156-0280-00
SN74L74N/J	156-0280-00
7473	156-0039-01
7473J	156-0557-01
7473PC	156-0039-00
7473PCQR/DCAR	156-0039-02
N7473A	156-0039-00
N7473NB/FB	156-0039-02
SN7473N	156-0039-00
SN7473N	156-0039-02
SN7473J	156-0557-00
74LS73	156-0387-01
74LS73PC/DC	156-0387-00
DM74LS73N/J	156-0387-00
N74LS73N/F	156-0387-00
N74LS73NB/FB	156-0387-02
SN74LS73N/J	156-0387-00
SN74LS73NDS	156-0387-02
SN74LS73NP3	156-0387-02
7474	156-0041-01
7474	156-0041-02
7474	156-0041-03
7474	156-0041-04
7474J	156-0558-01
7474PC/DC	156-0041-00
DM7474N/J	156-0041-00
DM7474NA+/JA+	156-0041-05
ITT7474	156-0041-00
N7474AN/F	156-0041-00
SN7474J	156-0558-00
SN7474N/J	156-0041-00
SN7474NP3/JP4	156-0041-05
μPB7474C	156-0041-00
74F74PC/DC	156-1611-00
74H74PC/DC	156-0155-00
DM74H74N/J	156-0155-00
SN74H74N/J	157-0155-00
SN74H74N/J	156-0155-01
74S74	156-0331-01
74S74PC/DC	156-0331-00
74S74PC/DC	156-0331-02
DM74S74N/J	156-0331-00

VENDOR NUMBER	PART NUMBER
N74S74N/F	156-0331-00
SN74S74N/J	156-0331-00
SN74S74NP3	156-0331-03
74LS74	156-0388-01
74LS74	156-0388-02
74LS74D	156-0388-04
74LS74PC/DC	156-0388-00
74LS74APCQR/DCQR	156-0388-03
DM74LS74N/J	156-0388-00
N74LS74F	156-0388-04
N74LS74N	156-0388-00
SN74LS74N/J	156-0388-00
SN74LS74ANDS/JDS	156-0388-03
SN74LS74NP3/JP4	156-0388-03
74ALS74	156-1756-00
7475	156-0040-01
7475J	156-0559-01
7475PC	156-0040-00
7475PCQR/DCQR	156-0040-02
DM7475N	156-0040-00
DM7475NA+/JA+	156-0040-02
N7475N	156-0040-00
N7475NB/FB	156-0040-02
SN7475N	156-0040-00
SN7475J	156-0559-00
SN7475NP3/JP4	156-0040-02
74LS75	156-0735-01
DM74LS75N	156-0735-00
DM74LS75NA+/JA+	156-0735-02
N74LS75N	156-0735-00
SN74LS74N	156-0735-00
SN74LS75NDS/JDS	156-0735-02
SN74LS75NP3/JP4	156-0735-02
7476 OLD FAV	156-0042-01
7476J	156-0560-01
7476PC	156-0042-00
ITT7476N	156-0042-00
N7476B	156-0042-00
N7476NB/FB	156-0042-02
SN7476N	156-0042-00
SN7476J	156-0560-00
SN7476NP3/JP4	156-0042-02
74LS76	156-0731-01
DM74LS76N/J	156-0731-00
DM74LS76NA+/JA+	156-0731-02
N74LS76N/F	156-0731-00
N74LS76NB/FB	156-0731-02
SN74LS76AN/J	156-0731-00
SN74LS76AN	156-0731-00
SN74LS76NP3/JP4	156-0731-02
74L78PC	156-0161-00
DM74L78N/J	156-0161-00
MC74L78P	156-0161-00
SN74L78N/J	156-0161-00
7480PC	156-0086-00
N7480A	156-0086-00
SN7480N	156-0086-00
7483	156-0087-01
7483APC/DC	156-0087-00
7483PCQR/DCQR	156-0087-02
DM7483N/J	156-0087-00
DM7483NA+/JA+	156-0087-02
N7483N/F	156-0087-00
N7483NB/FB	156-0087-02
SN7483AN/J	156-0087-00
SN7483NP3/JP4	156-0087-02
SN74LS83N	156-0468-00
7485	156-0123-01
7485PC	156-0123-00
7485PCQR/DCQR	156-0123-02
DM7485NA+/JA+	156-0123-02
N7485B	156-0123-00
N7485NB/FB	156-0123-02
SN7485N	156-0123-00
SN7485NP3/JP4	156-0123-02

VENDOR NUMBER	PART NUMBER
74S85	156-1041-01
74S85F	156-1041-00
N74S85FB	156-1041-02
SN74S85JP4	156-1041-02
SN74S85J	156-1041-00
74LS85	156-0953-01
74LS85PC/DC	156-0953-00
DM74LS85NA+/JA+	156-0953-02
N74LS85N/F	156-0953-00
N74LS85NB/FB	156-0953-03
SN74LS85N/J	156-0953-00
SN74LS85J	156-0953-03
SN74LS85NDS/JDS	156-0953-02
SN74LS85NP3/JP4	156-0953-02
DM74LS85J	156-0953-03
7486	156-0062-01
7486PC/DC	156-0062-00
7486DCQR/PCQR	156-0062-02
DM7486N/J	156-0062-00
DM7486NA+/JA+	156-0062-02
N7486N/F	156-0062-00
N7486NB/FB	156-0062-02
SN7486NP3/JP4	156-0062-02
SN7486N/J	156-0062-00
74C86	156-0786-00
74F86	156-1800-00
74S86	156-0707-01
74S86	156-0707-02
74S86PC/DC	156-0707-00
74S86DCQR/PCQR	156-0707-03
DM74S86N/J	156-0707-00
DM74S86NA+/JA+	156-0707-03
HD74S86S	156-1331-00
N74S86N/F	156-0707-00
N74S86NB/FB	156-0707-03
SN74S86PC	156-0707-00
SN74S86N/J	156-0707-00
SN74S86NP3/JP4	156-0707-03
74LS86	156-0381-01
74LS86PC/DC	156-0381-00
74LS86PCQR/DCQR	156-0381-02
DM74LS86N/J	156-0381-00
DM74LS86NA+/JA+	156-0381-02
N74LS86N/F	156-0381-00
N74LS86NB/FB	156-0381-02
SN74LS86N/J	156-0381-00
SN74LS86NDS/JDS	156-0381-02
SN74LS86NP3/JP4	156-0381-02
74H87	156-0318-01
74H87J	156-0614-01
SN74H87J	156-0614-00
SN74H87N/J	156-0318-00
7488	156-0086-01
7488AJ/N	156-1109-00
7489	156-0192-00
SN7489N	156-0192-00
SN7489N3	156-0192-00
MM74C89J	156-0894-00
7490	156-0079-01
7490APC	156-0079-00
7490PCQR/DCQR	156-0079-02
DM7490AN	156-0079-00
N7490	156-0079-00
SN7490AN	156-0079-00
SN7490AN	156-0079-02
SN7490AN/J	156-0395-00
DM74L90N/J	156-0201-00
SN74L90N/J	156-0201-00
74LS90	156-0656-01
74LS90PC/DC	156-0656-00
74LS90PCQR/DCQR	156-0656-02
DM74LS90N/J	156-0656-00
SN74LS90N/J	156-0656-00
SN74LS90NDS/JDS	156-0656-02

VENDOR NUMBER	PART NUMBER
SN74LS90NP3/JP4	156-0656-02
7491PC	156-0194-00
DM7491AN	156-0194-00
N7491N	156-0194-00
SN7491AN	156-0194-00
7492	156-0114-01
7492PCQR/DCQR	156-0114-02
DM7492AN/J	156-0114-00
DM7492NA+/JA+	156-0114-02
N7492N/J	156-0114-00
N7492NB/FB	156-0114-02
SN7492PC/DC	156-0114-00
SN7492AN/J	156-0114-00
SN7492NP3/JP4	156-0114-02
74LS92	156-1108-02
74LS92P	156-1108-00
SN74LS92N/J	156-1108-00
SN74LS92P3/JP4	156-1108-02
7493	156-0032-01
7493	156-0032-02
7493PC	156-0032-00
7493PCQR/DCQR	156-0032-03
DM7493N	156-0032-00
7493J	156-0561-01
N7493A	156-0032-00
N7493NB/FB	156-0032-03
SN7493N	156-0032-00
SN7493AJ	156-0561-00
74L93	156-0101-01
DM74L93N/J	156-0101-00
SN74L93N/J	156-0101-00
74LS93	156-0646-01
74LS93PC	156-0646-00
74LS93PCQR/DCQR	156-0646-02
DM74LS93N	156-0646-00
DM74LS93NA+/JA+	156-0646-02
N74LS93N	156-0646-00
N74LS93NB/FB	156-0646-02
SN74LS93PC	156-0646-00
SN74LS93NDS/JDS	156-0646-02
SN74LS93NP3/JP4	156-0646-02
7495	156-0120-01
7495J	156-0602-01
7495PC/DC	156-0120-00
7495PCQR/DCQR	156-0120-02
DM7495NA+/JA+	156-0120-02
DM7495N/J	156-0120-00
N7495AN/F	156-0120-00
SN7495AN/J	156-0120-00
SN7495J	156-0602-00
SN7495NP3/JP4	156-0120-02
74LS95	156-0389-01
74LS95PC/DC	156-0389-00
DM74LS95N/J	156-0389-00
N74LS95N/F	156-0389-00
SN74LS95BN/J	156-0389-00
7496	156-0073-02
7496PC	156-0073-00
7496PCQR/DCQR	156-0073-01
N7496NB/FB	156-0073-01
SN7496N	156-0073-00
SN7496NP3/JP4	156-0073-01
74LS96	156-1275-01
N74LS96N	156-1275-00
N74LS96FB/NB	156-1275-02
SN74LS96N	156-1275-00
SN74LS96NP3/JP4	156-1275-02
7497	156-0311-01
7497DCQR	156-0311-02
7494PC/DC	156-0311-00
SN7497N/J	156-0311-00
SN7497NP3/JP4	156-0311-02
7510A	156-0177-01
AD7511	156-0723-01
AD7511DIKN/KD	156-0723-00

4

THIS INDEX IS ARRANGED IN NUMERICAL ORDER, DISREGARDING LETTERS WHICH APPEAR IN SOME VENDOR NUMBERS.

VENDOR NUMBER TO TEK PART NUMBER INDEX (CONT)

INTEGRATED CIRCUITS

4

VENDOR NUMBER	PART NUMBER
MP7520LN	156-0719-01
MP7523JN	156-1366-00
MP7524JN	156-1367-00
AD7528	156-1815-00
AD7533LN	156-0719-00
IM7552CDE	156-0291-00
ICM7555/IPA	156-1408-00
MP7621KN	156-1548-00
MC7805CP	156-0501-00
MC7805CT	156-0277-00
MC7805CTD	156-0277-01
MC78L05ACPD	156-0991-00
MC78L05ACPD	156-0991-01
µA78L05WCQR	156-0991-01
µA78M05CKF	156-1263-00
µA78L05AWC	156-0991-00
µA7805UCQR	156-0277-01
µA7805UC	156-0277-00
LM78L08ACH	156-1244-00
MC78L08ACG	156-1244-00
7812	156-0285-01
7812CU	156-0285-00
MC7812CT	156-0285-00
SG7812APC	156-0285-02
µA7812CTD	156-0285-01
MC78L12ACG	156-1160-00
MC78L12D	156-1160-01
µA78L12AHC	156-1160-00
7815CU	156-0312-00
MC7815CJ	156-0312-00
SG7815ACP	156-0988-00
µA7815UC	156-1302-00
µA7815UC	156-0312-01
MC78L15ACP	156-1261-00
MC78L15ACP	156-1261-01
MC78L15ACPD	156-1261-02
µA78L15AWC	156-1261-00
µA78M15CKF	156-1262-00
µA78HV15CU	156-0988-00
ICM7818BIPI	156-1622-00
SG7818CP	156-0264-00
µA7818UC	156-0264-00
µA78HV18CU	156-0264-00
MC7824CT	156-0926-00
µA7824UC	156-0926-00
µA78HV24CU	156-0926-00
µA78S40PC	156-1283-00
LM7905ACZ	156-1150-00
LM7905CT	156-0846-00
MC7905CT	156-0846-00
SG7905CP	156-0846-00
UA7905KC	156-0846-00
MC79L05ACP	156-1150-00
MC79L05ACP	156-1150-01
7912	156-0872-02
LM7912CT	156-0872-00
MC7912CT	156-0872-00
MC7912CTD	156-0872-01
MC7912C	156-0872-01
UA7912UCQR	156-0872-01
MC7912ACG	156-1202-00
MC79L12ACGD	156-1207-01
LM79M12CH	156-1604-00
LM79M12CPTB	156-1264-00
UA79M12AHC	156-1604-00
µA79M12CKF	156-1264-00
MC7915CT	156-0527-00
MC7915CT	156-0527-01
SG7915CP	156-0527-00
µA7915CKC	156-0527-00
LM79L15ACZ	156-1260-00
MC79L15ACPD	156-1261-02
MC79L15ACP	156-1260-00
DM8000N/J	156-0030-00
AMZ8001ADC	156-1525-00
AMZ8002ADC	156-1558-00

VENDOR NUMBER	PART NUMBER
Z8002A	156-1558-00
DM8003	156-0186-02
DM8006	156-0153-02
8008	156-0454-00
DM8008	156-0129-02
DM8008NA+/JA+	156-0129-02
IC8008	156-0454-01
DM8011N	156-0163-00
ADC80AG-12	156-1307-00
DM8016	156-0094-01
DM8017NA+/JA+	156-0140-02
DM8020	156-0034-02
DM8030	156-0035-02
CI/DI8031	156-1684-00
P/D8035	156-1434-00
P8039	156-1387-00
DM8059N	156-1187-00
INS8060N	156-1212-00
8060	156-1212-00
8060DJA+	156-1212-01
ICL8069DC	156-1586-00
ICL8069CCSQ	156-1490-00
8080A	156-0954-01
8080AC	156-0954-00
8080AD	156-0954-00
C8085A	156-1087-00
C8085A	156-1088-00
D8085A	156-1088-00
D/P8085AB	156-1088-01
D8085A-2	156-1088-02
D8086	156-1416-00
D8087	156-1643-00
Z8087	156-1793-00
D8088	156-1609-00
DM8090N	156-0406-00
8092	156-0473-01
DM8092N	156-0473-00
DM8092NA+/JA+	156-0473-02
DM8094N	156-0396-01
DM8094N/J	156-0396-00
DM8094N/A+	156-0396-02
8097	156-0535-01
MM80C97J	156-0649-00
MM80C97JA+	156-0649-02
DM80L97N	156-0535-00
80L97	156-0787-01
DM80L97N	156-0787-00
DM80L97NA+/JA+	156-0535-02
MM80C98J	156-1341-00
MM80C98JA+	156-1341-01
DM80L98N	156-0729-00
DM80L98NA+/JA+	156-0729-01
AMZ8103PC/DC	156-1597-00
DM8121N/J	156-0397-01
DM8130	156-0537-01
DM8130N	156-0537-00
8136	156-0539-01
DM8136N	156-0539-00
DM8136NA+	156-0539-02
8155	156-1730-00
DAC-08156Q	156-1255-01
DM8160	156-0845-01
DM8160N	156-0845-00
DM8160N/A+	156-0845-02
CM8180	156-0423-00
AM81LS95NB/JB	156-1277-00
DM81LS95NA+/J+	156-1277-00
SG8195	156-0208-00
81LS97	156-0916-01
AM81LS97NB/JB	156-0916-02
DM81LS97N	156-0916-00
DM81LS97NA+/JA+	156-0916-02
AM81LS98PCB/DCB	156-1479-01
DM81LS98N/J	156-1479-00
DM81LS98JA+/JA+	156-1479-01
DM81LS98PC/DC	156-1479-00

VENDOR NUMBER	PART NUMBER
DM81LS98JA+/NA+	156-1479-01
8201	156-0601-01
DM8201N	156-0123-00
MC8201	156-0152-01
RC8201R	156-0601-00
S8201N	156-0152-00
8202	156-0250-01
D8202	156-1442-00
D8202A	156-1599-00
N8202N	156-0250-00
8203	156-0249-01
N8203N	156-0249-00
N8205F	156-0262-00
N8205N	156-0357-00
N8205N	156-0358-00
N8205N	156-0359-00
N8205N	156-0360-00
N82S09-I	156-1171-00
8212	156-0962-00
8213N	156-0078-00
8214	156-0963-00
8223	156-0533-00
D8224	156-0945-00
QD8224	156-0945-01
DP8224D	156-0945-00
µPB8224D	156-0945-00
µPB8224D	156-0945-01
AM8224D	156-0945-00
AM3224DCB	156-0945-01
N82S25N/F	156-0199-00
8228	156-0166-00
8228	156-0947-01
D8228	156-0947-00
D8228	156-0947-02
AM8228D	156-0947-00
DP8228D	156-0947-00
µPB8228D	156-0947-00
N8234N/F	156-0336-00
N8234NB/FB	156-0336-01
D/P8238	156-1203-00
DP8238J/D	156-1203-00
µPB8238C/D	156-1203-00
N8241N	156-0322-00
N8243N	156-0416-00
D/P8243	156-1356-00
D/P8243	156-1356-01
µPB8243C/D	156-1356-00
8244D	156-1428-00
INS8250DA+/NA+	156-1336-00
INS8250BD/N	156-1336-01
D8251A	156-0877-00
8251A	156-0877-04
P/D8251A	156-0877-04
Q/P/D8251A	156-0877-01
D/P8251	156-0877-02
µBD8251C/D	156-0877-02
QD8253	156-1036-01
AM8255APCB/DCB	156-1570-00
QP/D8255A	156-1570-00
D/P8257	156-1202-00
QD8259A	156-1204-01
P8259	156-1204-00
82S62N/J	156-1084-00
N82S62N/F	156-1084-00
82S70NB/FB	156-1328-00
N8271B	156-0919-00
RC8271DD	156-0919-00
8272	156-1412-00
N8273N	156-0497-00
N8273NB/FB	156-0497-02
8274N	156-0498-01
C/D8274	156-1656-00
N8274N	156-0498-00
D/P8275	156-1455-00
DS8275N/J	156-1455-00

VENDOR NUMBER	PART NUMBER
DM8283N/J	156-0087-00
D8284A	156-1428-02
AD/D8284A	156-1428-02
QD/D82S88	156-1427-00
N82S90N	156-0482-00
N8290A	156-0097-00
D8291	156-1257-00
8292	156-0091-01
N8292A	156-0091-00
8X300-IZA	156-1164-00
DP8303N/J	156-1597-00
8308A-750	156-1100-00
P8308	156-0892-00
C8316	156-0710-00
83S25	156-0199-01
SC8331P	156-0076-00
EA8332A-PC377A	156-1002-00
EA8332A-PC379A	156-1010-00
EA8332A-PC378A	156-1004-00
EA8332A-PC380A	156-1012-00
EA8332A-DC	062-5549-00
EA8332A-PC	062-5549-01
N8T380A	156-0456-00
MB8414E/C	156-1301-00
MB8414E	156-1359-00
MB8414E	156-1359-02
MC8505P	156-0944-00
MC8506P/L	156-1314-00
MC8507	156-1066-00
8551	156-0398-01
DM8551N/J	156-0398-00
DM8551NA+/JA+	156-0398-02
DM8556N	156-1054-00
DM8556NA+/JA+	156-1054-01
DM85L60N/J	156-0245-00
DM8572N	156-0073-00
DM8574N	156-0737-00
DM8578N	156-0785-00
8599	156-0339-01
8599	156-0339-02
DM8599N	156-0339-00
DM8601J	156-0622-00
DM8602N/J	156-0405-00
DM8602J	156-0623-00
SP8610M	156-1302-00
SP8611BDG/DG	156-1302-01
SP8627DG/DP	156-1449-00
SP8629DPB	156-1248-00
SP8630BDP/DG	156-0278-00
8633N	156-1125-00
8640	156-1055-00
DS8640N	156-1055-00
8641CJ	156-1548-00
86L42NA+/JA+	156-0490-02
8647	156-1739-00
86LS62	156-1251-00
DS8654N/J	156-1454-00
DS8654NA+/JA+	156-1454-01
DM86LS62JA+	156-1251-00
DM8678CAB/N	156-1170-00
C08684	156-0235-00
C08685	156-0231-00
C08686	156-0232-00
C08687	156-0233-00
C08688	156-0234-00
8701CN	156-1595-00
D8741A	156-1365-00
D8748	156-1364-00
QC/QD8755A	156-1531-00
D8808	156-1609-00
DS88L12N/J	156-1347-00
N8815N	156-1053-00
D8824	156-0945-01
AM8824DCB	156-0945-01
DS8830N/J	156-0181-00

VENDOR NUMBER TO TEK PART NUMBER INDEX (CONT)

INTEGRATED CIRCUITS

VENDOR NUMBER	PART NUMBER
DS8831N	156-0506-00
8833	156-0531-01
DM8833NA+/JA+	156-0531-02
DM8833N	156-0531-00
8836	156-0456-01
DS8836N	156-0456-00
DS8836NA+/JA+	156-0456-02
DS8837N	156-0455-00
8837	156-0455-01
DM8837N/A+	156-0455-02
AM8838N/J	156-0653-00
AM8838NB/JB	156-0653-02
DM8838N/J	156-0653-00
DS8838N	156-0653-01
DS8838NA+/JA+	156-0653-02
DM8842	156-0061-02
DM8849N	156-0111-00
DM8850N	156-0081-00
DM8852	156-0072-02
DS8856N	156-1110-00
DS8863N/J	156-1407-00
MC8871	156-0046-00
SL08871	156-0049-00
8880	156-0284-01
8880	156-0284-02
DS8880N	156-0284-00
DS8880N	156-0284-03
N8881N	156-0917-00
DM8906J	156-0622-00
9000PC	156-0184-00
SCM9001DC	156-0862-00
SCM9001DC	156-0862-02
9007P	156-1763-00
9016DC	156-0029-00
9020	156-0196-00
AM9101BPC	156-0698-00
9S109PC/DC	156-1061-00
AM9111DDC	156-1188-00
9114BDC	156-1028-00
AM91L14BDC	156-1127-00
HAO-0911-6	156-0904-00
9124E	156-1400-00
AM91L24CDC	156-1323-00
9130A	156-0873-01
9130A	156-0873-02
9130B	156-1042-01
AM9130APC/ADC	156-0873-00
AM9130BDC	156-1042-00
9140BDC	156-0987-00
AM9140B	156-0987-01
9S174	156-0738-00
AM9208BPC	156-0890-00
AM9208BDC	156-0891-00
AM9208BDC	156-0889-00
AM9208BDC	156-1139-00
AM9208BDC	156-1140-00
AM9208BDC	156-1141-00
AM9208BDC	156-1142-00
AM9208BDC	156-1143-00
AM9208BDC	156-1144-00
AM9308BDC	156-1145-00
AM9208BPC(30073)	156-0892-00
SG9257	156-0933-00
AM9295	156-1057-00
9300PC	156-0083-00
9300PC/DC	156-0083-00
9300PC/DC	156-0082-01
9300PC/DC	156-0083-02
93L00PC	156-0309-00
F93L00PC	156-0309-00
9304	156-0148-01
9304PCQR/DCQR	156-0148-02
AM9304PC	156-0148-00
9307PC	156-0375-00
9308	156-0521-01

VENDOR NUMBER	PART NUMBER
9308PC	156-0521-00
AM9308PC	156-0521-00
AM9308PCB2	156-0521-02
93L08	156-0220-01
93L08PC/DC	156-0220-00
F93L08PC/DC	156-0220-00
93L09PC	156-1186-00
9310PC	156-0084-00
9310PC	156-0084-01
9310PCQR/DCQR	156-0084-02
AM9310PC	156-0084-00
AM93S10PC/DC	156-1394-00
93S10PC/DC	156-1394-00
93L14	156-0327-01
93L14DC	156-0327-00
93L16	156-0741-01
93L16PC	156-0741-00
93L16PC/DC	156-0741-00
F93S16DC	156-1044-00
F93S16DCQR	156-1044-01
9318	156-0219-01
9318DCQR	156-0219-02
9318PC/DC	156-0219-00
93L21PC/DC	156-0314-00
93L22	156-0488-01
93L22PC	156-0488-00
9324	156-0654-01
9324PC	156-0654-00
9328	156-0085-01
9328PC	156-0085-00
93L28	156-0310-02
F93L28PC	156-0310-00
93L28PC/DC	156-0939-00
AM9328PC	156-0085-00
9334	156-0218-01
9334PC/DC	156-0218-00
9334PCQR/DCQR	156-0218-02
93L34	156-0544-01
93L34PC/DC	156-0544-00
93L34PCQR/DCQR	156-0544-02
9341PC/DC	156-0351-00
9345PC	156-0365-00
93S47DC	156-1063-00
93S47DCQR	156-1063-01
93S47PC	156-1063-02
9368DC	156-0493-00
9368PC	156-0493-01
9368PC	156-0493-02
SG9399	156-0130-01
9401	156-0969-01
F9401DC	156-0969-00
F9401DCQR	156-0969-02
9406PC/DC	156-1399-00
SG9427	156-0512-02
9601	156-0081-01
9601DC	156-0622-01
9601PC/DC	156-0081-00
9601PCQR/DCQR	156-0081-02
AM9601DC	156-0622-00
MC9601P/L	156-0081-00
MC9601	156-0081-02
MC9601L	156-0622-00
9602	156-0405-01
9602	156-0405-02
9602DC	156-0623-00
9602DC	156-0623-02
9602L	156-0623-00
9602PC/DC	156-0405-00
9602PCQR/DCQR	156-0405-03
MC9602P/L	156-0405-00
MC9602PDS/LDS	156-0405-03
N9602NB/FB	156-0405-03
N9602N/F	156-0405-00
DM9602NA+/JA+	156-0405-03
96L02	156-0487-01

VENDOR NUMBER	PART NUMBER
96L02PCQR/DCQR	156-0487-02
AM96L02PC	156-0487-00
DM96L02NA+	156-0487-02
SN96L02NB2	156-0487-02
AM9602DC	156-0623-00
N9602F	156-0623-00
96LS02PCQR/DCQR	156-1335-00
96S02PCQR/DCQR	156-1645-00
9614DC	156-0275-00
9614PC/DC	156-0275-01
9614PCQR	156-0275-01
9615DC	156-0274-00
9615DCQR	156-0274-01
AM9615PC	156-0274-00
9616EDC	156-1544-00
SP9685CM	156-1344-00
AM9701CN	156-1256-00
SG9872	156-0495-02
9900	156-0935-02
SBP9900AJC	156-1404-00
TMS9900J	156-0935-00
TMS9900	156-0935-03
S9900D/E	156-0935-01
TMS9901JL	156-1296-00
TMS9902JL	156-1295-00
TMS9904AJL	156-1692-00
9914	156-1444-00
9914-N	156-1444-01
TMS9914NL/JL	156-1444-00
TMS9914AJL	156-1444-02
TMS9914AJL	156-1444-02
TMS9914ANL	156-1441-01
9927JP4	156-1386-01
TMS9927JL	156-1386-00
SG9976	156-0933-01
9997DC	156-0016-00
F10010DC	156-0870-00
F10016DC	156-1038-00
OP-10-057Y	156-1532-00
N10100B	156-1287-00
10100PC	156-1287-00
MC10100P	156-1287-00
10101	156-0631-01
SP1010E	156-0631-01
MC10101	156-1631-00
MC10101P1	156-0631-03
UPB10101C	156-0631-00
MC10H101LD/PD	156-1668-00
MC10H101PD/LD	156-1733-00
10102	156-0205-01
10102FB	156-0205-02
10102N/F	156-0205-00
μPB10102C/D	156-0205-00
F10102PC/DC	156-0205-00
F10102PCQR/DCQR	156-0205-02
MC10102P/L	156-0205-00
MC10H102L/P	156-1641-00
MC10H102LD/PD	156-1641-01
SN10102N/J	156-0205-00
10103	156-0759-01
10103B/F	156-0759-00
F10103PC/DC	156-0759-00
MC10103L/P	156-0759-00
SN10103N/J	156-0759-00
MC10104L	156-0458-00
MC10104P1	156-0458-01
MC10H104LD/PD	156-1674-00
10105	156-0182-01
MC10105P	156-0182-00
MC10H105L/P	156-1642-00
MC10H105LD/PD	156-1642-01
10106	156-0252-01
10106B/F	156-0252-00
F10106PC/DC	156-0252-00

VENDOR NUMBER	PART NUMBER
MC10106P/L	156-0252-00
10107	156-0295-01
MC10107	156-0295-00
MC10107P1	156-0295-02
MC10107LD/PD	156-1676-00
NPB10107D	156-0295-00
10109N/F	156-0229-00
MC10109	156-0229-00
MC10109PDS	156-0229-01
μPB10109C	156-0229-00
MC10H109LD/PD	156-1682-00
MC10110P	156-0639-00
10111	156-0636-01
10111N	156-0636-00
10111PC	156-0636-00
MC10111P	156-0636-00
MC10111P1/L1	156-0636-02
MC10111P1	156-0636-01
SN10111N	156-0636-00
MC10113	156-0687-00
10115	156-0308-00
10115	156-0308-01
10115N	156-0308-00
10115N	156-0303-04
10115FJ	156-0308-02
SP10115EJ	156-0308-02
SP10115E	156-0308-02
10115FB	156-0308-03
MC10115P/L	156-0308-00
MC10115P1	156-0308-02
MC10115P1	156-0308-04
10116	156-0860-01
10116F	156-0860-00
10116N	156-0860-02
MC10116L	156-0860-00
MC10116P1	156-0860-02
MC10H116L/P	156-1640-00
MC10H116LD/PD	156-1640-01
10H116	156-1698-00
MC10H117PD/LD	156-1710-00
MC10118L	156-1214-00
10H121	156-1794-00
10123F	156-1592-00
F10123DC	156-1592-00
MC10123L	156-1592-00
10124	156-0368-03
MC10124L	156-0368-00
10125	156-0316-01
10125FB	156-0316-03
10125FJ	156-0316-02
HD10125S	156-1334-00
MC10125P	156-0316-00
MC10125L	156-0316-02
10130B	156-1247-00
10130FB/NB	156-1247-01
10130DC	156-1247-00
F10130PCQR/DCQR	156-1247-01
MC10130P	156-1247-00
MC10130P1/L1	156-1247-01
10131	156-0230-01
F10131PC/DC	156-0230-00
MC10131P/L	156-0230-00
MC10131LDS	156-0230-02
N10131N/F	156-0230-00
μPB10131PC/D	156-0230-00
MC10H131LP	156-1639-00
MC10H131LD/LP	156-1639-01
MC10133P	156-0520-00
MC10133P1	156-0520-01
MC10134P/L	156-1020-00
10135FB	156-0688-01
MC10135L	156-0688-00
MC10136L	156-0641-00
MC10136LDS	156-0641-01
μPB10136D	156-0641-00

4

THIS INDEX IS ARRANGED IN NUMERICAL ORDER, DISREGARDING LETTERS WHICH APPEAR IN SOME VENDOR NUMBERS.

VENDOR NUMBER TO TEK PART NUMBER INDEX (CONT)
INTEGRATED CIRCUITS

4

VENDOR NUMBER	PART NUMBER
MC10137L	156-0510-00
MC10138L	156-0642-00
MC10138L1	156-0642-01
10139F	156-1037-00
MCM10139	156-1037-00
10141DCQR	156-0638-02
10141DC	156-0638-00
MC10141L	156-0638-00
MC10141P1/L1	156-0638-01
MC10141L1	156-0638-02
F10144DC	156-0657-02
MCM10144	156-0657-01
MCM10144L	156-0657-01
MCM10144L	156-0657-02
RC10144	156-0657-00
µPD10144D	156-0657-00
µPD10144D	156-0657-02
MC10145L	156-0847-00
MC10145LDS	156-0847-01
MC10146L	156-0761-00
10146	156-0761-00
10147DC	156-1035-01
MCM10147LDS	156-1035-01
MCL10147L	156-1035-00
MCM10149L	156-1673-00
10153DC	156-0762-00
10153F	156-0762-00
MC10153L	156-0762-00
SN10153J	156-0762-00
MC10158P	156-0746-00
MC10158P1/L1	156-0746-01
10159	156-1706-00
10160F	156-0771-00
F10160DC	156-0771-00
F10160DCQR/PCQR	156-0771-00
MC10160L	156-0771-00
MC10160P1/L1	156-0771-01
SN10160J	156-0771-00
10161DC	156-0920-00
F10161DCQR/PC	156-0920-01
MC10161L	156-0920-00
MC10161P1/L1	156-0920-01
10162F	156-1495-00
F10162DC	156-1495-00
MC10162L	156-1495-00
MC10164L	156-0640-00
MC10H164LD/PC	156-1667-00
10165FB	156-1022-01
MC10165L	156-1022-00
N10165F	156-1022-00
10166DC	156-1023-00
10166DCQR	156-1023-01
MC10166L	156-1023-00
10171F	156-1538-00
F10171DC	156-1538-00
MC10171L	156-1538-00
MC10171P1/L1	156-0758-01
10172F	156-0758-00
F10172DC	156-0758-00
MC10172L	156-0758-00
SN10172J	156-0758-00
MC10173	156-0632-01
MC10173L	156-0632-00
MC10174P	156-0637-00
MC10174P1	156-0637-01
10H174	156-1795-00
10175F	156-0760-00
F10175DC	156-0760-00
MC10175L	156-0760-00
SN10175J	156-0760-00
MC10176L	156-0633-00
MC10176L1	156-0633-02
MC10H176PD/LD	156-1712-00
10180DCQR	156-1374-00
10181F	156-0863-01

VENDOR NUMBER	PART NUMBER
MC10181L	156-0863-00
MC10181L1	156-0863-01
MC10186L	156-0743-00
MC10186L1	156-0743-01
10188N	156-0543-00
10188NB/FB	156-0543-01
10189N	156-0542-00
10189N	156-0542-01
MC10189P	156-0542-01
MC10194PD/LD	156-1657-00
MC10195L	156-0630-00
MC10195P1	156-0630-01
MC10197P/L	156-1021-00
MC10198P/L	157-1713-00
SG10203(339J)	156-0411-02
10210DC	156-1019-00
MC10210P/L	156-1019-00
MC10H210	156-1711-00
10211N	156-0757-00
F10211DC	156-0757-00
MC10211P/L	156-0757-00
MC10211P1/L1	156-0757-01
SN10211N/J	156-0757-00
10212B	156-0848-00
F10212DCQR	156-0848-01
MC10212P/L	156-0848-00
MC10212P1/L1	156-0848-01
10216L	156-0369-01
10216	156-0755-00
10216	156-0755-01
10216N	156-0369-00
10216NB/FB	156-0367-03
F10216DC	156-0367-03
MC10216P/L	156-0369-00
10231	156-0880-01
10231	156-0880-03
10231DC	156-0880-00
MC10231L	156-0880-00
MC10231P1/L1	156-0880-02
10405DC	156-1035-00
10405DC	156-1035-01
F10410DC	156-0657-00
10415A	156-0761-01
10415ADC	156-0761-00
HM10422	156-1635-00
MBM10422	156-1635-00
C10439	156-1132-00
F10470DC	156-1227-00
F10470DC	156-1227-01
B10470	156-1227-00
HM10470DG	156-1227-00
MBM10470	156-1227-00
MBM10474	156-1679-00
OP-11050Y	156-1537-00
AD11/297	156-1367-00
H11CX570	156-1238-00
LF11508D	156-1270-00
HM11CX604	156-1238-00
H11AX940	156-0885-02
MC12040L	156-0518-00
12061	156-0624-01
MC12061P	156-0624-00
EA1208-2	156-0216-00
EA1210-7	156-0217-00
LF13202N	156-0911-00
LF13333	156-1211-01
LF13333N	156-1211-00
MC14001BCL	156-0349-05
MC14001BCLD	156-0349-06
MC14001UBCL	156-0349-00
MC14001UBCLD	156-0349-03
MC14002BCL	156-0754-00
MC14002BCLD	156-0754-02
MC14006BCL	156-0681-00
MC14006BCLDS	156-0681-02

VENDOR NUMBER	PART NUMBER
MC1400U6	156-1812-00
MC14008BCLD	156-0502-02
MC14008UBAL	156-0502-00
MC14011BCLD	156-0350-05
MC14011BCLD	156-0350-06
MC14011CL	156-0350-00
MC14011UBCL	156-0350-00
MC14011UBCLD	156-0350-02
MC14012BCL	156-0793-00
MC14012BCLD	156-0793-02
MC14013BCL	156-0366-00
MC14013BCLD	156-0366-02
MC14013BCLD	156-0366-03
MC14014BCL	156-0568-00
MC14015BCL	156-0801-00
MC14015BCLD	156-0801-01
MC14017BCL	156-0799-00
MC14017BCLD	156-0799-01
MC14018BCLD	156-0519-01
MC14020BCL	156-0895-00
MC14020BCLD	156-0895-01
14021A	156-0576-01
MC14021BCL	156-0576-00
MC14021BCLD	156-0576-02
MC14022BCLD	156-1369-00
MC14023BCL	156-0524-00
MC14023BCLDS	156-0524-02
MC14024BCL	156-0523-00
MC14024BCLD	156-0523-01
14025	156-0575-01
MC14025BCL	156-0575-00
MC14025BCLD	156-0575-03
MC14025UBCL	156-0575-05
MC14027B	156-0525-00
MC14027BCLD	156-0525-03
MC14028BCL	156-0756-00
MC14028BCLD	156-0756-01
MC14035BCL	156-0580-00
MC14035BCLD	156-0580-02
MC14040BCL	156-0545-00
MC14040BCLD	156-0545-01
MC14042BCL	156-0800-00
MC14042BCLD	156-0800-01
MC1404AU5DS	156-1437-00
MC1404AU6DS	156-1436-00
MC14046CP	156-0704-00
MC14046CP	156-0704-01
MC14049UBCL	156-0494-00
MC14049UCBL	156-0493-02
MC14049BCLD	156-0494-02
MC14050BCLD	156-0330-00
MC14050BCLD	156-0330-02
MC14051BCLD	156-0513-02
MC14051BCL	156-0513-00
HD1-4052B	156-0514-00
MC14052BCL	156-0514-00
MC14052BLD	156-0514-01
MC14053BCL	156-0515-00
MC14053	156-0515-03
MC14053BCLD	156-0515-02
MC14066BCL	156-0644-00
MC14066BCLD	156-0644-03
MC14069UBCL	156-0745-00
MC14069UBCLD	156-0745-01
F14070DC	156-1227-01
MC14070BCL	156-0786-00
MC14070BCLD	156-0786-02
14071	156-1340-01
CD14071BFX	156-1340-01
MC14071BCL	156-1340-00
MC14071BCLD	156-1340-01
MC14075BCLDS	156-1480-00
MC14078BCLDS	156-1320-00
MC14081BCL	156-1478-00
MC14081BCLDS	156-1478-01

VENDOR NUMBER	PART NUMBER
AM1408L8	156-0509-00
AM1408L8-B	156-0509-03
MC1408-L8	156-0509-00
MC1408-L8	156-0509-01
MC1408-8N	156-0509-00
MC1408-L8DS	156-0509-03
MC14093BCL	156-0961-00
MC14093BLDS	156-0961-02
MC14094BCLD	156-0796-01
MC14433PD	156-1118-00
MC14433P	156-1154-00
MC14435FL	156-0749-00
14490	156-0763-01
MC14490VL	156-0763-00
MC14490BCLD	156-0763-02
MC14504BCLD	156-1487-00
MC14508BCL	156-0897-00
MC14511BCLD	156-0795-01
MC14511BCL	156-0795-00
MC14512BCLD	156-1486-00
MC14516CP	156-0582-01
MC14516BCL	156-0582-00
MC14516BCLD	156-0582-02
MC14516BCLD	156-0582-03
MC14518BCLD	156-0751-01
MM14518BCJA+	156-0752-01
CD14518BCJ	156-0752-00
SIL14518BF	156-0752-00
MC14518BCL	156-0752-00
14519C	156-0505-01
MC14519BCL	156-0505-00
MC14519BCLD	156-0505-02
14520	156-0579-01
MC14520BCL	156-0579-00
MC14520BCLD	156-0579-02
MC14521BCL	156-0864-00
MCM14521BCLD	156-0864-01
MM14521BCJA+	156-0864-01
14528	156-0578-01
MC14528BCL	156-0578-00
MC14528BCLDS	156-0578-02
MC14532BCL	156-1282-00
MC14538BCL	156-1152-00
MC14538SBCLDS	156-1152-01
MC14553BCL	156-0896-00
MC14553BCLD	156-0896-01
MC14555BCL	156-1368-00
MC14556BCL	156-0898-00
MC14556BCLD	156-0898-00
MC14556BCLD	156-0898-01
14559	156-0583-01
MC14559BCPDS/BCLDS	156-0583-02
MC14559BCL	156-0583-00
MC14559BP	156-0583-00
MC14559BLCD	156-0583-03
14572	156-0767-01
MC14572BCLD	156-0767-02
HD14572UBC	156-0766-02
MC14572UBCP/L	156-0767-00
MC14572UBCLD	156-0767-02
MC14584BCLD	156-0876-02
MC14585BCL	156-0548-00
MC14585BCLD	156-0548-02
HD1-4702BCD	156-0850-00
SN15646N	156-0170-01
SN15830N	156-0187-00
SN15835N	156-0195-00
15837N	156-1124-00
15858N	156-1123-00
15861N	156-1120-00
SN15862N	156-0185-00
15863N	156-1122-00
SL17084L	156-0107-00
HD1-74C00	156-0941-00
HD1-74C08	156-0577-00

VENDOR NUMBER TO TEK PART NUMBER INDEX (CONT)
INTEGRATED CIRCUITS

VENDOR NUMBER	PART NUMBER
HD1-74C10	156-0938-00
HD1-74C14	156-0876-00
HD1-74C32	156-0766-00
HD1-74C42	156-0566-00
HD1-74C48	156-0886-00
HD1-74C89	156-0894-00
TBP18SA030	156-1390-00
TBP18S030	156-0425-00
TBP18SA030	156-1325-00
HD1-80C97	156-0649-00
TBP18S225	156-0960-00
HL18392	156-0010-00
HL18293	156-0012-00
HD18341	156-0011-00
SPX1874-2	156-1237-00
REF02-0402	156-1437-00
ULN2083A-1	156-1527-00
2101-1N	156-0698-00
SY21H01-2	156-1298-00
B2101A-4	156-0698-00
B2101A-4	156-1052-00
2104A-1	156-1185-00
2104A-4	156-0972-00
2104A-4	156-0972-02
2104A-4	156-0972-03
2104A-4	156-0972-04
2104A-4	156-0972-05
2111A-1	156-1188-00
SY2111A-2	156-1188-00
HM2112-1	156-1685-00
2114L2DC	156-1461-00
D2114AL-3	156-1614-00
D2114AL-4	156-1461-00
P2114AL-4	156-1281-00
2117-3	156-0968-00
2117-3	156-0968-02
D2118-4	156-1552-00
2125AL-2	156-1350-00
D2147D-2, 70NS	156-1228-00
2147H-2	156-1690-00
D217HL-3	156-1613-00
D2148HL-3	156-1574-00
UPD2167-3	156-1615-00
SL21721	156-0053-00
SL21770	156-0013-00
SL22602	156-0162-00
SL22648	156-0176-00
SC22689P101	156-0631-02
SC22689P103	156-0759-02
SC22689P105	156-0182-02
SC22689P106	156-0252-02
SC22689P109	156-0229-01
SC22689P110	156-0639-01
SC22689P111	156-0636-02
SC22689P113	156-0687-01
SC22689P115	156-0308-03
SC22689P116	156-0860-02
SC22689L118/P118	156-1214-01
SC22689L124	156-0368-01
SC22689L124	156-0368-03
SC22689L125	156-0316-04
SC22689P125	156-0316-03
SC22689P126	156-0369-02
SC22689P126	156-0369-02
SC22689P130	156-1247-01
SC22689P131	156-0230-02
SC22689P133	156-0520-01
SC22689P135	156-0688-01
SC22689P136	156-0641-01
SC22689L138	156-0642-01
SC22689P141	156-0638-01
SC22689P158	156-0746-01
SC22689P160	156-0771-01
SC22689P164	156-0640-02
SC22689P165	156-1022-01

VENDOR NUMBER	PART NUMBER
SC22689P166	156-1023-01
SC22689P172	156-0758-01
SC22689P173	156-0632-02
SC22689P174	156-0637-01
SC22689L174	156-0760-01
SC22689L176	156-0633-01
SC22689L180	156-1374-00
SC22689L186	156-0743-01
SC22689P188	156-0543-01
SC22689P189	156-0542-01
SC22689P197	156-1021-01
SC22689P210	156-1019-01
SC22689P211	156-0757-01
SC22689P212	156-0848-01
SC22689P/L231	156-0880-02
SC22690L145	156-0847-00
SC22690L145	156-0847-01
SC22690L147	156-1035-00
SC22695P048	156-0266-01
SC22695P061	156-0624-01
SC22967L	156-0377-00
SL23300	156-0285-00
SL23750	156-0077-00
SL23898	156-0274-00
SL23900	156-0275-00
D2417HL-3	156-1613-00
25LS125PCB2/DCB2	156-1273-01
MTC2517-3	156-0393-00
AM25LS175J/PC	156-0392-01
AM25LS175PC/DC	156-0392-01
AMD25S191ADC	156-1675-00
SL25698	156-0067-09
AM26LS31OCB	156-1681-00
SN26L32N3	156-1315-00
2650A-1-I	156-0986-00
2650A-1-I	156-0986-02
2661-2I	156-1460-00
26L832N3/J4	156-1315-00
D2716-1	156-1417-00
AMD27S291DC	156-1672-00
AMD27191DC	156-1687-00
D2732A-3	156-1598-00
27L508	156-0305-01
AM27519	156-1814-00
D2764-3	156-1603-00
D2764-4	156-1630-00
D2816-3	156-0602-00
D2817-4	156-1735-00
SL28885	156-1283-00
SN29000N	156-0184-00
HA2-911-5	156-0132-00
AM29703PC	156-0599-00
AM29721PCB2/DCB2	156-1357-00
29821	156-1702-00
AM29824	156-1736-00
AM29827	156-1840-00
SCM30111LK	156-0657-02
SL30738	156-0363-00
SL30738	156-0363-01
SCM30121L	156-0761-00
AY-3-1015	156-0361-03
HS3120C-2	156-1811-00
R032513	156-0147-00
RO-3-2513	156-0882-00
EA3305-7	156-0211-00
EA3310-7	156-0212-00
RO-3-2513	156-0423-00
EA3310-7	156-0213-00
34001BDC	156-0349-01
F34011PC	156-0628-00
LM340T-12	156-0285-00
LM340T-12	156-0285-02
LM340T-15	156-0312-00
LM340T-15	156-0988-00
34024BDC	156-0523-00
LM340T-24	156-0926-00

VENDOR NUMBER	PART NUMBER
3X4025DC	156-0575-02
34035DC	156-0580-00
34049BDC	156-0494-00
34051BD	156-0513-00
34052BD	156-0514-00
LM341P-15.0TB	156-1262-00
LM345-5.2K	156-1348-00
34702	156-0850-01
SL34829	156-0402-00
SL34829/A+	156-0402-02
34925DC	156-0575-02
EA3503-7	156-0214-00
35392C	156-1484-00
FS35392	156-0964-00
P/D3604L-6	156-0971-00
D3624-4	156-0903-00
D3624-4	156-0903-03
HD3-6402	156-1310-00
SCM37202P/L	156-0676-01
SCM37226P/L	156-0978-00
SCM37227P/L	156-0979-00
SCM37228P/L	156-0980-00
SCM37229P/L	156-0981-00
SN38624J	156-0331-02
MK3880J-4	156-0983-00
MK3882N/P-4MKX	156-1620-00
TC40H002	156-1831-00
TC40H011P	156-1830-00
P4002-2	156-0797-00
TC40H032P	156-1829-00
AD40060	156-0317-00
TC40H074P	156-1828-00
40097DCQR	156-0649-02
F40098BCD	156-1341-00
CD40115D	156-1319-00
TC40H138P	156-1827-00
TC40H139P	156-1826-00
TC40H153	156-1825-00
TCH157P	156-1824-00
TC40H175P	156-1823-00
40193BDC	156-0627-02
AD40227	156-1249-00
TC40H259	156-1822-00
MK4027P-2	156-1112-00
MK4027J-3	156-1027-00
MK4027J-3	156-1027-01
MK4027J-3	156-1027-02
MK4027	156-0972-00
MK4027-4	156-0972-01
MK4027-4	156-0972-02
TC40H365P	156-1821-00
TC40H367P	156-1820-00
TC40H368P	156-1819-00
AD40374	156-1322-00
TC40H393P	156-1818-00
41042	156-1174-00
AD41055	156-1259-00
C41087	156-1239-00
411-12BINI	156-0415-00
411-12BINI	156-0415-01
MK4116-J2	156-1353-00
4116-3J/3D	156-0968-00
MK4116J-3	156-0968-00
MK4116P 3	156-0968-01
4118-1	156-1576-00
MK4118A-1P/J	156-1575-00
MK4118AP-2J	156-1383-00
MK4118AN-4	156-1382-02
MK4118A-4P/J	156-1382-01
MK4118AP-4	156-1382-00
AD41127	156-1457-00
S42168	156-1330-00
AD41201	156-1623-00
EA42267A-SG	156-0296-00
EA42303SG	156-0711-00

VENDOR NUMBER	PART NUMBER
SL42367	156-1223-00
HM4334P-3	156-1786-00
EA43356	156-1158-00
EA43357	156-1157-00
SCM44600P	156-0764-00
SCM44601L	156-0777-00
SCM44602P/L	156-0778-00
SCM44603P/L	156-0779-00
SCM44847P/L	156-1067-00
SCM44848P/L	156-1068-00
SCM44849P/L	156-1069-00
SCM44850P/L	156-1070-00
SCM44851P/L	156-1071-00
SCM44852P/L	156-1072-00
SCM44853P/L	156-1073-00
SCM44854P/L	156-1074-00
SCM44855P/L	156-1075-00
SCM44856P/L	156-1076-00
SCM44857P/L	156-1077-00
SCM44858P/L	156-1078-00
SCM44859P/L	156-1079-00
SCM44860P/L	156-1102-00
SCM44861P/L	156-1103-00
SCM44862P/L	156-1104-00
SCM44863P/L	156-1105-00
SCM44871C	156-1128-00
SCM44872L	156-1129-00
46252	156-1583-00
HD46850P/C	156-0658-00
MK4801AP/J4	156-1382-00
MK4801AN-4	156-1382-02
HM4816A-4/DG16B	156-1552-00
HM4816AP-7	156-1798-00
HM4864-3	156-1626-00
AD50018	156-0958-00
Z50249	156-0415-00
AY-5-1013	156-0361-00
AY-5-1013	156-0361-01
AY-5-1013	156-0361-02
51079	156-1240-00
51079	156-1420-00
C51268	156-1175-00
52S046	156-0940-00
AY-5-2376	156-0168-00
AY-5-2376	156-1541-00
SN54100	156-0191-00
M5G1400P	156-1566-00
SNC5411J	156-0828-00
SNC54121J	156-0829-00
SNC54122J	156-0830-00
54123DM	156-0603-00
54123J	156-0603-01
S54123F	156-0603-00
SN54123J	156-0603-00
SN54132J	156-0831-00
SNC54145J	156-0832-00
SNC54150J	156-0833-00
SNC54151J	156-0834-00
SNC54154J	156-0835-00
SNC54164	156-0836-00
SNC54175J	156-0837-00
SNC54177J	156-0838-00
SNC54180J	156-0839-00
SNC54193J	156-0840-00
SNC54197J	156-0841-00
M54533	156-1837-00
A-5-S7130	156-1028-00
SL57898	156-0118-00
MM58167AN/D	156-1601-00
6116P-3	156-1594-00
HM6116P-4	156-1632-00
HM6147G-3	156-1613-00
SC62438L	156-0705-00
SCM62462L	156-0657-00
SC62473	156-0765-00

THIS INDEX IS ARRANGED IN NUMERICAL ORDER, DISREGARDING LETTERS WHICH APPEAR IN SOME VENDOR NUMBERS.

VENDOR NUMBER TO TEK PART NUMBER INDEX (CONT)

INTEGRATED CIRCUITS

VENDOR NUMBER	PART NUMBER
SC62528L660	156-0287-00
SC62528L692	156-0307-01
SC62821LK	156-0369-01
6301-1J	156-1453-00
MMI6306-1J	156-0859-00
63S141J/D	156-1628-00
6349-1J	156-1392-00
SC63501F	156-1650-00
6353-1J	156-1213-00
64S021	156-1310-01
64S021	156-1310-02
6514-5	156-1359-01
SC65838	156-1066-00
6605AL-2	156-0635-01
6605AL-2	156-0635-02
MCM6605AL-2	156-0635-00
MCM66714C	156-1208-00
66750	156-0950-02
MCM66750	156-0950-00
MCM66750PDS/LDS	156-0950-02
SC67013LK	156-0426-03
67110D	156-0949-00
SC67127P	156-1342-01
SC67608P	156-0678-01
SC67702L	156-1013-00
MCM68000L6	156-1445-01
MC68000L8	156-1445-00
MC68000L10	156-1445-02
SL68104	156-0910-00
MC68121L	156-1660-00
68201PC/DC	156-0427-00
S68201P/E	156-0427-00
MC68201S	156-0428-00
MCM68308	156-0892-00
MCM68308	156-0764-00
MCM68316E/L or P	156-1067-00
MCM68316E/L or P	156-1068-00
MCM68316E/L or P	156-1069-00
MCM68316E/L or P	156-1070-00
MCM68316E/L or P	156-1071-00
MCM68316E/L or P	156-1072-00
MCM68316E/L or P	156-1073-00
MCM68316E/L or P	156-1074-00
MCM68316E/L or P	156-1075-00
MCM68316E/L or P	156-1076-00
MCM68316E/L or P	156-1077-00
MCM68316E/L or P	156-1078-00
MCM68316E/L or P	156-1079-00
MCM68316E/L or P	156-1102-00
MCM68316E/L or P	156-1103-00
MCM68316E/L or P	156-1104-00
MCM68316E/L or P	156-1105-00
MCM68316E/L	156-1106-00
MCM68316E/L	156-1128-00
MCM68316E/L	156-1129-00
MCM68316E/L	156-1130-00
MCM68316E/L	156-1131-00
MCM68316E/P	156-1107-00
68488L	156-1246-00
MC68701L	156-1579-00
MCM68764-C35	156-1686-00
MCM68764C/L	156-1559-00
TMSB73001LR	156-0055-00
TMSB73001LR	156-0055-01
TMS7C3003LR	156-0051-00
SC73198L	156-0495-02
AM73L422DC	156-1293-00
SN74S09N3	156-1286-00
SN74S09J4	156-1286-00
SN7490ANP3/JP4	156-0395-01
N74LS96NB/FB	156-0389-02
SN74LS96NP3/JP4	156-0389-02
74100	156-0193-01
N74100N	156-0193-00
SN74100N	156-0193-00

VENDOR NUMBER	PART NUMBER
SN74100NP3/JP4	156-0193-02
74102	156-0100-02
N74H102A	156-0100-00
SN74H102N	156-0100-00
DM74104N	156-0184-00
N74104A	156-0184-00
DM74H106N	156-0188-00
SN74H106N	156-0188-00
74C107	156-0680-01
MM74C107J	156-0680-00
MM74C107JA+	156-0680-02
DM74107NA+/JA+	156-1083-00
N74107NB/FB	156-1083-00
SN74107NP3/JP4	156-1083-00
SN74LS107NP3/JP4	156-0629-01
N74109B	156-1015-00
SN74109N	156-1015-00
74S109	156-1061-01
74S109PC/DC	156-1061-00
74S109PCQR/DCQR	156-1061-02
74LS109N/F	156-1059-00
DM74LS109NA+/JA+	156-1059-01
74LS109PC/DC	156-1059-00
74LS109PCQR/DCQR	156-1059-01
HD74LS109P	156-1059-01
N74LS109N/J	156-1059-00
SN74LS109AN/J	156-1059-00
SN74LS109ANDS/JDS	156-1059-01
SN74LS109ANP3/JP4	156-1059-01
74ALS109	156-1755-00
74111	156-0174-01
74111J	156-0593-01
DM74111N/J	156-0174-00
N74111A	156-0174-00
SN74111N/J	156-0174-00
SN74111J	156-0593-00
74S112	156-0118-01
DM74S112N/J	156-0118-00
N74S112N	156-0118-00
N74S112N	156-0118-03
SN74S112N	156-0118-02
SN74S112N	156-0118-03
DM74LS112N	156-1258-00
DM74LS112NA+/JA+	156-1258-01
SN74LS112N	156-1258-00
SN74LS112NDS/JDS	156-1258-01
SN74LS112NP3/JP4	156-1258-01
74ALS112	156-1758-00
DM74S113NA+/JA+	156-1629-00
N74S113NB/FB	156-1629-00
SN74S113NP3/JP4	156-1629-00
74LS113PC/DC	156-0567-00
74LS113N	156-0567-01
74LS113PCQR/DCQR	156-0567-02
DM74LS113N/J	156-0567-00
DM74LS113NA+/JA+	156-0567-02
N74LS113N/F	156-0567-00
N74LS113NB/FB	156-0567-02
SN74LS113N/J	156-0567-00
SN74LS113NDS/JDS	156-0567-02
SN74LS113NP3/JP4	156-0567-02
SN74116N	156-0521-00
SN74116NP3/JP4	156-0521-02
74121	156-0072-01
74121	156-0562-01
74121PC/DC	156-0072-00
74121PCQR/DCQR	156-0072-02
DM74121N/J	156-0072-00
N74121N/F	156-0072-00
N74121NB/FB	156-0072-02
SN74121J	156-0562-00
SN74121N/J	156-0072-00
SN74121N	156-0072-02
74122	156-0143-01
74122J	156-0594-01

VENDOR NUMBER	PART NUMBER
74122J	156-0595-01
74122PC/DC	156-0143-00
74122PCQR/DCQR	156-0143-02
N74122N	156-0143-00
SN74122J	156-0594-00
SN74122N/J	156-0143-00
SN74122N/J	156-0143-02
74S122	156-1199-00
74123	156-0172-01
74123DC	156-0595-00
74123PC/DC	156-0172-00
74123PCQR/DCQR	156-0172-02
DM74123NA+/JA+	156-0172-02
N74123N/F	156-0172-00
N74123NB/FB	156-0172-02
N74123F	156-0595-00
μPB74123C	156-0172-00
SN74123J	156-0595-00
SN74123N/J	156-0172-00
SN74123NP3/JP4	156-0172-02
SN74123PCB2/DCB2	156-0172-02
74LS123NDS/JDS	156-1600-00
HD74LS123	156-1600-00
SN74LS123NP3/JP4	156-1600-00
74LS124	156-0861-00
SN74LS124N	156-0861-00
SN74LS124NP3	156-0861-01
74LS125PC/DC	156-1373-00
DM74LS125N/J	156-1373-00
DM74LS125NA+/JA+	156-1373-01
SN74LS125AN/J	156-1373-00
SN74LS125N3/J4	156-1373-01
74LS126PCQR/DCQR	156-1619-00
DM74LS126NA+/JA+	156-1619-00
N74LS126NB/FB	156-1619-00
SN74LS126NDS/JDS	156-1619-00
74128	156-0451-01
47128	156-0451-03
74128J	156-0613-01
N74128NB/FB	156-0451-02
N74128N/F	156-0451-00
SN74128N/J	156-0451-00
SN74128J	156-0613-00
SN74128NP3/JP4	156-0451-02
74132	156-0371-01
74132PC/DC	156-0371-00
74132PCQR/DCQR	156-0371-02
DM74132	156-0371-00
DM74132N3/J4	156-0371-02
N74132N/J	156-0371-00
N74132NB/FB	156-0371-02
N74132NA+/JA+	156-0371-02
SN74132N/J	156-0371-00
SN74132NP3/JP4	156-0371-02
74S132PC/DC	156-0413-00
74132DCQR/PCQR	156-0413-02
N74S132A	156-0413-00
N74S132NB/FB	156-0413-02
SN74S132N/J	156-0413-00
SN74S132N	156-0413-01
SN74S132NP3/JP4	156-0413-02
74LS132	156-0721-01
74LS132PC	156-0721-00
74LS132PCQR/DCQR	156-0721-02
74LS132	156-0721-03
74LS132	156-0721-04
DM74LS132N	156-0721-00
DM74LS132N	156-0721-02
N74LS132N	156-0721-00
N74LS132NB/FB	156-0721-02
SN74LS132N	156-0721-00
SN74LS132NDS/JDS	156-0721-02
SN74LS132N3/J4	156-0721-02
74S133	156-0472-01
74S133PC	156-0472-00

VENDOR NUMBER	PART NUMBER
74S133DCQR/PCQR	156-0472-03
DM74S133N	156-0472-00
DM74S133NA+/JA+	156-0472-03
N74S133N	156-0472-00
N74S133NB/FB	156-0472-03
SN74S133N	156-0472-00
SN74S133NP3/JP4	156-0472-03
74LS133PC/DC	156-0866-00
74LS133PCQR/DCQR	156-0866-02
74LS133	156-0866-01
SN74LS133N/J	156-0866-00
SN74LS133NDS/JDS	156-0866-02
74ALS133	156-1759-00
74S134DCQR	156-1573-00
DM74S134NA+/JA+	156-1573-00
N74S134FB	156-1573-00
SN74S134NP3/JP4	156-1573-00
74LS136PC	156-0990-00
74LS136PCQR/DCQR	156-0990-01
SN74LS136N	156-0990-00
SN74LS136NP3/JP4	156-0990-01
74F138	156-1727-00
74S138PC	156-0694-00
74S138DCQR	156-0694-02
74S138	156-0694-01
DM74S138N	156-0694-00
DM74S138JA+	156-0694-02
N74S138N	156-0694-00
N74S138FB	156-0694-02
SN74S138N	156-0694-00
SN74138JB	156-0694-02
SN74S138J/P4	156-0694-02
SN74S138N/J	156-1194-00
74LS138	156-0469-01
74LS138PC	156-0469-00
DM74LS138N	156-0469-00
N74LS138N	156-0469-00
N74LS138NB/FB	156-0469-02
SN74LS138N	156-0469-00
74LS138PCQR/DCQR	156-0469-02
SN74LS138NP3/JP4	156-0469-02
SN74LS138NDS/JDS	156-0469-02
SN74LS138NB2/JB2	156-0469-02
74F139	156-1726-00
74S139PC	156-0693-00
74S139PCQR/DCQR	156-0693-02
DM74S139N	156-0693-00
DM74S139NA+/JA+	156-0693-02
74S139	156-0693-01
N74S139N	156-0693-00
N74S139NB/FB	156-0693-02
N74S139NA+/JA+	156-0693-02
SN74S139N	156-0693-00
SN74S139N3	156-0640-01
SN74S139B2	156-0693-02
SN74S139NP3/JP4	156-0693-02
74LS139PC	156-0541-00
74LS139PCQR/DCQR	156-0541-02
74LS139	156-0541-01
DM74LS139N	156-0541-00
N74LS139N	156-0541-00
N74LS139NB/FB	156-0541-02
SN74LS139N	156-0541-00
SN74LS139NDS/JDS	156-0541-02
SN74LS139NP3/JP4	156-0541-02
74S140PC/DC	156-0419-00
74S140DCQR/PCQR	156-0419-02
DM74S140N/J	156-0419-00
DM74S140NA+/JA+	156-0419-02
N74S140N/F	156-0419-00
N74S140NB/FB	156-0419-02
SN74S140N/J	156-0419-00
SN74S140N	156-0419-01
SN74S140NP3/JP4	156-0419-02
74141PC	156-0080-00

VENDOR NUMBER TO TEK PART NUMBER INDEX (CONT)
INTEGRATED CIRCUITS

VENDOR NUMBER	PART NUMBER
DM74141N	156-0080-00
ITT74141N	156-0080-00
SN74141N	156-0080-00
74145	156-0111-01
74145J	156-0598-01
74145PC	156-0111-00
74145PCQR/DCQR	156-0111-02
DM74145NB/FB	156-0111-02
N74145B	156-0111-00
N74145NB/FB	156-0111-02
SN74145N	156-0111-00
SN74145J	156-0598-01
SN74145NP3/JP4	156-0111-02
SN74LDS145NDS	156-1235-00
SN74LS145ND/LD	156-1235-00
SN74LS145N4/J4	156-1235-00
74147	156-0347-01
DM74147NA+/JA+	156-0347-02
SN74147N/J	156-0347-00
SN74147NP3/JP3	156-0347-02
SN74LS147N	156-1177-00
SN74LS147NP3	156-1177-01
74148PC	156-0219-00
N74148B	156-0219-00
SN74148N	156-0219-00
SN74148N	156-0219-02
74LS148NP3/JP4	156-1252-01
SN74LS148NP3	156-1252-00
74150	156-0299-01
74150J	156-0597-01
74150PC	156-0299-00
74150PCQR/DCQR	156-0299-02
DM74150N	156-0299-00
DM74150NA+/JA+	156-0299-02
ITT74150N	156-0299-00
N74150N	156-0299-00
N74150NP3/JP4	156-0299-02
SN74150P	156-0139-00
SN74150N	156-0299-00
SN74150J	156-0597-00
SN74150NP3/JP4	156-0299-02
74151	156-0075-01
74151J	156-0563-01
74151APC/DC	156-0075-00
74151PCQR/DCQR	156-0075-02
DM74151AN/J	156-0075-00
DM74151NA+/JA+	156-0075-02
N74151B	156-0075-00
SN74151AN	156-0075-00
SN74151J	156-0563-00
74C151	156-0869-01
MM74C151N	156-0648-00
MM74C151J	156-0869-00
MM74C151JA+	156-0869-01
74S151	156-0324-01
74S151NB/FB	156-0324-03
74S151PC	156-0324-00
DM74S151N	156-0324-00
DM74S151NA+/JA+	156-0324-03
N74S151B	156-0324-00
N74S151DCQR/PCQR	156-0344-03
SN74S151N	156-0324-00
SN74S151NP3/JP4	156-0324-03
SN74S151NP/JB	156-0324-03
SN74S151N	156-0324-00
74LS151	156-0994-01
74LS151N/J	156-0994-00
74LS151PC/DC	156-0994-00
74LS151PCQR/DCQR	156-0994-01
HD74LS151P/C	156-0994-00
HD74LS151P/C	156-0994-02
SN74LS151N/J	156-0994-00
SN74LS151NP3/JP4	156-0994-02
74152	156-0934-01
74153	156-0098-01
74153PC	156-0604-01
74153PC/DC	156-0098-00
74153PCQR/DCQR	156-0098-02
DM74153N	156-0098-00
DM74153NA+/JA+	156-0098-02
N74153B	156-0098-00
N74153NB/FB	156-0098-02
SN74153J	156-0604-00
SN74153N	156-0098-00
SN74153NP3/JP4	156-0098-02
74F153PCQR/DCQR	156-1662-00
74S153DCQR	156-0325-02
74S153PC/DC	156-0325-00
DM74S153N/J	156-0325-00
N74S153FB	156-0325-02
N74S153N/J	156-0325-00
SN74S153JB	156-0325-02
SN74S153JP3	156-0325-02
SN74S153N	156-0325-01
SN74S153N/J	156-0325-00
74LS153	156-0798-01
74LS153PC/DC	156-0798-00
74LS153PCQR/DCQR	156-0798-02
N74LS153N/F	156-0798-00
N74LS153PC	156-0798-02
SN74LS153N/J	156-0798-00
SN74LS153NP3/JP4	156-0798-02
SN74LS153NDS/JDS	156-0798-02
SN74LS153NB/JB	156-0798-02
74154	156-0078-01
74154J	156-0564-01
74154PC	156-0078-01
74154PCQR/DCQR	156-0078-02
DM74154N	156-0078-02
N74154N	156-0078-00
N74154NB/FB	156-0078-02
SN74154N	156-0078-00
SN74154J	156-0564-00
SN74154N	156-0138-00
SN74154NP3/JP4	156-0138-02
MM74C154J	156-0650-00
74L154	156-1201-01
DM74L154N	156-1201-00
SN74L154N	156-1201-00
74LS154	156-1026-01
74LS154	156-1026-03
DM74LS154NA+	156-1026-02
DM74LS154N	156-1026-00
N74LS154N	156-1026-00
SN74LS154NP3	156-1026-02
74155	156-0110-01
74155	156-0110-02
74155PC/DC	156-0110-00
74155PCQR/DCQR	156-0110-02
DM74155N/J	156-0110-00
DM74155NA+/JA+	156-0110-02
N74155NB/FB	156-0110-02
N74155N/F	156-0110-00
SN74155N/J	156-0110-00
SN74155NP3/JP4	156-0110-02
74LS155	156-0390-01
74LS155PC/DC	156-0390-00
74LS155PCQR/DCQR	156-0390-02
DM74LS155N/J	156-0390-00
DM74LS155NA+/JA+	156-0390-02
N74LS155NB/FB	156-0390-02
N74LS155N/F	156-0390-00
SN74LS155N/J	156-0390-00
SN74LS155NP3/JP4	156-0390-02
SN74LS155NDS/JDS	156-0390-02
74156	156-0141-01
74156PC/DC	156-0141-00
74156PCQR/DCQR	156-0140-02
DM74156N/J	156-0141-00
DM74156NA+/JA+	156-0141-02
N74156N/F	156-0141-00
N74156NB/FB	156-0141-02
SN74156N/J	156-0141-00
SN74156NP3/JP4	156-0141-02
74LS156PC/DC	156-1432-00
74LS156PCQR/DCQR	156-1432-02
N74LS156N/F	156-1432-00
N74LS156NB/FB	156-1432-02
SN74LS156N/J	156-1432-00
SN74LS156NDS/JDS	156-1432-02
SN74LS156NP3/JP4	156-1432-02
74157	156-0125-01
74157PC	156-0125-00
74157PCQR/DCQR	156-0125-02
DM74157N	156-0125-00
DM74157NA+/JA+	156-0125-02
N74157B	156-0125-00
N74157NB/FB	156-0125-02
SN74157N	156-0125-00
SN74157NP3/JP4	156-0125-02
74C157	156-0547-01
MM74C157J	156-0547-00
MM74C157JA+	156-0547-02
MM74C157JA+	156-0547-03
74S157	156-1064-01
N74S157FB	156-1064-02
N74S157B/F	156-1064-00
SN74S157N/J	156-1064-00
SN74S157JP4	156-1064-02
SN74S157JB	156-1064-02
74LS157	156-0530-01
74LS157PC	156-0530-00
74LS157PCQR/DCQR	156-0530-02
DM74LS157N	156-0530-00
SN74LS157N	156-0530-00
SN74LS157NP3/JP4	156-0530-02
SN74LS157NDS/JDS	156-0530-02
SN74LS157NB2/JB2	156-0530-02
N74S158N/F	156-1351-00
N74S158NB/FB	156-1351-01
SN74S158N/J	156-1351-00
SN74S158NP3/JP4	156-1351-01
SN74S158PC/DC	156-1351-00
74LS158PC/DC	156-1395-00
74LS158PCQR/DCQR	156-1395-01
DM74LS158N/J	156-1395-00
SN74159	156-0929-00
74160N	156-0261-00
SN74160N/J	156-1414-00
74HC160	156-1750-00
74161	156-0117-01
74161J	156-0605-01
74161PCQR/DCQR	156-0117-02
74161PC/DC	156-0117-00
ITT74161N	156-0117-00
N74161N/F	156-0117-00
N74161NB/FB	156-0117-02
SN74161NP3/JP4	156-0117-02
SN74161N/J	156-1415-00
SN74161J	156-0605-00
SN74161N/J	156-0117-00
AM74S161JTB	156-1044-01
SN74S161J	156-1044-00
74HC161	156-1762-00
74LS161	156-0844-01
HD74LS161P/C	156-0844-02
SN74LS161N	156-0844-00
SN74LS161ANP3/JP4	156-0844-02
SN74LS161AND/JD	156-0844-02
SN74LS161ANP2/JB2	156-0844-02
SN74LS161AN	156-0844-00
N74LS162AN/F	156-0788-00
N74LS162N/J	156-0788-00
N74S162NB/FB	156-0788-01
DM74LS162NA+/JA+	156-0788-01
SN74LS162AN/J	156-0788-00
SN74LS162NP3/JP4	156-0788-01
SN74LS162NDS/JDS	156-0788-01
SN74LS162NB2/JB2	156-0788-01
74163	156-0248-01
74163PC	156-0248-00
74163PCQR/DCQR	156-0248-02
DM74163AN	156-0248-00
DM74163ANA+/JA+	156-0248-02
ITT74163N	156-0248-00
N74163N	156-0248-00
N74163NB/FB	156-0248-02
SN74163N	156-0248-00
SN74163NP3/JP4	156-0248-02
SN74S163J	156-1198-00
SN74S163JP4	156-1198-01
74LS163N/F	156-0784-00
74LS163	156-0784-01
DM74LS163ANA+	156-0784-02
SN74LS163N	156-0784-00
SN74LS163AN/J	156-0784-00
SN74LS163ANP3	156-0784-02
74164	156-0610-01
74164	156-0131-01
74164PC	156-0131-00
74164PCQR/DCQR	156-0131-02
DM74164N	156-0131-00
DM74164NA+/JA+	156-0131-02
ITT74164N	156-0131-00
N74164A	156-0131-00
SN74164J	156-0610-00
SN74164N	156-0131-00
SN74164NP3/JP4	156-0131-02
74C164	156-0572-01
MM74C164J	156-0572-00
MM74C164JA+	156-0572-02
74LS164PC/DC	156-0651-00
74LS164	156-0651-01
74LS164PCQR/DCQR	156-0651-02
DM74LS164N/J	156-0651-00
N74LS164AN/F	156-0651-00
N74LS164NB/FB	156-0651-02
SN74LS164N/J	156-0651-00
SN74LS164NDS/JDS	156-0651-02
SN74LS164NP3/JP4	156-0651-02
74165	156-0146-01
74165PC	156-0146-00
74165PCQR/DCQR	156-0146-02
DM74165N	156-0146-00
DM74165NA+/JA+	156-0146-02
N74165N	156-0146-00
N74165NB/FB	156-0146-02
SN74165N	156-0146-00
SN74164NP3/JP4	156-0146-02
74C165	156-0626-01
74C165JA+	156-0626-01
MM74C165J	156-0625-00
74LS165	156-0789-00
74LS165	156-0789-01
SN74LS165NDS/JDS	156-0789-02
SN74LS156NP3/JP4	156-0789-02
74166PC	156-0301-00
74166PC/DC	156-0301-02
DM74166N	156-0301-00
DM74166NA+/JA+	156-0301-02
N74166N	156-0301-00
N74166NB/FB	156-0301-02
SN74166N	156-0301-00
SN74166NP3/JP4	156-0301-02
74LS168PC/DC	156-1371-00
DM74LS168N/J	156-1371-00
SN74LS168N/J	156-1371-00
SN74LS166NP3/JP4	156-1313-00
SN74LS166NDS/JDS	156-1313-00

THIS INDEX IS ARRANGED IN NUMERICAL ORDER, DISREGARDING LETTERS WHICH APPEAR IN SOME VENDOR NUMBERS.

VENDOR NUMBER TO TEK PART NUMBER INDEX (CONT)

INTEGRATED CIRCUITS

4

VENDOR NUMBER	PART NUMBER
SN74LS168ANDS/JDS	156-1371-00
74S169	156-0765-01
74S169	156-0765-03
SN74S169J	156-0765-00
SN74S169N3	156-0765-04
SN74SL69JP4	156-0765-05
DM74LS169N	156-0957-00
DM74LS169NA+/JA+	156-0957-01
SN74LS169N	156-0957-00
SN74LS169NDS/JDS	156-0957-01
SN74LS169NB2/JB2	156-0957-01
74LS170PC	156-0732-00
74LS170	156-0732-01
DM74LS170N	156-0732-00
N74LS170B	156-0732-00
SN74LS170N	156-0732-00
74C173	156-0574-01
MM74C173J	156-0574-00
MM74C173JA+	156-0574-02
74LS173	156-0951-01
DM74LS173N/J	156-0951-00
DM74LS173NA+/JA+	156-0951-02
SN74LS173N/J	156-0951-00
SN74LS173N3/J4	156-0951-02
SN74LS173NDS/JDS	156-0951-02
74174	156-0222-01
74174PC	156-0222-00
74174PCQR/DCQR	156-0222-02
DM74174N	156-0222-00
DM74174NA+/JA+	156-0222-02
N74174B	156-0222-00
N74174NB/FB	156-0222-02
SN74174N	156-0222-00
SN74174NP3/JP4	156-0222-02
74C174	156-0682-01
MM74C174J	156-0682-00
MM74C174NA+/JA+	156-0682-02
74S174	156-0738-00
74S174	156-0738-01
74S174PC	156-0738-00
74S174JP4	156-0738-04
N74S174F	156-0738-02
N74S174F	156-0738-03
SN74S174N	156-0738-00
SN74S174J	156-0738-02
SN74S174J	156-0738-03
SN74S174JP4	156-0738-04
74LS174	156-0391-01
74LS174N/J	156-0391-02
74LS174PC/DC	156-0391-00
74LS174PCQR/DCQR	156-0391-02
DM74LS174N/J	156-0391-00
DM74LS174NA+/JA+	156-0391-02
N74LS174N/F	156-0391-00
N74LS174NB/FB	156-0391-02
SN74LS174NB/JB	156-0391-02
SN74LS174N/J	156-0391-00
SN74LS174NDS/JDS	156-0391-02
SN74LS174NP3/JP4	156-0391-02
74175	156-0221-01
74175PC	156-0221-00
74175PCQR/DCQR	156-0221-02
DM74175N	156-0221-00
DM74175NA+/JA+	156-0221-02
μPB74175C	156-0221-00
N74175N	156-0221-00
N74175NB/FB	156-0221-02
SN74175N	156-0221-00
SN74175J	156-0615-00
SN74175NP3/JP4	156-0221-02
MM74C175J	156-0931-00
MM74C175JA+	156-0931-01
74S175	156-0948-01
74S175DCQR	156-0948-02
SN74S175J	156-0948-00
SN74S175J4	156-0948-02
74LS175PC/DC	156-0392-00
74LS175	156-0392-02
74LS175PCQR/DCQR	156-0392-02
DM74LS175N/J	156-0392-00
DM74LS175NA+/JA+	156-0392-02
N74LS175N/F	156-0392-00
N74LS175NB/FB	156-0392-02
SN74LS175N/J	156-0392-00
SN74LS175NB/JB	156-0392-03
SN74LS175N/J	156-0392-00
SN74LS175NP3/JP4	156-0392-03
SN74LS175NDS/JDS	156-0392-03
74177J	156-0606-01
74177PC	156-0536-00
SN74177	156-0536-01
SN74177J	156-0606-00
SN74177N	156-0536-00
SN74177PCQR/DCQR	156-0536-02
74180J	156-0607-01
74180PC	156-0088-00
74180PCQR/DCQR	156-0088-02
DM74180N	156-0088-00
DM74180NA+/JA+	156-0088-02
N74180A	156-0088-00
N74180NB/FB	156-0088-02
SN74180J	156-0607-00
SN74180N	156-0088-00
SN74180NP3/JP4	156-0088-00
74181PCQR/DCQR	156-0351-01
DM74181N/A+	156-0351-01
DM74181N/J	156-0351-00
N74181N	156-0351-00
SN74181N/J	156-0351-00
SN74181NP3	156-0351-01
74S181PCQR/DCQR	156-1376-00
N74S181NB/FB	156-1376-00
SN74S181N/J	156-1196-00
SN74S181NDS/JDS	156-1376-00
74S182N/D	156-0692-00
74S182	156-0692-01
74S182	156-0692-02
74S182N/D	156-0692-02
74S182	156-1048-01
74S182	156-1048-02
DM74S182N	156-0692-00
N74S182N/F	156-0692-00
N74S182F	156-1048-00
N74S182NB/FB	156-0692-02
SN74S182N/J	156-0692-00
SN74S182NP3/JP4	156-0692-02
SN74S182J	156-1048-00
74H183N	156-0269-01
74H183PC/DC	156-0269-00
SN74H183N/J	156-0269-00
74184	156-0315-01
DM/SN74184	156-0315-00
SN74184N	156-0315-00
SN74184NP3/JP4	156-0315-02
74185	156-0345-00
74185	156-0345-01
DM74185AN	156-0345-00
DM74185NA+/JA+	156-0315-02
DM74185NA+/JA+	156-0345-02
SN74185AN	156-0345-00
SN74185NP3/JP4	156-0345-02
74S188CHJ/J	156-1109-00
SN74S189	156-1189-00
SN74S189J	156-1189-00
SN74S189J	156-1189-01
SN74S189J4	156-1189-01
DM74LS189	156-0599-00
DM74LS189JA+	156-0599-01
74190	156-0340-01
N74190N/J	156-0340-00
SN74190N/J	156-0340-00
SN74190NP3/JP4	156-0340-02
74LS190PC/DC	156-0569-00
DM74LS190N/J	156-0569-00
N74LS190N	156-0569-00
SN74LS190N/J	156-0569-00
SN74LS190NDS	156-0569-01
SN74LS190NP3	156-0569-01
74191	156-0175-01
74191DCQR/PCQR	156-0175-02
74191PC/DC	156-0175-00
DM74191N/J	156-0175-00
DM74191N/J	156-0175-02
N74191N	156-0175-00
SN74191N/J	156-0175-00
SN74191N/J	156-0175-02
74F191	156-1714-00
74LS191	156-0422-01
74LS191PC/DC	156-0422-00
74LS191PCQR/DCQR	156-0422-02
DM74LS191N/J	156-0422-00
N74LS191N/F	156-0422-00
N74LS191NB/FB	156-0422-02
SN74LS191N/J	156-0422-00
SN74LS191NB	156-0422-02
SN74LS191NDS/JDS	156-0422-02
SN74LS191NP3/JP4	156-0422-02
74192	156-0127-01
74192PC/DC	156-0127-00
74192PCQR/DCQR	156-0127-02
N74192NB/FB	156-0127-02
N74192N/F	156-0127-00
SN74192N/J	156-0127-00
SN74192NP3/JP4	156-0127-02
74LL192	156-0245-01
SN74LL192N	156-0245-00
74LS192PC	156-0526-00
74LS192	156-0526-01
74LS192	156-0526-02
74LS192PCQR/DCQR	156-0526-02
DM74LS192N	156-0526-00
DM74LS192NA+/JA+	156-0526-02
N74LS192B	156-0526-00
N74LS192NB/FB	156-0526-02
SN74LS192N	156-0526-00
SN74LS192NP3/JP4	156-0526-02
SN74LS192PCB/DCB	156-0526-02
74193	156-0089-01
79193J	156-0565-01
74193PC	156-0089-00
74193PCQR/DCQR	156-0089-02
μPB74193C	156-0089-00
N74193N/F	156-0089-00
N74193NB/FB	156-0089-02
SN74193N/J	156-0089-00
SN74193NP3/JP4	156-0089-02
SN74193J	156-0565-00
MM74193J	156-0627-00
74C193	156-0627-01
MM74C193JA+	156-0627-02
SN74L193N	156-0489-00
74LS193	156-0412-01
74LS193DCQR/PCQR	156-0412-02
74LS193PC/DC	156-0412-00
DM74LS193N/J	156-0412-00
DM74LS193NA+/JA+	156-0412-02
N74LS193N/F	156-0412-00
N74LS193NB/FB	156-0412-02
SN74LS193N/J	156-0412-00
SN74LS193NDS/JDS	156-0412-02
SN74LS193NP3/JP4	156-0412-02
74194	156-0697-01
DM74194N	156-0697-00
N74194N	156-0697-00
SN74194N	156-0697-00
74S194DC	156-0744-03
74S194NJ	156-0744-00
74S194	156-0744-01
74S194	156-0744-02
74S194	156-0744-04
AM74S194J	156-0744-03
SN74S194J	156-0744-03
SN74S194N/J	156-0744-00
74F194PC/DC	156-0744-00
74LS194APC	156-0768-00
74LS194APCQR/DCQR	156-0768-01
SN74LS194AN	156-0768-00
SN74LS194ANP3/JP4	156-0768-01
74195	156-0367-01
74195PC/DC	156-0367-00
74195PCQR/DCQR	156-0367-02
DM74195N/J	156-0367-00
DM74195NA+/JA+	156-0367-02
N74195N/F	156-0367-00
N74195NB/FB	156-0367-02
74S195	156-0326-01
SN74195N/J	156-0367-00
SN74195NP3/JP4	156-0367-02
74S195PC/DC	156-0326-00
DM74S195N/J	156-0326-00
DM74S195NA+	156-0326-02
DM74S195JA+	156-0326-03
N74S195NB/FB	156-0326-02
N74S195N/F	156-0326-00
SN74S195N/J	156-0326-00
SN74S195NP3/JP4	156-0326-02
SN74S195NB/JB	156-0326-02
SN74S195JB	156-0326-03
SN74S195JP4	156-0326-03
74LS195	156-0376-00
74LS195APC/ADC	156-0376-00
74LS195PCQR/DCQR	156-0376-02
DM74LS195AN/AJ	156-0376-00
N74LS195ANB/FB	156-0376-02
SN74LS195AN/AJ	156-0376-00
SN74LS195NP3/JP4	156-0376-01
SN74LS195NPS/JPS	156-0376-01
SN74LS195NB2/JB2	156-0376-01
SN74196N/J	156-0097-00
SN74196NP3/JP4	156-0097-01
74S196	156-0883-01
74S196J	156-0883-00
DM74S196J	156-0883-00
DM74S196JA+	156-0883-02
DM74S196NA+/JA+	156-0482-01
SN74S196N/J	156-0482-00
74LS196PC	156-0727-00
74LS196PCQR/DCQR	156-0727-01
DM74LS196N	156-0727-00
N74LS196N	156-0727-00
N74LS196NB/FB	156-0727-01
N74LS196NB2/JB2	156-0727-01
SN74LS196N	156-0727-00
SN74LS196NDS/JDS	156-0727-01
SN74LS196NP3/JP4	156-0727-01
74197	156-0142-01
74197J	156-0596-01
74197PC	156-0142-00
74197PCQR/DCQR	156-0142-02
DM74197N	156-0142-00
DM74197NA+/JA+	156-0142-02
SN74197J	156-0596-00
SN74197N	156-0142-00
SN74197NP3/JP4	156-0142-00
SN74S197JP4	156-1183-00
74LS197PC	156-0629-00
74LS197PCQR/DCQR	156-0629-01
DM74LS197N	156-0629-00
DM74LS197NA+/JA+	156-0629-01
N74LS197A	156-0629-00
N74LS197NB/FB	156-0629-01
SN74LS197N	156-0629-00

VENDOR NUMBER TO TEK PART NUMBER INDEX (CONT)

INTEGRATED CIRCUITS

VENDOR NUMBER	PART NUMBER
SN74LS197NDS/JDS	156-0629-01
74221	156-0706-01
SN74221NP3/JP4	156-0706-02
SN74221	156-0706-00
MM74C221J/A+	156-0750-02
DM74LS221N/J	156-0733-00
74LS221	156-0733-01
SN74LS221N/J	156-0733-00
SN74LS221N/J	156-0733-03
SN74LS221N3/J4	156-0733-02
SN74LS221NDS/JDS	156-0733-02
74S225J	156-1524-00
74F240	156-1744-00
74S240J	156-1058-00
74S240JSCR	156-1058-01
AMD74S240JB	156-1058-01
SN74S240J	156-1058-00
SN74S240JP4	156-1058-01
74LS240PC/DC	156-0914-00
74LS240	156-0914-01
74SL240N/J	156-0914-03
74LS240PCQR/DCQR	156-0914-02
74LS240N/J	156-0914-00
74LS240N/J	156-0914-02
SN74LS240N/J	156-0914-02
N74LS240N/F	156-0914-00
N74LS240NB/FB	156-0914-02
SN74LS240N/J	156-0914-00
SN74LS240NDS/JDS	156-0914-02
SN74LS240NP3/JP4	156-0914-02
74ALS240	156-1753-00
74ALS240-1	156-1753-01
74F241	156-1745-00
74S241JSCR	156-1179-00
SN74S241N20	156-1179-00
SN74S241N/J	156-1179-00
SN74S241JP4	156-1179-01
SN74S241JB	156-1179-01
SN74LS241NDS/JDS	156-0955-02
74LS241PC/DC	156-0955-00
74LS241	156-0955-01
74LS241N/J	156-0955-00
74LS241PCQR/DCQR	156-0955-02
DM74LS241NB/JB	156-0955-02
N74LS241N/F	156-0955-00
N74LS241NB/FB	156-0955-02
SN74LS241NP3/JP4	156-0955-02
SN74LS241N/J	156-0955-02
74LS242	156-1025-01
AMD74LS242NB/JB	156-1025-02
SN74LS242N/J	156-1025-00
SN74LS242NDS/JDS	156-1025-02
SN74LS242NP3/JP4	156-1025-02
SN74LS242NB2/JB2	156-1025-02
74LS243	156-0928-01
AM74LS243N/J	156-0928-00
SN74LS243NDS/JDS	156-0928-02
SN74LS243NP3/JP4	156-0928-02
SN74LS243N/J	156-0928-00
SN74LS243NB/JB	156-0928-02
74LS244	156-0956-01
74LS244	156-0956-03
N74LS244N/F	156-0956-00
N74LS244N/F	156-0956-04
N74LS244NB/FB	156-0956-02
N74LS244NB/JB	156-0956-04
SN74LS244NDS/JDS	156-0956-02
SN74LS244NP3/JP4	156-0956-02
SN74LS244NB/JB	156-0956-02
SN74LS244N/J	156-0956-00
SN74LS244N/J	156-0956-02
74F245PCQR/DCQR	156-1725-00
74LS245	156-1111-01
SN74LS245N/J	156-1111-00
SN74LS245JDS	156-1111-02
SN74LS245JP3	156-1111-02
SN74LS245J	156-1111-02
74ALS245	156-1748-00
74ASL245-1	156-1748-01

VENDOR NUMBER	PART NUMBER
DM74251N/J	156-0397-00
DM74251NA+/JA+	156-0397-02
SN74251N/J	156-0397-00
SN74251NP3/JP4	156-0397-02
74F251	156-1746-00
AM74S251N	156-0701-00
DM74S251N	156-0701-00
N74S251B	156-0701-00
SN74S251N	156-0701-00
74LS251	156-0470-01
74LS251N/J	156-0470-00
74LS251PC/DC	156-0470-00
74LS251PCQR/DCQR	156-0470-02
DM74LS251N/J	156-0470-00
SN74LS251N/J	156-0470-00
N74LS251N	156-0470-00
SN74LS251NP3/JP4	156-0470-02
SN74LS251NDS/JDS	156-0470-02
SN74LS251NB2/JB2	156-0470-02
74LS253	156-0471-01
74LS253PC	156-0471-00
74LS253PCQR/DCQR	156-0471-02
DM74LS253N	156-0471-00
DM74LS253NA+/JA+	156-0471-02
N74LS253N	156-0471-00
N74LS253NB/FB	156-0471-02
SN74LS253N	156-0471-00
SN74LS253NP3/JP4	156-0471-02
SN74LS253NDS/JDS	156-0471-02
SN74LS253NB2/JB2	156-0471-02
74S257	156-0522-01
74S257PC	156-0522-00
74S257DCQR/PCQR	156-0522-02
DM74S257N	156-0522-00
DM74S257NA+/JA+	156-0522-02
N74S257B	156-0522-00
N74S257NB/FB	156-0522-02
SN74S257N	156-0522-00
SN74S257NP3/JP4	156-0522-02
SN74S257NB/JB	156-0522-02
74LS257	156-0529-01
74LS257PC/DC	156-0529-00
74LS257PCQR/DCQR	156-0529-02
DM74LS257N/J	156-0529-00
N74LS257N/J	156-0529-00
SN74LS257N/F	156-0529-00
SN74LS257NDS/JDS	156-0529-02
SN74LS257NP3/JP4	156-0529-02
SN74LS257NB2/JB2	156-0529-02
74S258DCQR	156-1547-00
74S258FB	156-1547-00
SN74S258JP4	156-1547-00
DM74LS258NA+/JA+	156-1229-01
SN74LS258N/J	156-1229-00
74LS258PCQR/DCQR	156-1229-01
N74LS258NB/FB	156-1229-01
SN74LS258NP3/JP4	156-1229-01
74LS259N	156-0874-00
74LS259P	156-0874-00
74LS259	156-0874-01
N74LS259PCQR/DCQR	156-0874-02
SN74LS259N	156-0874-00
SN74LS259NP3/JP4	156-0874-02
SN74LS259NDS/JDS	156-0874-02
N74S260ALB	156-0966-01
SN74S260N	156-0966-00
SN74S260NP3	156-0966-01
74LS260	156-0985-02
74LS260PC/DC	156-0985-00
74LS260PCQR/DCQR	156-0985-01
N74LS260N/F	156-0985-00
N74LS260FB/NB	156-0985-01
SN74LS260N/J	156-0985-00
SN74LS260NDS/JDS	156-0985-01
74265	156-0696-01
SN74265JP4	156-0696-02

VENDOR NUMBER	PART NUMBER
SN74265N	156-0696-00
74LS266	156-0652-01
74LS266	156-0652-02
74LS266PC	156-0652-00
74LS266PCQR/DCQR	156-0652-02
DM74LS266N	156-0652-00
DM74LS266NA+/JA+	156-0652-02
N74LS266N	156-0652-00
N74LS266NB/FB	156-0652-02
SN74LS266N	156-0652-00
SN74LS266NDS/JDS	156-0652-02
SN74LS266NP3/JP4	156-0652-02
74273	156-1708-00
74LS273	156-0865-01
74LS273PC/DC	156-0865-00
74LS273PCQR/DCQR	156-0865-02
N74LS273N/F	156-0865-00
SN74LS273N/J	156-0865-00
SN74LS273NP3/JP4	156-0865-02
SN74LS273NDS/PDS	156-0865-02
74279	156-0508-01
74279PC	156-0508-00
74279PCQR/DCQR	156-0508-02
N74279N	156-0508-00
N74279NB/FB	156-0508-02
SN74279N	156-0508-00
SN74279NP3/JP4	156-0508-02
74LS279	156-0804-01
74LS279	156-0804-03
74LS279PC/DC	156-0804-00
74LS279PCQR/DCQR	156-0804-02
DM74LS279NA+/JA+	156-0804-02
SN74LS279N/J	156-0804-00
74LS279N/J	156-0804-00
SN74LS279NDS/JDS	156-0804-02
SN74LS279NP3/JP4	156-0804-02
74S280	156-1014-01
SN74S280N/J	156-1014-00
74LS280	156-0915-01
SN74LS280N	156-0915-00
SN74LS280N3/J4	156-0915-02
74F283	156-1705-00
SN74S283J	156-1292-00
SN74S283JP4	156-1292-01
74LS283PC	156-0679-00
74LS283PCQR/DCQR	156-0679-01
DM74LS283N	156-0679-00
DM74LS283NA+/JA+	156-0679-01
N74LS283N	156-0679-00
N74LS283NB/FB	156-0679-01
SN74LS283N	156-0679-00
SN74LS283NDS/JDS	156-0679-01
SN74LS283NP3/JP4	156-0679-00
DM74S287J	156-1452-00
74S288ASX/N	156-0425-00
DM74S288J	156-1151-00
SN74S288J	156-0785-00
SN74LS290	156-1222-00
74LS295	156-0734-01
74LS295	156-0734-02
74LS295PC/DC	156-0734-00
DM74LS295N/J	156-0734-00
N74LS295	156-0734-00
N74LS295N/F	156-0734-00
SN74LS2905N/J	156-0734-00
SN74LS295N/J	156-0734-01
74298	156-0373-01
74298PC/DC	156-0373-00
74298PCQR/DCQR	156-0373-02
N74298N/J	156-0373-00
N74298NB/FB	156-0373-02
SN74298N/J	156-0373-00
SN74298NP3/JP4	156-0373-02
74LS298PC/DC	156-1045-00
74LS298PCQR/DCQR	156-1045-01

VENDOR NUMBER	PART NUMBER
SN74LS298N/J	156-1045-00
SN74LS298NDS/JDS	156-1045-01
SN74LS298NP3/JP4	156-1045-01
74S299	156-1197-01
SN74S299J	156-1197-00
SN74S299JP4	156-1197-01
74LS299	156-0975-01
74LS299	156-0975-03
74LS299P/C	156-0975-03
DM74LS299NB/JB	156-0975-02
SN74LS299N/J	156-0975-00
SN74LS299NB/JB	156-0975-03
SN74LS299NP3/JP4	156-0975-02
74LS322PC/DC	156-1481-00
SN74LS322N/J	156-1481-00
SN74LS348N/J	156-1176-00
SN74LS348NP3	156-1176-01
74LS352PCQR/DCQR	156-1521-00
SN74LS352NP3/JP4	156-1521-00
SN74LS362N	156-0993-00
SN74LS362N4	156-0993-01
74365	156-1187-00
SN74365N	156-1187-00
74LS365	156-1220-01
SN74LS365AN/J	156-1220-00
SN74LS365NP3/JP4	156-1220-01
DM74LS365N/J	156-1220-00
74LS366	156-0702-01
DM74LS366N/J	156-0702-00
DM74LS366NA+/JA+	156-0702-01
SN74LS366N	156-0702-00
SN74LS366NP3/JP4	156-0702-01
74LS367	156-0852-01
SN74LS367N	156-0852-00
SN74LS367NDS	156-0852-02
SN74LS367NP3	156-0852-02
74LS368PC	156-0720-00
74LS368	156-0720-01
74LS368PCQR/DCQR	156-0720-02
DM74LS368N	156-0720-00
SN74LS368N	156-0720-00
SN74LS368NP3/JP4	156-0720-02
SN74LS368NDS/JDS	156-0720-02
74F373	156-1721-00
74S373N	156-1250-00
MM74C373JA+	156-1398-00
74S373	156-1250-02
AM74S373NB/JB	156-1250-01
SN74S373NP3/JP4	156-1250-02
SN74S373N	156-1250-00
SN74S373J	156-1250-01
AM74S373J	156-1250-01
74LS373N/J	156-1065-00
74LS373PC	156-1065-01
74LS373PC/DC	156-1065-00
AM74LS373PCB/JCB	156-1065-01
SN74LS373N/J	156-1065-00
SN74LS373NP3/JP4	156-1065-01
MM74C374JA+	156-1327-01
MM74C374NA+/JA+	156-1327-00
MC74SC374AC	156-1646-00
MD74SC374AE	156-1327-00
74 F374	156-1704-00
74S374	156-1046-01
74S374JTB	156-1046-02
DM74S374J	156-1046-00
SN74S374J	156-1046-00
SN74S374JP4	156-1046-02
74LS374	156-0982-01
74LS374	156-0982-02
74LS374	156-0982-03
74LS374PC	156-0982-01
74LS374PC/DC	156-0982-00
74LS374PCQR/DCQR	156-0982-03
DM74LS374NA+/JA+	156-0982-03

THIS INDEX IS ARRANGED IN NUMERICAL ORDER, DISREGARDING LETTERS WHICH APPEAR IN SOME VENDOR NUMBERS.

VENDOR NUMBER TO TEK PART NUMBER INDEX (CONT)
INTEGRATED CIRCUITS

4

VENDOR NUMBER	PART NUMBER
SN74LS374N/J	156-0982-00
SN74LS374JTB	156-0982-00
SN74LS374N3/J4	156-0982-02
SN74LS374N3/J4	156-0982-03
SN74LS374NB2/JB2	156-0982-03
N74LS375NB/FB	156-1318-00
SN74LS375N/J	156-1318-00
SN74LS375NP3/JP4	156-1318-00
74LS377	156-0913-01
74LS377PC/DC	156-0913-00
N74LS377N/F	156-0913-00
N74LS377NB/FB	156-0913-02
SN74LS377N/J	156-0913-00
SN74LS377NDS/LDS	156-0913-02
SN74LS377NP3/JP4	156-0913-02
SN74LS378N3/J4	156-1121-00
SN74LS378NP3/JP4	156-1221-00
SN74LS378NDS/JDS	156-1221-00
SN74LS379N/J	156-1326-00
SN74LS379N3/J4	156-1326-00
SN74LS379NB2/JB2	156-1326-00
74S381	156-0691-01
74S381J	156-0691-03
SN74S381N/J	156-0691-00
SN74S381N	156-0691-00
SN74S381J	156-0691-02
MMISN74S381J	156-0691-00
74390	156-0626-02
SN74390N	156-0626-02
SN74390NP3/JP4	156-0626-02
74LS390	156-0910-01
74LS390PC	156-0910-00
74LS390PCQR/DCQR	156-0910-02
SN74LS390N	156-0910-00
SN74LS390NDS/JDS	156-0910-02
SN74LS390NP3/JP4	156-0910-02
74393J	156-0617-01
SN74393N	156-0617-00
74LS393P	156-1172-00
74LS393PCQR/DCQR	156-1172-01
DM74LS393N	156-1172-00
SN74LS393NDS/JDS	156-1172-01
SN74LS393NDS	156-1172-02
SN74LS393NP3	156-1172-02
SN74LS393NP3/JP4	156-1172-01
SN74LS393N	156-1172-00
SN74393NP3/JP4	156-0617-02
74F399PCQR/DCQR	156-1634-00
SN74LS399NP3/JP4	156-1388-00
SN74LS399PC/DC	156-1388-00
SN74LS399DS/JDS	156-1388-00
74LS450	156-1761-00
74LS461	156-1732-00
74S471J	156-0960-00
74LS490PC/DC	156-1448-00
SN74LS490N3/J4	156-1448-00
74ALS564	156-1691-00
74ALS569	156-1757-00
74ALS574	156-1664-00
SN74LS629N/J	156-0861-00
SN74LS629NP3/JP4	156-0861-01
74LS646	156-1661-00
SN74LS670N/J	156-0989-00
SN74LS670NDS/JDS	156-0989-02
SN74LS670NP3/JP4	156-0989-02
74LS670PC/DC	156-0989-00
74LS670N	156-0989-01
DM74LS670N/J	156-0989-00
DM74LS670NA+/JA+	156-0989-02
SN74AS804N/J	156-1617-00
MC74H874P	156-0318-00
74H874C	156-0318-00
74AS881	156-1703-00
MC74C911N/J	156-1430-00
MM74C912N/J	156-1431-00

VENDOR NUMBER	PART NUMBER
MM74C923N	156-1215-00
MM74C923JA+	156-1215-01
SC75012P	156-0930-00
IM7505A-2CJF	156-0635-00
75107APC	156-0177-00
75107PCQR/DCQR	156-0177-02
MC75107P	156-0177-00
MC75107NDS/JDS	156-0177-02
SN75107AN	156-0177-00
SN75107ANP3/JP4	156-0177-02
SN75110AN/J	156-1523-00
75110APC/DC	156-1523-00
MC75110P/L	156-1523-00
MC75140LDS	156-1304-00
SN75140JG4	156-1304-00
75150	156-0139-01
SN75150P	156-0139-00
SN75152	156-0934-00
75154	156-0138-01
75160	156-1414-02
SN75160NP3/JP4	156-1414-01
75161	156-1414-01
SN75161N/J	156-1415-00
SN75162N/J	156-1459-00
SN745183N/J	156-0181-00
75325	156-0206-01
MC75325N/J	156-0206-00
SN75325N	156-0206-02
SN75325N/J	156-0206-00
SN75402NP3/JP4	156-1587-00
DS75451NA+/JA+	156-0094-00
DS75451NA+/JA+	156-0094-02
N75451N	156-0094-00
SN75451NP3/JP4	156-0094-00
SN75451NP3/JP4	156-0094-02
75452	156-0302-01
75452BTC	156-0302-00
75452PCQR/DCQR	156-0302-02
DS75452N/J	156-0302-00
DS75452NA+/JA+	156-0302-02
SN75452BP	156-0302-00
SN75452NP3/JP4	156-0302-02
75453BTC	156-0341-00
LM75453N/J	156-0341-00
LM75453NA+/JA+	156-0341-02
SN75453PP3/JGP4	156-0341-02
SN75453BP/BJG	156-0341-00
SN75453P	156-0341-02
75454	156-0313-01
75454	156-0341-01
DM75454NA+/JA+	156-0313-02
DS75454N/J	156-0313-00
SN75454PP3/JP4	156-0313-02
SN75454P/JG	156-0313-00
LM75454P/JG	156-0313-00
DM75491	156-0507-00
75494	156-0881-01
DS75494N	156-0888-00
DS75494N/A+	156-0888-02
ICM75551PA	156-1408-00
SC77113LH	156-1266-00
SC77161P	156-0048-03
SC77162GH	156-0130-02
7D74S04S	156-1333-00
HL78937	156-1616-00
7905.2	156-0655-01
7905.2	156-0655-02
MC7905.2CTD	156-0655-00
SG79052CP	156-0655-00
UA79521CKC	156-0655-01
UA7952CKC3	156-0655-01
ITS80006	156-0908-00
ITS80007	156-0909-00
D8008-1	156-0643-00
80186	156-1841-00

VENDOR NUMBER	PART NUMBER
8085A-2	156-1088-02
D8088-2	156-1609-01
SL81212	156-0087-00
SL81652	156-0688-01
SL81653	156-0757-01
SL81654	156-0758-01
SL81655	156-0759-01
SL81656	156-0760-01
SL81657	156-0771-01
SL81658	156-0870-01
SL81659	156-1023-01
SL81660	156-1038-01
SL81661	156-0636-02
SL81662	156-0880-02
SL81663	156-1019-02
SL81664	156-1309-00
SL81682	156-0081-02
SL81684	156-1063-01
SL81696	156-0544-02
SL81705	156-0311-02
SL81712	156-1061-02
SL81889	156-1247-01
SL81936	156-0408-01
AM81LS95JB2	156-1277-00
AM81LS95NB2	156-1277-00
SL81959	156-0381-02
SL81960	156-0382-02
SL82027	156-0645-02
8203-3	156-1697-00
SL82080	156-0171-02
SL82082	156-0914-02
N82S100I	156-1269-00
N82S107I	156-1254-00
82S111F	156-1210-00
SL82115	156-0385-02
82S115	156-0769-01
N82S115F	156-0769-00
N82S115F/CB9401F	156-0359-02
N82S115F/CB9400F	156-0360-02
N82S115F/CB9402P	156-0358-02
N82S115F/CB9403F	156-0357-02
N82S116F	156-0984-01
N82S116F	156-0984-00
82S192FN/IN	156-1343-00
SL82131	156-0301-02
SL82132	156-0388-03
N82S181F	156-0976-00
N82LS181	156-1526-00
N82S185F	156-1182-00
N82S191F/I	156-1354-00
SL82266	156-0953-02
C/D8237A-5	156-1606-00
SL82420	156-0304-02
SL82421	156-0413-02
SL82423	156-0646-02
SL82426	156-0739-02
C8253-5	156-1036-00
UPD8253D-5	156-1036-00
AM8255A-5P/DCB	156-1570-01
QP/QD8255A-5	156-1570-01
UPD8257C-5	156-1202-00
SL82589	156-1267-01
SL82738	156-0497-01
8279-5	156-1535-00
AM8279-5N/J	156-1535-00
SL83202J	156-0738-02
84684	156-0197-00
SN84980	156-0324-02
85145	156-0067-00
85147	156-0067-02
85572	156-0356-00
SP8629DP8	156-1248-00
88792N/J	156-0118-00
90071	156-1242-00
90593	156-1551-00

VENDOR NUMBER	PART NUMBER
91124	156-1323-01
SN91340N/J	156-0320-02
91341N	156-0690-02
SL92104	156-1593-00
SN92570J	156-0765-02
93S194PC	156-0744-00
93422	156-1223-00
AM93L422BPC/DC	156-1293-01
93L422PC	156-1293-00
93425ADC	156-1210-00
93427DC	156-0905-00
AM93422PC/DC	156-1360-01
93442DC/PC	156-1360-00
93442DC/PC	156-1360-01
AM9517A-5DC	156-1606-00
95400-DC	156-0881-00
96LS488DC	156-1666-00
SN99135	156-0934-00
SBP9989CJ-1	156-1636-00
100101	156-1034-02
100101F	156-1520-00
F100101FC	156-1034-00
F100101FCQR	156-1034-01
F100101DC	156-1520-00
100102	156-1032-02
100102F	156-1519-00
F100102DC	156-1519-00
F100102FC	156-1032-00
F100102FCQR	157-1032-01
F100107FC	156-1500-00
100107P	156-1500-00
F100107DC	156-1518-00
100107F	156-1518-00
F100112FC	156-1499-00
100112D	156-1499-00
100112FC	156-1499-01
100112F	156-1797-00
100114	156-1033-01
100114	156-1033-03
F100114FC	156-1033-00
F100114FCQR	156-1033-02
F100117FC	156-1498-00
100117D	156-1498-00
100118D	156-1561-00
F100118FC	156-1561-00
F100122DC	156-1516-00
100122D	156-1515-00
F100122FC	156-1515-00
100122F	156-1516-00
100124	156-1671-00
F100125DC	156-1670-00
100131	156-1031-02
100131	156-1031-03
100131FC	156-1031-00
F100131FCQR	156-1031-02
HD100131F	156-1031-00
100136D	156-1563-00
F100136DC	156-1517-00
F100136FC	156-1563-00
100136F	156-1517-00
100141	156-1030-01
100141	156-1030-02
F100141DC	156-1511-00
100141F	156-1511-00
F100141FC	156-1030-00
100145D	156-1513-00
100145F	156-1514-00
F100145DC	156-1514-00
F100145FC	156-1513-00
F100150FC	156-1497-00
100150D	156-1497-00
F100150DC	156-1581-00
F100151DC	156-1512-00
100151F	156-1512-00
F100151FC	156-1501-00

VENDOR NUMBER TO TEK PART NUMBER INDEX (CONT)
INTEGRATED CIRCUITS

VENDOR NUMBER	PART NUMBER
100151D	156-1501-00
F100155DC	156-1510-00
100155F	156-1510-00
F100155FC	156-1496-00
100155D	156-1496-00
F100160DC	156-1506-00
100160F	156-1506-00
F100163FC	156-1557-00
100163Y	156-1557-00
F100164FC	156-1085-00
100164FC	156-1085-02
HD1-0165-5	156-0647-00
F100165DC	156-1678-00
HD100165C	156-1678-00
F100166DC	156-1505-00
100166F	156-1505-00
100170F	156-1554-00
F100170FC	156-1504-00
100170D	156-1504-00
F100170DC	156-1554-00
F100171DC	156-1509-00
100171F	156-1509-00
F100171FC	156-1502-00
100171D	156-1502-00
F100180DC	156-1508-00
100180F	156-1508-00
F100180FC	157-1507-00
100180Y	156-1507-00
TDC1016J-10	156-1441-00
TDC1016J-10	156-1441-00
MBM10470-20	156-1227-00
MBM10470-20	156-1227-01
HM10474-1	156-1679-00
SL110005	156-0850-02
SL110043	156-0576-00
HI1-1800-5	156-0414-00
IMS1400-55	156-1615-00
HD1-4013B-9	156-0366-00
MC140188CL	156-0519-00
IMS14205-55	156-1694-00
HD1-4049B-9	156-0494-00
MC145146L	156-1742-00
MC145155	156-1718-00
HD1-4702-9	156-0850-00
158097N	156-1119-00
MM16353-1	156-1213-01
HM1-6508-9	156-1060-00
HM1-6514-9	156-1301-01
HM1-6562-9	156-0887-00
HD16600-5	156-1047-00
16K7301	156-0710-00
HD1-74C151	156-0869-00
HD1-74C154	156-0650-00
HD1-74C157	156-0549-00
HD174C164	156-0572-00
HD1-74C165	156-0625-00
HD1-74C173	156-0574-00
HD1-74C174	156-0682-00
HD1-74C175	156-0931-00
HD1-74C193	156-0627-00
HD1-74C221	156-0750-00
P21149H-2	156-1695-00
2147-45	156-1690-00
AM21L47-55D-C	156-1613-00
MCM2147C70	156-1228-00
02164-20	156-1626-00
HA2-2625-5	156-0317-00
HA2-2625-5(0796)	156-0317-02
HA2-2655-5	156-0977-00
MP2321-01	156-0717-00
25LS2520	156-1729-00
AM25LS2521PC	156-1273-00
AM25LS2538PCB/DCB	156-1546-00
AM26LS2569PC/DC	156-1375-00
AM26LS2569PCB/DCB	156-1375-01

VENDOR NUMBER	PART NUMBER
D27128-3	156-1696-00
MBM2764-25	156-1652-00
DAC331C-10-1	156-1321-00
36000P-5	156-1361-00
MK36000P/J-4	062-4325-00
MK36000N-4	062-4325-01
MK36000P/J-5	062-4503-00
MK36000N-5	062-4503-01
TMS37C3003LA	156-0051-01
MK3850N-3/P-3	156-1218-00
MK4096K-11	156-0862-00
EDH4528-20	156-1813-00
HN462732	156-1403-00
554123F	156-0603-00
HM6264P-15	156-1842-00
635241	156-0859-00
MCM6605-01	156-0635-01
74ALS1244	156-1754-00
SL802051	156-0331-02
N82S2708F	156-0973-00
N82S2708E	156-0973-00
N8T32-001P	156-1230-00
N8T32-002P	156-1231-00
N8T32-003P	156-1232-00
N8T32-004P	156-1233-00
N8T32-005P	156-1234-00
TIM9904-40J	156-0993-02
TIM9904-40N/J	156-0993-02
1016J-5C10	156-1441-00
SSS1408A-021	156-0509-00
1909058	156-1050-00
F1909073	156-1053-00
N2513/CM2140N	156-0147-00
02782-001	156-0611-00
MP308-0272	156-0854-01
MK3882N-41P-4MKX	156-1620-00
HD3-74C107-9	156-0680-00
53/6353-1J	156-1213-00
HM6116P-3/DP-24	156-1594-00
6309-1/J20	156-1560-00
R6531P-098	156-1530-00
MCM68766C35	156-1610-00
U6A902259X	156-0290-00
ICM7555/883BIPA	156-1408-01
U6B930459X	156-0148-00
U7B931059X	156-0084-00
U7B932251X	156-0247-00
U7/B93L2859X	156-0310-01
P8308A-728	156-0777-00
P8308A-729	156-0778-00
P8308A-730	156-0779-00
P8308A-731	156-0780-00
P8308A-732	156-0781-00
P8308A-733	156-0782-00
P/C8308A-750	156-1100-00
EA8332A-PC/377A	156-1002-00
EA8332A-PC/378A	156-1004-00
EA8332A-PC/379A	156-1010-00
EA8332A-PC/380A	156-1012-00
SG9637-723	156-0053-00
1301-0044	156-0244-00
1302-0155	156-0346-00
2101-1N500NS	156-1052-00
2101-2N6505NS	156-1051-00
21452-000	156-0267-00
21452-000	156-0611-00
AM27S181D-24-1	156-1608-00
29365-001	156-0267-00
29365-001	156-0280-00
321-0056-6	156-0168-00
RO-3-2513-701	156-0401-00
HN462532-DC24C	156-1596-00
46307-001	156-0292-00
46307-001	156-0585-00
HDI-4702-B2118	156-0850-02

VENDOR NUMBER	PART NUMBER
MP-5510-CY-5004	156-1532-00
56644-000	156-0267-00
56644-000	156-0269-00
56644-000	156-0280-00
58210-000	156-0269-00
SC62528L658	156-0224-01
SC62528L660	156-0282-02
77811-000	156-0161-00
77811-000	156-0267-00
78111-000	156-0268-00
77811-000	156-0269-00
77811-000	156-0280-00
QD/P8085- 4447	156-1088-01
D/P8243-S5037	156-1356-00
8316A-1303	156-0899-00
8316A-1303	156-0899-01
8316A-4304	156-0900-00
8316A-4304	156-0900-01
DC01019.14038	156-1605-00
301277-001	156-1193-00

THIS INDEX IS ARRANGED IN NUMERICAL ORDER, DISREGARDING LETTERS WHICH APPEAR IN SOME VENDOR NUMBERS.

PROGRAMMED INTEGRATED CIRCUIT PART NUMBER INDEX

COPIES OF THESE PROGRAMS MAY BE OBTAINED THROUGH REPROGRAPHICS, EXT. 1658

PART NUMBER	MFR'S PART NO.	§§ ST
156-0133-01	E1601	OB
156-0293-02	EA4000	LS
156-0294-00	EA4000	DL
156-0294-02	EA4000	LS
156-0294-03	EA4000	NP
156-0305-02	27LS08	NP
156-0305-03	27LS08	CS
156-0305-04	27LS08	CR
156-0305-05	27LS08	CM
156-0305-06	27LS08	PP
156-0305-07	27LS08	CM
156-0305-08	27LS08	CM
156-0305-09	27LS08	DL
156-0305-10	27LS08	CM
156-0305-11	27LS08	CM
156-0305-12	27LS08	CM
156-0305-13	27LS08	CM
156-0305-14	27LS08	CM
156-0305-15	27LS08	CM
156-0305-16	27LS08	CM
156-0305-17	27LS08	CM
156-0305-18	27LS08	OB
156-0305-19	27LS08	OB
156-0305-20	27LS08	OB
156-0305-21	27LS08	OB
156-0305-22	27LS08	CM
156-0305-23	N8223B	CM
156-0305-24	N8223B	CM
156-0305-25	N8223B	CM
156-0305-26	N8223B	CM
156-0305-27	N8223B	CM
156-0305-28	N8223B	CM
156-0305-29	N8223B	CM
156-0305-30	N8223B	CM
156-0305-31	N8223B	CM
156-0305-32	N8223B	CM
156-0305-33	N8223B	CM
156-0305-34	N8223B	CM
156-0357-02	N8205	CS
156-0358-02	N8205	CS
156-0359-02	N8205	CS
156-0360-02	N8205	CS
156-0363-01	3258DDC	CS
156-0378-03	2503N	LS
156-0380-01	INT602A	CM
156-0380-02	1702A	CS
156-0380-03	1702A	CS
156-0380-04	1702A	CS
156-0380-05	1702A	CS
156-0380-06	1702A	CS
156-0380-07	1702A	CS
156-0380-08	1702A	CS
156-0380-09	1702A	CS
156-0380-10	1702A	CS
156-0380-11	1702A	CM
156-0380-12	1702A	CM
156-0380-13	1702A	CM
156-0380-14	1702A	CM
156-0380-15	1702A	CM
156-0380-16	1702A	CM
156-0425-00	8598	CR
156-0463-01	5203Q	NP
156-0463-02	5203Q	NP
156-0463-03	5203Q	NP
156-0463-04	5203Q	NP
156-0463-05	5203Q	NP
156-0463-06	5203Q	NP
156-0463-07	5203Q	DL
156-0463-08	5203Q	DL
156-0463-11	5203Q	OT
156-0463-12	5203Q	OT
156-0463-13	5203Q	OT
156-0463-14	5203Q	OT
156-0463-15	5203Q	DL
156-0463-16	5203Q	DL

PART NUMBER	MFR'S PART NO.	§§ ST
156-0463-17	5203Q	DL
156-0463-18	5203Q	DL
156-0463-19	5203Q	DL
156-0463-20	5203Q	DL
156-0463-21	5203Q	DL
156-0463-22	5203Q	DL
156-0463-23	5203Q	CM
156-0463-24	5203Q	CM
156-0463-25	5203Q	CM
156-0463-26	5203Q	CM
156-0463-27	5203Q	CM
156-0463-28	5203Q	NP
156-0463-29	5203Q	NP
156-0463-30	5203Q	CS
156-0463-31	5203Q	CS
156-0463-32	5203Q	CS
156-0463-33	5203Q	CS
156-0463-34	5203Q	CS
156-0463-35	5203Q	CS
156-0463-36	5203Q	CS
156-0463-37	5203Q	CM
156-0463-38	5203Q	CM
156-0463-39	5203Q	CM
156-0463-40	5203Q	CM
156-0463-41	5203Q	CM
156-0463-42	5203Q	DL
156-0463-43	5203Q	DL
156-0463-44	5203Q	CM
156-0463-45	5203Q	NP
156-0463-46	5203Q	CM
156-0463-47	5203Q	CM
156-0463-48	5203Q	CM
156-0463-49	5203Q	CM
156-0463-50	5203Q	CM
156-0463-51	5203Q	CM
156-0659-00	MCM6832L	DL
156-0659-01	SCM3953	NP
156-0659-02	MCM6832L	LS
156-0660-00	MCM6832L	DL
156-0660-01	SCM3950	LS
156-0661-00	MCM6832L	DL
156-0661-01	SCM3952	LS
156-0662-00	MCM6832L	DL
156-0662-01	SCM3952	LS
156-0663-00	MCM6832L	DL
156-0663-01	SCM3953	LS
156-0664-00	MCM6832L	DL
156-0664-01	SCM3954	NP
156-0664-02	MCM6832L	LS
156-0665-00	MCM6832L	DL
156-0665-01	SCM3955	NP
156-0665-02	MCM6832L	LS
156-0666-00	MCM6832L	DL
156-0666-01	MCM6832L	LS
156-0667-00	MCM6832L	DL
156-0667-01	SCM3957	NP
156-0667-02	MCM6832L	LS
156-0668-00	MCM6832L	DL
156-0668-01	SCM3958	LS
156-0668-02	MCM6832L	NP
156-0669-00	MCM6832L	DL
156-0669-01	SCM3959	LS
156-0670-00	MCM6832L	DL
156-0670-01	SCM3960	LS
156-0671-00	MCM6832L	DL
156-0671-01	SCM3961	NP
156-0671-02	MCM6832L	LS
156-0672-00	MCM6832L	DL
156-0672-01	MCM6832L	NP
156-0672-02	SCM37200P/L	LS
156-0673-00	MCM6832L	NP
156-0673-01	MCM6832L	NP
156-0673-02	MCM6832L	NP
156-0673-03	MCM6832L	LS
156-0674-00	MCM6832L	DL

PART NUMBER	MFR'S PART NO.	§§ ST
156-0647-01	MCM6832L	NP
156-0674-02	MCM6832L	LS
156-0675-00	MCM6832	NP
156-0675-01	SCM37201	LS
156-0676-00	MCM6832	NP
156-0676-01	SCM37202	NP
156-0676-02	MCM6832	LS
156-0677-00	SCM3860	NP
156-0677-01	SCM3860	LS
156-0678-00	MCM6832	LS
156-0689-01		NP
156-0689-02		NP
156-0689-03		NP
156-0708-01	2708	CM
156-0708-02	2708	CM
156-0708-03	2708	CM
156-0708-04	2708	CM
156-0708-05	2708	CM
156-0708-06	2708	DL
156-0708-07	2708	CM
156-0708-08	2708	CM
156-0708-09	2708	CR
156-0708-10	2708	CR
156-0708-11	2708	CM
156-0708-12	2708	CM
156-0708-13	2708	CM
156-0708-14	2708	CR
156-0708-15	2708	NP
156-0708-16	2708	NP
156-0708-17	2708	NP
156-0708-18	2708	DL
156-0708-19	2708	CM
156-0708-20	2708	CM
156-0708-21	2708	CM
156-0708-22	2708	CM
156-0708-23	2708	CM
156-0708-24	2708	CM
156-0708-25	2708	CM
156-0708-26	2708	PP
156-0708-27	2708	CR
156-0708-28	2708	CS
156-0708-29	2708	CS
156-0708-30	2708	CS
156-0708-31	2708	CS
156-0708-32	2708	NP
156-0708-33	2708	CS
156-0708-34	2708	CS
156-0708-35	2708	CS
156-0708-36	2708	CS
156-0708-37	2708	CS
156-0708-38	2708	DL
156-0708-39	2708	DL
156-0708-40	2708	DL
156-0708-41	2708	CM
156-0708-42	2708	CM
156-0708-43	2708	CM
156-0708-44	2708	CM
156-0708-45	2708E	DL
156-0708-46	2708E	DL
156-0708-47	2708	PP
156-0708-48	2708	PP
156-0709-00	C8316	LR
156-0710-00	C8316	CR
156-0712-00	MCM6832L	NP
156-0712-01	SCM6832	LS
156-0713-00	MCM6832L	NP
156-0713-01	SCM6832	CS
156-0714-00	MCM6832L	NP
156-0714-01	SCM6832	LS
156-0715-00	MCM6832L	NP
156-0715-01	SCM3895	CS
156-0725-00	5213	LR
156-0726-00	5213	LR
156-0747-00	MCM6832L	NP
156-0747-01	MCM6832L	LS

PART NUMBER	MFR'S PART NO.	§§ ST
156-0748-00	MCM6832L	NP
156-0748-01	MCM6832L	LS
156-0769-02	82S115	CS
156-0769-03	82S115	CS
156-0769-04	82S115	CR
156-0769-05	82S115	DL
156-0769-06	82S115	DL
156-0769-07	82S115	DL
156-0769-08	82S115	DL
156-0769-09	82S115	PP
156-0769-10	82S115	DL
156-0769-11	82S115	NP
156-0769-12	82S115	OT
156-0772-01	CM6832	LS
156-0773-01	CM6832	LS
156-0774-01	CM6832	LS
156-0775-01	SCM6832	LS
156-0777-01	68308L	NP
156-0777-02	82S2708	CR
156-0778-01	SCM44602L	NP
156-0778-02	68308L	CR
156-0779-01	SCM44603L	CR
156-0780-00	P8308A	DL
156-0780-01	SCM44604L	NP
156-0780-02	68308L	CR
156-0781-00	P8308A	DL
156-0781-01	SCM44605L	CR
156-0782-00	P8308A	DL
156-0782-01	SCM44606	NP
156-0782-02	68308L	CR
156-0785-01	IM5610	CR
156-0785-02	IM5610	CR
156-0785-03	IM5610	CR
156-0785-04	IM5610	CS
156-0785-05	IM5610	CR
156-0785-06	IM5610	CR
156-0785-07	IM5610	CR
156-0785-08	IM5610	CR
156-0785-09	IM5610	NP
156-0785-10	IM5610	CR
156-0785-11	IM5610	CR
156-0785-12	IM5610	CR
156-0785-13	IM5610	CS
156-0785-14	IM5610	CR
156-0785-15	IM5610	CR
156-0785-16	IM5610	CR
156-0785-17	IM5610	CS
156-0785-18	IM5610	NP
156-0785-19	74S288	CR
156-0785-20	74S288	DL
156-0791-00	MCM6832L	LS
156-0792-00	MCM6832L	NP
156-0792-01	SCM37203	LS
156-0794-00	MCM6832L	NP
156-0794-01	SCM37204	NP
156-0794-02	MCM6832L	LS
156-0855-00	MCM6832L	CM
156-0856-00	SCM6852	LS
156-0857-00	MCM6832L	LS
156-0889-00	9208	NP
156-0890-00	9208	NP
156-0891-00	9208	LR
156-0892-00	9208	CR
156-0899-00	8316A	CR
156-0900-00	8316A	CR
156-0903-01	3624-4	OT
156-0903-02	3624-4	OT
156-0905-01	93427	CS
156-0905-02	93427	CR
156-0905-03	93427	CR
156-0905-04	93427	CR
156-0905-05	93427	CR
156-0905-06	93427	CR
156-0905-07	93427	CR
156-0905-08	93427	CR

§§ FOR STATUS CODES, SEE PAGE 4-58.

PROGRAMMED INTEGRATED CIRCUIT PART NUMBER INDEX

COPIES OF THESE PROGRAMS MAY BE OBTAINED THROUGH REPROGRAPHICS, EXT. 1658.

PART NUMBER	MFR'S PART NUMBER	§§ ST
156-0905-09	93427	CR
156-0905-10	93427	CR
156-0905-11	93427	CR
156-0905-12	93427	CR
156-0905-13	93427	CR
156-0905-14	93427	CR
156-0905-15	93427	CR
156-0905-16	93427	DL
156-0932-00	5243	LR
156-0940-01	5200	DL
156-0940-02	5200	NP
156-0940-03	5200	NP
156-0940-04	5200	NP
156-0940-05	5200	CS
156-0940-06	5200	CS
156-0940-07	5200	NP
156-0940-08	5200	NP
156-0940-09	5200	NP
156-0940-10	5200	NP
156-0940-11	5200	NP
156-0940-12	5200	NP
156-0940-13	5200	NP
156-0940-14	5200	NP
156-0940-15	4662	CS
156-0940-16	5200	CS
156-0960-00	74S471	CR
156-0960-01	74S471	DL
156-0960-02	74S471	DL
156-0960-03	74S471	DL
156-0960-04	74S471	DL
156-0960-05	74S471	CR
156-0960-06	74S471	NP
156-0960-07	74S471	NP
156-0960-08	74S471	NP
156-0971-01	D3604L-6	DL
156-0971-02	D3604L-6	DL
156-0971-03	D3604L-6	DL
156-0971-04	D3604L-6	DL
156-0971-05	D3604L-6	DL
156-0971-06	D3604L-6	DL
156-0973-01	82S2708	CR
156-0973-02	82S2708	CR
156-0973-03	82S2708	CM
156-0973-04	82S2708	CR
156-0973-05	82S2708	CR
156-0976-01	82S181	NP
156-0976-02	82S181	NP
156-0976-03	82S181	DL
156-0976-04	82S181	CR
156-0976-05	82S181	CR
156-0976-06	82S181	NP
156-0976-07	82S181	NP
156-0976-08	82S181	NP
156-0976-09	82S181	NP
156-0976-10	82S181	NP
156-0976-11	82S181	DL
156-0978-00	MCM6832	NP
156-0979-00	MCM6832	NP
156-0980-00	MCM6832	NP
156-0981-00	MCM6832	NP
156-1001-00	TI4732	CS
156-1001-01	TI4732	DL
156-1002-00	TI4732	CS
156-1002-01	TI4732	DL
156-1003-00	TI4732	CS
156-1003-01	TI4732	DL
156-1004-00	TI4732	CS
156-1004-01	TI4732	DL
156-1005-00	TI4732	NP
156-1005-01	4732	CS
156-1005-02	TI4732	DL
156-1006-00	TI4732	NP
156-1006-01	4732	CS
156-1006-02	TI4732	DL
156-1007-00	TI4732	NP

PART NUMBER	MFR'S PART NUMBER	§§ ST
156-1007-01	4732	CS
156-1007-02	TI4732	DL
156-1008-00	TI4732	NP
156-1008-01	4732	CS
156-1008-02	TI4732	DL
156-1009-00	TI4732	CS
156-1010-00	TI4732	CS
156-1011-00	TI4732	DL
156-1012-00	TI4732	CS
156-1017-01	INT2716	CM
156-1017-02	INT2716	CM
156-1017-03	INT2716	PP
156-1017-04	INT2716	PP
156-1017-05	INT2716	PP
156-1017-06	INT2716	PP
157-1017-07	INT2716	PP
156-1017-08	INT2716	PP
156-1017-09	INT2716	PP
156-1057-00	AM9295	DL
156-1067-00	68316E	CR
156-1067-01	2716	DL
156-1068-00	68316E	NP
156-1068-01	2716	CR
156-1069-00	68316E	CR
156-1070-00	68316E	DL
156-1070-01	2716	CR
156-1071-00	68316E	CR
156-1072-00	68316E	CR
156-1073-00	68316E	CR
156-1074-00	68316E	NP
156-1074-01	2716	CR
156-1075-00	68316E	CR
156-1076-00	68316E	CR
156-1077-00	68316E	CR
156-1078-00	68316E	NP
156-1078-01	2716	CR
156-1079-00	68316E	NP
156-1079-01	2716	CR
156-1087-00	5213	LR
156-1089-00	6831B	NP
156-1090-00	6831B	NP
156-1091-00	6831B	OB
156-1092-00	6831B	DL
156-1093-00	6831B	NP
156-1094-00	6831B	NP
156-1095-00	6831B	NP
156-1096-00	6831B	NP
156-1097-00	6831B	NP
156-1098-00	6831B	NP
156-1099-00	4732	DL
156-1100-00	8308	CR
156-1101-01	TM2716	DL
156-1101-02	TM2716	DL
156-1101-03	TM2716	DL
156-1102-00	68316	CR
156-1103-00	68316	CR
156-1104-00	68316	CR
156-1105-00	68316	CR
156-1106-00	68316	DL
156-1107-00	68316	DL
156-1109-00	7488	CR
156-1116-00	6831B	DL
156-1117-00	6831B	DL
156-1128-00	68316E	CR
156-1129-00	63816E	CR
156-1130-00	68316E	DL
156-1131-00	68316E	DL
156-1132-00	6831B	CR
156-1132-01	6831B	DL
156-1135-00	S6831B	NP
156-1136-00	S6831B	DL
156-1137-00	S6831B	NP
156-1138-00	S6831B	NP
156-1139-00	9208	NP
156-1140-00	9208	NP
156-1141-00	9208	NP

PART NUMBER	MFR'S PART NUMBER	§§ ST
156-1142-00	9208	NP
156-1143-00	9208	DL
156-1144-00	9208	DL
156-1145-00	9208	DL
156-1151-01	74S288	DL
156-1151-02	74S288	DL
156-1167-00	4732	DL
156-1174-00	4732	CS
156-1175-00	4732	CS
156-1180-00	2616	DL
156-1181-00	2616	DL
156-1239-00	2332	CM
156-1240-00	4732	CM
156-1358-00	2332	DL
156-1377-00	2716	DL
156-1378-00	2716	DL
156-1379-00	2716	DL
156-1380-00	2716	DL
156-1399-00	9406	CS
156-1410-00	66900	DL

4

PROGRAMMED INTEGRATED CIRCUIT PART NUMBER INDEX

4

PART NUMBER	MFR'S PART NO.	§§ ST
160-0001-00	93427	CR
160-0001-01	93427	DL
160-0002-00	INT2716	PP
160-0002-01	INT2716	NP
160-0002-02	INT2716	NP
160-0002-03	68A316EP	OT
160-0003-00	INT2716	NP
160-0003-01	INT2716	OT
160-0004-00	INT2716	PP
160-0004-01	INT2716	NP
160-0004-02	INT2716	OT
160-0005-00	INT2716	NP
160-0005-01	INT2716	NP
160-0005-02	INT2716	OT
160-0006-00	INT2716	PP
160-0006-01	INT2716	NP
160-0006-02	INT2716	NP
160-0006-03	68A316EP	OT
160-0007-00	INT2716	PP
160-0007-01	INT2716	NP
160-0007-02	INT2716	NP
160-0007-03	68A316EP	OT
160-0008-00	INT2716	PP
160-0008-01	INT2716	NP
160-0008-02	INT2716	NP
160-0008-03	68A316EP	OT
160-0009-00	INT2716	PP
160-0009-01	INT2716	NP
160-0009-02	INT2716	NP
160-0009-03	68A316EP	NP
160-0009-04	INT2716	OT
160-0010-00	INT2616	DL
160-0010-01	S6831B	NP
160-0010-02	S6831B	NP
160-0010-03	2616	NP
160-0010-04	2716	CR
160-0011-00	INT2616	DL
160-0011-01	S6831B	NP
160-0011-02	INT2616	NP
160-0011-03	68A316	CR
160-0012-00	INT2616	NP
160-0012-01	S6831B	NP
160-0012-02	INT2616	NP
160-0012-03	68A316	NP
160-0012-04	2716	CR
160-0013-00	2708	DL
160-0013-01	AMD9208	NP
160-0013-02	2607	NP
160-0013-03	68A308	CR
160-0014-00	2708	DL
160-0014-01	AMD9208	NP
160-0014-02	2607	NP
160-0014-03	68A308	NP
160-0014-04	2708	CR
160-0015-00	2708	DL
160-0015-01	AMD9208	NP
160-0015-02	2708	NP
160-0015-03	68A308	CR
160-0016-00	2708	DL
160-0016-01	AMD9208	NP
160-0016-02	2708	NP
160-0016-03	68A308	CR
160-0017-00	TM2716	NP
160-0017-01	2716	NP
160-0017-02	TMS2716JL	CS
160-0018-00	TM2716	NP
160-0018-01	2716	NP
160-0018-02	TMS2716JL	CS
160-0019-00	TM2716	NP
160-0019-01	2716	CS
160-0020-00	TM2716	NP
160-0020-01	2716	CS
160-0021-00	2616	DL
160-0022-00	27LS08	CM
160-0022-01	74S188	CM

PART NUMBER	MFR'S PART NO.	§§ ST
160-0023-00	82S115	CR
160-0024-00	82S115	CR
160-0025-00	82S115	OT
160-0026-00	27L08	NP
160-0026-01	74S188	CS
160-0027-00	82S115	CR
160-0028-00	82S115	CR
160-0029-00	82S115	OT
160-0030-00	27LS08	DL
160-0031-00	27LS08	CM
160-0032-00	27LS08	CM
160-0033-00	27LS08	CM
160-0034-00	82S2708	DL
160-0034-01	2708	DL
160-0035-00	27S18	DL
160-0035-01	2708	DL
160-0036-00	INT602A	NP
160-0036-01	1702A	OT
160-0037-00	6850	CR
160-0038-00	2332	NP
160-0038-01	2332	CS
160-0039-00	27LS08	CM
160-0040-00	82S23	CS
160-0041-00	82S141	CS
160-0042-00	82S141	CS
160-0043-00	82S141	CS
160-0044-00	82S141	CS
160-0045-00	82S141	CS
160-0046-00	82S141	CS
160-0047-00	2332	NP
160-0047-01	2332	CS
160-0048-00	74S288	CS
160-0049-00	74S288	CS
160-0050-00	82S115	NP
160-0050-01	82S115	CS
160-0051-00	82S115	CS
160-0052-00	82S115	NP
160-0052-01	82S115	CS
160-0053-00	82S115	NP
160-0053-01	82S115	CS
160-0054-00	82S115	CS
160-0055-00	82S115	CS
160-0056-00	5604	CS
160-0057-00	5604	CS
160-0058-00	5604	CS
160-0059-00	5604	CS
160-0060-00	5604	CS
160-0061-00	5604	CS
160-0062-00	5604	CS
160-0063-00	5604	CS
160-0064-00	5604	CS
160-0065-00	5604	CS
160-0066-00	5604	CS
160-0067-00	5604	CS
160-0068-00	5604	CS
160-0069-00	5604	CS
160-0070-00	5604	NP
160-0070-01	2607	NP
160-0070-02	2607	NP
160-0070-03	2607	CM
160-0070-04	2708	CR
160-0071-00	2607	CM
160-0072-00	MM16306-1	DL
160-0073-00	MM16306-1	DL
160-0074-00	MM16306-1	DL
160-0075-00	MM16306-1	DL
160-0076-00	MM16306-1	DL
160-0077-00	MM16306-1	DL
160-0078-00	MM16306-1	DL
160-0079-00	MM16306-1	DL
160-0080-00	MM16306-1	DL
160-0081-00	MM16306-1	DL
160-0082-00	MM16306-1	CR
160-0083-00	82S185	PP
160-0083-01	82S185	CR

PART NUMBER	MFR'S PART NO.	§§ ST
160-0084-00	82S185	PP
160-0084-01	82S185	CR
160-0085-00	82S185	PP
160-0085-01	82S185	CR
160-0086-00	82S185	PP
160-0086-01	82S185	CR
160-0087-00	82S185	PP
160-0087-01	82S185	CR
160-0088-00	82S185	PP
160-0088-01	82S185	CR
160-0089-00	82S185	PP
160-0089-01	82S185	CR
160-0090-00	82S185	PP
160-0090-01	82S185	CR
160-0091-00	82S185	PP
160-0091-01	82S185	CR
160-0092-00	82S185	PP
160-0093-00	C2708	PP
160-0093-01	C2708	NP
160-0093-02	2708	CR
160-0094-00	C2708	PP
160-0094-01	C2708	NP
160-0094-02	2708	CR
160-0095-00	C2708	PP
160-0095-01	C2708	NP
160-0095-02	2708	CR
160-0096-00	C2708	PP
160-0096-01	C2708	NP
160-0096-02	2708	CR
160-0097-00	C2708	PP
160-0097-01	C2708	NP
160-0097-02	2808	CR
160-0098-00	C2708	PP
160-0098-01	C2708	NP
160-0098-02	2708	CR
160-0099-00	C2708	PP
160-0099-01	C2708	NP
160-0099-02	2708	CR
160-0100-00	C2708	PP
160-0100-01	C2708	NP
160-0100-02	2708	CR
160-0101-00	C2708	NP
160-0101-01	C2708	NP
160-0101-02	2708	CR
160-0102-00	C2708	PP
160-0102-01	C2708	NP
160-0102-02	2708	CR
160-0103-00	IM5610	CR
160-0104-00	IM5610	CR
160-0105-00	10139	CR
160-0106-00	10139	CR
160-0107-00	10139	CR
160-0108-00	IM5610	CR
160-0109-00	IM5910	PP
160-0109-01	IM5610	CR
160-0110-00	IM5610	DL
160-0111-00	IM5610	PP
160-0111-01	IM5610	NP
160-0111-02	5610	CR
160-0112-00	IM5610	NP
160-0112-01	2716	NP
160-0112-02	68316	DL
160-0112-03	B2716	CR
160-0113-00	2708	CM
160-0114-00	2708	CM
160-0115-00	2708	CM
160-0116-00	2616	OT
160-0117-00	2616	OT
160-0118-00	2S115	CS
160-0119-00	2716	CM
160-0120-00	93427	CR
160-0121-00	93427	NP
160-0121-01	2616	CR
160-0122-00	IM5610	NP
160-0122-01	5610	CR

PART NUMBER	MFR'S PART NO.	§§ ST
160-0123-00	82S2708	NP
160-0123-01	82S2708	CR
160-0123-02	N82S2708E	MP
160-0124-00	82S2708	MP
160-0124-01	82S2708	CR
160-0124-02	N82S2708E	MP
160-0125-00	82S278	CR
160-0126-00	82S2708	CR
160-0127-00	82S2708	CR
160-0128-00	82S2708	CR
160-0129-00	2708	PP
160-0130-00	2708	PP
160-0131-00	2616	NP
160-0131-01	68A316	CR
160-0132-00	2616	CR
160-0132-01	68A316	CR
160-0133-00	2616	NP
160-0133-01	2616	CR
160-0134-00	2616	NP
160-0134-01	2616	CR
160-0135-00	2616	NP
160-0135-01	2616	CR
160-0136-00	2607	NP
160-0136-01	68A316	CR
160-0137-00	4732	CS
160-0138-00	4732	CS
160-0139-00	4732	CS
160-0140-00	4732	CS
160-0141-00	4732	CS
160-0142-00	4732	CS
160-0143-00	4732	DL
160-0144-00	4732	DL
160-0145-00	4732	CS
160-0146-00	4732	DL
160-0147-00	4732	DL
160-0148-00	4732	CS
160-0149-00	IM5610	CR
160-0149-01	74S288J	MP
160-0150-00	IM5200	CM
160-0150-01	IM5200	CM
160-0151-00	82S181N	CM
160-0151-01	82S181	CM
160-0152-00	52030	CM
160-0153-00	2716	CM
160-0154-00	DM8598	CR
160-0155-00	DM8598	CR
160-0156-00	DM8598	CR
160-0157-00	5610	CR
160-0158-00	5610	CR
160-0159-00	93427	CR
160-0160-00	INT2716	NP
160-0160-01	MCM68316E	LS
160-0161-00	INT2716	NP
160-0161-01	MCM68316E	LS
160-0162-00	2616	NP
160-0162-01	68A316	CR
160-0163-00	2716	NP
160-0163-01	2716	OT
160-0164-00	2716	NP
160-0164-01	2716	OT
160-0165-00	2716	NP
160-0165-01	2716	OT
160-0166-00	2716	NP
160-0166-01	2716	OT
160-0167-00	2716	NP
160-0167-01	2716	OT
160-0168-00	2716	NP
160-0168-01	2716	OT
160-0169-00	82S2708	CM
160-0170-00	2708	CM
160-0171-00	2708	CM
160-0172-00	2708	CM
160-0173-00	2708	CM
160-0174-00	2708	OT
160-0175-00	2708	OT

COPIES OF THESE PROGRAMS CAN BE OBTAINED THROUGH REPROGRAPHICS, EXT. 1658.

PROGRAMMED INTEGRATED CIRCUIT PART NUMBER INDEX

PART NUMBER	MFR'S PART NO.	§§ ST
160-0176-00	2708	OT
160-0177-00	2708	OT
160-0178-00	2708	OT
160-0179-00	2708	OT
160-0180-00	2708	OT
160-0181-00	93427	CM
160-0182-00	82S2708	NP
160-0183-00	82S2708	NP
160-0183-01	2708	CR
160-0184-00	82S2708	CR
160-0185-00	82S2708	DL
160-0185-01	2708	NP
160-0185-02	2708	NP
160-0185-03	2708	CR
160-0186-00	2616	NP
160-0186-02	68A316	CR
160-0187-00	2616	NP
160-0187-01	68A31F	CR
160-0188-00	2616	DL
160-0189-00	2616	DL
160-0190-00	2607	DL
160-0191-00	2716	CM
160-0192-00	2716	CM
160-0193-00	2716	CM
160-0194-00	2716	CM
160-0195-00	IM5610	CR
160-0196-00	2708	PP
160-0197-00	2708	PP
160-0198-00	2708	PP
160-0199-00	2708	PP
160-0200-00	2708	PP
160-0201-00	2616	DL
160-0202-00	2607	DL
160-0203-00	INT2716	CM
160-0204-00	63S141J	CR
160-0204-01	63S141J	CR
160-0205-00	2716	CM
160-0206-00	2716	CM
160-0206-01	2716	CM
160-0207-00	2716	CM
160-0208-00	82S115	CR
160-0209-00	82S115	DL
160-0209-01	82S115	CR
160-0210-00	IM5610	CR
160-0211-00	2332	CM
160-0212-00	2332	CM
160-0213-00	2716	NP
160-0213-01	2716	DL
160-0213-02	TMS2716	CR
160-0214-00	2716	NP
160-0214-01	TMS2716	CR
160-0215-00	5203	CM
160-0215-01	5203Q	CM
160-0216-00	5203	CM
160-0216-01	5203Q	CM
160-0217-00	5203	CM
160-0217-01	5203Q	CM
160-0218-00	5203	CM
160-0218-01	5203Q	CM
160-0219-00	5203	CM
160-0219-01	5203Q	CM
160-0220-00	IM5610	CR
160-0221-00	IM5610	NP
160-0221-01	5610	CR
160-0222-00	IM5610	CR
160-0223-00	IM5610	CR
160-0224-00	2716	CR
160-0225-00	2716	CR
160-0226-00	2716	CR
160-0227-00	IM5610	CR
160-0228-00	2716	CR
160-0229-00	2732A-3	CM
160-0230-00	93427	CR
160-0231-00	82S181	NP
160-0231-01	82S181	CS
160-0232-00	82S181	NP
160-0232-01	82S181	NP
160-0232-02	5200	CS
160-0233-00	82S181	NP
160-0233-01	N82181F	CS
160-0234-00	2632	NP
160-0234-01	2632	DL
160-0235-00	2632	DL
160-0236-00	2632	CR
160-0237-00	2632	NP
160-0237-01	2632	CR
160-0238-00	2632	NP
160-0238-01	2632	CR
160-0238-02	HN462532	CR
160-0239-00	2632	CS
160-0239-01	2632	NP
160-0239-03	HN462532	CR
160-0240-00	2632	CR
160-0241-00	2632	CS
160-0241-01	HN462532	DL
160-0241-02	HN462532	CR
160-0242-00	2632	NP
160-0242-01	2632	CS
160-0242-02	HN462532	CR
160-0243-00	2616	CR
160-0244-00	5200	NP
160-0244-01	5200	CS
160-0245-00	5200	NP
160-0246-00	5200	NP
160-0246-01	5200	NP
160-0246-02	5200	CS
160-0247-00	82S115N	CM
160-0248-00	82S115	CM
160-0249-00	5200	CM
160-0249-01	5200	CM
160-0250-00	82S181	CM
160-0250-01	82S181	CM
160-0251-00	2716	OT
160-0252-00	2716	OT
160-0253-00	2716	NP
160-0253-01	68A316EP	OT
160-0254-00	2708	CM
160-0255-00	2708	CM
160-0256-00	2708	CM
160-0257-00	3624-4	DL
160-0258-00	82S181	CR
160-0258-01	82S181	CS
160-0259-00	5200	NP
160-0259-01	5200	CS
160-0260-00	36000	NP
160-0260-01	36000P-4	NP
160-0260-02	MK36000P-4	OT
160-0260-03	68B364L	PP
160-0261-00	36000	NP
160-0261-01	36000P-4	NP
160-0261-02	MK36000P-4	OT
160-0261-03	68B364L	PP
160-0262-00	36000	PP
160-0262-01	36000P-4	NP
160-0262-02	MK36000P/J-4	OT
160-0262-03	68B364L	PP
160-0263-00	36000	NP
160-0263-01	36000P-4	NP
160-0263-02	36000	NP
160-0263-03	MK36000P/J-4	OT
160-0263-04	68B364L	PP
160-0264-00	36000	NP
160-0264-01	36000P-4	NP
160-0264-02	MK36000P/J-4	OT
160-0264-03	68B364L	PP
160-0265-00	36000	NP
160-0165-01	36000P-4	NP
160-0265-02	MK36000P/J-4	OT
160-0265-03	68B364L	PP
160-0266-00	36000	NP
160-0266-01	36000P-4	NP
160-0266-02	36000	NP
160-0266-03	68B364L	OT
160-0267-00	36000	NP
160-0267-01	36000P-4	NP
160-0267-02	MK36000P/J-4	OT
160-0268-00	36000	NP
160-0269-00	TM2716	NP
160-0269-01	2716	DL
160-0269-02	TMS2716	CR
160-0270-00	82S2708	CM
160-0271-00	82S2708	CM
160-0272-00	82S2708	NP
160-0272-01	82S2708	CR
160-0272-02	N82S2708E	CM
160-0273-00	2708	NP
160-0273-01	2708	NP
160-0273-02	2708	NP
160-0273-03	2708	CM
160-0273-04	2708	CR
160-0274-00	2708	NP
160-0274-01	2708	NP
160-0274-02	2708	CM
160-0274-03	2708	CR
160-0274-04	2708	MP
160-0275-00	74S471	CS
160-0275-01	82S115	CR
160-0276-00	82S2708	NP
160-0276-01	82S2708	CR
160-0276-02	N82S2708E	CM
160-0277-00	82S2708	NP
160-0277-01	82S2708	CR
160-0277-02	N82S2708E	CM
160-0278-00	MK36000	CR
160-0279-00	MK36000	NP
160-0280-00	2632	DL
160-0280-01	2632	CR
160-0280-02	HN462532	CR
160-0281-00	82S107	NP
160-0281-01	82S107	NP
160-0281-02	82S107	NP
160-0281-03	82S107	CM
160-0281-04	82S107	CR
160-0281-05	82S107	MP
160-0282-00	82S107	NP
160-0282-01	82S107	NP
160-0282-02	82S107	NP
160-0282-03	82S107	CM
160-0282-04	82S107	CM
160-0283-00	82S2708	CM
160-0284-00	82S2708	CM
160-0285-00	82S181	DL
160-0285-01	82S181F	CM
160-0286-00	5200	DL
160-0287-00	5200	CM
160-0287-01	5200	CM
160-0288-00	82S181	CM
160-0289-00	2716	DL
160-0290-00	2716	DL
160-0291-00	2716	DL
160-0291-01	TMS2716	DL
160-0291-02	TMS2716JL	CM
160-0292-00	2716	DL
160-0292-01	TMS2716	DL
160-0292-02	TMS2716JL	CM
160-0293-00	2716	DL
160-0293-01	TMS2716	DL
160-0294-00	2716	DL
160-0294-01	TMS2716JL	DL
160-0295-00	2716	CR
160-0296-00	2716	DL
160-0297-00	2716	CR
160-0297-01	TMS2716	DL
160-0298-00	2716	CR
160-0298-01	TMS2716	DL
160-0299-00	2716	DL
160-0300-00	2716	DL
160-0301-00	2716	DL
160-0302-00	2716	DL
160-0303-00	2716	DL
160-0304-00	2716	DL
160-0305-00	2716	DL
160-0306-00	2716	NP
160-0306-01	2716	NP
160-0306-02	2716	NP
160-0306-03	2716	CM
160-0307-00	2716	NP
160-0307-01	2716	NP
160-0307-02	2716	CM
160-0307-03	2716	CR
160-0308-00	2716	NP
160-0308-01	2716	NP
160-0308-02	2716	NP
160-0309-00	2716	NP
160-0309-01	2716	NP
160-0309-02	2716	NP
160-0309-03	2716	MP
160-0309-04	2716	CR
160-0310-00	82S181	NP
160-0310-01	82S181	DL
160-0310-02	82S181	NP
160-0310-03	82S181	CS
160-0311-00	5200	NP
160-0311-01	52S046	DL
160-0311-02	5200	NP
160-0311-03	5200	CS
160-0312-00	82S2708	CM
160-0313-00	82S2708	CM
160-0314-00	2716	OT
160-0315-00	2716	OT
160-0316-00	2716	NP
160-0316-01	2716	NP
160-0317-00	2716	NP
160-0317-01	2716	NP
160-0318-00	2716	NP
160-0318-01	2716	NP
160-0319-00	2716	NP
160-0319-01	2716	NP
160-0319-02	2716	CS
160-0320-00	2716	NP
160-0320-01	2716	NP
160-0321-00	2716	NP
160-0321-01	2716	NP
160-0322-00	2716	NP
160-0322-01	2716	NP
160-0323-00	2716	NP
160-0323-01	2716	NP
160-0324-00	74S471	CR
160-0324-01	74S4715	PP
160-0325-00	74S288	CR
160-0326-00	74S288	CR
160-0327-00	74S288	CR
160-0328-00	68316E	LS
160-0329-00	68316E	LS
160-0330-00	68316E	LS
160-0331-00	68316E	LS
160-0332-00	82S181	OT
160-0333-00	82S181	OT
160-0334-00	82S181	OT
160-0335-00	82S181	OT
160-0336-00	82S2708	OT
160-0337-00	82S2708	OT
160-0338-00	82S2708	OT
160-0339-00	74S288	OT
160-0340-00	74S471	NP
160-0340-01	74S471	NP
160-0340-02	74S471	NP
160-0340-03	74S471	NP
160-0340-04	18S22	NP
160-0340-05	18S22	NP
160-0340-06	18S22	CR

COPIES OF THESE PROGRAMS CAN BE OBTAINED THROUGH REPROGRAPHICS, EXT. 1658.

PROGRAMMED INTEGRATED CIRCUIT PART NUMBER INDEX

PART NUMBER	MFR'S PART NO.	§§ ST
160-0341-00	74S471	NP
160-0341-01	74S471	NP
160-0341-02	74S471	NP
160-0341-03	18S22	NP
160-0341-04	18S22	NP
160-0341-05	18S22	CR
160-0342-00	68A308	CR
160-0342-01	68A308	CR
160-0343-00	9208	NP
160-0343-01	9208	CR
160-0344-00	5200	CM
160-0345-00	2716	CM
160-0346-00	82S181	CM
160-0347-00	2708	CS
160-0348-00	MK36000	NP
160-0349-00	82S181	CM
160-0350-00	82S181	CM
160-0350-01	82S181	CM
160-0350-02	82S181	CM
160-0351-00	82S181	CM
160-0352-00	5200	CM
160-0353-00	5200	CM
160-0353-01	5200	CM
160-0353-02	5200	CM
160-0354-00	82S181	NP
160-0354-01	N82S181F	CS
160-0355-00	5200	NP
160-0355-01	5200	CS
160-0356-00	2708	CS
160-0357-00	5610	CR
160-0358-00	MK36000P-4	CR
160-0359-00	MK36000P-4	CR
160-0360-00	MK36000P-4	CR
160-0361-00	MK36000P-4	CR
160-0362-00	6831	CR
160-0363-00	74S288	CR
160-0364-00	74S288	CR
160-0365-00	2716	PP
160-0366-00	2716	PP
160-0367-00	68A308	CR
160-0367-01	MCM68A308	CR
160-0368-00	2716	PP
160-0369-00	2716	PP
160-0370-00	2716	PP
160-0371-00	2332	CS
160-0372-00	2332	CS
160-0373-00	2332	CS
160-0374-00	2332	CS
160-0375-00	2332	CS
160-0376-00	2332	CS
160-0377-00	8192	CR
160-0378-00	8192	CR
160-0379-00	82S107	NP
160-0379-01	82S107	NP
160-0379-02	82S107	NP
160-0379-03	82S107	NP
160-0379-04	82S107	NP
160-0379-05	82S107	CR
160-0380-00	82S107	NP
160-0380-01	82S107	NP
160-0380-02	82S107	NP
160-0380-03	82S107	NP
160-0380-04	82S107	NP
160-0380-05	82S107	CR
160-0381-00	2716	NP
160-0382-00	2716	NP
160-0382-01	82S107	CR
160-0383-00	2716	NP
160-0383-01	2716	CR
160-0383-02	B2716	MP
160-0384-00	2708	CR
160-0385-00	82S2708	CR
160-0386-00	82S2708	NP
160-0386-01	82S2708	CR
160-0387-00	82S2708	CR
160-0388-00	82S2708	CR

PART NUMBER	MFR'S PART NO.	§§ ST
160-0388-00	82S2708	CR
160-0390-00	82S2708	CR
160-0391-00	5610	CR
160-0392-00	5610	CR
160-0393-00	5610	CR
160-0394-00	5610	CR
160-0395-00	2708	NP
160-0395-01	2708	NP
160-0395-02	2708	NP
160-0395-03	2708	NP
160-0395-04	2708	CR
160-0396-00	1M5200	DL
160-0397-00	82S291	DL
160-0398-00	82S129	CR
160-0399-00	82S2708	NP
160-0399-01	82S2708	CR
160-0399-02	82S2708	DL
160-0400-00	82S2708	CR
160-0401-00	82S2708	DL
160-0402-00	82S2708	DL
160-0403-00	82S100	CR
160-0404-00	MCM68A308	PP
160-0405-00	8048	DL
160-0406-00	5610	CM
160-0407-00	2718	CM
160-0408-00	36000	CR
160-0409-00	36000	CR
160-0410-00	36000	CR
160-0411-00	36000	CR
160-0412-00	2333	CR
160-0413-00	2332	NP
160-0413-01	2732	PP
160-0413-02	2732	CR
160-0413-03	2732	PP
160-0414-00	2332	NP
160-0414-01	2732	PP
160-0414-02	2732	CR
160-0414-03	2732	PP
160-0415-00	2332	NP
160-0415-01	2732	NP
160-0415-02	2732	CR
160-0416-00	2332	NP
160-0416-01	2732	NP
160-0416-02	2732	CR
160-0417-00	2332	NP
160-0417-01	2732	PP
160-0417-02	2732	CR
160-0418-00	2332	NP
160-0418-01	2732	PP
160-0418-02	2732	CR
160-0419-00	2332	NP
160-0419-01	2732	NP
160-0419-02	2732	CR
160-0420-00	2332	NP
160-0420-01	2732	NP
160-0420-02	2732	CR
160-0421-00	2332	NP
160-0421-01	2732	PP
160-0421-02	2732	CR
160-0422-00	2332	NP
160-0422-01	2732	PP
160-0422-02	2732	CR
160-0423-00	2332	NP
160-0423-01	2732	PP
160-0423-02	2732	CR
160-0424-00	2332	NP
160-0424-01	2732	PP
160-0424-02	2732	CR
160-0425-00	2332	NP
160-0425-01	2732	NP
160-0425-02	2732	CR
160-0426-00	2332	NP
160-0426-01	2732	NP
160-0426-02	2732	CR
160-0427-00	2332	NP

PART NUMBER	MFR'S PART NO.	§§ ST
160-0427-01	2732	NP
160-0427-02	2732	CR
160-0428-00	2332	NP
160-0228-01	2732	NP
160-0428-02	2732	CR
160-0429-00	2332	NP
160-0429-01	2732	NP
160-0429-02	2732	CR
160-0430-00	2332	NP
160-0430-01	2732	NP
160-0430-02	2732	CR
160-0431-00	2332	NP
160-0431-01	2732	PP
160-0431-02	2732	CR
160-0432-00	2332	NP
160-0432-01	2732	PP
160-0432-02	2732	CR
160-0433-00	2332	NP
160-0433-01	2732	PP
160-0433-02	2732	CR
160-0434-00	2332	NP
160-0434-01	2732	PP
160-0434-02	2732	CR
160-0435-00	2332	DL
160-0436-00	2332	DL
160-0437-00	2332	DL
160-0438-00	2332	DL
160-0439-00	2332	DL
160-0400-00	2332	DL
160-0441-00	2332	DL
160-0442-00	2332	DL
160-0443-00	2332	DL
160-0444-00	2332	DL
160-0445-00	82S107	NP
160-0445-01	82S107	CR
160-0446-00	93427	CM
160-0447-00	2716	NP
160-0447-01	2716	NP
160-0447-02	2716	CR
160-0448-00	2716	NP
160-0448-01	2716	CR
160-0449-00	2716	NP
160-0449-01	2716	NP
160-0449-02	2716	NP
160-0449-03	2716	CR
160-0450-00	2716	NP
160-0450-01	2716	NP
160-0450-02	2716	NP
160-0450-03	2716	CR
160-0451-00	2716	NP
160-0451-01	2716	CR
160-0452-00	2716	NP
160-0452-01	2716	CR
160-0453-00	2716	NP
160-0453-01	2716	NP
160-0453-02	2716	CR
160-0454-00	2716	NP
160-0454-01	2716	NP
160-0454-02	2716	CR
160-0455-00	2716	NP
160-0455-01	2716	CR
160-0456-00	2716	NP
160-0456-01	2716	CR
160-0457-00	2716	NP
160-0457-01	2716	NP
160-0457-02	2716	CR
160-0458-00	5610	PP
160-0459-00	36000P-5	NP
160-0459-01	MK36000P/J-5	CR
160-0460-00		DL
160-0461-00		DL
160-0462-00	2716	OT
160-0463-00	2716	OT
160-0464-00	2716	PP
160-0465-00	2716	PP

PART NUMBER	MFR'S PART NO.	§§ ST
160-0466-00	2716	NP
160-0466-01	2716	CR
160-0467-00	2716	NP
160-0467-01	2716	CR
160-0468-00	6353-1	CR
160-0469-00	6353-1	CR
160-0470-00	6353-1	CR
160-0471-00	93427	CR
160-0471-01	6353-1	CR
160-0472-00	93427	CR
160-0473-00	93427	CR
160-0474-00	93427	CR
160-0475-00	6353-1	CR
160-0476-00	6353-1	CR
160-0477-00	93427	CR
160-0478-00	6353-1	CR
160-0479-00	6353-1	CR
160-0480-00	6353-1	CR
160-0480-01	6353-1J	CR
160-0481-00	6353-1	CR
160-0482-00	6353-1	CR
160-0483-00	6353-1	CR
160-0484-00	93427	CR
160-0485-00	93427	CR
160-0486-00	93427	CR
160-0487-00	2716	CR
160-0487-01	2716	CR
160-0488-00	2716	CR
160-0488-01	2716	CR
160-0489-00	2716	CR
160-0489-01	2716	CR
160-0490-00	2716	PP
160-0491-00	2716	DL
160-0492-00	2716	DL
160-0493-00	82S115	CR
160-0494-00	2708	CM
160-0495-00	2716	CM
160-0496-00	2708	CM
160-0497-00	2708	CM
160-0498-00	6353-1	DL
160-0499-00	6353-1	DL
160-0500-00	6353-1	CR
160-0501-00	6353-1	CR
160-0502-00	6353-1	CR
160-0503-00	6353-1	CR
160-0504-00	6353-1	CR
160-0505-00	6353-1	CR
160-0506-00	6353-1	CR
160-0407-00	6353-1	CR
160-0508-00	6353-1	CR
160-0509-00	6353-1	CR
160-0510-00	6353-1	CR
160-0511-00	6353-1	CR
160-0512-00	6353-1	CR
160-0513-00	6353-1	CR
160-0514-00	6353-1	CR
160-0515-00	6353-1	CR
160-0516-00	6353-1	CR
160-0517-00	6353-1	CR
160-0518-00	6353-1	CR
160-0519-00	6353-1	CR
160-0520-00	6353-1	CR
160-0521-00	6353-1	CR
160-0522-00	6353-1	CR
160-0523-00	6353-1	CR
160-0524-00	6353-1	CR
160-0525-00	6353-1	CR
160-0526-00	6353-1	CR
160-0527-00	6353-1	CR
160-0528-00	6353-1	CR
160-0529-00	6353-1	CR
160-0530-00	6353-1	CR
160-0531-00	6353-1	CR
160-0532-00	6353-1	CR
160-0533-00	6353-1	CR
160-0534-00	6353-1	CR
160-0535-00	6353-1	CR
160-0536-00	6353-1	CR
160-0537-00	6353-1	CR
160-0538-00	6353-1	CR

COPIES OF THESE PROGRAMS CAN BE OBTAINED THROUGH REPROGRAPHICS, EXT. 1658.

PROGRAMMED INTEGRATED CIRCUIT PART NUMBER INDEX

PART NUMBER	MFR'S PART. NO.	§§ ST
160-0539-00	6353-1	CR
160-0540-00	6353-1	PP
160-0541-00	6353-1	PP
160-0542-00	6353-1	DL
160-0543-00	2716	NP
160-0543-01	2732	PP
160-0543-02	2732	CR
160-0544-00	2716	NP
160-0544-01	2732	PP
160-0544-02	2732	CR
160-0545-00	2716	NP
160-0545-01	2732	PP
160-0545-02	2732	PP
160-0546-00	2716	NP
160-0546-01	2732	PP
160-0546-02	2732	PP
160-0547-00	2716	CR
160-0548-00	2716	CR
160-0549-00	2716	CR
160-0550-00	2716	CR
160-0551-00	2716	CR
160-0552-00	2716	CR
160-0553-00	2716	CR
160-0554-00	2716	CR
160-0555-00	2716	CR
160-0556-00	2716	CR
160-0557-00	2716	CR
160-0558-00	2716	CR
160-0559-00	2716	CR
160-0560-00	2716	CR
160-0561-00	2716	CR
160-0562-00	2716	CR
160-0563-00	2716	CR
160-0564-00	2716	CR
160-0565-00	2716	CR
160-0566-00	2716	CR
160-0567-00	2716	CR
160-0568-00	2716	CR
160-0569-00	2716	CR
160-0570-00	2716	CR
160-0571-00	2716	CR
160-0572-00	2716	CR
160-0573-00	2716	CR
160-0574-00	2716	CR
160-0575-00	2716	CR
160-0576-00	2716	CR
160-0577-00	2716	CR
160-0578-00	2716	CR
160-0579-00	2716	CR
160-0580-00	2716	CR
160-0580-01	2732	PP
160-0580-02	82S107	PP
160-0581-00	2732A-3	CR
160-0582-00	2732A-3	CR
160-0583-00	2732A-3	CR
160-0584-00	2732A-3	CR
160-0585-00	2732A-3	CR
160-0586-00	2732A-3	CR
160-0587-00	2732A-3	CR
160-0588-00	2732A-3	CR
160-0589-00	2732A-3	CR
160-0590-00	2732A-3	CR
160-0591-00	2732A-3	CR
160-0592-00	2732A-3	CR
160-0593-00	2732A-3	CR
160-0594-00	2732A-3	CR
160-0595-00	2732A-3	CR
160-0596-00	2732A-3	CR
160-0597-00	2732A-3	CR
160-0598-00	2732A-3	CR
160-0599-00	2732A-3	CR
160-0600-00	2732A-3	CR
160-0601-00	2732A	CR
160-0602-00	2732A	CR
160-0603-00	2732A	CR

PART NUMBER	MFR'S PART NO.	§§ ST
160-0604-00	2732A	CR
160-0605-00	2716	PP
160-0606-00	2716	PP
160-0607-00	2716	PP
160-0608-00	2716	PP
160-0609-00	2716	PP
160-0610-00	2716	PP
160-0611-00	2716	PP
160-0612-00	6353-1	DL
160-0613-00	6353-1	DL
160-0614-00	6353-1	DL
160-0615-00	6353-1	CR
160-0616-00	6353-1	CR
160-0617-00	6353-1	CR
160-0618-00	6353-1	CR
160-0619-00	6353-1	CR
160-0620-00	6353-1	CR
160-0621-00	6353-1	CR
160-0622-00	6353-1	CR
160-0623-00	6353-1	CR
160-0624-00	6353-1	CR
160-0625-00	6353-1	CR
160-0626-00	6353-1	CR
160-0627-00	6353-1	CR
160-0628-00	6353-1	CR
160-0629-00	6353-1	CR
160-0630-00	6353-1	CR
160-0631-00	6353-1	CR
160-0632-00	6353-1	CR
160-0633-00	6353-1	CR
160-0634-00	6353-1	CR
160-0635-00	6353-1	CR
160-0636-00	6353-1	CR
160-0637-00	6353-1	CR
160-0638-00	6353-1	CR
160-0639-00	6353-1	CR
160-0640-00	6353-1	CR
160-0641-00	6353-1	CR
160-0642-00	6353-1	CR
160-0643-00	6353-1	CR
160-0644-00	6353-1	CR
160-0645-00	6353-1	CR
160-0646-00	6353-1	CR
160-0647-00	6353-1	CR
160-0648-00	6353-1	CR
160-0649-00	6353-1	CR
160-0650-00	6353-1	PP
160-0651-00	6353-1	PP
160-0652-00	6353-1	PP
160-0653-00	6353-1	PP
160-0654-00	6353-1	PP
160-0655-00	6353-1	CR
160-0656-00	6353-1	CR
160-0657-00	6353-1	CR
160-0657-02	10144	CR
160-0658-00	6353-1	CR
160-0659-00	6353-1	CR
160-0660-00	6353-1	CR
160-0661-00	6353-1	CR
160-0662-00	6353-1	CR
160-0663-00	6353-1	CR
160-0664-00	6353-1	CR
160-0665-00	6353-1	CR
160-0666-00	6353-1	CR
160-0667-00	6353-1	CR
160-9668-00	6353-1	CR
160-0669-00	6353-1	CR
160-0670-00	6353-1	CR
160-0671-00	6353-1	CR
160-0672-00	6353-1	CR
160-0673-00	6353-1	CR
160-0674-00	6353-1	CR
160-0675-00	6353-1	CR
160-0676-00	6353-1	CR
160-0677-00	6353-1	CR

PART NUMBER	MFR'S PART NO.	§§ ST
160-0678-00	6353-1	CR
160-0679-00	6353-1	CR
160-0680-00	6353-1	CR
160-0681-00	6353-1	CR
160-0682-00	6353-1	DL
160-0683-00	6353-1	DL
160-0684-00	6353-1	DL
160-0685-00	6353-1	DL
160-0686-00	6353-1	DL
160-0687-00	6353-1	DL
160-0688-00	6353-1	DL
160-0689-00	6353-1	DL
160-0690-00	6353-1	DL
160-0691-00	6353-1	DL
160-0692-00	6353-1	DL
160-0693-00	6353-1	DL
160-0694-00	6353-1	DL
160-0695-00	6353-1	DL
160-0696-00	6353-1	DL
160-0697-00	6353-1	DL
160-0698-00	6353-1	DL
160-0699-00	6353-1	DL
160-0700-00	6353-1	DL
160-0701-00	6353-1	DL
160-0702-00	6353-1	CR
160-0703-00	6353-1	CR
160-0704-00	6353-1	CR
160-0705-00	6353-1	CR
160-0706-00	6353-1	CM
160-0706-01	TMS2716	CM
160-0707-00	2716	CM
160-0707-01	TMS2716	CM
160-0708-00	2716	CM
160-0708-01	TMS2716	CM
160-0709-00	TMS2716	CM
160-0709-01	TM2716	CM
160-0710-00	82S2708	CM
160-0711-00	82S2708	CM
160-0712-00	82S2708	CM
160-0713-00	82S2708	CM
160-0714-00	2708	CM
160-0715-00	2708	CM
160-0716-00	2708	CM
160-0717-00	2708	CM
160-0718-00	2632	OT
160-0719-00	2632	OT
160-0720-00	2716	PP
160-0721-00	74S472	DL
160-0722-00	2761	CR
160-0723-00	2761	CM
160-0724-00	2708	CR
160-0725-00	IM5200	CM
160-0725-01	5200	CM
160-0726-00	82S181	CM
160-0726-01	82S2708	CM
160-0727-00	5610	CR
160-0728-00	INT2716	NP
160-0728-01	2716	CR
160-0729-00	2708	CS
160-0730-00	MM5241	OB
160-0731-00	2732	DL
160-0731-01	2732	CR
160-0732-00	2716	NP
160-0733-01	2716	CR
160-0734-02	B2716	MP
160-0734-00	6349-1J	CR
160-0735-00	6349-1J	NP
160-0735-01	6349-1J	CR
160-0736-00	6349-1J	CR
160-0737-00	6349-1J	NP
160-0737-01	6349-1J	CR
160-0738-00	6349-1J	CR
160-0739-00	82S115N	DL
160-0740-00	2708	CM
160-0741-00	2708	CM
160-0742-00	2708	CM

PART NUMBER	MFR'S PART NO.	§§ ST
160-0743-00	S6831B	CR
160-0744-00	S6831B	NP
160-0744-01	2716	CR
160-0745-00	S6831B	NP
160-0745-01	2716	CR
160-0746-00	S6831B	DL
160-0746-01	2716	NP
160-0746-02	2716	CR
160-0747-00	S6831B	DL
160-0747-01	2716	CR
160-0748-00	S6831B	CR
160-0749-00	AMI6831B	CR
160-0750-00	AMI6831BEC	CR
160-0751-00	N82S115N	CR
160-0752-00	2716	CR
160-0753-00	2716	CR
160-0754-00	2716	CR
160-0755-00	N82S115N	CR
160-0756-00	N82S115N	CR
160-0757-00	2708	CR
160-0758-00	N82S115N	CR
160-0759-00	MK36000P/J-5	NP
160-0759-01	MK36000P/J-5	CR
160-0760-00	INT2716	OT
160-0761-00	INT2716	OT
160-0762-00	S6831B	NP
160-0762-01	2716	CR
160-0763-00	INT2716	OT
160-0764-00	INT2716	OT
160-0765-00	INT2716	OT
160-0766-00	MK36000P-4	DL
160-0767-00	MK36000P-5	DL
160-0768-01	NEC2316EC-757	SC
160-0771-00	INTB2716	SC
160-0771-01	2716	CR
160-0772-00	INTB2716	PP
160-0772-01	2716	CR
160-0773-00	INTB2716	PP
160-0773-01	2716	CR
160-0774-00	INTB2716	PP
160-0774-01	2716	CR
160-0775-00	INTB2716	PP
160-0775-01	2716	CR
160-0776-00	INTB2716	PP
160-0776-01	2716	CR
160-0777-00	INTB2716	PP
160-0777-01	2716	CR
160-0778-00	INTB2716	PP
160-0778-01	2716	CR
160-0779-00	INTB2716	PP
160-0779-01	2716	CR
160-0780-00	INTB2716	PP
160-0780-01	2716	CR
160-0781-00	INTB2716	CR
160-0782-00	INTB2716	CR
160-0783-00	INTB2716	PP
160-0783-01	2716	CR
160-0784-00	INTB2716	CR
160-0785-00	INTB2716	PP
160-0785-01	2716	CR
160-0786-00	IM5610CDE	CR
160-0787-00	INTB2716	PP
160-0787-01	2716	CR
160-0788-00	INTB2716	PP
160-0788-01	2716	CR
160-0789-00	INTB2716	CR
160-0790-00	INTB2716	CR
160-0791-00	INTB2716	PP
160-0792-00	INTB2716	PP
160-0793-00	IM5610	DL
160-0794-00	IM5610	PP
160-0795-00	IM5610	PP
160-0796-00	6500/1	CR
160-0798-00	2705	CM
160-0799-00	2708	CM

4

COPIES OF THESE PROGRAMS CAN BE OBTAINED THROUGH REPROGRAPHICS, EXT. 1658.

PROGRAMMED INTEGRATED CIRCUIT PART NUMBER INDEX

4

PART NUMBER	MFR'S PART NO.	§§ ST
160-0800-00	2708	CM
160-0801-00	2732	NP
160-0801-01	2732	CR
160-0801-02	2332	DL
160-0802-00	2332	NP
160-0802-01	2732	CR
160-0803-00	MD36000P-5	CR
160-0804-00	MK36000P-5	CR
160-0805-00	MK36000P-5	CR
160-0806-00	MK36000P-5	DL
160-0807-00	82S181	CS
160-0808-00	2332	DL
160-0809-00	2716	OT
160-0810-00	2716	OT
160-0811-00	2716	CR
160-0812-00	2716	CR
160-0813-00	2716	CR
160-0814-00	2716	PP
160-0815-00	2716	CR
160-0816-00	2716	CM
160-0816-01	2716	CM
160-0817-00	2716	CM
160-0817-01	2716	CM
160-0818-00	36000P/J/N-5	CR
160-0819-00	36000P/J/N-5	CR
160-0820-00	52S046	CM
160-0820-01	5200	CM
160-0821-00	82S181	CM
160-0821-01	82S181	CM
160-0822-00	72S288	CR
160-0823-00	82SL181	NP
160-0823-01	82LS181	CR
160-0824-00	3624-4	DL
160-0825-00	MK36000P-5	DL
160-0826-00	36000N-5	CR
160-0827-00	MK36000N-5	CR
160-0828-00	MK36000N-5	CR
160-0829-00	MK36000N-5	CR
160-0829-01	MCM6874C/L	CR
160-0830-00	MK36000N-5	CR
160-0831-00	MK36000N-5	PP
160-0832-00	MK36000N-5	CR
160-0833-00	IM5610	CR
160-0834-00	74S288	CR
160-0835-00	B2716	CR
160-0836-00	2732	NP
160-0836-01	2716	PP
160-0836-02	2732	DL
160-0836-03	2732	NP
160-0836-04	2732	NP
160-0836-05	2732834	CR
160-0837-00	MCM68A332	CR
160-0838-00	MK36000P-5	CR
160-0839-00	MK36000P-5	CR
160-0840-00	82S2708	CM
160-0841-00	82S181	CM
160-0842-00	5200	CM
160-0843-00	8041A	CR
160-0844-00	2716	CM
160-0844-01	2716	CM
160-0845-00	2716	CM
160-0845-01	2716	CM
160-0846-00	82S161	CM
160-0846-01	82S161	CM
160-0847-00	82S181	CM
160-0847-01	82S181	CM
160-0848-00	5200	CM
160-0848-01	5200	CM
160-0849-00	5200	CM
160-0849-01	5200	CM
160-0850-00	MM52132J	CR
160-0851-00	6349-1	CR
160-0852-00	82S115	CR
160-0853-00	B2716	CR
160-0853-01	6831	PP

PART NUMBER	MFR'S PART NO.	§§ ST
160-0854-00	B2716	CR
160-0854-01	6831	PP
160-0855-00	18S42	CR
160-0856-00	93427	CR
160-0857-00	2716	NP
160-0857-01	B2716	CR
160-0858-00	2716	CR
160-0859-00	2716	CR
160-0860-00	52S046	DL
160-0861-00	5200	DL
160-0862-00	82S2708	CM
160-0863-00	82S181	CM
160-0864-00	2732	CR
160-0865-00	2732	CM
160-0866-00	82S181	CM
160-0866-01	82S181	CM
160-0867-00	B2716	CM
160-0867-01	2716	CM
160-0868-00	B2716	CM
160-0868-01	2716	CM
160-0869-00	82S181	CM
160-0870-00	B2716	CR
160-0871-00	2716	CM
160-0872-00	2716	CM
160-0873-00	2716	CM
160-0874-00	2716	CM
160-0875-00	2716	CM
160-0876-00	INT2716	CR
160-0877-00	INT2716	CR
160-0878-00	INT2716	CR
160-0879-00	INT2716	CR
160-0880-00	INT2716	CR
160-0881-00	INT2716	CR
160-0882-00	INT2716	CR
160-0883-00	INT2716	CR
160-0884-00	74S472	CR
160-0885-00	5610	CR
160-0886-00	2716	NP
160-0886-01	2716	CR
160-0886-02	2716	NP
160-0886-03	2715	NP
160-0886-04	2716	CR
160-0886-05	2716	CR
160-0887-01	2716	DL
160-0887-02	2716	PP
160-0888-01	2716	NP
160-0888-02	2716	PP
160-0889-00	5200	CM
160-0889-01	5200	CM
160-0890-00	INT2716	DL
160-0890-01	INT2716	CR
160-0890-02	2716	CR
160-0891-00	INT2716	DL
160-0891-01	INT2716	CR
160-0892-00	IM5610	CR
160-0893-00	IM5610	CR
160-0894-00	2732	DL
160-0894-01	2732	PP
160-0895-00	2732	DL
160-0896-00	74S472	CR
160-0897-00	760A9	CR
160-0898-00	758A9	CR
160-0899-00	756A9	CR
160-0900-00	M9312	CR
160-0901-00	5200	CM
160-0902-00	82S181	CM
160-0903-00	2716	CM
160-0903-01	2716	CM
160-0904-00	82S181	CM
160-0904-01	82S2708/82S181	CM
160-0905-00	5200	CM
160-0905-01	5200	CM
160-0906-00	MK36000N-5	CR
160-0907-00	MK36000N-5	CR
160-0908-00	MK36000P-5	CR

PART NUMBER	MFR'S PART NO.	§§ ST
160-0909-00	MK36000P-5	CR
160-0910-00	MK36000P-5	CR
160-0911-00	MK36000P-5	CR
160-0912-00	2716	CM
160-0913-00	2716	CM
160-0914-00	2716	NP
160-0914-01	2732	PP
160-0914-02	2732	CR
160-0915-00	2716	NP
160-0915-01	2732	PP
160-0915-02	2732	CR
160-0916-00	2716	CR
160-0917-00	2716	CR
160-0918-00	2716	OT
160-0919-00	2716	OT
160-0920-00	2716	OT
160-0921-00	2716	OT
160-0922-00	2716	CR
160-0923-00	2716	PP
160-0924-00	2716	PP
160-0925-00	2716	DL
160-0926-00	2716	CR
160-0927-00	2716	CR
160-0928-00	MK36000N-5	CR
160-0928-01	MCM68764C/L	CR
160-0930-00	MK36000N-5	CR
160-0930-01	MCM68764C/L	CR
160-0931-00	MK36000N-5	CR
160-0931-01	MCM68764C/L	CR
160-0932-00	MK36000N-5	CR
160-0933-00	2716	CR
160-0934-00	MCM68B364	CR
160-0935-00	MCM68B364	CR
160-0936-00	MCM68B364	CR
160-0937-00		CR
160-0938-00		CR
160-0939-00	82S2708	CM
160-0939-01	82S2708	CM
160-0940-00	82S2708	CM
160-0941-00	82S2708	CM
160-0941-01	82S2708	CM
160-0942-00	5200	CM
160-0943-00	5200	CM
160-0943-01	5200	CM
160-0944-00	5200	CM
160-0944-01	5200	CM
160-0945-00	5200	CM
160-0946-00	5200	CM
160-0947-00	2716	NP
160-0947-01	2716	NP
160-0947-02	2716	CR
160-0948-00	2716	NP
160-0948-01	2716	CR
160-0949-00	2716	NP
160-0949-01	2716	CR
160-0950-00	2716	NP
160-0950-01	2716	NP
160-0950-02	2716	CR
160-0951-00	2716	NP
160-0951-01	2716	CR
160-0952-00	2716	NP
160-0952-01	2716	CR
160-0953-00	2716	NP
160-0953-01	2716	NP
160-0953-02	2716	CR
160-0954-00	5200	DL
160-0955-00	2716	DL
160-0956-00	2716	DL
160-0956-01	2732A-3	CR
160-0956-02	D2732A-3	PP
160-0957-00	2716	DL
160-0957-01	2732A-3	CR
160-0957-02	D2732A-3	PP
160-0958-00	2716	DL
160-0958-01	2732A-3	CR

PART NUMBER	MFR'S PART NO.	§§ ST
160-0958-02	D2732A-3	PP
160-0959-00	2716	DL
160-0959-01	2732A-3	CR
160-0959-02	D2732A-3	PP
160-0960-00	2716	DL
160-0960-01	2732A-3	CR
160-0960-02	D2732A-3	PP
160-0961-00	2732A-3	CR
160-0961-02	D2732A-3	PP
160-0962-00	2716	DL
160-0962-01	2732A-3	CR
160-0962-02	D2732A-3	PP
160-0963-00	2716	DL
160-0963-01	2732A-3	CR
160-0963-02	D2732A-3	PP
160-0964-00	2716	DL
160-0965-00	74S288	PP
160-0966-00	2716	NP
160-0966-01	2716	NP
160-0966-02	2716	NP
160-0966-03	2716834R01	CR
160-0967-00	2716834R01	NP
160-0967-01	2716834R01	DL
160-0967-02	2716834R01	NP
160-0967-03	2716834R01	CR
160-0968-00	2716834R01	CR
160-0969-00	2716	NP
160-0969-01	2716	CR
160-0970-00	2332	DL
160-0970-01	2732A-3	CR
160-0970-02	2732A-3	DL
160-0970-03	D2732A-3	PP
160-0971-00	2332	DL
160-0971-01	2732A-3	CR
160-0971-02	2732A-3	DL
160-0971-03	D2732A-3	DL
160-0972-00	2332	DL
160-0972-01	2732A-3	CR
160-0972-02	D2732A-3	MP
160-0972-03	D2732A-3	PP
160-0973-00	2332	DL
160-0973-01	2732A-3	CR
160-0973-02	D2732A-3	MP
160-0973-03	D2732A-3	PP
160-0974-00	D2732A-3	DL
160-0974-01	D2732A-3	CR
160-0974-02	D2732A-3	PP
160-0975-00	2332	DL
160-0975-01	2732A-3	CR
160-0975-02	D2732A-3	PP
160-0976-00	2332	DL
160-0976-01	2732A-3	CR
160-0976-02	D2732A-3	PP
160-0977-00	2332	DL
160-0977-01	2732A-3	CR
160-0977-02	D2732A-3	PP
160-0978-00	2332	DL
160-0978-01	2732A-3	CR
160-0978-02	D2732A-3	PP
160-0979-00	2332	DL
160-0979-01	2732A-3	CR
160-0979-02	D2732A-3	PP
160-0980-00	2332	DL
160-0980-01	2732A-3	CR
160-0980-02	D2732A-3	PP
160-0981-00	2332	DL
160-0981-01	2732A-3	CR
160-0981-02	D2732A-3	PP
160-0982-00	2332	DL
160-0982-01	2732A-3	CR
160-0982-02	D2732A-3	PP
160-0983-00	2332	DL
160-0983-01	2732A-3	CR
160-0983-02	D2732A-3	PP
160-0984-00	2332	DL
160-0984-01	2732A-3	CR

COPIES OF THESE PROGRAMS CAN BE OBTAINED THROUGH REPROGRAPHICS, EXT. 1658.

PROGRAMMED INTEGRATED CIRCUIT PART NUMBER INDEX

PART NUMBER	MFR'S PART NO.	§§ ST
160-0984-02	D2732A-3	PP
160-0985-00	2332	DL
160-0985-01	2732A-3	CR
160-0985-02	D2732A-3	PP
160-0986-00	2332	DL
160-0986-01	2732A-3	CR
160-0986-02	D2732A-3	PP
160-0987-00	2332	DL
160-0987-01	2732A-3	CR
160-0987-02	D2732A-3	PP
160-0988-00	2332	DL
160-0988-01	2732A-3	CR
160-0988-02	D2732A-3	PP
160-0989-00	2332	DL
160-0989-01	2732A-3	CR
160-0989-02	D2732A-3	PP
160-0990-00	2332	DL
160-0990-01	2732A-3	CR
160-0991-00	2332	DL
160-0991-01	2732A-3	CR
160-0992-00	2332	DL
160-0992-01	2732A-3	CR
160-0992-02	D2732A-3	PP
160-0993-00	2332	DL
160-0993-01	2732A-3	CR
160-0993-02	D2732A-3	PP
160-0994-00	2332	DL
160-0994-01	2732A-3	CR
160-0994-02	D2732A-3	PP
160-0995-00	2332	DL
160-0995-01	2732A-3	CR
160-0995-02	D2732A-3	PP
160-0996-00	2332	DL
160-0996-01	2732A-3	CR
160-0996-02	D2732A-3	PP
160-0997-00	2332	DL
160-0997-01	2732A-3	CR
160-0997-02	D2732A-3	PP
160-0998-00	2332	DL
160-0998-01	2732A-3	CR
160-0998-02	D2732A-3	PP
160-0999-00	2332	DL
160-0999-01	2732A-3	CR
160-0999-02	D2732A-3	PP
160-1000-00	2332	DL
160-1000-01	2732A-3	CR
160-1000-02	D2732A-3	PP
160-1001-00	2332	DL
160-1001-01	2732A-3	CR
160-1001-02	D2732A-3	PP
160-1002-00	2332	DL
160-1002-01	2732A-3	CR
160-1002-02	D2732A-3	PP
160-1003-00	2332	DL
160-1003-01	2732A-3	CR
160-1003-02	D2732A-3	PP
160-1004-00	2332	DL
160-1004-01	2732A-3	NP
160-1004-02	D2732A-3	PP
160-1005-00	2332	DL
160-1005-01	2732A-3	NP
160-1005-02	2732A-3	PP
160-1006-00	2332	DL
160-1006-01	2732A-3	CR
160-1006-02	D2732A-3	PP
160-1007-00	2332	DL
160-1007-01	2732A-3	CR
160-1007-02	D2732A-3	PP
160-1008-00	2332	DL
160-1008-01	2732-3	CR
160-1008-02	D2732A-3	PP
160-1009-00	2332	DL
160-1009-01	2732A-3	CR
160-1009-02	D2732A-3	PP
160-1010-00	2332	DL

PART NUMBER	MFR'S PART NO.	§§ ST
160-1010-01	2732A-3	CR
160-1010-02	D2732A-3	PP
160-1011-00	2332	DL
160-1011-01	2732A-3	CR
160-1011-02	D2732A-3	PP
160-1012-00	2332	DL
160-1012-01	2732A-3	NP
160-1012-02	D2732A-3	CR
160-1012-03	D2732A-3	PP
160-1013-00	2332	DL
160-1013-01	2732A-3	NP
160-1013-03	D2732A-3	PP
160-1014-00	2332	DL
160-1015-00	2332	DL
160-1016-00	2332	DL
160-1017-00	2332	DL
160-1018-00	2332	DL
160-1019-00	2332	DL
160-1020-00	2332	DL
160-1021-00	2332	DL
160-1023-00	INT2732	DL
160-1023-01	2732	NP
160-1023-02	D2732	CR
160-1024-00	2732	NP
160-1025-00	2732	NP
160-1025-01	2732	NP
160-1025-02	2732/834R03	CR
160-1026-00	2716	DL
160-1026-01	2716	CR
160-1027-00	INT2716	NP
160-1027-01	2716	NP
160-1027-02	2732	NP
160-1027-03	2732	NP
160-1028-00	INT2732/834R03	NP
160-1028-01	D2732	CR
160-1029-00	INT2732	DL
160-1030-00	INT2716	NP
160-1030-01	D2732	NP
160-1030-02	2732/834R03/A	NP
160-1030-03	D2732	CR
160-1031-00	INT2716	NP
160-1031-01	2716	NP
160-1031-02	INT2716/834R02	PP
160-1031-03	2732	CR
160-1032-00	INT2716	NP
160-1033-00	INT2732/834R04	CR
160-1034-00	82S2708	DL
160-1035-00	TBP18S42	CR
160-1036-00	27LS18	CR
160-1037-00	2332	PP
160-1038-00	2332	PP
160-1039-00	MK36000N-5	CR
160-1040-00	74S472	CR
160-1041-00	74S472	CR
160-1042-00	74S472	CR
160-1043-00	74S288J	CR
160-1044-00	2716	OT
160-1045-00	2716	OT
160-1046-00		CR
160-1047-00		CR
160-1048-00	82S2708	CM
160-1049-00	82S2708	CM
160-1050-00	MB8532	SC
160-1050-01	MB8532	SC
160-1051-00	MB8532	SC
160-1051-01	MB8532	SC
160-1052-00	MB8532	SC
160-1052-01	MB8532	SC
160-1053-00	MB8532	SC
160-1053-01	MB8532	SC
160-1054-00	MB8532	SC
160-1054-01	MB8532	SC
160-1055-00	MB8532	SC
160-1055-01	MB8532	SC
160-1056-00	2716	CM
160-1057-00	2716	CS

PART NUMBER	MFR'S PART NO.	§§ ST
160-1058-00	SYC2332	DL
160-1059-00	93427	CR
160-1060-00	93427	CR
160-1061-00	93427	CR
160-1062-00	93427	CR
160-1063-00	93427	CR
160-1064-00	93427	CR
160-1065-00	93427	CR
160-1066-00	74S287/82S129	CR
160-1067-00	2716	CM
160-1068-00	2716	CM
160-1069-00	8755A	SC
160-1069-01	8755A	SC
160-1070-00	8755A	SC
160-1070-01	8755A	SC
160-1071-00	8755A	SC
160-1071-01	8755A	SC
160-1072-00	8755A	SC
160-1072-01	8755A	SC
160-1073-00	TPB18SA030	DL
160-1073-01	2716	DL
160-1073-02	D2716-1	CR
160-1074-00	TPB18SA030	DL
160-1074-01	2716	DL
160-1074-02	D2716-1	CR
160-1075-00	IM5610	CR
160-1076-00	SYP2333	PP
160-1076-01	2732	CR
160-1076-02	2732A-3	PP
160-1077-00	MK36000N-5	CR
160-1078-00	MK36000P/J-4	NP
160-1078-01	MK36000N-5	CR
160-1079-00	2716	DL
160-1079-01	2716	CR
160-1080-00	2716	CM
160-1081-00	2732	NP
160-1081-01	2732	CR
160-1082-00	2732	NP
160-1082-01	2732	CR
160-1083-00	2732	NP
160-1083-01	2732	CR
160-1084-00	93427DC	DL
160-1085-00	2716	CM
160-1086-00	2732	DL
160-1086-01	2732	NP
160-1086-02	D2732	CR
160-1087-00	2716	CR
160-1088-00	2708	CM
160-1089-00	5200	OT
160-1090-00	MK36000/J-5	DL
160-1091-00	2732	CR
160-1091-01	2732A-3	PP
160-1092-00	2732	CR
160-1092-01	2732A-3	PP
160-1093-00	2716	CR
160-1093-01	2716	DL
160-1093-02	2716	MP
160-1094-00	2716	CR
160-1094-01	2716	DL
160-1094-02	2716	MP
160-1095-00	2732	CR
160-1096-00	2716	CM
160-1097-00	TMS2716	CM
160-1098-00	TMS2716	CM
160-1099-00	TMS2716	CM
160-1100-00	TMS2716	CM
160-1101-00	2716	CR
160-1102-00	2716	CR
160-1103-00	2716	CR
160-1104-00	2716	CR
160-1105-00	UDP2364D/ SYC2364	DL
160-1106-00	2732	NP
160-1107-00	63S141J	PP
160-1108-00	SYC2332/ MCM68A332	NP

PART NUMBER	MFR'S PART NO.	§§ ST
160-1108-01	D2732/834RDA	NP
160-1108-02	D2732	CR
160-1109-00	2732	NP
160-1109-01	D2732/834RDA	CR
160-1110-00	2732	NP
160-1110-01	D2732/834RDA	CR
160-1111-00	2732	CR
160-1112-00	AM27S29	CR
160-1113-00	AM27S29	CR
160-1114-00	AM27S29	CR
160-1115-00	AM27S29	CR
160-1116-00	IM5610CDE	CR
160-1117-00	MCM68764C/L	CR
160-1118-00	93427	CR
160-1119-00	2716	CM
160-1120-00	6353-1J	CR
160-1121-00	6353-1J	CR
160-1122-00	6353-1J	CR
160-1123-00	6353-1J	CR
160-1124-00	6353-1J	CR
160-1125-00	6353-1J	CR
160-1126-00	2732A-3	NP
160-1126-01	D2732A-3	CS
160-1127-00	2732A-3	NP
160-1127-01	D2732A-3	CS
160-1128-00	2732A-3	CS
160-1129-00	2732A-3	CS
160-1130-00	2732A-3	CS
160-1131-00	2732A-3	CS
160-1132-00	2732A-3	CS
160-1133-00	2732A-3	CS
160-1134-00	2732A-3	NP
160-1134-01	D2732A-3	CS
160-1135-00	2732A-3	DL
160-1135-01	D2732A-3	CS
160-1135-20	2732A	DL
160-1136-00	2732A-3	NP
160-1136-01	D2732A-3	CS
160-1137-00	2732A-3	NP
160-1137-01	D2732A-3	CS
160-1138-00	2732A-3	NP
160-1138-01	D2732A-3	CS
160-1139-00	2732A-3	NP
160-1139-01	D2732A-3	CS
160-1140-00	2732A-3	NP
160-1140-01	D2732A-3	CS
160-1141-00	2732A-3	NP
160-1141-01	D2732A-3	CS
160-1142-00	2732A-3	CS
160-1143-00	2732A-3	CS
160-1144-00	2732A-3	CS
160-1145-00	2732A-3	CS
160-1146-00	2732A-3	CS
160-1147-00	2732A-3	CS
160-1148-00	2732A-3	CS
160-1149-00	2732A-3	CS
160-1150-00	2732A-3	CS
160-1151-00	2732A-3	CS
160-1152-00	2732A-3	NP
160-1152-01	D2732A-3	CS
160-1153-00	2732A-3	NP
160-1153-01	D2732A-3	CS
160-1154-00	2732A-3	NP
160-1154-01	D2732A-3	CS
160-1155-00	2732A-3	NP
160-1155-01	D2732A-3	CS
160-1156-00	2732A-3	CS
160-1157-00	2732A-3	CS
160-1158-00	2732	CR
160-1159-00	2732/834R06	CR
160-1160-00	2732	CR
160-1161-00	2732	DL
160-1162-00	D2764-3	PP
160-1163-00	D2764-3	PP
160-1164-00	D2764-3	PP

COPIES OF THESE PROGRAMS CAN BE OBTAINED THROUGH REPROGRAPHICS, EXT. 1658.

PROGRAMMED INTEGRATED CIRCUIT PART NUMBER INDEX

4

PART NUMBER	MFR'S PART NO.	§§ ST
160-1165-00	D2764-3	PP
160-1166-00	93427DC	CR
160-1167-00	93427DC	CR
160-1168-00	82LS181	OT
160-1169-00	AM27S29	CR
160-1169-01	AM27S29	DL
160-1170-00	82S107	CM
160-1171-00	6349-1J	CR
160-1172-00	93427/82S129/ 6301	CR
160-1173-00	93424/82S129/ 6301	CR
160-1174-00	2708	CR
160-1175-00	2708	CR
160-1176-00	2732	NP
160-1176-01	2732/834RDA	NP
160-1176-02	D2732	NP
160-1176-03	D2732	CR
160-1176-04	D2732	MP
160-1177-00	2732/834R08	DL
160-1178-00	2732/834R09	DL
160-1179-00	SYP2333	DL
160-1180-00	SYP2333	DL
160-1181-00	SYP2333	DL
160-1182-00	SYP2333	DL
160-1183-00	R6531P	CR
160-1184-00	2333	DL
160-1185-00	2333	DL
160-1186-00	2333	DL
160-1187-00	2333	DL
160-1188-00	2716	CR
160-1189-00	2716	PP
160-1190-00	2716	CR
160-1191-00	82S2708/82S181 /82LS181	CM
160-1192-00	5200	CM
160-1193-00	8741A	CM
160-1194-00	8741A	DL
160-1195-00	N82S1071	DL
160-1196-00	N82S1071	DL
160-1197-00	N82S1071	DL
160-1198-00	N82S1071	DL
160-1199-00	2716	PP
160-1200-00	2716	PP
160-1201-00	2716	CM
160-1202-00	2716	CM
160-1203-00	2716	CM
160-1204-00	2716	CM
160-1205-00	74S288	CR
160-1206-00	2732	CM
160-1207-00	2732A-3	NP
160-1207-01	D2732A-3	PP
160-1207-02	D2732A-3	CS
160-1208-00	2732A-3	CS
160-1209-00	2732A-3	CS
160-1210-00	2732A-3	CS
160-1211-00	2732A-3	NP
160-1211-01	2732A-3	PP
160-1211-02	D2732A-3	PP
160-1212-00	2732A-3	CS
160-1213-00	2732A-3	CS
160-1214-00	2732A-3	CS
160-1215-00	IM5610	CR
160-1216-00	27S191ADC	CR
160-1217-00	27S191ADC	PP
160-1218-00	82S191	DL
160-1219-00	82S191	DL
160-1220-00	82S191	DL
160-1221-00	82S191	DL
160-1222-00	74S288	DL
160-1223-00	82S191	DL
160-1224-00	82S191	DL
160-1225-00	82S191	DL
160-1226-00	82S191	DL
160-1227-00	82S191	DL

PART NUMBER	MFR'S PART NO.	§§ ST
160-1228-00	82S191	DL
160-1229-00	82S191	DL
160-1230-00	82S191	DL
160-1231-00	82S191	DL
160-1232-00	82S191	DL
160-1233-00	82S191	DL
160-1234-00	82S191	DL
160-1235-00	74S288	DL
160-1236-00	74S288	DL
160-1237-00	74S288	DL
160-1238-00	74S288	DL
160-1239-00	74S288	DL
160-1240-00	74S288	CR
160-1241-00	2716	NP
160-1241-01	MK36000N-5	CR
160-1242-00	AM2732-IDC	PP
160-1243-00	AM2732-IDC	PP
160-1244-00	2716	CR
160-1245-00	2716	NP
160-1245-01	MK36000N-5	CR
160-1246-00	68766C35	PP
160-1246-01	MK36000N-5	CR
160-1247-00	68766C35	PP
160-1247-01	MK36000N-5	CR
160-1248-00	68766C35	NP
160-1248-01	MK36000N-5	CR
160-1249-00	68766C35	NP
160-1249-01	MK36000N-5	CR
160-1250-00	68766C35	NP
160-1250-01	MK36000N-5	CR
160-1251-00	68766C35	NP
160-1251-01	MK36000N-5	CR
160-1252-00	68766C35	NP
160-1252-01	MK36000N-5	CR
160-1253-00	68766C35	NP
160-1253-01	MK36000N-5	CR
160-1254-00	68766C35	NP
160-1254-01	MK36000N-5	CR
160-1255-00	68766C35	NP
160-1255-01	MK36000N-5	CR
160-1256-00	68766C35	NP
160-1256-01	MK36000N-5	CR
160-1257-00	68766C35	NP
160-1257-01	MK36000N-5	CR
160-1258-00	2732	CM
160-1259-00	MK36000P-4	PP
160-1260-00	MK36000P-4	PP
160-1261-00	MK36000P-4	PP
160-1262-00	MK36000P-4	PP
160-1263-00	MK36000P-4	PP
160-1264-00	MK36000P-4	PP
160-1265-00	MK36000P-4	PP
160-1266-00	MK36000P-4	PP
160-1267-00	MK36000P-4	PP
160-1268-00	MK36000P-4	PP
160-1269-00	MK36000P-4	PP
160-1270-00	MK36000P-4	PP
160-1271-00	MK36000P-4	PP
160-1272-00	MK36000P-4	PP
160-1273-00	MK36000P-4	PP
160-1274-00	MK36000P-4	PP
160-1275-00	MK36000P-4	PP
160-1276-00	MK36000P-4	PP
160-1277-00	MK36000P-4	PP
160-1278-00	MK36000P-4	PP
160-1279-00	MK36000P-4	PP
160-1280-00	MK36000P-4	PP
160-1281-00	MK36000P-4	PP
160-1282-00	MK36000P-4	PP
160-1283-00	MK36000P-4	PP
160-1284-00	MK36000P-4	PP
160-1285-00	MK36000P-4	PP
160-1286-00	MK36000P-4	PP
160-1287-00	MK36000P-4	PP
160-1288-00	MK36000P-4	PP

PART NUMBER	MFR'S PART NO.	§§ ST
160-1289-00	MK36000P-4	PP
160-1290-00	MK36000P-4	PP
160-1291-00	MK36000P-4	PP
160-1292-00	MK36000P-4	PP
160-1293-00	MK36000P-4	PP
160-1294-00	MK36000P-4	PP
160-1295-00	MK36000P-4	PP
160-1296-00	MK36000P-4	PP
160-1297-00	MK36000P-4	PP
160-1298-00	MK36000P-4	PP
160-1299-00	MK36000P-4	PP
160-1300-00	MK36000P-4	PP
160-1301-00	MK36000P-4	PP
160-1302-00	MK36000P-4	PP
160-1303-00	MK36000P-4	PP
160-1304-00	MK36000P-4	PP
160-1305-00	MK36000P-4	PP
160-1306-00	MK36000P-4	PP
160-1307-00	82S107	CR
160-1308-00	82LS181	CR
160-1309-00		CR
160-1310-00	82LS181	CR
160-1311-00	82LS181	CR
160-1312-00	82LS181	CR
160-1313-00	2732A-3	CR
160-1314-00	2732A-3	CR
160-1315-00	2732A-3	CR
160-1316-00	2732A-3	CR
160-1317-00	2732	NP
160-1317-01	2732/834R07	CR
160-1318-00	MK36000P-4	PP
160-1319-00	MK36000P-4	PP
160-1320-00	MK36000P-4	PP
160-1321-00	MK36000P-4	PP
160-1322-00	MK36000P-4	PP
160-1323-00	MK36000P-4	PP
160-1324-00	MK36000P-4	PP
160-1325-00	MK36000P-4	PP
160-1326-00	2732	CR
160-1327-00	2732	CR
160-1328-00	2732	CR
160-1329-00	2732	CR
160-1330-00	2732	PP
160-1330-01	2732	PP
160-1331-00	2732	CR
160-1332-00	2732	CR
160-1333-00	2732	CR
160-1334-00	2732	CR
160-1335-00	68766C35	PP
160-1335-01	MK36000N-5	CR
160-1336-00	68766C35	PP
160-1336-01	MK36000N-5	CR
160-1337-00	2732A-3	CR
160-1338-00	2732A-3	CR
160-1339-00	2732A-3	CR
160-1340-00	2732A-3	CR
160-1341-00	MCM68B364	DL
160-1342-00	2716	CR
160-1343-00	2732	CR
160-1344-00	2716	PP
160-1345-00	2716	PP
160-1346-00	18S42	CR
160-1347-00	D2732A-3	NP
160-1347-01	D2732A-3	CR
160-1348-00	D2732A-3	CR
160-1349-00	2732A-3	NP
160-1349-01	D2732A-3	CR
160-1350-00	D2732A-3	NP
160-1350-01	D2732A-3	CR
160-1351-00	2732	CR
160-1352-00	2716-1	NP
160-1352-01	2732A	CR
160-1353-00	D2764-3	CR
160-1354-00	D2764-3	CR
160-1355-00	D2764-3	CR

PART NUMBER	MFR'S PART NO.	§§ ST
160-1356-00	D2764-3	CR
160-1357-00	D2764-3	CR
160-1358-00	D2764-3	CR
160-1359-00	D2764-3	CR
160-1360-00	D2764-3	CR
160-1361-00	D2764-3	CR
160-1362-00	D2764-3	CR
160-1363-00	D2764-3	CR
160-1364-00	D2764-3	CR
160-1365-00	D2764-3	CR
160-1366-00	D2764-3	CR
160-1367-00	D2764-3	CR
160-1368-00	D2764-3	CR
160-1369-00	D2764-3	CR
160-1370-00	D2764-3	CR
160-1371-00	D2764-3	CR
160-1372-00	D2764-3	CR
160-1373-00	D2764-3	CR
160-1374-00	D2764-3	CR
160-1375-00	D2764-3	CR
160-1376-00	D2764-3	CR
160-1377-00	D2764-3	DL
160-1378-00	D2764-3	CR
160-1379-00	D2764-3	CR
160-1380-00	D2764-3	CR
160-1381-00	D2764-3	CR
160-1382-00	D2764-3	CR
160-1383-00	D2764-3	CR
160-1384-00	D2764-3	CR
160-1385-00	D2764-3	CR
160-1386-00	D2764-3	CR
160-1387-00	D2764-3	PP
160-1388-00	D2764-3	CR
160-1389-00	D2764-3	CR
160-1390-00	D2764-3	CR
160-1391-00	D2764-3	CR
160-1392-00	D2764-3	CR
160-1393-00	D2764-3	CR
160-1394-00	D2764-3	DL
160-1395-00	D2764-3	CR
160-1396-00	D2764-3	CR
160-1397-00	D2764-3	CR
160-1398-00	D2764-3	CR
160-1399-00	D2764-3	CR
160-1400-00	D2764-3	CR
160-1401-00	D2764-3	CR
160-1401-01	2764-3	MP
160-1402-00	2732	CR
160-1403-00	2732	CR
160-1404-00	2732	CR
160-1405-00	2716	CR
160-1406-00	2764-3	NP
160-1406-01	2764-3	CR
160-1407-00	2764-3	NP
160-1407-01	2764-3	CR
160-1408-00	32732A-3	NP
160-1408-01	2732A-3	CR
160-1409-00	2764-3	DL
160-1410-00	2764-3	CR
160-1410-01	2764-3	MP
160-1411-00	2764-3	CR
160-1411-01	2764-3	MP
160-1412-00	2716	CR
160-1413-00	2716	CR
160-1414-00	D2732A-3	CR
160-1415-00	D2732A-3	CR
160-1416-00	D2732A-3	CR
160-1417-00	D2732A-3	CR
160-1418-00	D2732A-3	CR
160-1419-00	D2732A-3	CR
160-1419-01	D2732A	MP
160-1420-00	D2732A-3	CR
160-1420-01	D2732A	MP
160-1421-00	D2732A-3	CR
160-1422-00	2716	DL
160-1423-00	MK36000P-4	PP

COPIES OF THESE PROGRAMS CAN BE OBTAINED THROUGH REPROGRAPHICS, EXT. 1658.

PROGRAMMED INTEGRATED CIRCUIT PART NUMBER INDEX

PART NUMBER	MFR'S PART NO.	§§ ST
160-1424-00	MK36000P-4	PP
160-1425-00	MK36000P-4	PP
160-1426-00	MK36000P-4	PP
160-1427-00	MK36000P-4	PP
160-1428-00	MK36000P-4	PP
160-1429-00	MK36000P-4	PP
160-1430-00	MK36000P-4	PP
160-1431-00	MK36000P-4	PP
160-1432-00	82S181	PP
160-1433-00	MK36000P-4	PP
160-1434-00	MK36000P-4	PP
160-1435-00	MK36000P-4	PP
160-1436-00	MK36000P-4	PP
160-1437-00	MK36000P-4	PP
160-1438-00	MK36000P-4	PP
160-1439-00	MK36000P-4	PP
160-1440-00	MK36000P-4	PP
160-1441-00	MK36000P-4	PP
160-1442-00	MK36000P-4	PP
160-1444-00	2716	CR
160-1445-00	2716	CR
160-1446-00	2716	CR
160-1447-00	2716	CR
160-1448-00	2732A-3	CR
160-1449-00	2732A-3	CR
160-1450-00	2732A-3	CR
160-1451-00	2732A-3	CR
160-1452-00	2732A-3	CR
160-1453-00	2732A-3	CR
160-1454-00	2732A-3	CR
160-1455-00	2732A-3	DL
160-1456-00	2732A-3	DL
160-1457-00	2732A-3	CR
160-1458-00	2764-3	CR
160-1459-00	2764-3	CR
160-1460-00	2764-3	CR
160-1461-00	2764-3	CR
160-1462-00	2764-3	CR
160-1463-00	2764-3	CR
160-1464-00	2764-3	NP
160-1465-00	2764-3	CR
160-1466-00	2764-3	CR
160-1467-00	2764-3	CR
160-1468-00	2764-3	CR
160-1469-00	2764-3	CR
160-1470-00	2764-3	CR
160-1471-00	2764-3	CR
160-1472-00	2764-3	CR
160-1473-00	2764-3	CR
160-1474-00	16R8	PP
160-1475-00	2764-3	PP
160-1475-01	D2764-4	PP
160-1476-00	5610CDE	CR
160-1477-00	8755A	CR
160-1478-00	2716	PP
160-1479-00	2716	CR
160-1479-01	2716	MP
160-1480-00	2716	CR
160-1481-00	2716	NP
160-1481-01	B2716	CR
160-1482-00	2716	CR
160-1483-00	2732A-3	CR
160-1484-00	2732A-3	NP
160-1484-01	D2732A-3	CR
160-1485-00	2716	PP
160-1486-00	D2764-3	CR
160-1487-00	D2764-3	CR
160-1488-00	D2732A	CR
160-1489-00	D2732A	CR
160-1490-00	D2732A	CR
160-1491-00	D2732A	CR
160-1492-00	D2732A	CR
160-1493-00	D2732A	CR
160-1494-00	D2732A	CR
160-1495-00	D2732A	CR

PART NUMBER	MFR'S PART NO.	§§ ST
160-1496-00	D2732A	CR
160-1497-00	D2732A	CR
160-1498-00	D2732A	CR
160-1499-00	D2732A	CR
160-1500-00	D2732A	CR
160-1501-00	D2732A	CR
160-1502-00	D2732A	CR
160-1503-00	D2732A	CR
160-1504-00	D2732A	CR
160-1505-00	D2732A	CR
160-1506-00	D2732A	CR
160-1506-01	D2732A	MP
160-1507-00	D2732A	CR
160-1508-00	D2732A	CR
160-1508-01	D2732A	MP
160-1509-00	MCM68764	CR
160-1510-00	MCM68764	DL
160-1511-00	D2732A	CR
160-1512-00	2716	CR
160-1513-00	2716	CR
160-1514-00	2716	CR
160-1515-00	D2732A-3	PP
160-1516-00	D2732A-3	PP
160-1517-00	2732A-3	CR
160-1518-00	2732A-3	CR
160-1519-00	2716	CM
160-1520-00	2716	CM
160-1521-00	N82S185F	NP
160-1521-01	N82S191	CR
160-1522-00	N82LS181	CR
160-1523-00	AMD27S29	PP
160-1524-00	N83LS181	CR
160-1525-00	68764	NP
160-1525-01	MCM67764C/L	PP
160-1526-00	D2732A	CR
160-1529-00	2732A	PP
160-1530-00	2732A	PP
160-1531-00	2732A	PP
160-1532-00	2732A	PP
160-1533-00	2732A-3	CR
160-1534-00	2732A-3	CR
160-1535-00	2732A-3	CR
160-1535-01	D2732A-3	PP
160-1536-00	2732A-3	CR
160-1536-01	D2732A-3	PP
160-1537-00	2732A-3	CR
160-1537-01	D2732A-3	PP
160-1538-00	2732A-3	CR
160-1538-01	D2732A-3	PP
160-1539-00	2732A-3	CR
160-1539-01	D2732A-3	PP
160-1540-00	2732A-3	CR
160-1540-01	D2732A-3	PP
160-1541-00	2732A-3	CR
160-1541-01	D2732A-3	PP
160-1542-00	2732A-3	CR
160-1542-01	D2732A-3	PP
160-1543-00	2732A-3	CR
160-1543-01	D2732A-3	PP
160-1544-00	2732A-3	CR
160-1544-01	D2732A-3	PP
160-1545-00	2732A-3	PP
160-1546-00	2732A-3	PP
160-1547-00	2732A-3	PP
160-1548-00	2732A-3	PP
160-1549-00	2732A-3	CR
160-1549-01	2732A-3	DL
160-1549-02	2732A-3	CR
160-1549-03	D2732A-3	PP
160-1550-00	2732A	CR
160-1550-01	2732A-3	DL
160-1550-02	2732A-3	CR
160-1550-03	D2732A-3	PP
160-1551-00	2732A	NP
160-1551-01	2732A	NP

PART NUMBER	MFR'S PART NO.	§§ ST
160-1551-02	D2732A	CM
160-1552-00	2732A	NP
160-1552-01	2732A	NP
160-1552-02	D2732A	CM
160-1553-00	2732A	NP
160-1553-01	2732A	NP
160-1553-02	D2732A	CM
160-1554-00	2732A	NP
160-1554-01	2732A	NP
160-1554-02	D2732A	CM
160-1555-00	2732A	NP
160-1555-01	2732A	NP
160-1555-02	D2732A	CM
160-1555-03	D2732A	CM
160-1556-00	2732A	NP
160-1556-01	2732A	NP
160-1556-02	D2732A	NP
160-1556-03	2732A	CM
160-1557-00	2732A	NP
160-1557-01	2732A	NP
160-1557-02	D2732A	CM
160-1558-00	2732A	NP
160-1558-01	2732A	NP
160-1558-02	2732A	CM
160-1559-00	2732A	NP
160-1559-01	D2732A	CM
160-1560-00	2732A	NP
160-1560-01	D2732A	CM
160-1560-02	2732	CM
160-1561-00	2732A	NP
160-1561-01	D2732A	CM
160-1562-00	2732A	NP
160-1562-01	D2732A	CM
160-1562-02	D2732A	CM
160-1562-03	2732A	CM
160-1563-00	2732A	NP
160-1563-01	D2732A	NP
160-1563-02	D2732A	CM
160-1564-00	2732A	NP
160-1564-01	D2732A	CM
160-1565-00	2732A	NP
160-1565-01	D2732A	CM
160-1566-00	2716	CR
160-1567-00	2732A	CM
160-1568-00	2732A	CM
160-1569-00	2764	PP
160-1570-00	2764	PP
160-1571-00	2764	PP
160-1572-00	2764	PP
160-1573-00	2764	PP
160-1574-00	2732A	PP
160-1575-00	27128-3	PP
160-1576-00	27128-3	PP
160-1577-00	27128-3	PP
160-1578-00	27128-3	PP
160-1579-00	27128-3	PP
160-1580-00	27128-3	PP
160-1581-00	27128-3	PP
160-1582-00	27128-3	PP
160-1583-00	2716	PP
160-1584-00	2732/834R11	CR
160-1585-00	2732/834R11	CR
160-1586-00	2716	DL
160-1587-00	2716	DL
160-1588-00	2732/834R10	CR
160-1589-00	2732/834R10	CR
160-1590-00	2732/834R02A	NP
160-1590-01	D2732	CR
160-1591-00	2732/834R02A	CR
160-1592-00	2732/834R02A	CR
160-1593-00	2732	DL
160-1594-00	2732A	CM
160-1594-01	D2732A	CM
160-1595-00	2732A	CM
160-1596-00	2732A	CM
160-1597-00	74S288J	PP

PART NUMBER	MFR'S PART NO.	§§ ST
160-1598-00	2732A	PP
160-1599-00	2732ARGB, TST	PP
160-1600-00	2732ADMT	PP
160-1601-00	2732AGMT	PP
160-1602-00	2732AODT, GPIB	PP
160-1603-00	2732A	PP
160-1604-00	2732A	PP
160-1605-00	2732A	PP
160-1606-00	2764-3	CR
160-1607-00	2764-3	CR
160-1608-00	2764-3	PP
160-1609-00	2764-3	CR
160-1610-00	2764-3	PP
160-1611-00	2764-3	CR
160-1612-00	2716	CR
160-1612-01	2716	MP
160-1613-00	2716	PP
160-1614-00	2716	DL
160-1615-00	2716	PP
160-1616-00	2716	DL
160-1617-00	2732A	CM
160-1618-00	2732A	CM
160-1619-00	2732A	CM
160-1620-00	2708	CS
160-1621-00	68766C35	CR
160-1622-00	2716	CR
160-1623-00	2732	CM
160-1624-00	2732	CM
160-1625-00	2764-4	PP
160-1625-01	2764-4	PP
160-1626-00	2764-4	PP
160-1626-01	2764-4	PP
160-1627-00	2764-4	PP
160-1627-01	2764-4	PP
160-1628-00	2732	PP
160-1628-01	D2732	PP
160-1629-00	2732A-3	CM
160-1629-01	D2732A	CM
160-1630-00	2732A	CM
160-1631-00	D2732	PP
160-1631-01	D2732	PP
160-1632-00	D2732A	CM
160-1633-00	D2732A	CM
160-1634-00	D2732A	CM
160-1635-00	D2732A	CM
160-1636-00	D2732A-3	CR
160-1637-00	D2732A-3	CR
160-1638-00	D2732A-3	CR
160-1639-00	D2732A-3	CR
160-1640-00	D2732A-3	CR
160-1641-00	D2732A-3	CR
160-1642-00	D2732A-3	CR
160-1643-00	D2732A-3	CR
160-1644-00	D2732A-3	CR
160-1645-00	D2732A-3	CR
160-1646-00	D2732A-3	CR
160-1647-00	D2732A-3	CR
160-1648-00	D2732A-3	CR
160-1649-00	D2732A-3	CR
160-1650-00	S2732A-3	CR
160-1651-00	D2732A-3	CR
160-1652-00	D2732A-3	CR
160-1653-00	D2732A-3	CR
160-1654-00	D2732A-3	CR
160-1655-00	D2732A-3	CR
160-1656-00	D2732A-3	CR
160-1657-00	D2732A-3	CR
160-1658-00	D2732A-3	CR
160-1659-00	D2732A-3	CR
160-1660-00	D2732A-3	PP
160-1661-00	D2732A-3	PP
160-1662-00	D2732A-3	PP
160-1663-00	D2732A-3	PP
160-1664-00	D2732A-3	PP
160-1665-00	D2732A-3	PP
160-1666-00	2716	PP

COPIES OF THESE PROGRAMS CAN BE OBTAINED THROUGH REPROGRAPHICS, EXT. 1658.

PROGRAMMED INTEGRATED CIRCUIT PART NUMBER INDEX

4

PART NUMBER	MFR'S PART NO.	§§ ST
160-1667-00	2716	PP
160-1668-00	D2716A-3	PP
160-1669-00	D2732A-3	PP
160-1670-00	D2732A-3	PP
160-1671-00	D2732A-3	PP
160-1672-00	D2732A	PP
160-1673-00	D2732A	PP
160-1674-00	HN462532	SC
160-1675-00	IMS610CPE	SC
160-1676-00	D2764-3	PP
160-1677-00	D2732A	PP
160-1678-00	D2732A	PP
160-1679-00	MCM68764C/L	NP
160-1679-01	MCM68764C/L	CR
160-1679-02	68764C/L	CR
160-1680-00	D2732A-3	CR
160-1681-00	D2764-3	PP
160-1682-00	D2764	PP
160-1683-00	D2764	PP
160-1684-00	D2764	PP
160-1685-00	D2764	PP
160-1686-00	N82S191	PP
160-1687-00	N82S191	PP
160-1688-00	N82S191	PP
160-1689-00	N82S191	PP
160-1690-00	DM74S288J	PP
160-1691-00	D2764	PP
160-1692-00	D27364-4	PP
160-1693-00	N82S191	PP
160-1694-00	N82S191	PP
160-1695-00	N82S191	PP
160-1696-00	D2764	PP
160-1697-00	D2764	PP
160-1698-00	D2764	PP
160-1699-00	D2764	PP
160-1700-00	D2764	PP
160-1701-00	D2764	PP
160-1702-00	D2764	PP
160-1703-00	D2732A	MP
160-1704-00	D2764	MP
160-1705-00	D2764	MP
160-1706-00	D2732A	CM
160-1707-00	D2732A-3/ D2732A	CM
160-1708-00	D2732A-3	CM
160-1709-00	B2716	PP
160-1710-00	D2764-3	PP
160-1711-00	D2764-3	PP
160-1712-00	D2716-1	PP
160-1713-00	82S107	PP
160-1714-00	PAL16R6	PP
160-1715-00	D2764	PP
160-1716-00	D2732A	CM
160-1717-00	D2732A	CM
160-1718-00	D2732A	CM
160-1719-00	LM10CN	CM
160-1720-00	D2732A-3	PP
160-1721-00	D2732A-3	PP
160-1722-00	MCM10149	PP
160-1723-00	MCM10149	PP
160-1724-00	74S288	PP
160-1725-00	72S288	PP
160-1726-00	D2732A-3	PP
160-1727-00	D2732A-3	PP
160-1728-00	D2732A	PP
160-1729-00	27S291	PP
160-1730-00	27S291	PP
160-1731-00	93427	PP
160-1732-00	93427	PP
160-1733-00	93427	PP
160-1734-00	2764-3	PP
160-1735-00	2764-3	PP
160-1736-00	2764-3	PP
160-1737-00	2764-3	PP
160-1738-00	12L6	PP

PART NUMBER	MFR'S PART NO.	§§ ST
160-1739-00	14L4	PP
160-1740-00	12L6	PP
160-1741-00	12L6	PP
160-1742-00	12L6	PP
160-1743-00	12L6	PP
160-1744-00	14L4	PP
160-1745-00	16R8	PP
160-1746-00	16R6	PP
160-1747-00	16R8	PP
160-1748-00	MCA600	PP
160-1749-00	2732A	CM
160-1749-01	2732A	PP
160-1750-00	2732A	CM
160-1751-00	2732A	CM
160-1752-00	2732A	CM
160-1753-00	2732A	CM
160-1754-00	2732A	CM
160-1755-00	MCM68766C35	PP
160-1756-00	MCM68766C35	PP
160-1757-00	D2732-3	PP
160-1758-00	2732A-3	PP
160-1759-00	2732A-3	PP
160-1760-00	2732A-3	PP
160-1761-00	2732A-3	PP
160-1762-00	2732A-3	PP
160-1763-00	2732A-3	PP
160-1764-00	82S100	PP
160-1765-00	82S100	PP
160-1766-00	2732A-3	PP
160-1767-00	2732A-3	PP
160-1768-00	2732A-3	PP
160-1769-00	2732A-3	PP
160-1770-00	2732A-3	PP
160-1771-00	2732A-3	PP
160-1772-00	2732A-3	PP
160-1773-00	2732A-3	PP
160-1774-00	2732A-3	PP
160-1775-00	2732A-3	PP
160-1776-00	2732A-3	PP
160-1777-00	2732A-3	PP
160-1778-00	2732A-3	PP
160-1779-00	2732A-3	PP
160-1780-00	2732A-3	PP
160-1781-00	2732A-3	PP
160-1782-00	2732A-3	PP
160-1783-00	2732A-3	PP
160-1784-00	2732A-3	PP
160-1785-00	2732A-3	PP
160-1786-00	2732A-3	PP
160-1787-00	2732A-3	PP
160-1788-00	2732A-3	PP
160-1789-00	2732A-3	PP
160-1790-00	2732A-3	PP
160-1791-00	2732A-3	PP
160-1792-00	2732A-3	PP
160-1793-00	2732A-3	PP
160-1794-00	2732A-3	PP
160-1795-00	2732A-3	PP
160-1796-00	2732A-3	PP
160-1797-00	2732A-3	PP
160-1798-00	2716	PP
160-1799-00	2716	PP
160-1800-00	2716	PP
160-1801-00	2716	PP
160-1802-00	D2764-4	PP
160-1803-00	D2764-4	PP
160-1804-00	D2764-4	PP
160-1805-00	D2732A	CM
160-1806-00	82S185F	PP
160-1807-00	74S288J	PP
160-1808-00	2716	PP
160-1809-00	2764	PP
160-1810-00	2716	PP
160-1811-00	2716	PP
160-1812-00	2716	PP
160-1813-00	27S291DC	PP

PART NUMBER	MFR'S PART NO.	§§ ST
160-1814-00	27S291DC	PP
160-1815-00	27S291DC	PP
160-1816-00	93427DC	PP
160-1817-00	10139L	PP
160-1818-00	MCM6876635C/L	PP
160-1819-00	MCM6876635C/L	PP
160-1820-00	D2764-3	PP
160-1821-00	D2764-3	PP
160-1822-00	2764-3	PP
160-1823-00	2764-3	PP
160-1824-00	2764-3	PP
160-1825-00	2764-3	PP
160-1826-00	16R6	DL
160-1827-00	16R6	DL
160-1828-00	16R4	PP
160-1829-00	16R4	PP
160-1830-00	16R8	PP
160-1831-00	2716	CR
160-1832-00	D2732A	PP
160-1833-00	2732	PP
160-1834-00	N82S2708E	CM
160-1835-00	2716	PP
160-1836-00	2716	PP
160-1837-00	2716	PP
160-1838-00	82S100	PP
160-1839-00	74S288J	PP
160-1840-00	2716	PP
160-1841-00	68764C/L	CR
160-1842-00	2716	CR
160-1843-00	2732A-3	PP
160-1844-00	2732A-3	PP
160-1845-00	2764-3	PP
160-1846-00	2716	PP
160-1847-00	D2764-3	DL
160-1848-00	2732A	CM
160-1849-00	2732A	CM
160-1850-00	2732A	CM
160-1851-00	2732A	CM
160-1852-00	2732A	CM
160-1853-00	2732A	CM
160-1854-00	2732A	CM
160-1855-00	2732A	CM
160-1856-00	2732A	CM
160-1857-00	2732A	CM
160-1858-00	2732A	CM
160-1859-00	2732A	CM
160-1860-00	2732A	CM
160-1861-00	2732A	CM
160-1862-00	2732A	CM
160-1863-00	2732A	CM
160-1864-00	2732A	CM
160-1865-00	2732A	CM
160-1866-00	2732A	CM
160-1867-00	2732A	CM
160-1868-00	2732A	CM
160-1869-00	8755A	PP
160-1870-00	2732	CM
160-1871-00	2732	CM
160-1872-00	74S288J	MP
160-1873-00	2764	PP
160-1874-00	D2732A-3	PP
160-1875-00	D2732A-3	PP
160-1876-00	D2732A-3	PP
160-1877-00	D2732A-3	PP
160-1878-00	D2732A-3	PP
160-1879-00	D2732A-3	PP
160-1880-00	D2732A-3	PP
160-1881-00	D2732A-3	PP
160-1882-00	D2732A-3	PP
160-1883-00	D2732A-3	PP
160-1884-00	D2732A-3	PP
160-1885-00	D2732A-3	PP
160-1886-00	D2732A-3	PP
160-1887-00	D2732A-3	PP
160-1888-00	2764	PP

PART NUMBER	MFR'S PART NO.	§§ ST
160-1889-00	68-76-35C/L	PP
160-1890-00	MCM6876635C/L	PP
160-1891-00	HN613128P	SC
160-1892-00	HN613128P	SC
160-1893-00	HN613128P	SC
160-1894-00	HN613128P	SC
160-1895-00	HN613128P	SC
160-1896-00	HN613128P	SC
160-1897-00	MBM2764-25Z-G	SC
160-1898-00	HN46332P	SC
160-1899-00	2732	MP
160-1900-00	2732	MP
160-1901-00	2732	MP
160-1902-00	D27128	PP
160-1903-00	2732A-3	PP
160-1904-00	27128-3	PP
160-1905-00	27128-3	PP
160-1906-00	27128-3	PP
160-1907-00	27128-3	PP
160-1908-00	27128-3	PP
160-1909-00	27128-3	PP
160-1910-00	D2764-3	MP
160-1911-00	D2764-3	MP
160-1912-00	D2764-3	MP
160-1913-00	D27128-3	PP
160-1914-00	D27128-3	PP
160-1915-00	27128-3	PP
160-1916-00	27128-3	PP
160-1917-00	MCA600	PP
160-1918-00	2732A	PP
160-1919-00	2732A	PP
160-1920-00	2732A	PP
160-1921-00	2732A	PP
160-1922-00	2732A	PP
160-1923-00	2732A	PP
160-1924-00	2732A	PP
160-1925-00	2732A	PP
160-1926-00	2732A	PP
160-1927-00	2732A	PP
160-1928-00	2732A	PP
160-1929-00	2732A	PP
160-1930-00	2732A	PP
160-1931-00	2732A	PP
160-1932-00	2732A	PP
160-1933-00	2732A	PP
160-1934-00	2732A	PP
160-1935-00	2732A	PP
160-1936-00	2732A	PP
160-1937-00	2732A	PP
160-1938-00	2732A	PP
160-1939-00	2732A	PP
160-1940-00	2732A	PP
160-1941-00	2732A	PP
160-1942-00	2732A	PP
160-1943-00	2732A	PP
160-1944-00	2732A	PP
160-1945-00	2708	CM
160-1946-00	2716	CM
160-1947-00	2716	CM
160-1948-00	2716	CM
160-1949-00	2708	CM
160-1950-00	2716	CM
160-1951-00	PAL16L2	PP
160-1952-00	PAL10L8	PP
160-1953-00	PAL12L10	PP
160-1954-00	PAL16L8	PP
160-1955-00	PAL16R8	PP
160-1956-00	PAL16R8	PP
160-1957-00	PAL16R8	PP
160-1958-00	PAL16R8	PP
160-1959-00	2764	PP
160-1960-00	2764	PP
160-1961-00	2764	PP
160-1962-00	D2764-3	PP

COPIES OF THESE PROGRAMS CAN BE OBTAINED THROUGH REPROGRAPHICS, EXT. 1658.

TEK MADE INTEGRATED CIRCUIT PART NUMBER INDEX

PART NUMBER	TYPE	STATUS§§	PAGE NO
155-0004-01	Readout System	CR	3-6
155-0005-00	Readout System	CR	3-6
155-0006-01	Readout System	CR	3-6
155-0007-01	Readout System	CR	3-6
155-0008-01	Readout System	CR	3-6
155-0009-00	Main Frame Logic	CR	3-6
155-0010-00	Main Frame Logic	CR	3-6
155-0011-00	Main Frame Logic	CR	3-6
155-0012-00	Main Frame Logic	CR	3-6
155-0013-00	Main Frame Logic	CR	3-6
155-0014-01	Knob Readout System	CR	3-6
155-0015-01	Knob Readout System	CR	3-6
155-0017-00	Knob Readout System	CR	3-6
155-0018-00	Knob Readout System	CR	3-6
155-0019-00	Knob Readout System	CR	3-6
155-0020-00	Knob Readout System	CR	3-6
155-0021-01	Knob Readout System	CR	3-6
155-0022-00	General Circuit	CR	3-6
155-0022-01	General Circuit	CS	3-6
155-0023-00	Knob Readout System	CR	3-6
155-0024-00	Knob Readout System	CR	3-6
155-0025-00	Knob Readout System	CR	3-6
155-0026-00	Knob Readout System	CR	3-6
155-0027-00	Knob Readout System	CR	3-6
155-0028-00	Horizontal System	CR	3-7
155-0028-01	Horizontal System	DL	3-6
155-0031-01	General Circuit	CS	3-6
155-0032-00	Vertical Amplifier	NP	
155-0032-01	Vertical Amplifier	NP	
155-0033-00	Probe Control Circuit	OB	
155-0034-00	General Circuit	OB	
155-0035-00	Operational Amplifier	CR	3-6
155-0038-01	AD/DA Circuit	CR	3-6
155-0038-02	AD/DA Circuit	OT	3-6
155-0047-00	General Circuit	CR	3-6
155-0048-01	Horizontal System	CR	3-6
155-0049-02	Horizontal System	CR	3-6
155-0050-01	Vertical Amplifier	CR	3-6
155-0051-00	TV & CRT Control Circuit	CR	3-6
155-0055-00	Horizontal System	CR	3-6
155-0056-00	Horizontal System	CR	3-6
155-0057-00	Operational Amplifier	CS	3-6
155-0059-00	Vertical Amplifier	CR	3-6
155-0061-00	Vertical Amplifier	CR	3-6
155-0067-02	General Circuit	CR	3-6
155-0076-00	Probe Control Circuit	CR	3-6
155-0078-10	Vertical Amplifier	CR	3-6
155-0083-00	Operational Amplifier	CR	3-6
155-0086-00	Knob Readout System	CR	3-6
155-0087-00	Knob Readout System	CR	3-6
155-0088-00	Knob Readout System	CR	3-6
155-0091-00	General Circuit	CR	3-6
155-0104-00	Knob Readout System	LS	3-6
155-0105-00	Knob Readout System	LS	3-6
155-0106-00	General Circuit	CR	3-6
155-0109-01	Horizontal System	CR	3-6
155-0110-00	Knob Readout System	CR	3-6
155-0111-01	General Circuit	CR	3-6
155-0112-01	General Circuit	CR	3-6
155-0114-00	Readout System	CR	3-6
155-0116-00	Operational Amplifier	CR	3-6
155-0118-00	General Circuit	NP	
155-0119-00	Readout System	OT	3-6
155-0121-00	Horizontal System	CS	3-6
155-0122-00	Horizontal System	CR	3-6
155-0123-00	Horizontal System	CR	3-6
155-0124-00	Horizontal System	CR	3-6
155-0126-00	Horizontal System	CR	3-6
155-0135-00	Knob Readout System	CR	3-6
155-0144-00	TV & CRT Control Circuit	CR	3-6
155-0145-00	TV & CRT Control Circuit	CR	3-6
155-0151-00	Horizontal System	CR	3-6
155-0152-00	TV & CRT Control Circuit	CR	3-6
155-0154-00	TV & CRT Control Circuit	CR	3-6
155-0157-00	General Circuit	CR	3-6

PART NUMBER	TYPE	STATUS§§	PAGE NO.
155-0158-00	General Circuit	CR	3-6
155-0160-00	Horizontal System	CR	3-6
155-0171-00	Knob Readout System	CR	3-6
155-0185-00	AD/DA Circuit	CR	3-6
155-0187-00	Vertical Amplifier	CR	3-6
155-0188-00	TV & CRT Control Circuit	CR	3-6
155-0196-00	Horizontal System	CR	3-6
155-0198-00	Knob Readout System	CR	3-6
155-0199-00	General Circuit	CR	
155-0205-00	General Circuit	CS	3-6
155-0207-00	Vertical Amplifier	CR	3-6
155-0215-00	Main Frame Logic	CR	3-6
155-0216-00	Horizontal System	CR	3-6
155-0217-00	Horizontal System	CR	3-6
155-0218-00	Vertical Amplifier	PP	3-6
155-0225-00	TV & CRT Control Circuit	PP	
155-0241-00	Horizontal System	NP	3-6
155-0244-00	General Circuit	PP	3-6
155-0247-00	TV & CRT Control Circuit	CR	3-6
155-0252-00	General Circuit	PP	
155-0253-00	General Circuit	PP	3-6
155-0273-00	Vertical Amplifier	PP	3-6
155-0274-00	Vertical Amplifier	PP	3-6
200-1608-00	Microcircuit Cover Lid	CR	3-7
200-1748-00	Microcircuit Cover Lid	CR	3-7
200-1748-01	Microcircuit Cover Lid	CR	3-7
200-1953-00	Microcircuit Cover Lid	NP	3-7
200-2027-00	Microcircuit Cover Lid	CR	3-7
200-2114-00	Microcircuit Cover Lid	CR	3-7
200-2138-00	Microcircuit Cover Lid	CR	3-7
200-2181-00	Microcircuit Cover Lid	CR	3-7
200-2182-00	Microcircuit Cover Lid	CR	3-7
200-2183-00	Microcircuit Cover Lid	CR	3-7
200-2274-00	Microcircuit Cover Lid	PP	3-7

§§ STATUS CODES

CR	Current Production
§EN	Engineering
PP	Pre-Prod
§CS	Customer Service
§NP	Non-Prod
§CL	Cancelled
§DL	Deleted
§OB	Obsolete Instrument
CM	Custom Mod Instrument
§DS	Digital Systems
§OT	Obsolescent Instrument
MP	Modified Part
LR	Last Supply Current
LS	Last Supply Customer Service
VN	Vendor
TC	Telequipment Current Prod.
IN	International
SC	Sony/Tek Current Prod.

THE STATUS IN THIS CATALOG WAS CORRECT AT THE TIME IT WAS PUBLISHED, BUT IT IS SUBJECT TO CHANGE.

§ TO USE A PART WITH THIS STATUS ON A NEW INSTRUMENT REQUIRES THAT A NEW PURCHASED PART INITIATION FORM (PPIF) BE INITIATED.

(A GLOSSARY OF TERMS FOR THESE STATUS CODES CAN BE FOUND ON PAGE 0-44).

INTEGRATED CIRCUIT CASE DRAWINGS

LINEAR

4

VOLTAGE REGULATOR TO-3

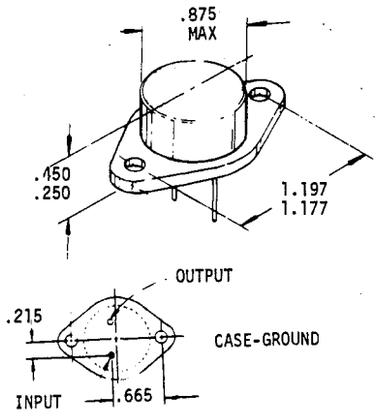

VOLTAGE REGULATOR TO-39

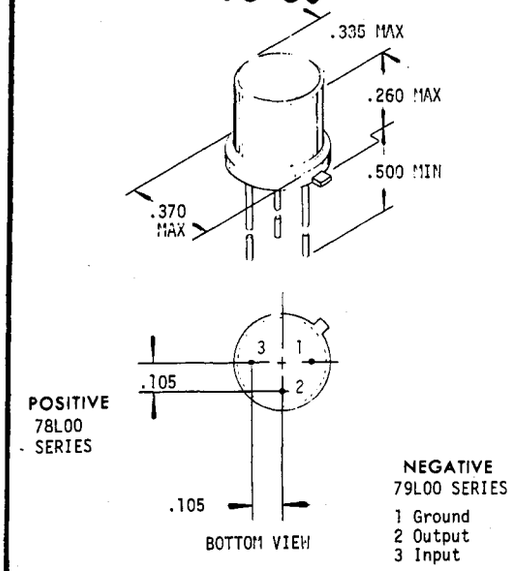

VOLTAGE REGULATOR TO-92

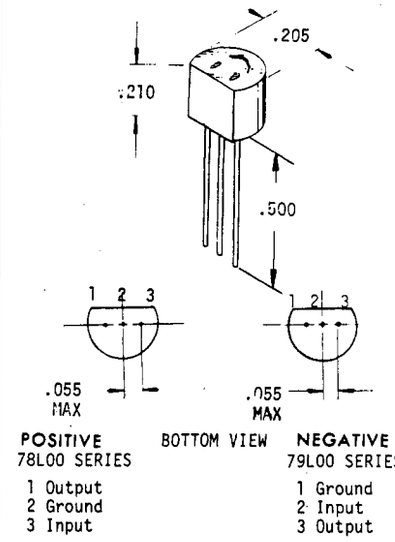

VOLTAGE REFERENCE TO-46

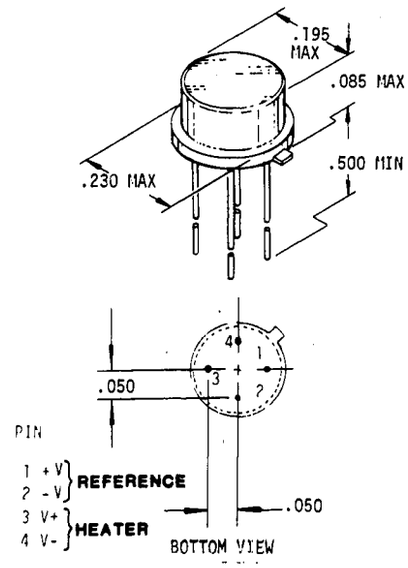

VOLTAGE REFERENCE TO-52

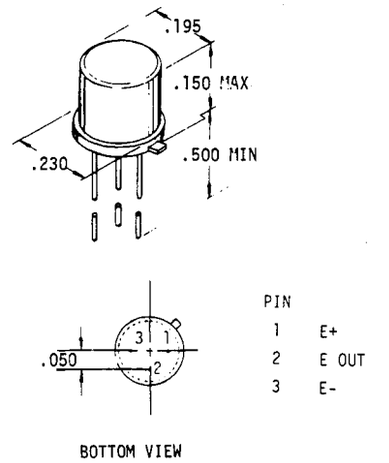

TO-99

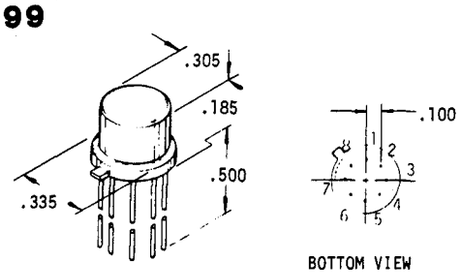

PIN NO.	311	710C	3028A
1	Ground	Ground	Input High
2	Input	Input	Current Source Base
3	Input	Input	Substrate & Case
4	V-	V-	Current Source Emitter
5	Balance	No Conn.	Input Low
6	Balanced Strobe	No Conn.	Output High
7	Output	Output	AGC
8	V+	V+	Output Low

INTEGRATED CIRCUIT CASE DRAWINGS (CONT)
LINEAR

TO-100

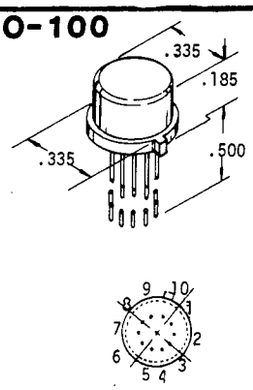

PIN NO.	LM171	319	529	723C	733	1496	68534
1	Input High	Output 1	Input 1	Current Sense	Input	+ Signal In	V+
2	Bias	Ground	Input 2	Inverting Input	Input	Gain Adjust	Non-Inv. Inpt
3	Ref. Voltage	+ Input 1	V-	Non-Invtg Input	Gain Sel	Gain Adjust	Invert. Input
4	Curr. Source Bias	- Input 1	Strobe 2	V Ref	Gain Sel	- Signal In	Latch Enable
5	Ground	V-	Output 2	Ground	V-	Bias	V-
6	Curr. Source Base	Output 2	Ground	V Out	Output 2	+ Output	NC
7	Input Low	Ground 2	Output 1	V_C	Output 1	+ Carr. Outpt	Q
8	Output High	+ Input 2	Strobe 1	V_{CC}	V+	- Carr. Input	$\overline{Q}$
9	Biastap	- Input 2	V_{CC}	Freq. Compnsatn	Gain Sel	- Output	Ground 2
10	Output Low	V+	V+	Current Limit	Gain Sel	V-	Ground 1

TO-101

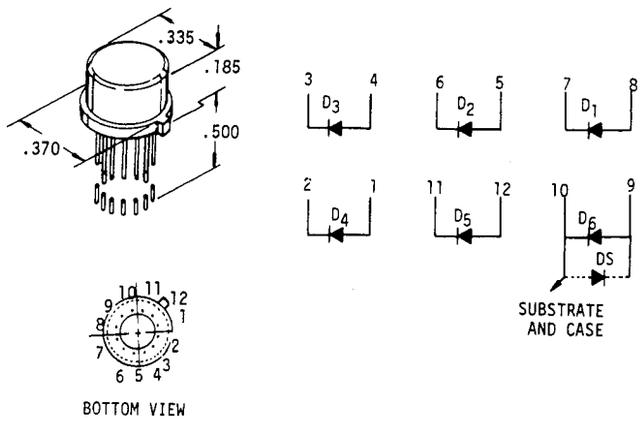

TO-220

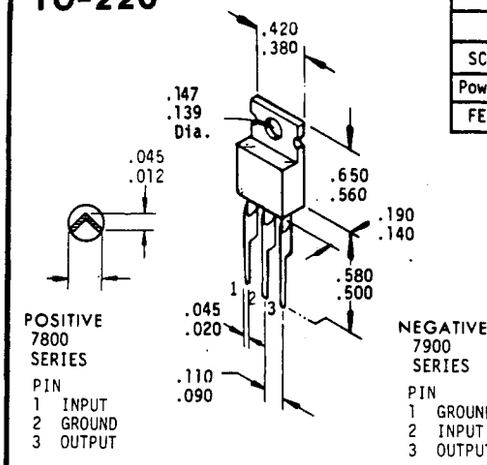

	LEADS		
	1	2	3
SCR	MT_1	MT_2	G
Power	B	C	E
FET	G	D	S

TO-202

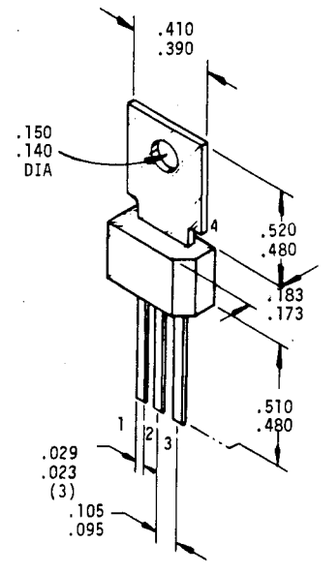

		LEADS			
		1	2	3	4
(A)	Power	E	B	C	
(B)	Power	B	C	E	
	SCR	C	A	G	A

SCR (Without Tab)

DESOLDERING TOOLS-STATIC CHARGE

TOOL	CHARGE LEVEL RETAINED ON TOOL	
	Immediate charge	Charge after time
Silverstat Soldapullt	0V	0V After five minutes
Deluxe Soldapullt	3kV	300-400V After five minutes
Standard Soldapullt	20kV	10kV After five minutes
Bulb Solder Sucker	10kV	4kV After five minutes
Solder-Wick	*2kV	0V After one minute

*Charge was retained due to solder-wick's plastic reel

Some circuit board components are sensitive to static charge. Also, some desoldering tools create a static charge. In order to identify and preclude potential problems, we have tested the various desoldering tools available for use at Tek.

A circuit board was used, with components removed, to determine static levels. Each device was tested ten times. The desoldering tools were checked for immediate charge retention and for the charge held after five minutes.

Each of the tools except the Silverstat Soldapullt, left a static charge on the circuit board and retained a charge (see chart). The Silverstat Soldapullt, a model with a metallized surface, left no charge and also retained no charge. Therefore, it is the preferred tool. It has been assigned part number 003-0795-00.

For more information on these desoldering tools, contact Herb Zajac, ext. 4759.

RELIABILITY NOTES

4

COMPONENT RELIABILITY DATA: CAUTION!

The Component reliability data listed in this catalog is compiled from Tek field failure data. As such, they represent historical information based on many different instrument applications and environments. Using a part with a particular rate does not guarantee that the part will exhibit that rate in the circuit. This is due to the dependence of the failure rate on application stress (voltage, current, temperature, mechanical stresses) and other factors which may determine the part failure to an even greater extent than application stress. Some of these factors are:

1. Dependence on typical or unspecified parameters for proper circuit operation.
2. Circuit characterization which did not anticipate component parameter distribution or account for variations in performances at high or low temperatures.
3. Effects of thermomechanical cycling stress, such as in a sweep circuit.
4. Safe operating area-second breakdown phenomena.
5. Susceptibility to burn-out by transients.
6. User-induced failure.
7. Poor maintenance techniques.

One might ask: Of what value is this reliability data? It is a comparative indicator of Tek's experience with that component. Parts having experienced failure rates greatly different from the generic rates should trigger some questions about their use in new applications. For example, is there evidence the part has been misapplied or occasionally suffered abuse? Have the suppliers had difficulty making the part? Does the new application stress the parts to the same degree as earlier applications? Component Engineering or Component Reliability Engineering (Ext. 1605) may assist in answering such questions. The value of the data is as a flag indicating we have experienced some kind of reliability problem with that part in the past. "Device Ratings for Tektronix Design" can help in identifying or avoiding misapplication problems (Call Component News, Ext. 4855 for copies).

HOW FAILURE RATES DEPEND ON APPLIED STRESS

SEMICONDUCTORS

Models have been developed to represent, in a heuristic manner, the dependence of semiconductor failure rates on voltage and temperature stress. These models are based on the Arrhenius equation which for a physical process, describes the process rate dependence on temperature:

$$R = R_o \exp - \frac{E_A}{kT_K}$$

where R = reaction rate

R_o = a constant

E_A = activation energy in eV

k = Boltzmann's constant (8.6×10^{-5} eV/K)

T_K = absolute temperature in Kelvin

Thus, the acceleration factor (AF) for the failure rate is

$$AF = \exp \frac{E_A}{k} \left[\frac{1}{T_1} - \frac{1}{T_2} \right]$$

Where T_1 is the test temperature (or reference temperature) and T_2 is the desired temperature in degrees Kelvin. Figure 1 shows this factor normalized to the failure rate at 60°C junction temperature. Also shown is the effect of voltage stress (MIL-HDBK-217B model for bipolar transistors only). Voltage stress ratio is defined as the ratio of operating V_{CE} to rated V_{CE}.

An enlarged copy of Figure 1 appears in the Transistor section of this catalog.

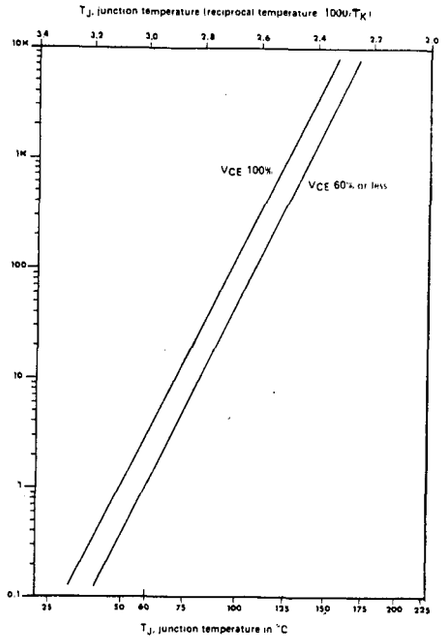

FIGURE 1 - Failure rate acceleration factors normalized to a failure rate of 1 at 60°C junction temperature. Effects of transistor voltage stress are indicated by the two lines for 100% and 60% voltage stress levels. For microcircuit acceleration factors, use the 60% line.

IC THERMAL RESISTANCE

In order to run reliability predictions using computer programs (such as MTBF) which require input of the part junction temperature, you must know the part power dissipation and thermal resistance. Due to the packaging combinations available thermal resistance reliability data should be obtained from buyer, vendor or Component Reliability information.

IN ADDITION TO THE GENERIC FAILURE RATE DATA LISTED HERE, MANY OF THE SECTIONS OF THIS CATALOG LIST THE EXPERIENCED FAILURE RATE DATA FOR THE INDIVIDUAL PARTS.

GENERIC FAILURE RATE DATA

100%

	%/Warranty Yr Tek Experience
Microcircuits, Non Tek-Made	
Linear	.06
Digital	.02
MOS/LSI/Memory	.02

†† CATALOG RELIABILITY CODES

USAGE/YR	CODE
≥10	1
≥100	2
≥1 000	3
≥10 000	4
≥100 000	5
≥1 000 000	6
≥10 000 000	7

FAILURE FREQ	CODE		%/YR (median)
1/100 000	A	=	.001
1/50 000	B	=	.002
1/20 000	C	=	.005
1/10 000	D	=	.01
1/5 000	E	=	.02
1/2 000	F	=	.05
1/1 000	G	=	.1
1/500	H	=	.2
1/200	I	=	.5
1/100	J	=	1.0+

INTEGRATED CIRCUITS APPLICATION NOTES (CONT)

INTEGRATED CIRCUIT QUALITY AND RELIABILITY

QUALITY AND RELIABILITY are terms often mistakenly used interchangeably. QUALITY is an indication of the proportion of defective devices existing in a given lot at a given inspection point. RELIABILITY is a measurement of the probability that an initially good part will remain good over a given time period.

RELIABILITY SCREENS

Reliability screening of microcircuits can reduce field failure rates, sometimes by up to a factor of 10. The single most effective reliability screen, high-temperature burn-in, removes weak (infant mortality) parts and is especially recommended if junction temperature of 75°C or higher is encountered in the part application

Some Tek part numbers are available with 100% burn-in. See index pages for those part numbers.

CMOS has what appears to be the most ideal set of characteristics for a logic family: low power, high noise immunity, wide supply voltage range, and high input impedance. With all this going for CMOS, what are the drawbacks?

One drawback is operating speed. To increase speed you can increase the supply voltage. But, at higher speeds and higher supply voltages, power dissipation can exceed that of equivalent TTL.

The other potential way of increasing speed is CMOS on a synthetic substrate. Manufacturers have had problems with this process however, and only a limited number of products are available.

The high input impedance has two drawbacks: noise susceptibility in a high AC noise environment, and AC fan-out. DC fan-out on most CMOS is specified at 50. AC fan-out is much lower, with supply voltage and operating speed becoming the deciding factors.

The output specs of the early CMOS gates are further complicated since the gates have series and parallel MOS transistors in the output.

The buffered CMOS introduced by Fairchild and since introduced by others, has large geometry output devices that give more output drive and uniform specs from device to device.

High input impedance increases the chance of damage by static discharge. Damage by static may cause complete failure of a part or degradation of performance such as increased input current.

Some basic handling procedures will prevent most static damage. Avoid using plastic containers, styrofoam, etc. for transporting CMOS. Use a grounded soldering iron and discharge the static charge on yourself before handling CMOS. All unused inputs on CMOS should be connected to a supply to prevent them from floating due to leakages, internal capacitive coupling and system noise.

All CMOS now has protection diodes on the input to help with the static problem. The diodes are the subject of new problems. Specifications vary and are vague —

RCA says, "Input current should be limited to the microampere level."

Fairchild states that "currents must be limited to 10 mA."

Motorola further says, "It is necessary to limit the input current to ± 10 mA per package pin. This 10 mA rating also applies to the V_{dd} and V_{ss} pins.

Therefore, if any device has four inputs which may be forward biased, they should be limited at 2.5 mA each."

Texas Instruments also claims a 10 mA maximum, but we have found the input protection diode current on one gate will affect input current on other gates in that package. According to the TI CMOS program manager, Tim Smith, "The phenomenon you see is normal."

One final comment about Fairchild CMOS — Fairchild CMOS is specified to run at 18 volts maximum. According to an internal memo, they recommend running their CMOS at something less than 18 volts.

Their CMOS has a typical breakdown of 22 volts which is normally a catastrophic breakdown. Also, Fairchild states their reliability to be less at the higher supply potentials.

RCA and Motorola told me that their parts had a typical breakdown of 27 volts and that 18 volts was conservative.

Checklist for CMOS design

CMOS has many characteristics which differ from other logic families. The following design checklist is intended to point out those differences and remind design engineers of inherent CMOS limitations.

OK	Possible Trouble	
☐	☐	*Have you taken adequate precautions to avoid static electricity damage?
☐	☐	*Have you protected signal inputs against overvoltage spikes? Overvoltage spikes can damage clamp diodes or cause latchup.
☐	☐	*Have you considered the design differences between buffered and non-buffered parts? They are not interchangable in some circuits, such as typical two-gate oscillators.
☐	☐	*Is the output load within the device's specification?
☐	☐	*Does the manufacturer specify parameters at the power supply voltage you're using? Some vendors list power supply voltages at which there are no specs.
☐	☐	*Does the operating frequency exceed 500 kHz? The power consumption of a CMOS gate exceeds that of a low-power Schottky TTL gate between 500 kHz and 2 MHz, depending on supply voltage level. Low—power Schottky may be a better choice for some applications.
☐	☐	*Have you used analog switches? Excessive current through analog switches results in latching and destructive breakdown. Protective circuitry is essential.
☐	☐	*Is the power supply switched on before applying signal inputs? Damage can occur if the diode between input and V_{DD} is forward biased.
☐	☐	*Do input rise and fall times exceed 15 μsec? You could exceed the maximum power dissipation of the device, especially when using high currents and supply voltages.
☐	☐	*Have you terminated all inputs?
☐	☐	*Have you used CMOS gates as linear amplifiers? This practice destroys buffer gates, fails to operate below 4 volts and makes vendor interchangeability more problematical.
☐	☐	*Have you used flip-flops with transmission gate inputs driven above and below the supply voltages? If you have, they can malfunction when interfacing other logic families from distant boards.
☐	☐	*Have you used one-shots? Most vendor one-shots are not truly resettable; although reset shuts off the timing cycle, they do not start immediately on another cycle (3 to 4 msec output risetimes have been observed.
☐	☐	*Have you considered energy noise levels? Using 5 volt supply levels, CMOS has an order of magnitude less noise margin than TTL (about 0.4 nJ for CMOS and 4.0 nJ for standard TTL).
☐	☐	*Have you used "wire-or" configurations? The outputs of a McMOS device cannot be connected as a "wire-or" because of the complementary pair configuration.
☐	☐	*Have you used typical values in the design? Because of the large part-to-part process variations, you cannot afford to assume that the units you receive will operate at the values listed as typical.
☐	☐	Plastic has a price advantage over ceramic; but, the same plastic is much more susceptible to failure in high humidity (above 50 percent) conditions.

For further CMOS information, contact Wilton Hart, Component Evaluation, ext. 2572.

Operational amplifiers

GENERAL PURPOSE

The workhorse of operational amplifiers is, of course, the μA741.

The 741 is internally compensated with a 30pF capacitor to give a 3dB cut-off frequency of around 3Hz with a 20dB/decade roll-off down to unity gain at 1MHz. It will sink or source up to 15mA of current.

If an application exists which uses several 741's the MCM58 or dual 741, will give about a 20% cost savings per op amp.

The LM301A is a general purpose of amp with external compensation. It has lower input currents and better temperature drift specs than the 741. But, the LM301A is more expensive, and one must supply the compensating capacitor.

So, the LM301A should be used where the compensation needs to be tailored to the particular application or where slightly better input current specs are desired. Note that the LM301 offset voltage is greater than that of the 741.

VOLTAGE FOLLOWERS

Tek has two voltage followers part numbered: the LM302 and LH0033CG.

The LM302 is a high gain op amp internally wired as a voltage follower. It is not a highly used part, and its price reflects this. And, it is only available in a TO-99 case, so insertion costs are higher than for a mini-DIP.

The LM302 has a rather high V_{OS} but it does have internal offset capability. On the positive side, slew rate is 10v/μsec typical. Input impedance of 1,000 megohms minimum and low input currents make it a good device for a sample and hold.

With internal compensation, the LM302 can be a replacement for the 741 in voltage follower applications. The device can source 20mA, although its sink capability is only 1/5 of that. Large signal frequency response falls off sharply around 60kHz.

The other true voltage follower is the hybrid, FET input LH0033CG. It is basically a current boost buffer used in applications such as high-speed line drivers, video impedance transformation or op amp isolation buffer for driving reactive loads.

The LH0033CG has a large V_{OS} which, unfortunately is not easily adjusted out. It comes in a TO-8, 12-Pin package.

WIDE BANDWIDTH

Three of the faster, wider bandwidth op amps used at Tek are the NE5534, LM318, and HA2625.

The NE5534 comes in two dual versions (NE5532-8-Pin and NE5533- 14 PIN) and also sports low noise and 600Ω load driving capabilities. The LM318 has a 50V/μS minimum slew rate and the HA2625 has a 100MHz typical gain bandwidth product (at Av = 100).

LOW INPUT and OFFSET CURRENT

Two bipolar op amps that are noted for their low input and offset currents are the MC1456 and the LM308.

The MC1456 (formerly Signetic 5556) has an input resistance of 3 megohms, I_B of 90nA max, and I_{OS} of 30nA max. It will work as a low input current replacement for the 741 because it has internal compensation plus an internal offset adjustment.

The internal offset adjustment will be needed because the MC1456 has 12 mV maximum input voltage offset (compared to the 741 with a V_{OS} of 6 mV max).

The MC1456 has the added advantage of a fast slew rate of 2.5v/μsec.

For better price the LM308 gives a one order of magnitude edge over the 741. It only requires a 0.8 mA of supply current maximum. Therefore, its power consumption is minimal.

The disadvantages of the LM308 include a maximum offset voltage of 12 mV with no internal offset voltage adjustment on the chip. The LM308 also requires external compensation, and is slow at 0.3v/μsec slew rate.

FET INPUT

There are several very low cost FET input op amps here at Tek. They are the LF356, TL062, LF351, CA3130, CA3140, and the CA3160. National will be phasing out the hybrids (LH0042C and LH0022C) due to the availability of these BI-FET's.

The FET's in the devices are ion-implanted but the CA line uses PMOS transistors, while the front ends of the others are JFET's. Both BI-MOS and BI-FET have input resistances in the neighborhood of 10^{12} ohms. The noise and drift performance of the BI-FET is superior to that of the BI-MOS.

Remember that the bias current in the BI-FET doubles every 10°C. This is significant even with the self-heating of the device.

The LF356 is a very good low noise amplifier. Its maximum supply current, though, is an outrageous 10 mA and has asymmetrical slew rate limiting.

The LF351 is noisier and has higher offset voltage drift than the LF356. Advantages over its predecessor are fairly symmetrical slew rate, has a maximum supply current of 3.3 mA, and is two thirds the cost. The LF351 comes in dual (LF353/TL072) and quad (LF347/TL074) versions.

A new addition is the AD542, a precision BI-FET op amp with 2 mV max V_{OS}. A low power dual BI-FET, the TL062, with 500 μA maximum supply current, is available also.

Because of the PMOS input transistor, you can drive BI-MOS devices as much as 0.5V below the negative supply rail without losing the signal's phase sense. Although the input transistors are protected, the maximum differential input voltage is 8 volts and the current must be limited to 1mA.

Even though the CA3140 has low bias current at 25°C, the leakage increases greatly with temperature, and bias current is not even specified at 70°C. This BI-MOS device also sinks very little output current. The CA3130 and the CA3160 (compensated CA3130) have a CMOS output stage. This allows an output swing to within 10mV of either supply voltage but only for very high values of load impedance.

Operational transconductance amplifier

Transconductance (g_m) is defined as: i_{out}/e_{in} and is expressed in units of mhos (℧).

The CA3080 is an operational transconductance amplifier whose output current is proportional to the voltage difference at the differential input terminals of the IC, given by the expression:

$$I_{out} = g_m \times V_{in}$$

The OTA can be utilized in many unique applications because of the availability of the amplifier bias current (I_{ABC}) terminal which allows control of g_m linearly over a 3 decade range:

$$g_m\ (m℧) = 19.2 \times I_{ABC}\ (mA)$$

Uses of the CA3080 include sample and hold circuits, gain controls, modulators, multiplexers, and micropower comparators. They can be used to build voltage-controlled oscillators and filters, and four quadrant multipliers.

In the sample and hold circuit shown, the PNP transistors provides the I_{ABC} bias current for sampling and holding. When I_{ABC} = 0, the OTA is shut off making the output impedance equal to two parallel collectors of the output transistors.

Leakage is not specified on the CA3080, but typical specs report .08 nA for $V_{pin2,3,6}$ = 0 volts and .3nA for $V_{pin2,3,6}$ = 36 volts. Whether this is acceptable depends on the size of holding capacitors, the time of storage, and the maximum tolerance of voltage change required.

One advantage of the CA3080 is its low power consumption. Quiescent OFF power can be as little as 10 μW and the maximum ON power, 36 mW. A micropower comparator can be made to have a quiescent power consumption of only 10 μW.

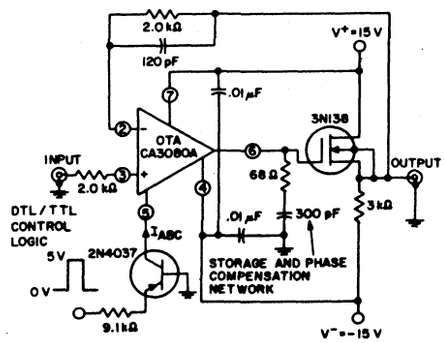

Schematic diagram of OTA in a sample and hold configuration. Reprinted from RCA Databook

One disadvantage that follows is that the CA-3080 can only sink or source a maximum of 300uA worst case, hence it cannot drive large external input capacitances very fast nor supply large voltages to small load resistances. The CD4007 three inverter/amplifiers can be used to increase the drive capability of the CA3080.

For further circuit applications such as four quadrant multipliers, amplitude modulators, linear multiplexers or gyrators in active filters, see the RCA Linear Data Book and App. Note 6668.

LM321 and LM725C op amps

New additions to the precision area and the OP-07 and OP-10.

The OP-07 has a maximum V_{OS} and V_{OS} drift of 150μV and 1.8μV/°C, respectively. Input currents are ±7μA maximum (note: they can be positive or negative because internal current cancellation is used), and both open loop gain and CMRR are 100,000 minimum.

The device is slow, however, with typical bandwidth and slew rate of 0.6MHz and 0.17V/μS, respectively.

The OP-10 is a dual OP-07 with the V_{OS} trimmed for a typical 0.3mV match between the two amps. The V_{OS} on the individual amps is 1.3μV maximum, while other individual characteristics are similar to the OP-07. This device is especially good for the 2 and 3 OP-AMP instrumentation amplifier configurations.

OPERATIONAL AMPLIFIERS: Rules of thumb

1. If the offset voltage drift of an op amp is not specified, a rule of thumb is that there will be 4μV/°C of drift for every 1 mV of V_{OS}.

2. Most op amps specify power supply voltages at ±18 volts. This does not mean the supplies have to be symmetrical about ground. For instance, +5v and -20v can be used as long as the output voltage swing requirements are not greater than 2-1/2V less than these supply rails.

3. It is not recommended for new designs to use the unregulated + or -33V supply of the TM500 mainframe series for the supply on op amps. This supply can surpass the maximum 36V when the mainframe is subjected to a line voltage +10% above nominal value.

4. To minimize voltage offset drift of an op amp, the source resistance to the two input terminals should be made equal, especially if the source resistance is greater than 10k ohms.

Digital MC specs

	V_{CC} = +5.0V T_C = 25°C					V_{CC} = 0 V_{EE} = -5.2
	Standard†	L†	LS	S	CMOS	ECL
V_{IH}(MIN)	2V	2	2	2	3.5	-1.105
V_{IL}(MAX)	.8V	.7	.8	.8	1.5	-1.475
V_{OH}(MIN)	2.4V	2.4	2.7	2.7	4.99	-0.98
V_{OL}(MAX)	.4V	.4	.5	.5	0.01	-1.850
I_{IH}(MAX)	40μA	10μA	20μA	50μA	10pA typ	265μA
I_{IL}(MAX)	-1.6mA	-.18mA	-.4mA	-2mA	10pA typ	.5μA
I_{OH}(MAX)	-400μA	-200μA	-400μA	-1000μA	I_DP* = -.12mA	20mA typ
I_{OL}(MAX)	16mA	3.6mA	8mA	20mA	I_DN* = .12mA	35μA
FANOUT (TO ITSELF)	10	20	20	10	50 DC 3 AC 10 MHz	70 DC only 7 AC 150 MHz
AVERAGE PROP DELAY	10nS	33nS	9.5nS	3nS	35nS into 15pF typ.	2nS
AVERAGE POWER DISSIPATION PER GATE	10mW	1mW	2mW	19mW	.01 to .5μW Quiescent	25mW
SPEED-POWER PRODUCT	100pJ	33	19	57	.02	50
MIN NOISE IMMUNITY						
(V_{IL} - V_{OL}) LOW	.4V	.3V	.3V	.3V	1.5V (.3 x V_{DD})	160mV
(V_{IH} - V_{OH}) HIGH	.4V	.4V	.7V	.7V	1.5V (.3 x V_{DD})	210mV
INPUT CAPACITANCE	---	---	---	---	5pF	---

* I_DP = Output drive current, P-channel (source)

I_DN = Output drive current, N-channel (sink)

Output currents are not standardized among the CMOS logic family. Check spec sheets for particular IC.

		DRIVEN DEVICE					
		74	74L	74LS	74S	CMOS	NMOS
DRIVING DEVICE	74	10	40	20	8	50(1)	50
	74L	2	20	10	1	50(1)	50
	74LS	5	40	20	4	50(1)	50
	74S	12	100	50	10	50(1)	50
	CMOS	0(3)	2(2)	1(2)	0(3)	50	50
	NMOS	2	20	10	1	50	50

(1) Pull-up resistor on active output devices or open collector TTL is recommended for driving CMOS.

(2) These values vary according to the CMOS driving device. Check the sink and source current specs for the device under consideration. (Increased sink-current capability of CMOS gates can be achieved by paralleling input and output connections.)

(3) Only the 4049 and the 4050 buffers can drive TTL directly.

† SHOULD NOT BE USED IN NEW DESIGN.

ECL design checklist

The following design checklist for ECL devices is taken from the Government/Industry Data Exchange Program (GIDEP) files at Tek. To access additional GIDEP information (more than 35,000 reports are currently on file), contact Bill Snell, 1253WR. If you have questions about ECL devices, contact Joseph Parent, 2573.

Requirement	Yes	No	N/A
1. *Has the fanout been checked?* Both AC limitations and current needed in the transmission line termination can be expected to restrict the system fanout to a smaller number than expected from simplistic considerations.			
2. *Has the wired-OR configuration been used?* When several circuits are connected with wired-OR outputs, a noise spike may be generated on the output if all gates are at a 1 output, and all gates but one are simultaneously changed to a logic 0. The noise spike is due to the one gate suddenly having to source the output current previously supplied by the other circuits.			
3. *Has the correct interconnect wiring been used between devices?* Incorrect selection of conventional interconnect wiring could result in false system operation due to a high percentage of incident pulse reflections and subsequent lowering of the AC noise immunity.			
4. *Is a low-noise power supply being used?* High frequency noise and ripple from the power supply should be avoided because they produce, in effect, differences in voltage levels among sections of a system, and lead to loss of noise margin. It is recommended that high-frequency power supply noise be held below 50 mV.			
5. *Have V_{CC1} and V_{CC2} pins been connected directly to the ground plane as close as possible to the package?* V_{CC1} should equal V_{CC2} for best operation. If V_{CC1} drops below V_{CC2} by more than 200mV, the output devices could saturate and cause propagation delays.			
6. *Are only a few ECL devices used in a predominantly TTL system?* Care must be exercised with both logic families when using this technique to be certain of proper bypassing of the power supply. This prevents coupling of noise between circuit families. The safest method is to use a 0.01μF ceramic capacitor across each ECL device. When larger systems are operated on a common power supply, separate power buses to each logic family help to prevent problems.			
7. *Are double-sided boards used?* A ground plane is recommended on one side of the board. If a ground plane is not possible, a ground bus must be used as part of the layout on the board to provide a low inductance V_{CC} line.			
8. *Have high current devices such as relays, lamps, core drivers been incorporated on the same board as the logic circuits?* These high current circuits should be connected to a separate ground bus on the board and in the backplane.			
9. *Are flip-flops used in the design?* A damping resistor or a combination of series/parallel terminations with microstrip lines is required when driving flip-flops whenever fanouts exceed four and whenever line lengths are greater than three inches.			
10. *Have worst case combinations of driver output and load input characteristics been computed?* A 35% overshoot limit ensures that system speed is not compromised either by saturating an input on overshoot or extending into the threshold region on the following undershoot.			

INTEGRATED CIRCUITS APPLICATION NOTES (CONT)

PACKAGE NUMBER CODES

SUFFIX

TEXAS INSTRUMENTS	
H,U.Z,W	Flatpak
J	Ceramic DIP
JA	Alumina-Filled-Glass DIP; 14, 16 Lead
JB	Metal Base DIP; 14, 16 Lead
JP	Alumina-Filled-Glass (Ceramic Base DIP) 8 Lead
L	TO-5 Style; 8, 10 Lead
N	Plastic DIP
ND	Plastic DIP; 8 Lead
FA	Ceramic Flatpak; 14, 16 Lead
LA	TO-5; 3 Lead
RA	Ceramic DIP; 24 Lead
SB	Metal Lid Flatpak; 16, 24 Lead
P	Mini DIP

SIGNETICS	
A	Plastic DIP; 14 Lead
B	Plastic DIP; 16 Lead
DA	TO-3; 3 Lead
DB	TO-5; 3 Lead
F	Ceramic DIP (Glass); 14, 16, 24 Lead
G,J,W	Ceramic Flatpak; 10, 14, 16 Lead (Alloy 42)
I	Ceramic DIP (Kovar); 14, 16, 18, 22, 24, 28, 40 Lead
K	TO-5 Style; 10 Lead, Low Profile
L	TO-5 Style; 10 Lead, Hi Profile
N	Plastic DIP; 24 Lead
NX	Plastid DIP; 24 ead, (SM Body Width)
Q	Ceramic Flatpak; 10, 14, 16, 24 Lead (Kovar)
T	TO-5; 9 Lead
V	Plastic Mini DIP; 8 Lead
XA	Plastic DIP; 18 Lead
XC	Plastic DIP; 22 Lead

RCA	
D	Ceramic DIP
E	Plastic DIP
F	Frit Seal DIP, Ceramic
H	Chip
K	Flatpak
L	Beam Lead Chip
Q	Quad in-line, Plastic
S	Dual Inline Formed Lead TO-5
T	TO-5 Style
V	Spider Formed Leads TO-5

MOTOROLA	
L	Ceramic DIP
G	TO-5 can
F	Flatpak
L	Ceramic DIP
P	Plastic DIP
PQ	Plastic DIP (Staggered Leads)
P1	Plastic DIP, 8 Lead
P2	Plastic DIP, 14 Lead
R	TO-66
S	Ceramic Flatpak with Stud
K	Metal Power (TO-3)

FAIRCHILD	
D	DIP(Hermetic, Ceramic)
F	Flatpak
H	Metal Can (TO-8, TO-78, TO-99, TO-100, TO-101)
J	Metal Power (TO-66)
K	Metal Power (TO-3)
P	DIP (Plastic)
T	Mini DIP
U	Power Package (Molded, TO-220)
X	Dice
E	TO-5 Style (Epoxy)

PREFIX

Advanced Micro Devices	U or AM or SN
Analog Devices	AD
Fairchild Semiconductor	SL or 9N
General Electronics	SIL
Harris Semiconductor	HDI
Intel Corp.	P or D or Int
ITT Semiconductor	ITT
Litronix	LIT
Monsanto	Q
Motorola	MC, SC or SPQ
National Semiconductor	INS, LF, DM, DS, LM, or MM
RCA	CA or CD
Raytheon	RA or CA
Signetics	N or NE
Silicon General	SG
Siliconix	S
Stewart-Warner	SW
Texas Instruments	KT, SN, TP or TMS

TABLE OF MICROCIRCUIT MANUFACTURER SUFFIXES

COMPANY	DEVICE CLASSIFICATION	PLASTIC SUFFIX	CERAMIC SUFFIX	SCREENED DESIGNATION FOLLOWING MFR. PN
AMD	Non-Proprietary	N	J	B
AMD	Proprietary	PC	DC	B
AMI		P	C,E***	*
EA		PC	DC	*
Fairchild		PC	DC	QR
General Instruments		P	C	*
Harris		3	1	-8
Intel Corp.		P (prefix)	C (prefix) D (prefix)	Tek PN
Intersil		P	D	*
MMI		N	D	*
Mostek		N	P	MKX
Motorola	TTL	N	J,S***	DS
Motorola	MOS	P	L,S***	D
	ECL	P	L,S***	1
National		N	J	A+
NEC		C	D	Tek PN
Plessey		DP	DG	Tek PN
RCA		E	F	X
Rockwell		P	C	Tek PN
Signetics		N	F	B
Synertek		P	C,D***	*
Texas Instruments		P,N		P3
Texas Instruments			J	P4
ZILOG		PS	CS	Tek PN

* Not presently selling screened devices to Tek.
** Screened not presently bought in this package.
*** CER dip package.

NOTES

4

COST CODE

(CC COLUMN)

CODE	A	B	C	D	E	F	G	H	I	J	K	L	M	N	O
≈ VALUE with +	.75¢	2¢	3.75¢	6¢	10¢	18¢	35¢	60¢	$1	$2	$3.75	$6	$10	$18	$35+
≈ VALUE no suffix	.5¢	1.5¢	3¢	5¢	8¢	15¢	25¢	50¢	75¢	$1.50	$3	$5	$8	$15	$25
≈ VALUE with -	.2¢	1.25¢	2.5¢	4.25¢	7¢	13¢	22¢	40¢	65¢	$1.25	$2.50	$4.25	$7	$13	$22

NOTE: Costs may vary from order to order due to order quantities, vendor, etc.

HEAT SINK AND INSULATORS

5

TABLE OF CONTENTS

SECTION 5

PAGE(S)

HEAT SINKS ..... 5-2 THRU 5-27

INSULATORS ..... 5-28 THRU 5-46

NOTES 5-47

TEK ALUMINA ELECT. INSULATING HEAT SINKS AND INSULATORS .... 5-48 THRU 5-50

CROSS REFERENCE INDEX ..... 5-51 THRU 5-55

APPLICATION NOTES
FIN SPACING AFFECTS HEAT SINK EFFICIENCY ... 5-56

TEMPERATURE CONVERSION CHARTS

DEGREE C	=	DEGREE F
-90°		-130.0°
-80°		-112.0°
-70°		-94.0°
-60°		-76.0°
-50°		-58.0°
-40°		-40.0°
-30°		-22.0°
-20°		-4.0°
-10°		14.0°
0°		32.0°
1°		33.8°
2°		35.6°
3°		37.4°
4°		39.2°
5°		41.0°
6°		42.8°
7°		44.6°
8°		46.4°
9°		48.2°
10°		50.0°
20°		68.0°
30°		86.0°
40°		104.0°
50°		122.0°
60°		140.0°
70°		158.0°
80°		176.0°
90°		194.0°
100°		212.0°
110°		230.0°
120°		248.0°
130°		266.0°
140°		284.0°
150°		302.0°
160°		320.0°
170°		328.0°
180°		356.0°
190°		374.0°
200°		392.0°
220°		428.0°

DEGREE F	=	DEGREE C
-90°		-68.0°
-80°		-62.0°
-70°		-57.0°
-60°		-51.0°
-50°		-46.0°
-40°		-40.0°
-30°		-34.4°
-20°		-28.9°
-10°		-23.3°
0°		-17.8°
1°		-17.2°
2°		-16.7°
3°		-16.1°
4°		-15.6°
5°		-15.0°
6°		-14.4°
7°		-13.9°
8°		-13.3°
9°		-12.8°
10°		-12.2°
20°		-6.7°
30°		-1.1°
40°		4.4°
50°		10.0°
60°		15.6°
70°		21.1°
80°		26.7°
90°		32.2°
100°		37.8°
110°		43.3°
120°		48.9°
130°		54.4°
140°		60.0°
150°		65.5°
160°		71.1°
170°		76.6°
180°		82.2°
190°		87.8°
200°		93.3°
220°		104.4°

CONVERSION FORMULA F° -32 x 5/9 = C
C° x 9/5 +32 = F

CATALOG WRITER: NORMA PETERSON, EXT. 2577.

HEAT SINKS

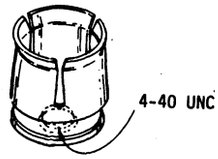

TO-5 TRANSISTOR
214-1611-00 CC: H †† RC: 4H
Tapped and insulated base
Beryllium Copper, Blk Ebonol
*θ CE 25° C/W

TO-5 TRANSISTOR
214-2473-00 CC: F
Beryllium Copper, Cd pl
*θ CE 12° C/W

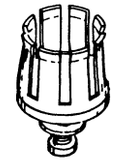

TO-5 TRANSISTOR
214-0757-00 CC: J
w/4/40 Scr w/shoulder washer
Beryllium Copper, Blk Ebonol
*θ CE 12° C/W

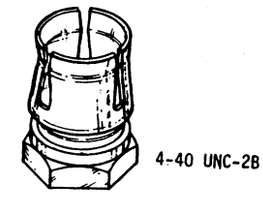

TO-5 TRANSISTOR
214-2569-00 CC: I †† RC: 4E
Tapped & insulated base
Beryllium Copper, Blk Ebonol
*θ CE 16° C/W

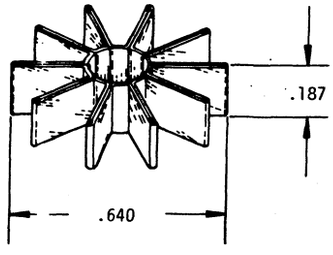

TO-18 TRANSISTOR
214-0498-00 CC: E
A uminum, Black Anodize
* CA 65° C/W

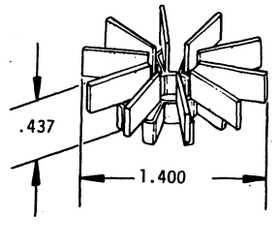

TO-8 TRANSISTOR
214-1799-00 CC: G †† RC: 4E
Aluminum, Black Anodize
*θ CA 27° C/W

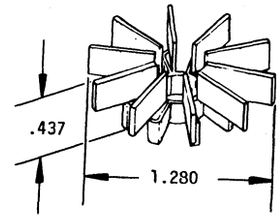

TO-5 TRANSISTOR
214-1254-00 CC: F- †† RC: 4E
Silver Bronze, Blk Paint
*θ CA 30° C/W

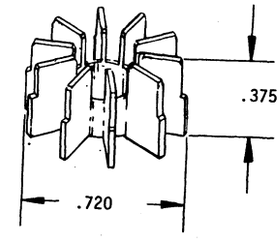

TO-5 TRANSISTOR
214-1291-00 CC: E †† RC: 5D
Silver Bronze, Blk Paint
*θ CA 46° C/W

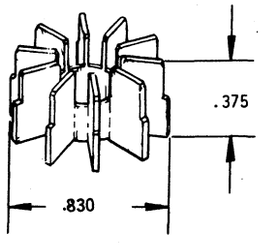

TO-8 TRANSISTOR
214-1813-00 CC: F †† RC: 4C
Aluminum, Black Anodize
*θ CA 42° C/W

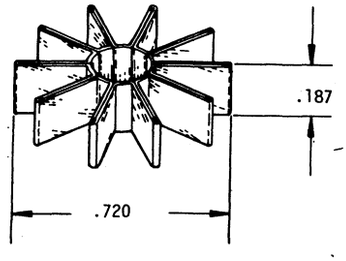

TO-5 TRANSISTOR
214-1292-00 CC: D †† RC: 5C
Silver Bronze, Blk Ebonal Finish
*θ CA 58° C/W

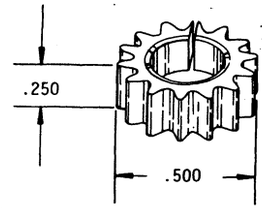

TO-5 TRANSISTOR
214-2593-00 CC: H
Aluminum, Black Anodize
*θ CA 65° C/W

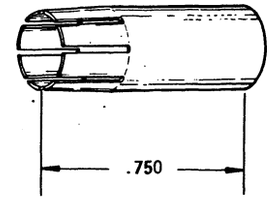

TO-18 TRANSISTOR
214-0693-00 CC: J +
Aluminum, Black Anodize
*θ CA 70° C/W

TO-5 TRANSISTOR
214-0269-00 CC: J- †† RC: 4B
Aluminum, Black Anodize
*θ CA 65° C/W

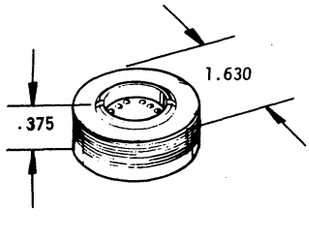

TO-8 TRANSISTOR
214-1497-00 CC: L-
Aluminum, Black Anodize
*θ CA 32° C/W

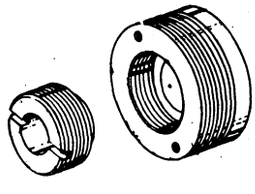

TRANSISTOR

CASE	PART NUMBER	CC	†† RC	*θ	CA
TO-5	214-0668-00	H-		50°	C/W
TO-5	214-0761-00	J+		50°	C/W
TO-5	214-1208-00	I+		40°	C/W
TO-5	214-1300-00	J+		30°	C/W
TO-18	214-0667-00	I		55°	C/W

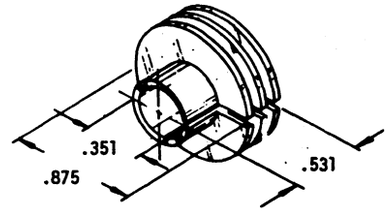

TO-5 TRANSISTOR
214-3136-00 CC: H-
Aluminum, Black Anodize

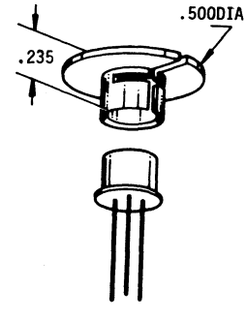

TO-92 and TO-18 TRANSISTOR
214-3414-00 CC: H
Aluminum, Black Anodize

*Thermal Resistance Symbols: θCE = Thermal Resistance Device Case to External Heat Sink.
θCA = Thermal Resistance Device Case to Ambient Environment.

HEAT SINKS (CONT)

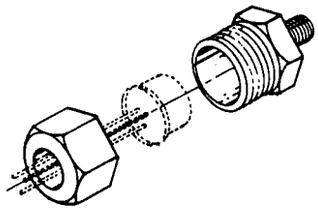

TO-5 TRANSISTOR

214-0289-00 CC: I+
*θ CE 20° C/W

TO-18 TRANSISTOR

214-0653-00 CC: M+
*θ CE 20° C/W

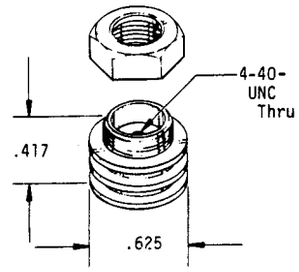

TO-5 TRANSISTOR

214-1121-00 CC: I- RC: 3E
Aluminum, Black Anodize
*θ CA 40° C/W

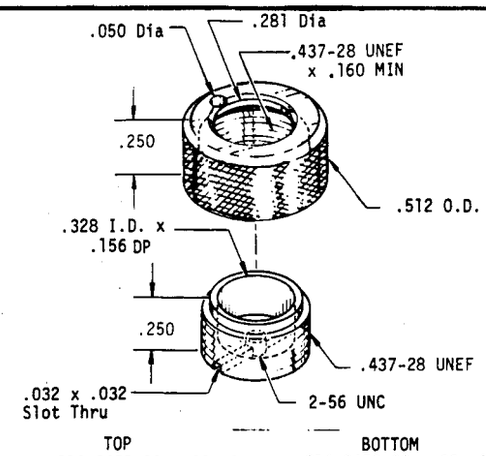

TOP
214-2459-00 CC: J-
Aluminum (251-0236-00)

BOTTOM
214-2458-00 CC: J
Aluminum (251-0281-00)

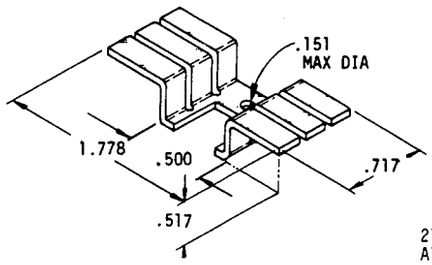

TO-220 TRANSISTOR

214-2956-00 CC: F-
Aluminum, Black Anodize
"Hat" for both part numbers below.

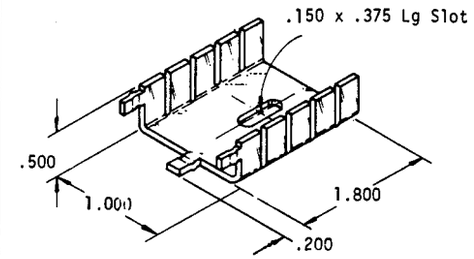

214-2953-00 CC: H
Aluminum, Black Anodize
*θ CA = 19° C/W

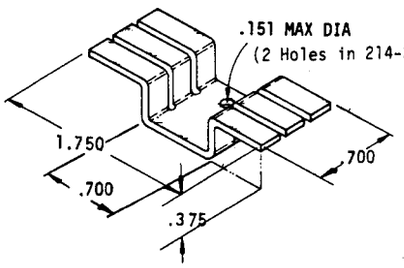

TO-220 TRANSISTOR

214-2955-00 CC: F-
214-3258-00 CC: I
Aluminum, Black Anodize

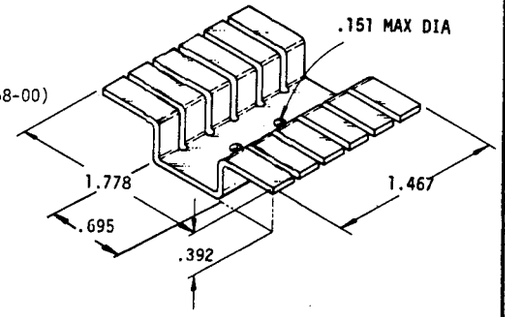

TO-220 TRANSISTOR

214-2957-00 CC: F+
Aluminum, Black Anodize

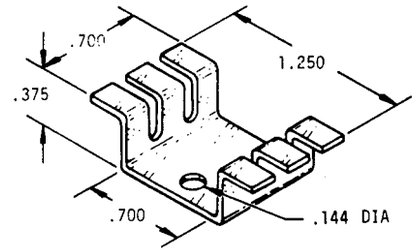

POWER TRANSISTOR

214-3309-00 CC: F
Aluminum, Black Anodize

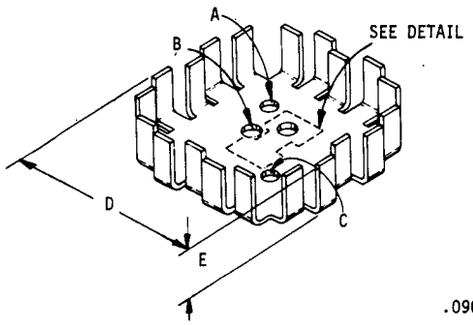

DETAIL 214-3439-00

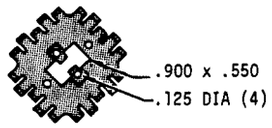

.090 ALUMINUM, BLACK ANODIZE

PART NUMBER	HOLE DIA A	HOLE DIA B	C BORE C	D	E	*θCA (C/W)	CC
214-1459-00	.166	.203	.312	3.125	1.000	4.3	
214-1460-00	.166	.203	.312	2.500	.900	5.5	J+
214-0559-01	.250	.203	.312	1.780	1.000	7.2	
214-0559-02	.250	.203	.312	1.780	1.000		I+
214-3438-00	.375	.2502	.437	2.500	.900		
214-3439-00				2.500	.900		

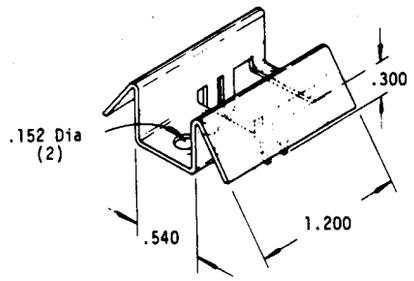

POWER TRANSISTOR

214-2418-00 CC: G
.040 Aluminum, Nickel Pl.

HEAT SINKS (CONT)

5

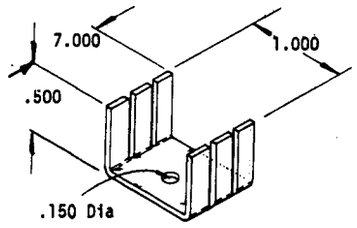

TO-220 TRANSISTOR
214-1967-00 CC: F-
Aluminum, Black Anodize
*θ CA 25° C/W

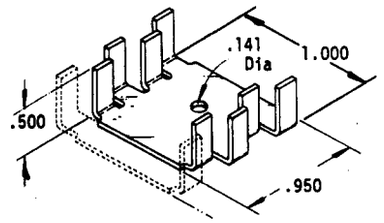

TO-220 TRANSISTOR

214-1692-01	CC: H	One Hole
214-1692-00	G	Includes Dotted Area

Aluminum, Black Anodize
*θ CA 21° C/W

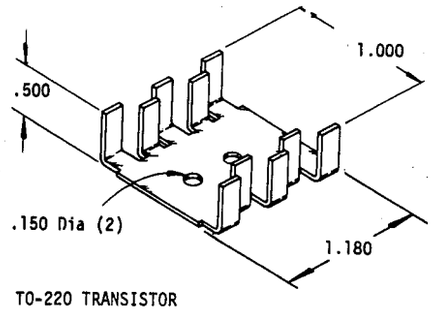

TO-220 TRANSISTOR
214-1914-00 CC: F
.040 Aluminum, Black Anodize
*θ CA 21° C/W

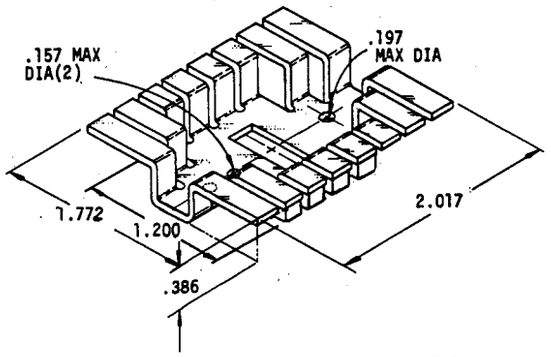

TO-3 TRANSISTOR
214-2954-00 CC: G+
Aluminum, Black Anodize
*θ CA = 7.5° C/W

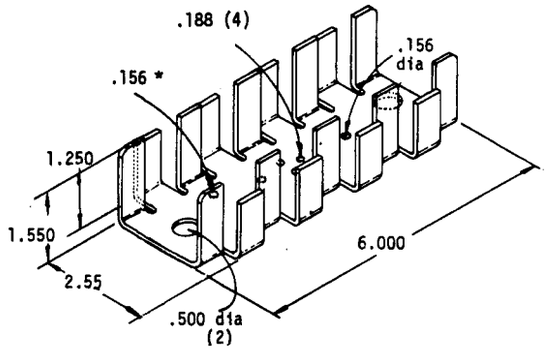

TO-3 TRANSISTOR
214-2613-00 CC: K-
Al Extrusion (251-0072-00)
214-2613-01 * Hole Moved CC: J+

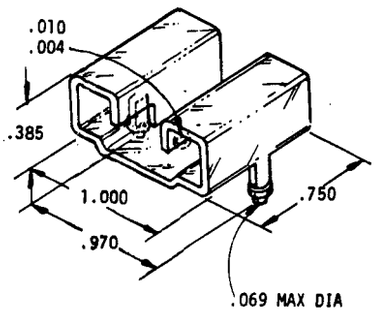

TO-220 TRANSISTOR
214-2518-00 CC: G
Frictionfit over mounting tab
Aluminum, Black Anodize *θ CA 20° C/W

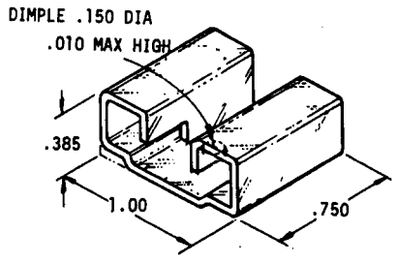

TO-220 TRANSISTOR
214-2518-01 CC: F
Frictionfit over mounting Tab
Aluminum, Black Anodize
*θ CA 20° C/W

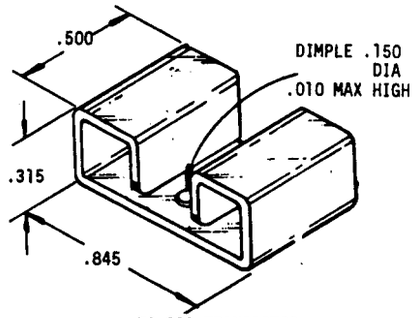

TO-220 TRANSISTOR
214-2811-00 CC: E
Frictionfit over mounting tab
Aluminum, Black Anodize
*θ CA 28° C/W

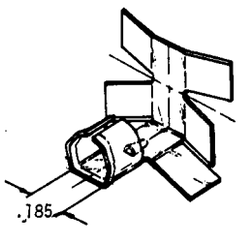

TO-92 TRANSISTOR
214-3057-00 CC: G-
Phosphor Bronze

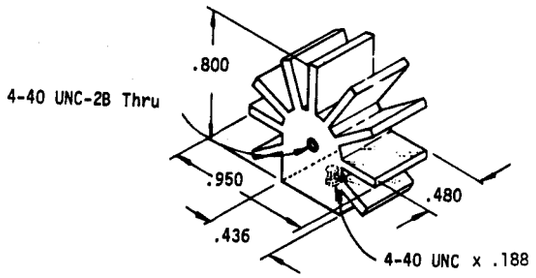

(2) TO-202 TRANSISTORS
214-2867-00 CC: K
Aluminum Extrusion, Black Anodize (251-1580-00)

TO-5 TRANSISTOR
214-2496-00 CC: E
Aluminum, Chromate Conversion
*θ CA 60° C/W

*Thermal Resistance Symbols: θCE = Thermal Resistance Device Case to External Heat Sink.
θCA = Thermal Resistance Device Case to Ambient Environment.

HEAT SINKS (CONT)

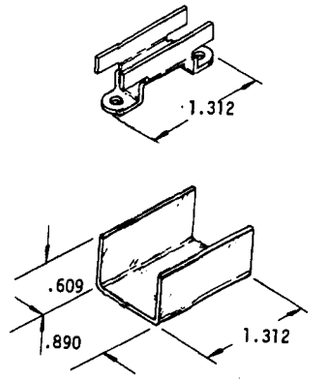

TO-66 TRANSISTOR
214-1199-00 CC: I-
.062 Aluminum, Black Anodized
*θ CA 11° C/W

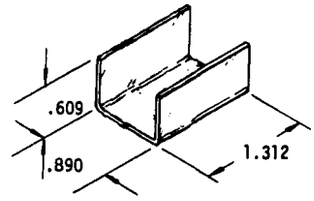

TO-66 TRANSISTOR
214-1504-00 CC: I
.062 Aluminum, Black Anodize
*θ 14° C/W

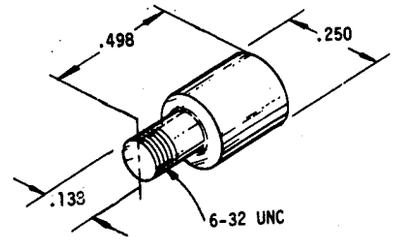

TO-8 TRANSISTOR
214-1651-01 CC: E
Copper

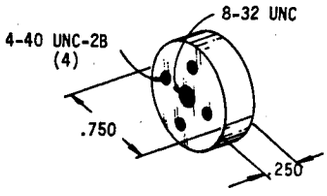

TRANSISTOR H.S.
214-2944-00 CC: J-
Aluminum (251-0223-00)

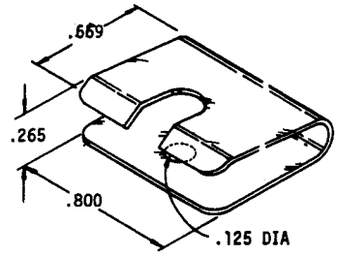

TO-39 TRANSISTOR
214-2746-00 CC: K RC: 3F
.016 Aluminum, Etch & Chromate
Conversion

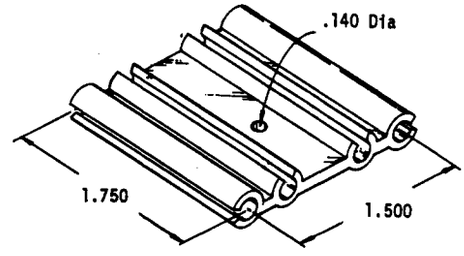

TO-220 TRANSISTOR
214-2948-00 CC: I
Aluminum Extrusion (251-1598-00)

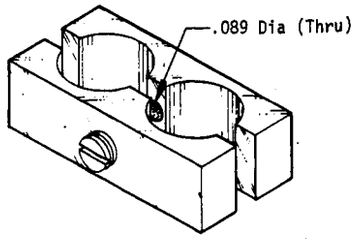

DUAL TO-18 COVER, HALF TRANSISTOR
200-0945-00 CC: F- RC: 5A
Half
200-0945-01 CC: E-
Half (w/2-56 UNC-2B)
Aluminum

TEMPERATURE STABILIZER

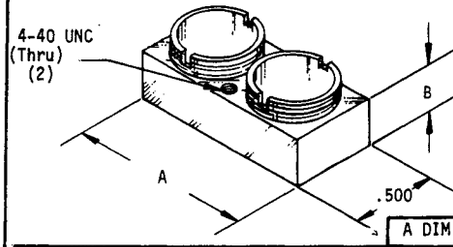

			A DIM	B DIM
TO-5 TRANSISTOR	214-0798-00	M-	1.250	.375
	214-1580-00	M	1.250	.375
TO-18 TRANSISTOR	214-0818-00	K+	1.000	.200

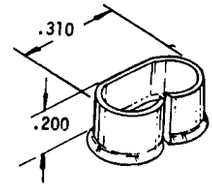

(2) TO-92 TRANSISTORS
214-1916-00 CC: B+
Brass

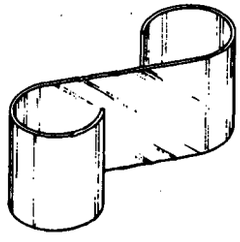

TO-18 TEMPERATURE STABILIZER
200-1673-00 CC: D-
.009 Beryllium Copper, Cd Pl

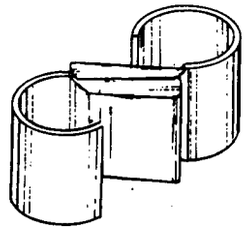

TO-18 TEMPERATURE STABILIZER
200-1167-00 CC: H
.010 Beryllium Copper, Cd Pl
Thermal Equalizer

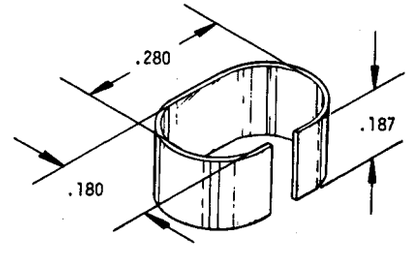

TEMPERATURE STABILIZER
214-0973-00 CC: C
.007 Copper Beryllium, Cd Pl

†† For Reliability Codes, See Page 5-6.

HEAT SINKS (CONT)

5

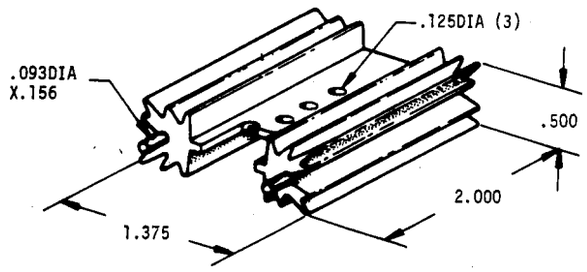

214-3429-00 CC: H-
For TO-220 and TO-202 Cases
Aluminum, Black Anodize

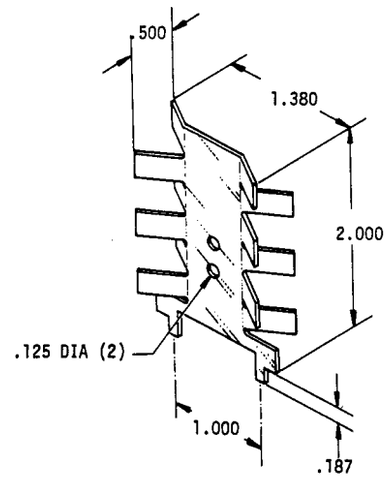

214-1815-00 CC: --
For TO-202 Case
Aluminum, Black Anodize

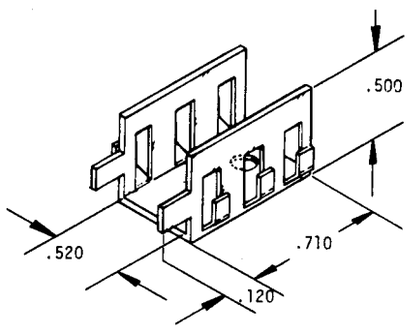

TO-220 TRANSISTOR
214-3036-00 CC: E+
Aluminum, Black Anodize

COST CODE

(CC COLUMN)

CODE	≈ VALUE with -	≈ VALUE no suffix	≈ VALUE with +
A	.2¢	.5¢	.75¢
B	1.25¢	1.5¢	2¢
C	2.5¢	3¢	3.75¢
D	4.25¢	5¢	6¢
E	7¢	8¢	10¢
F	13¢	15¢	18¢
G	22¢	25¢	35¢
H	40¢	50¢	60¢
I	65¢	75¢	$1
J	$1.25	$1.50	$2
K	$2.50	$3	$3.75
L	$4.25	$5	$6
M	$7	$8	$10
N	$13	$15	$18
O	$22	$25	$35+

NOTE: Costs may vary from order to order due to order quantities, vendor, etc.

†† CATALOG RELIABILITY CODES

USAGE/YR	CODE
≥10	1
≥100	2
≥1 000	3
≥10 000	4
≥100 000	5
≥1 000 000	6
≥10 000 000	7

FAILURE FREQ	CODE		%/YR (median)
1/100 000	A	=	.001
1/50 000	B	=	.002
1/20 000	C	=	.005
1/10 000	D	=	.01
1/5 000	E	=	.02
1/2 000	F	=	.05
1/1 000	G	=	.1
1/500	H	=	.2
1/200	I	=	.5
1/100	J	=	1.0+

For further explanation of this code, see page 0-25.

HEAT SINKS (CONT)

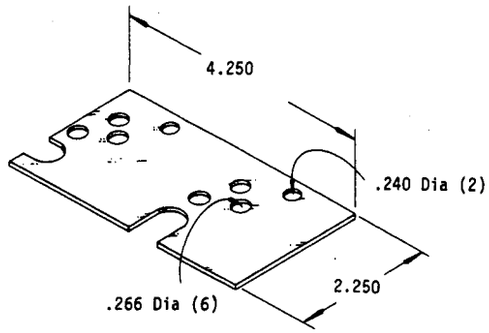

214-1598-00 CC- I+
TO-3
.125 Aluminum, Etch

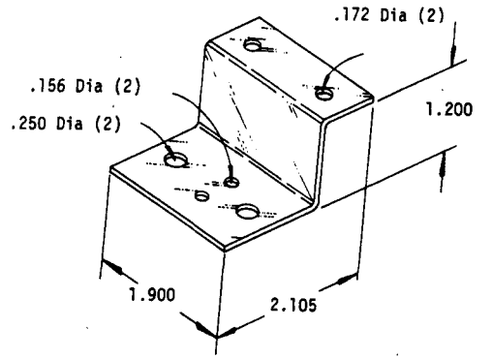

214-2224-00 CC- I-
TO-3
.080 Aluminum, Etch & Lacquer

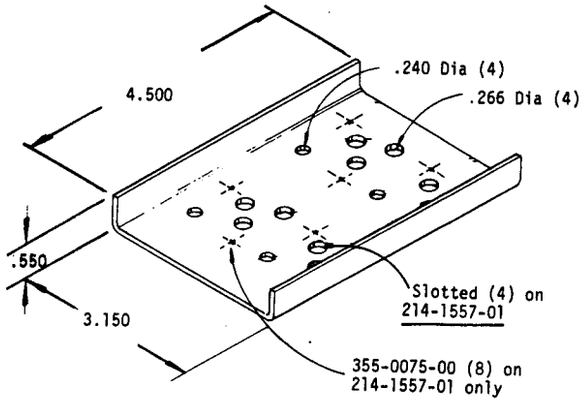

214-1557-00 CC- I+
TO-3
.080 Aluminum, Etch

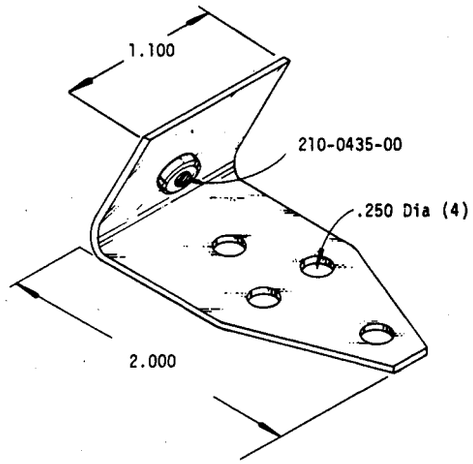

214-1536-00 CC- I+ ††RC 4E
TO-3 .063 Aluminum, Anodize

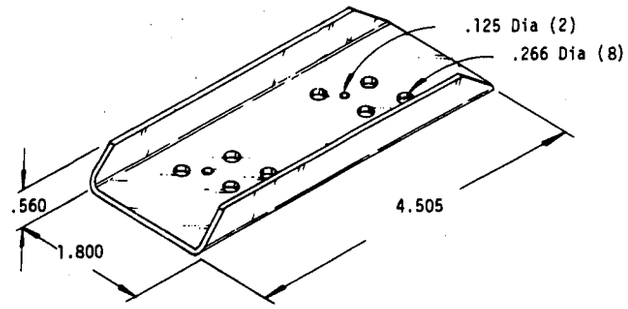

214-1550-00 CC- H
TO-3
.080 Aluminum, Etch

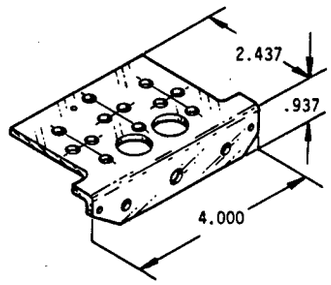

214-1388-00 CC: K-
.125 Aluminum (251-0072-XX)

HEAT SINKS (CONT)

5

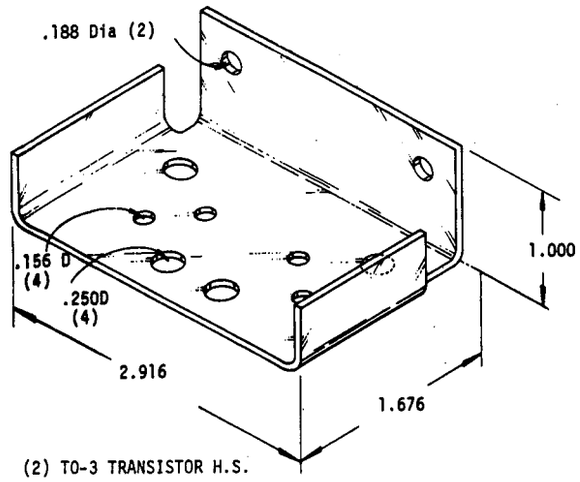

(2) TO-3 TRANSISTOR H.S.
214-1599-00 CC: J
.125 Aluminum, Etch & Chromate Conversion

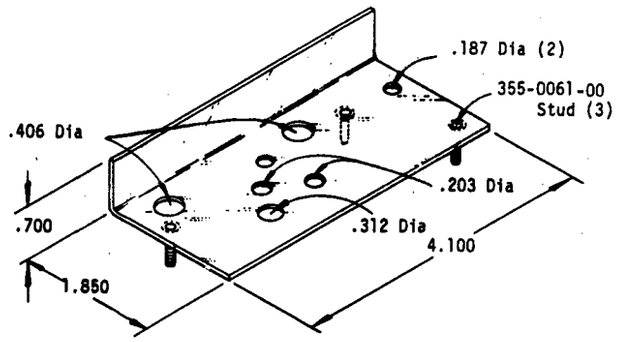

TRANSISTOR H.S.
214-2280-00 CC: J
.050 Aluminum, Etch & Chromate Conversion

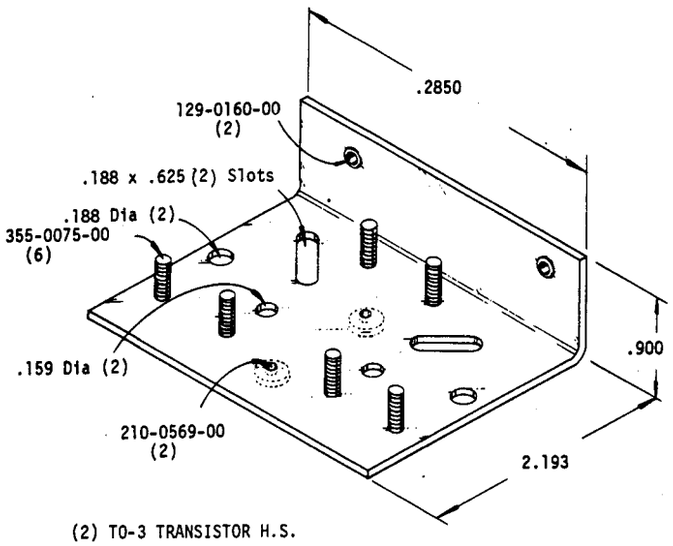

(2) TO-3 TRANSISTOR H.S.
214-1860-00 CC: K-
.090 Aluminum, Etch & Lacquer

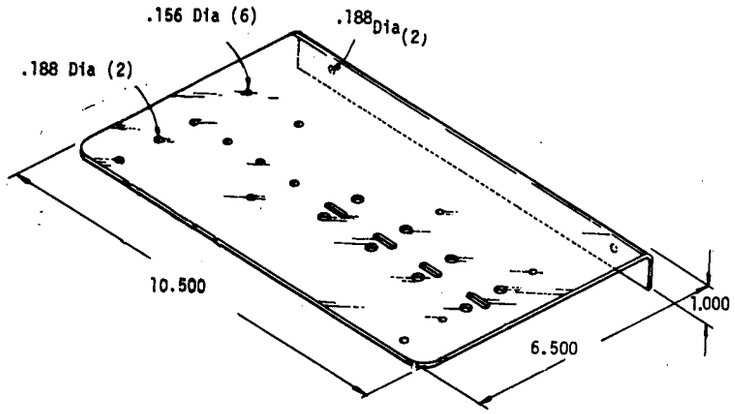

(4) TO-66 TRANSISTOR H.S.
214-1795-00 CC: K+
.125 Aluminum (251-0038-00)

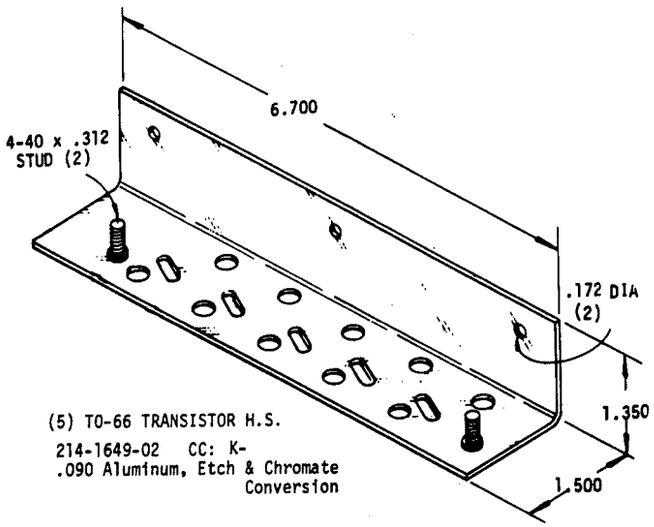

(5) TO-66 TRANSISTOR H.S.
214-1649-02 CC: K-
.090 Aluminum, Etch & Chromate Conversion

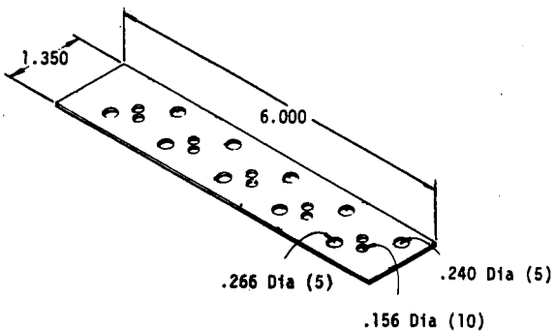

(5) TO-66 TRANSISTOR H.S.
214-1649-00 CC: H
.080 Aluminum, Etch

HEAT SINKS (CONT)

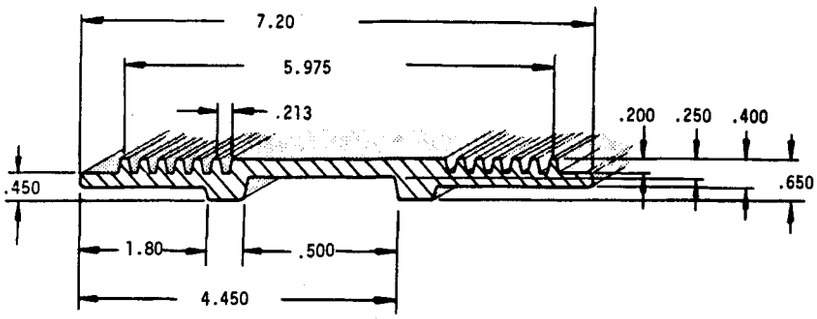

(5) TO-220 TRANSISTOR H.S.
214-2874-00 CC: L 4.750 Long
Aluminum Extrusion (251-1589-00)
Black Anodize

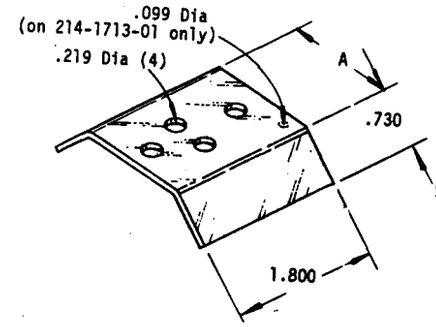

TO-3 TRANSISTOR H.S.
214-1713-00 CC: I+ A = 1.330
214-1713-01 CC: I+ A = 1.300
.090 Aluminum, Black Anodize

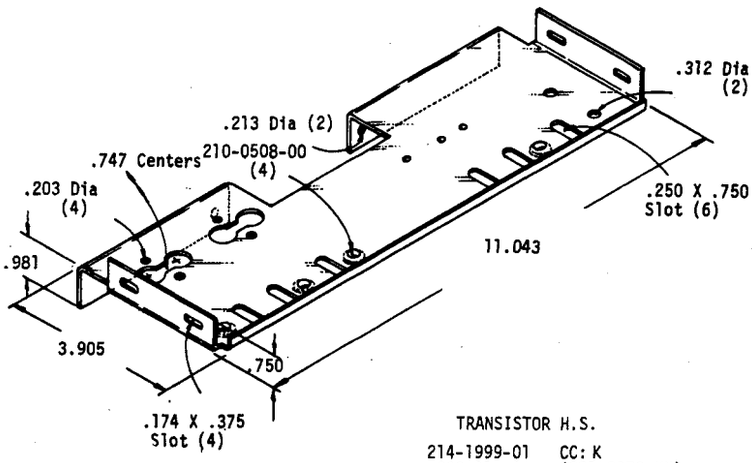

TRANSISTOR H.S.
214-1999-01 CC: K
.080 Aluminum (251-0078-XX)

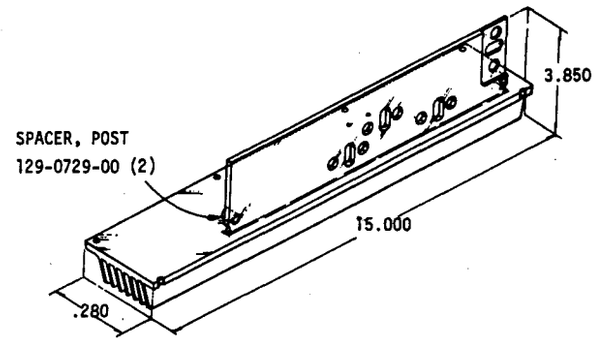

(4) TO-3 CIRCUIT BOARD H.S.
214-2777-00 CC: N+
Aluminum Extrusion (251-1545-00)
Etch & Chromate Conversion

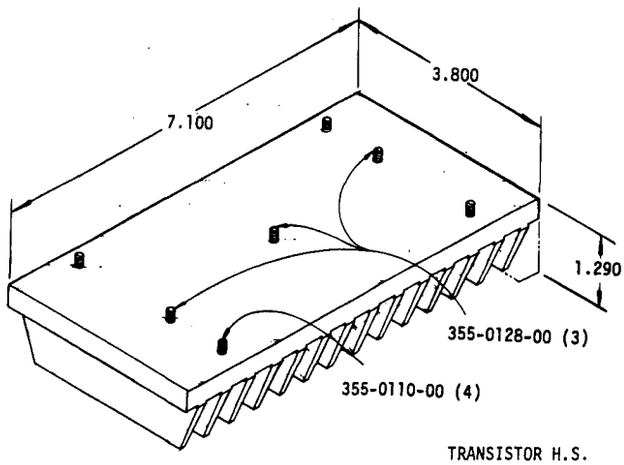

TRANSISTOR H.S.
214-2330-00 CC: M-
Aluminum Extrusion (251-1377-00)

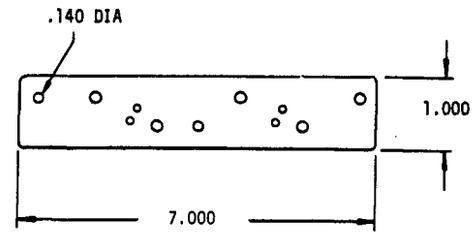

(2) TO-66 TRANSISTOR H.S.
214-1880-00 CC: I
.063 Aluminum (251-0077-XX)

HEAT SINKS (CONT)

5

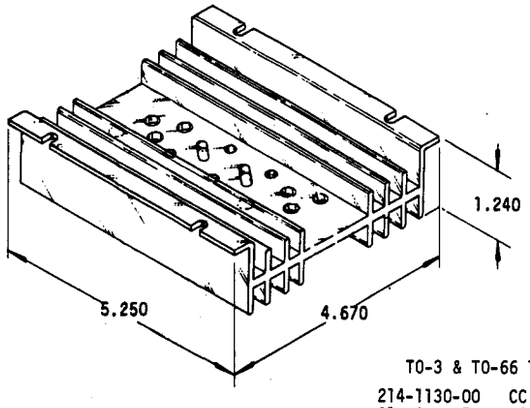

TO-3 & TO-66 TRANSISTOR H.S.
214-1130-00 CC: K+
Aluminum Extrusion (251-1038-00)

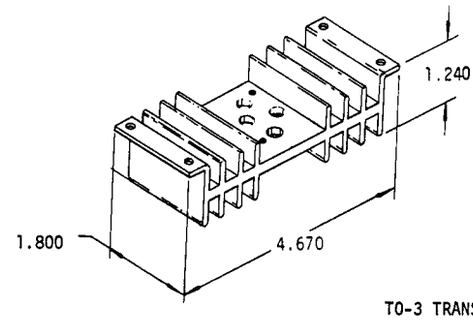

TO-3 TRANSISTOR H.S.
214-2888-00 CC: L
Aluminum Extrusion (251-1038-00)
Etch & Chromate Conversion

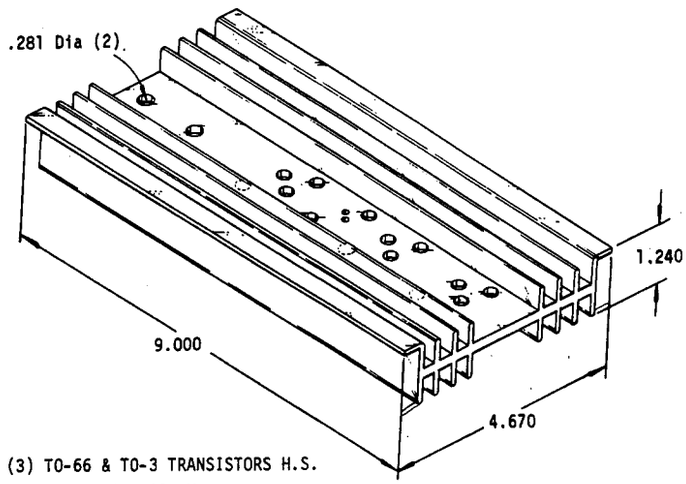

(3) TO-66 & TO-3 TRANSISTORS H.S.
214-2225-00 CC: M
Aluminum Extrusion (251-1038-00)

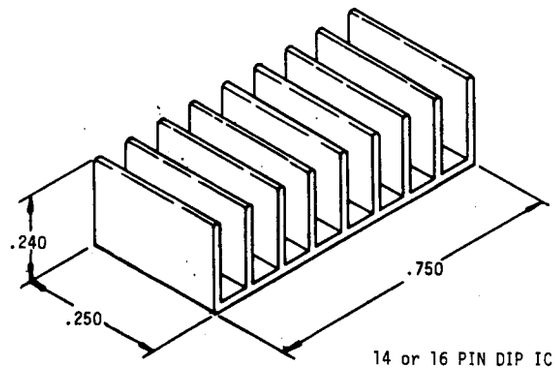

14 or 16 PIN DIP IC H.S.
214-2868-00 CC: E+
Aluminum, Black Anodize

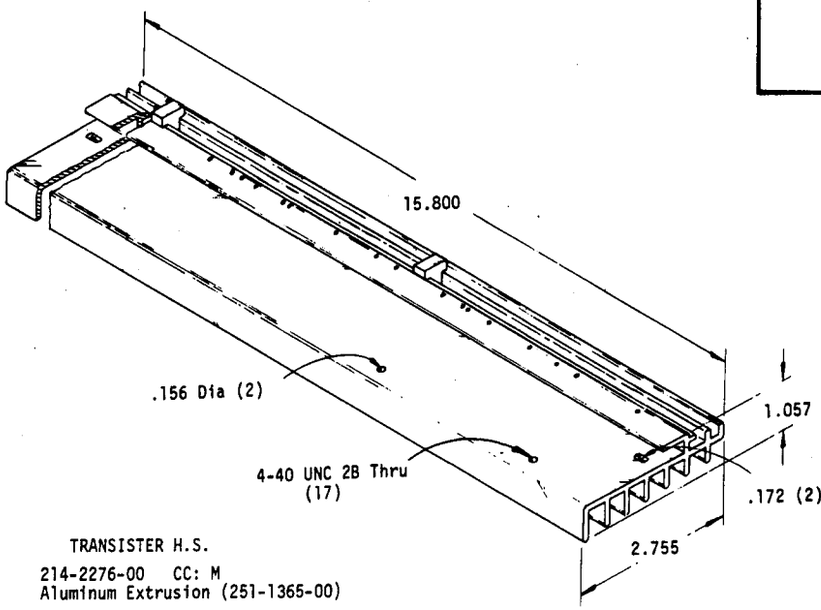

TRANSISTER H.S.
214-2276-00 CC: M
Aluminum Extrusion (251-1365-00)

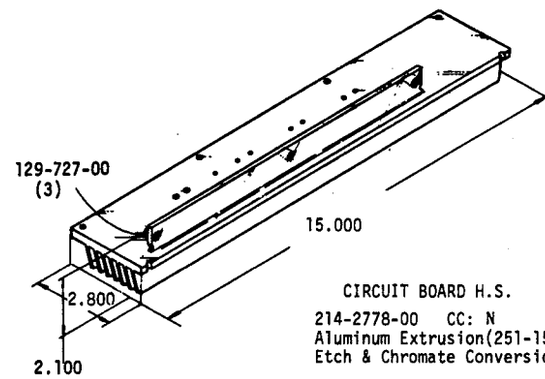

CIRCUIT BOARD H.S.
214-2778-00 CC: N
Aluminum Extrusion(251-1545-00
Etch & Chromate Conversion

HEAT SINKS (CONT)

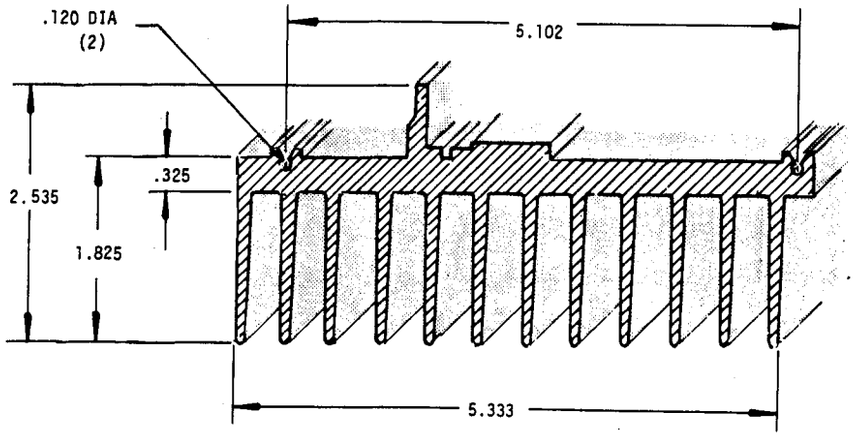

CIRCUIT BOARD H.S.
214-2612-00 CC: N ++RC 3F
8.000 Long
Aluminum Extrusion (251-1479-00)
Etch & Chromate Conversion

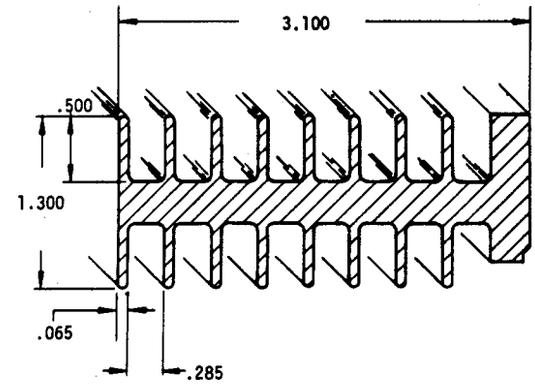

CIRCUIT BOARD H.S.
214-2801-00 CC: M+ ++RC 2H
7.700 Long
Aluminum Extrusion (251-1550-00)
Etch & Chromate Conversion

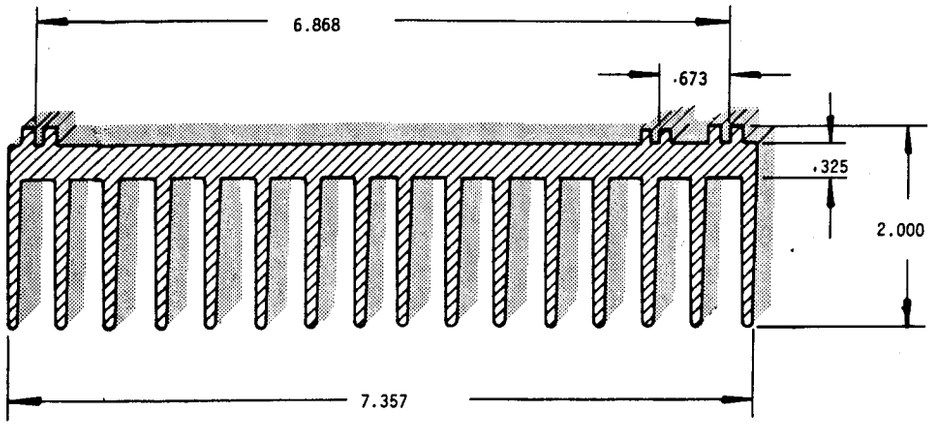

POWER SUPPLY H.S.
214-2509-00 CC: N- 8.000 Long
214-2890-00 CC: N 5.000 Long
214-3291-00 CC: F+ 8.000 Long
214-2611-02 CC: N 8.000 Long
Aluminum Extrusion (251-1455-00), Etch & Chromate Conversion

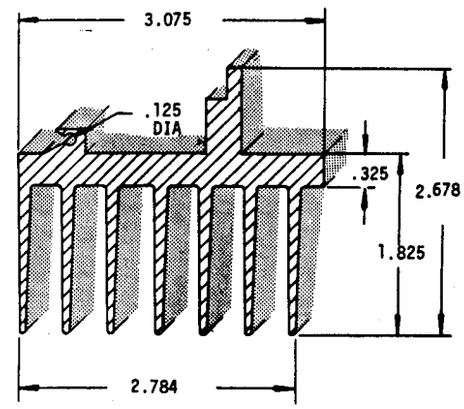

CIRCUIT BOARD H.S.
214-2508-00 CC: M+
214-2508-01 CC: M+
6.983 Long
Aluminum Extrusion (251-1454-00)
Etch & Chromate Conversion

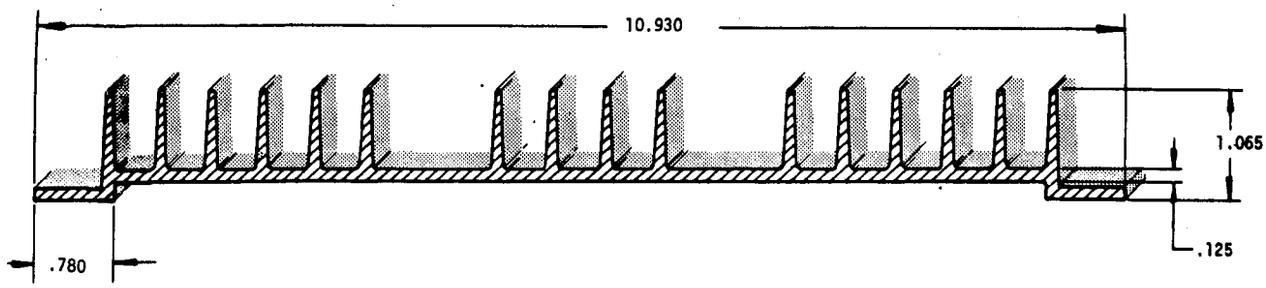

(2) TO-220 TRANSISTOR H.S.
214-2516-00 CC: M+
4.800 Long
Aluminum Extrusion (251-1457-00)
Etch & Chromate Conversion

++ FOR RELIABILITY CODES, SEE PAGE 5-6.

HEAT SINKS (CONT)

5

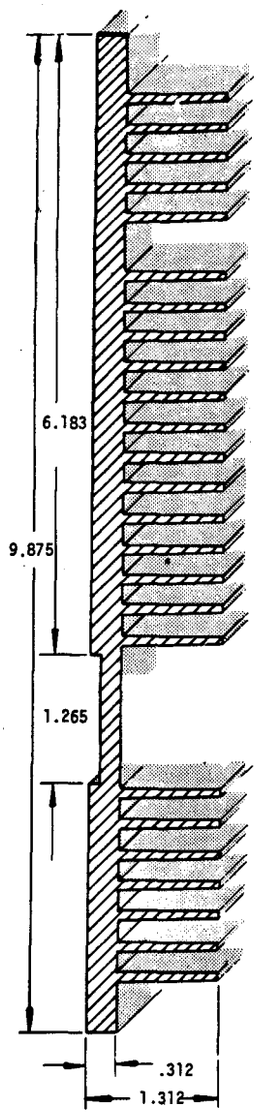

(6) TO-3 TRANSISTOR H.S.
214-2049-01 CC: 0 ††RC 3G
Aluminum Extrusion (251-1320-00)
Etch & Chromate Conversion

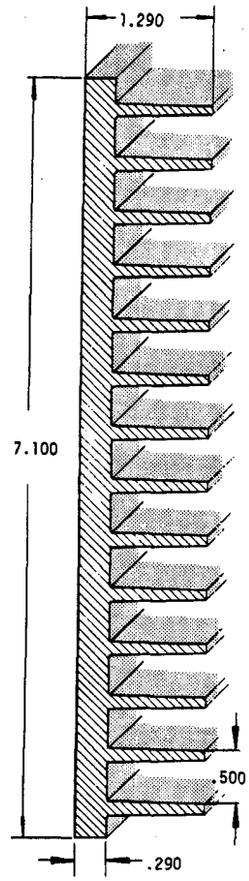

POWER SUPPLY H.S.
214-2815-00 3.125 Long
Etch & Lacquer

214-2540-02 CC: M .500 Long
Etch & Chromate Conversion
214-3109-00 CC: M 6.375 Long
Etch & Chromate Conversion
Aluminum Extrusion (251-1377-00)

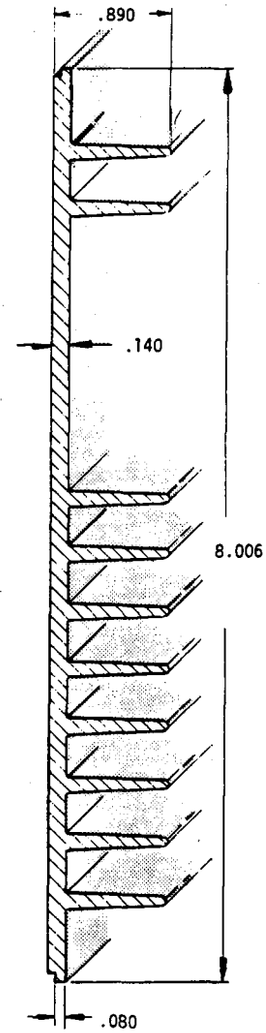

POWER SUPPLY H.S.
214-1958-00 CC: N-
6.430 Long
Aluminum Extrusion (251-1199-00)
Etch & Chromate Conversion

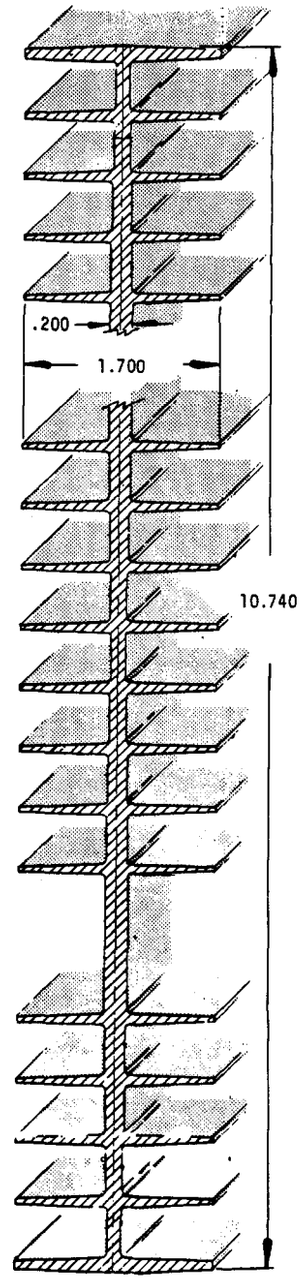

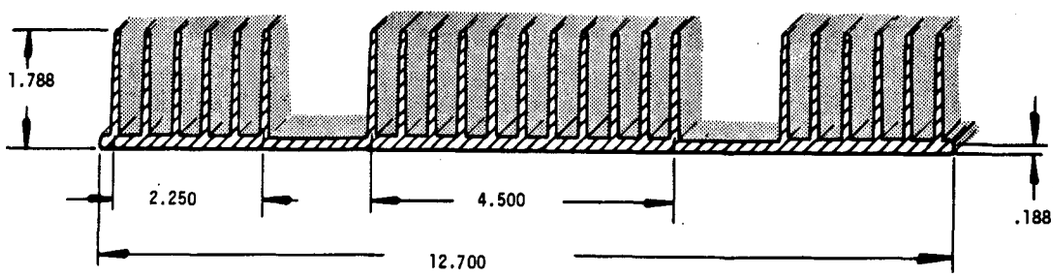

POWER SUPPLY H.S.
214-2348-00 CC: 0+
22.000 Long
Aluminum Extrusion (251-1366-00)
Etch & Lacquer

(4) TO-3 TRANSISTOR H.S.

PART NUMBER	CC	LENGTH
214-1766-00	0	6.410 (Black)
214-1781-00	N	5.000 (TV Gray)
214-1956-00	0	12.000 (TV Gray)
214-1666-00	N	1.429

Etch & Lacquer

Aluminum Extrusion (251-1048-00)
Vinyl Enamel

†† FOR RELIABILITY CODES, SEE PAGE 5-6.

HEAT SINKS (CONT)

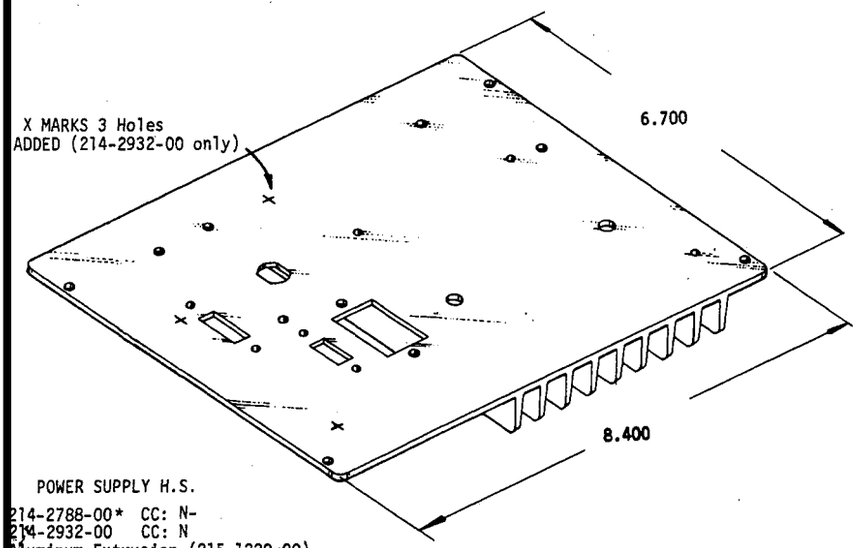

POWER SUPPLY H.S.
214-2788-00* CC: N-
214-2932-00 CC: N
Aluminum Extrusion (215-1220-00)
Etch & Chromate Conversion

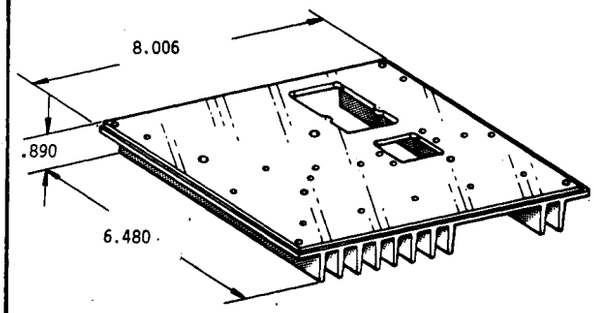

POWER SUPPLY H.S.
214-1623-01 CC: N-
Aluminum Extrusion (251-1199-00)

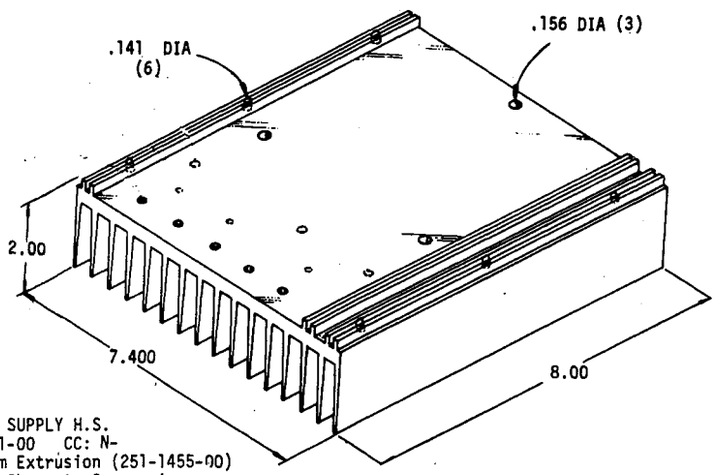

POWER SUPPLY H.S.
14-2611-00 CC: N-
luminum Extrusion (251-1455-00)
Etch & Chromate Conversion

14-2611-01 CC: N
(Some holes changed)

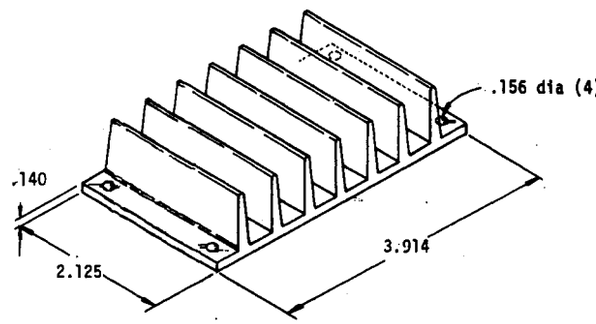

TRANSISTOR H.S.
214-2796-00 CC: L
Aluminum Extrusion (251-1549-00)

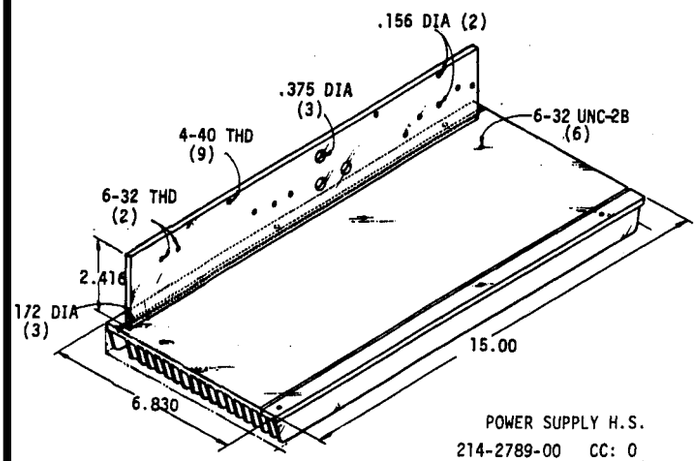

POWER SUPPLY H.S.
214-2789-00 CC: O
Aluminum Extrusion (251-1507-00)

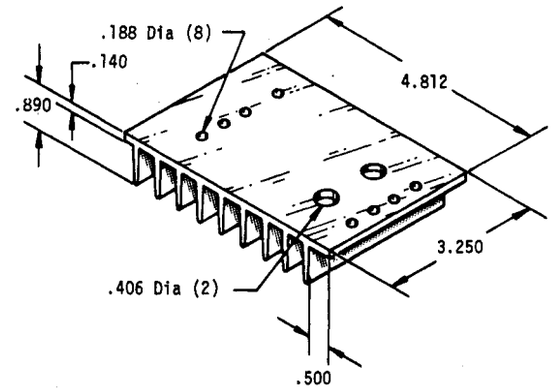

POWER SUPPLY H.S.
214-2247-00 CC: L
Aluminum Extrusion (25

* Safety controlled

HEAT SINKS (CONT)

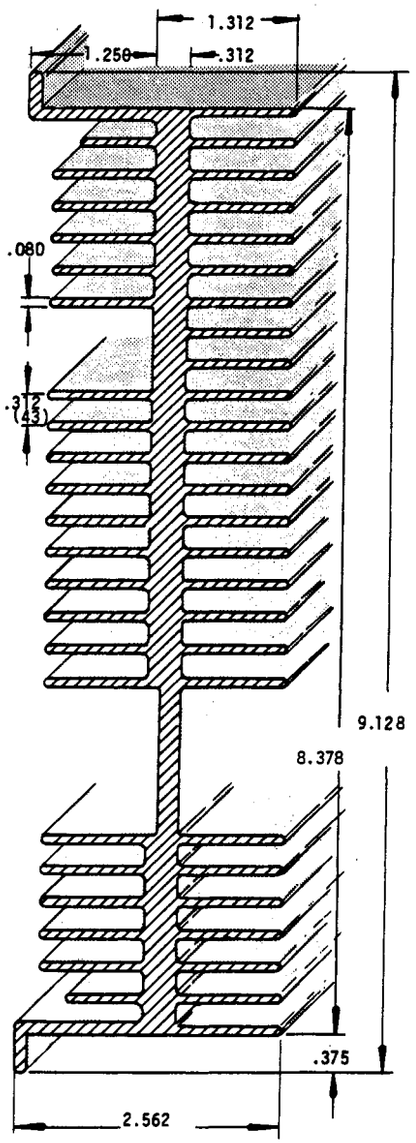

TRANSISTOR H.S.

214-2474-00 CC: 0 10.125 Long
Aluminum Extrusion (251-1433-00)
Etch & Chromate Conversion

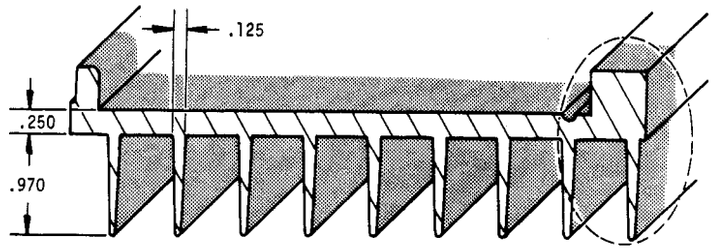

Material Removal Detail (251-1611-00 Aluminum Extrusion)

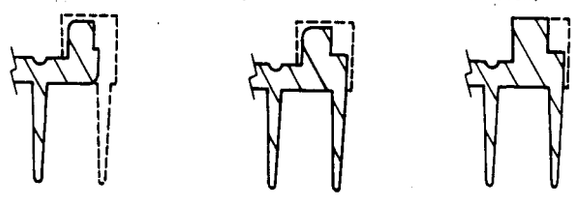

DETAIL A DETAIL B DETAIL C

PART NUMBER	HEIGHT	WIDTH	LENGTH	DETAIL	CC
214-3000-00	1.610	5.306	11.050	A	0
214-3000-01	1.610	5.306	11.050	A	0-
214-3001-01	1.610	5.306	11.050	A	N+
214-3002-00	1.610	5.425	11.075	B	0+
214-3002-01	1.610	5.425	11.075	B	0-
214-3003-00	1.640	5.425	5.575	C	N+
214-3003-01	1.640	5.425	5.575	C	M+
214-3004-00	1.640	5.425	5.575	C	N+
214-3004-01	1.640	5.425	5.575	C	N+

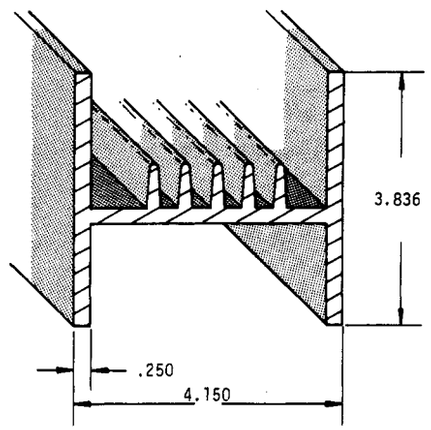

214-3052-00 CC: M+
Aluminum Extrusion (251-1624-00)
Etch & Chromate Conversion

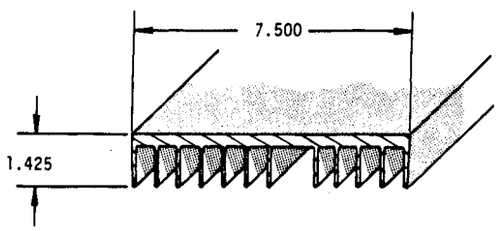

POWER SUPPLY H.S.

214-3022-01 CC: 0 10.250 Long
214-3037-01 CC: 0 15.000 Long
Aluminum Extrusion (251-1622-00)

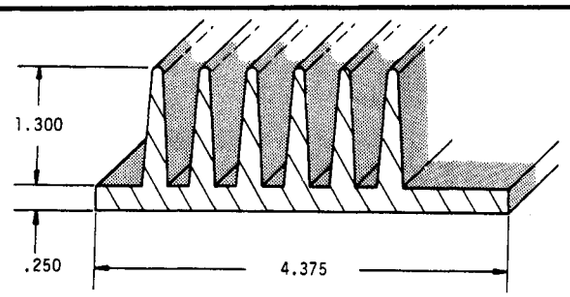

214-3126-00 CC: L+
Aluminum Extrusion (251-1656-00)
Etch & Chromate Conversion

HEAT SINKS (CONT)

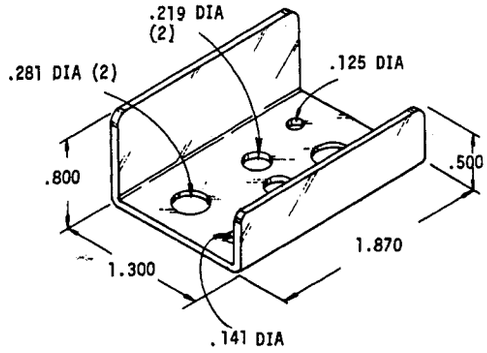

TO-3 DIODE
214-2731-00 CC: I-
.080 Aluminum (251-0078-00)

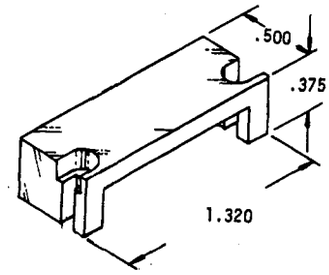

MICRO CIRCUIT H.S.
214-2342-00 CC: N-
Aluminum (251-0015-00)

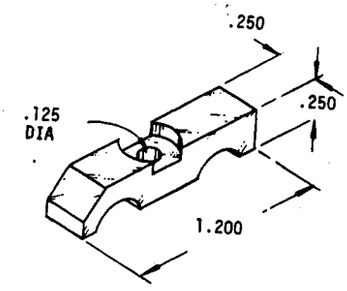

DIODE H.S.
214-2322-00 CC: J-
Aluminum (251-0005-00)
Etch & Chromate Conversion

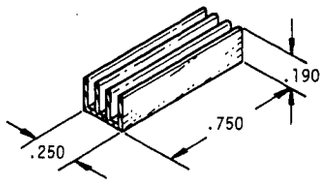

MICROCIRCUIT H.S.
FOR 14 or 16 PIN DIP
214-3238-00 CC: G
Aluminum, Blk Anodize

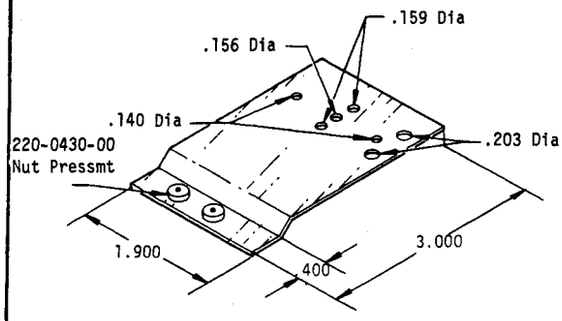

MICROCIRCUIT H.S.
214-2416-00 CC: J-
Aluminum (251-0073-XX)
Etch & Chromate Conversion

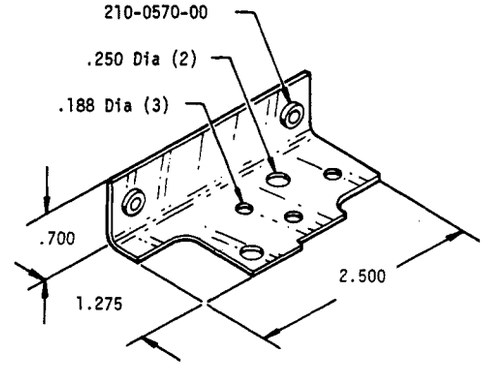

DIODE H.S.
214-2951-00 CC: I
Aluminum (251-0071-XX)
Etch & Chromate Conversion

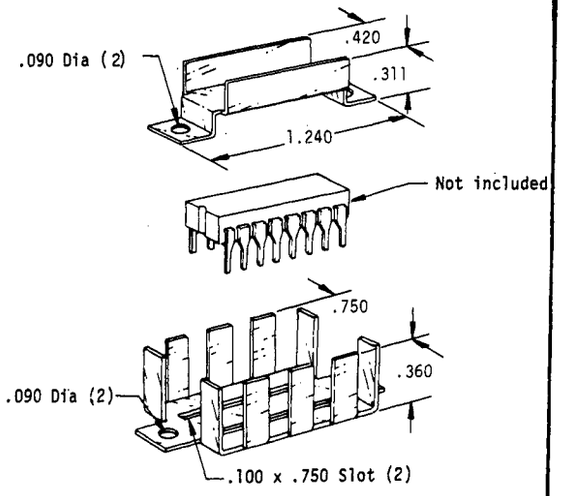

MICROCIRCUIT H.S.
FOR 14 or 16 PIN DIP
214-3334-00 CC: I+
Aluminum, Hard Anodize

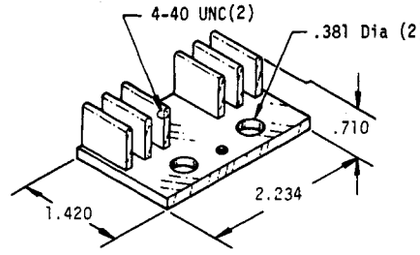

TRANSISTOR H.S.
214-3315-00 CC: J
Aluminum, Blk Anodize

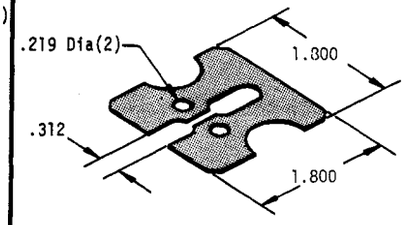

MICROCIRCUIT H.S.
214-1990-00 CC: I-
Aluminum (251-0076-XX)
Hard Anodize, Black

HEAT SINKS (CONT)

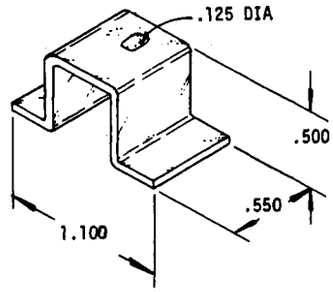

TRANSISTOR, H.S.
214-1845-01 CC: D+
.063 Aluminum (251-0077-00)
Etch & Lacquer

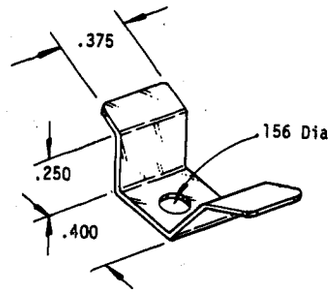

TO-5 TRANSISTOR, H.S.
214-1519-00 CC: I
.010 CU-BE (251-0462-XX)
Bright Dip

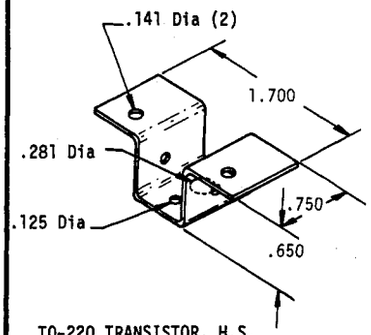

TO-220 TRANSISTOR, H.S.
214-2980-00 CC: I-
.050 Aluminum (251-0073-00)
Etch & Chromate Conversion

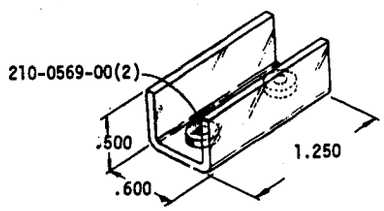

(2) TO-202 TRANSISTOR, H.S.
214-2995-00 CC: H+
.063 Aluminum (251-0077-XX)

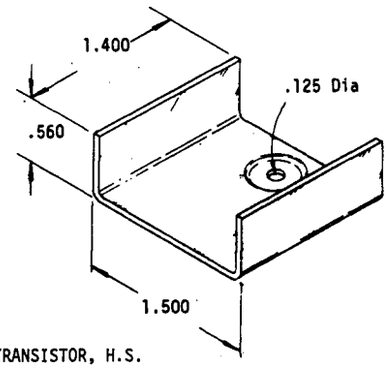

TRANSISTOR, H.S.
214-1671-00 CC: H-
.050 Aluminum (251-0073-XX)
Etch & Lacquer

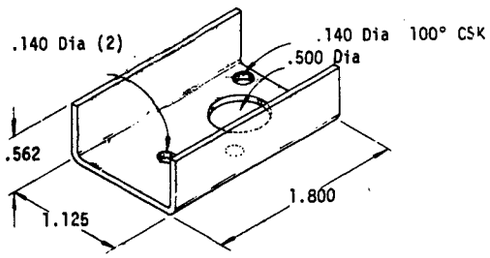

TRANSISTOR, H.S.
214-1882-00 CC: K-
.063 Aluminum (251-0077-XX)
Black Anodize

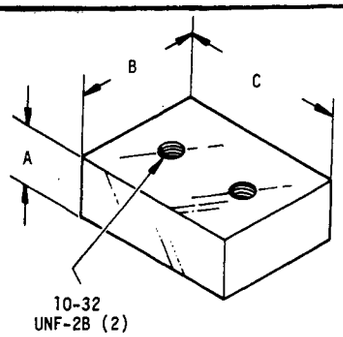

PART NUMBER	A	B	C	MATERIAL
214-2770-00	.250	.375	1.000	251-0253-00
214-3094-00	.500	1.100	1.400	251-0145-00

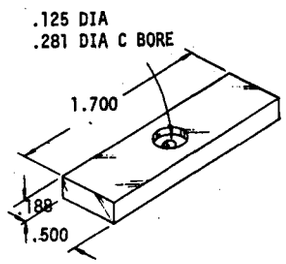

TO-202 TRANSISTOR, H.S.
214-3015-00 CC: H+
Aluminum (251-0087-00)

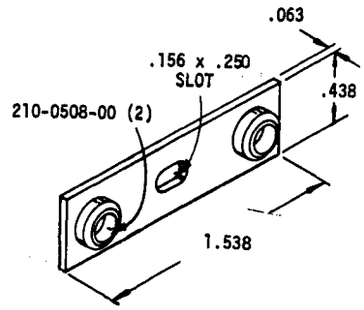

TRANSISTOR, H.S.
214-2215-00 CC: H
Aluminum (251-0077-XX)

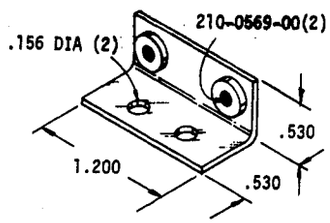

CIRCUIT BOARD H.S.
214-2712-00
.063 Aluminum (251-0077-XX)

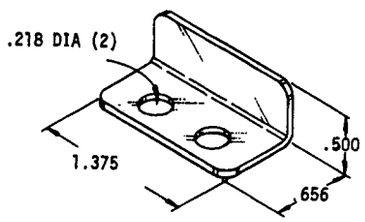

TRANSISTOR H.S.
214-1731-00 CC: G+
.040 Aluminum (251-0076-XX)

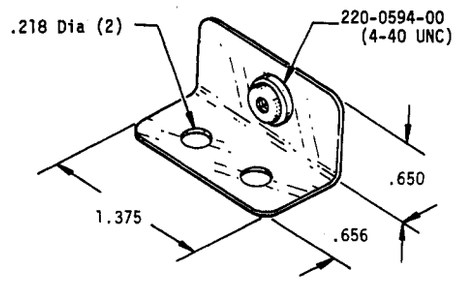

TRANSISTOR, H.S.
214-1731-01 CC: I
.040 Aluminum (251-0076-XX)
Etch & Chromate Conversion

HEAT SINKS (CONT)

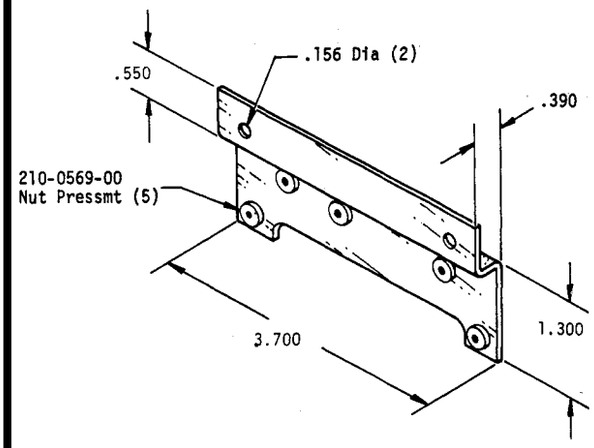

ELECTRICAL, H.S.
214-2824-00 CC: J+
.080 Aluminum (251-0077-XX)
Etch & Chromate Conversion

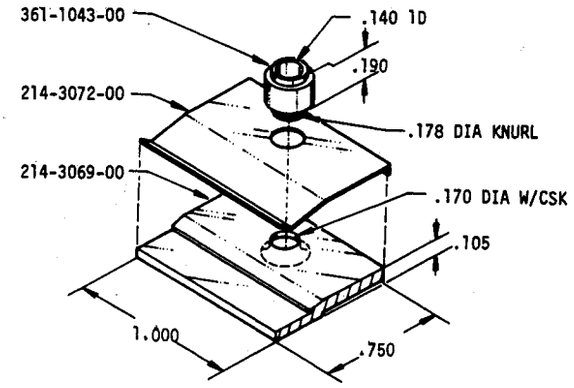

RESISTOR (Assembly), H.S.
214-3069-01 CC: J-

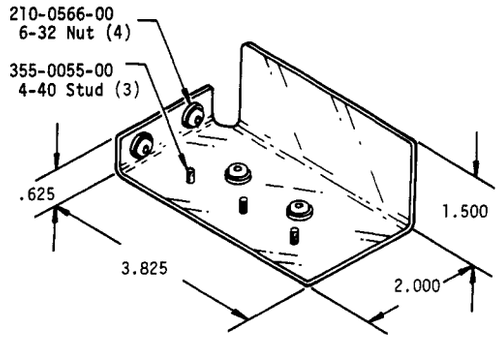

TRANSISTOR, H.S.
214-3087-00 CC: K-
Aluminum (251-0078-XX)
Etch & Chromate Conversion

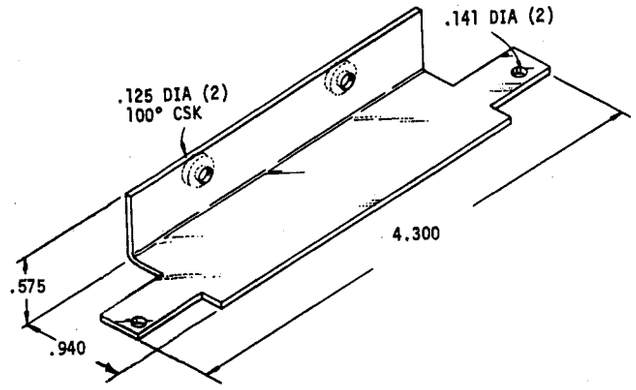

ELECTRICAL, H.S.
214-2913-00 CC: I
.050 Aluminum (251-0073-XX)
Etch & Chromate Conversion

COST CODE

(CC COLUMN)

CODE	≈ VALUE with -	≈ VALUE no suffix	≈ VALUE with +
A	.2¢	.5¢	.75¢
B	1.25¢	1.5¢	2¢
C	2.5¢	3¢	3.75¢
D	4.25¢	5¢	6¢
E	7¢	8¢	10¢
F	13¢	15¢	18¢
G	22¢	25¢	35¢
H	40¢	50¢	60¢
I	65¢	75¢	$1
J	$1.25	$1.50	$2
K	$2.50	$3	$3.75
L	$4.25	$5	$6
M	$7	$8	$10
N	$13	$15	$18
O	$22	$25	$35+

NOTE: Costs may vary from order to order due to order quantities, vendor, etc.

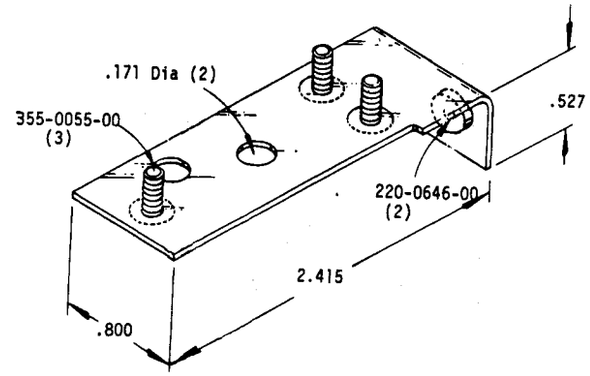

TRANSISTOR, H.S.
214-2132-00 CC: J
.063 Aluminum (251-0077-XX)
Etch & Chromate Conversion

HEAT SINKS (CONT)

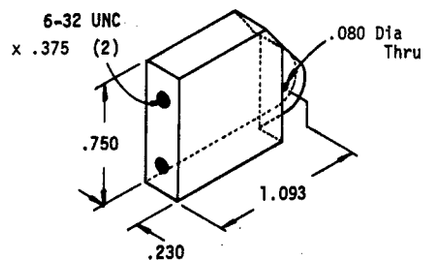

TRANSISTOR, H.S.
214-2462-00 CC: K
Aluminum (251-1273-00)

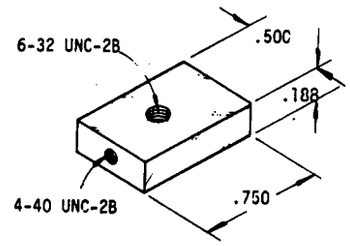

TO-127 TRANSISTOR, H.S.
214-2403-00 CC: J+
Aluminum, Etch & Lacquer

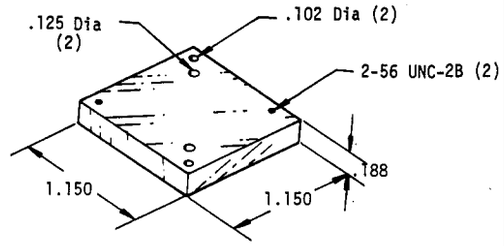

SWITCH, H.S.
214-2823-00 CC: K
Aluminum (251-1211-00)
Etch & Chromate Conversion

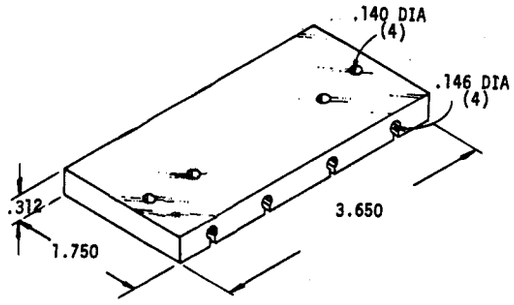

TO-220 TRANSISTOR H.S.
214-2947-00 CC: J
Aluminum Extrusion (251-1599-00)

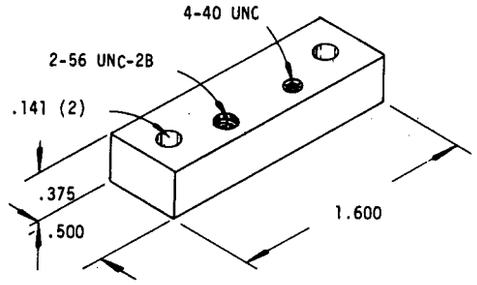

TRANSISTOR, H.S.
214-1979-00 CC: J+
Aluminum, Etch & Chromate Conversion

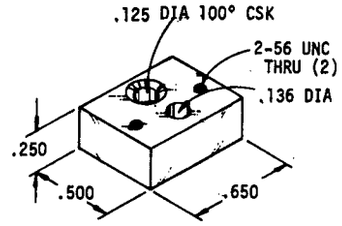

TO-202 TRANSISTOR, H.S.
214-2988-00 CC: J
Aluminum (251-1437-00)

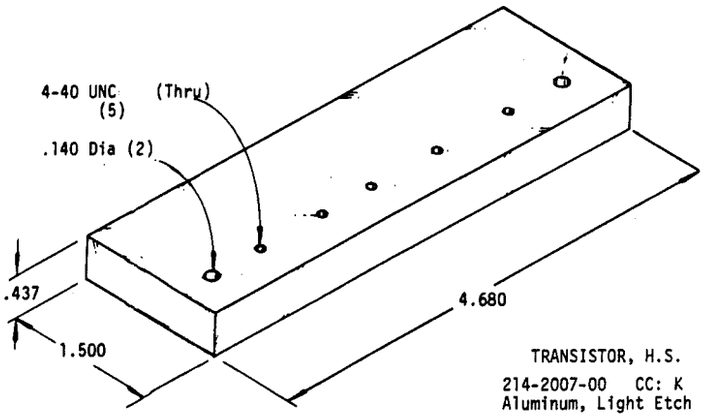

TRANSISTOR, H.S.
214-2007-00 CC: K
Aluminum, Light Etch

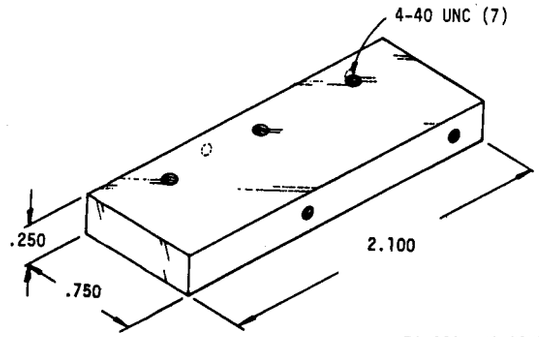

TO-220 TRANSISTOR, H.S.
214-2863-00 CC: K-
Aluminum (251-1273-00)

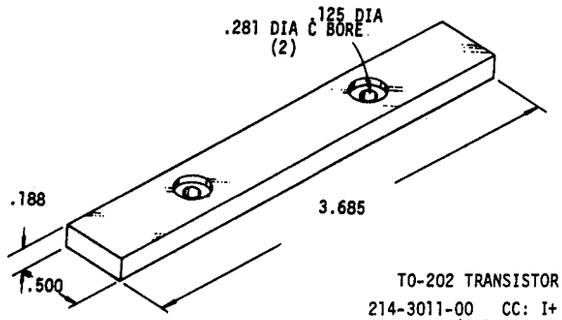

TO-202 TRANSISTOR, H.S.
214-3011-00 CC: I+
Aluminum (251-0087-00)

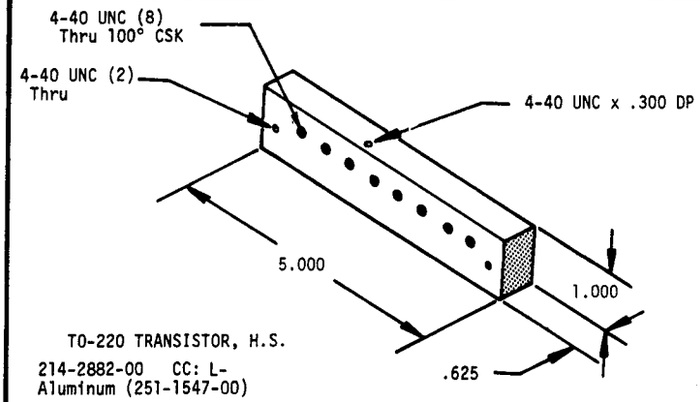

TO-220 TRANSISTOR, H.S.
214-2882-00 CC: L-
Aluminum (251-1547-00)

HEAT SINKS (CONT)

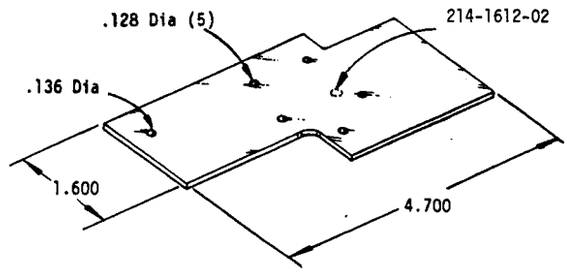

TO-5 TRANSISTOR, H.S.

214-1612-01 CC: G
.063 Aluminum (251-0180-XX)
Etch & Chromate Conversion

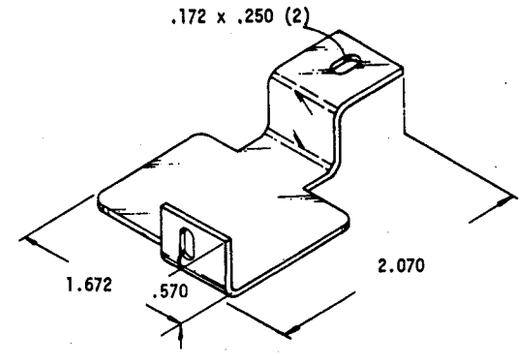

DIODE, H.S.

214-2013-00 CC: I+
.090 Aluminum (251-0070-XX)

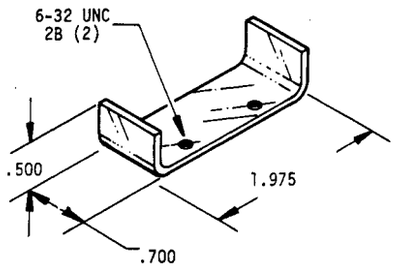

214-3313-00

.090 Aluminum (251-0070-XX)

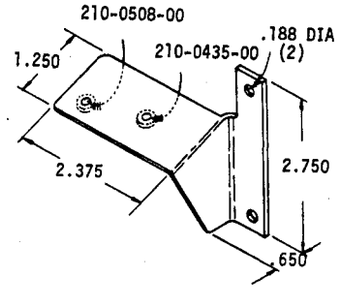

TRANSISTOR & DIODE, H.S.

214-2549-00 CC: J
.080 Aluminum (251-0078-XX)

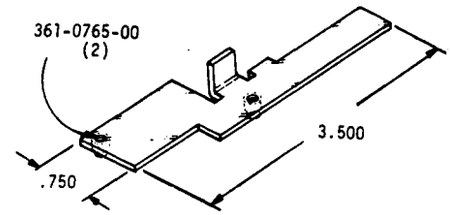

TO-39 HEAT SINK

214-2572-00 CC: I+ ++RC: 3G
.063 Aluminum (251-0077-XX)
Etch & Chromate Conversion

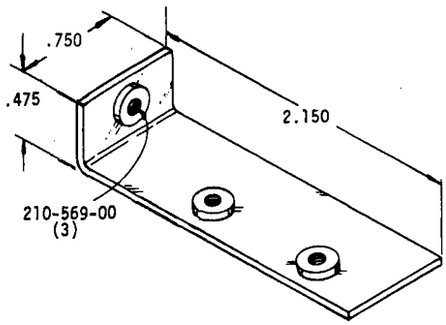

TO-202 TRANSISTOR, H.S.

214-2744-00 CC: I+
.063 Aluminum (251-0077-XX)
Etch & Lacquer

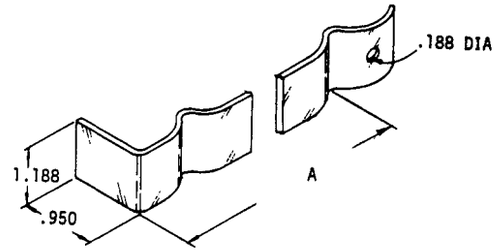

POWER SUPPLY, H.S.

PART NUMBER	CC	A DIM.
214-2343-00	J+	3.661
214-2344-00	J+	4.173

.065 Copper (251-0416-XX)

HEAT SINKS (CONT)

5

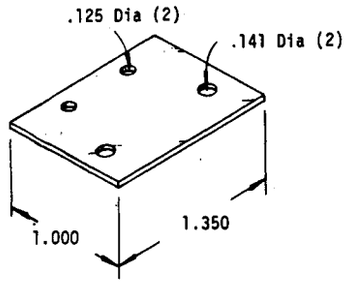

TRANSISTOR, H.S.
214-2407-00 CC: F+
.063 Aluminum (251-0180-XX)
Etch & Lacquer

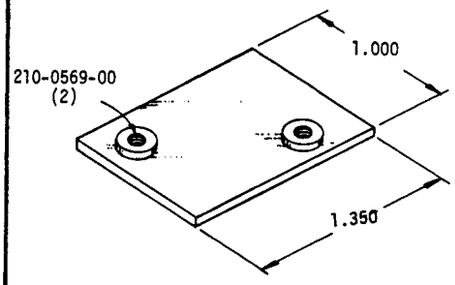

(2) TO-202 TRANSISTOR, H.S.
214-2733-00 CC: I
.063 Aluminum (251-0180-XX)
Etch & Lacquer

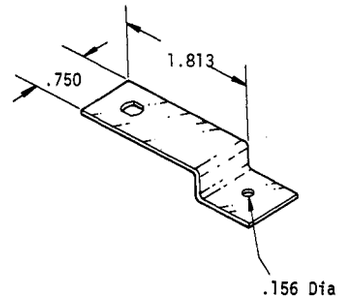

RECTIFIER, H.S.
214-1804-00 CC: H
.063 Aluminum (251-0180-XX)
Etch & Chromate Conversion

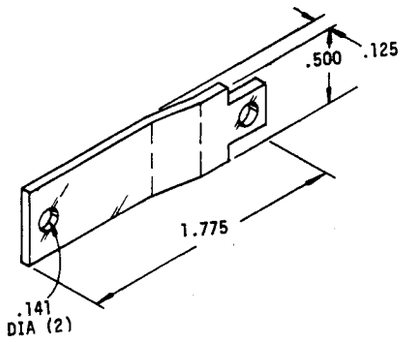

CIRCUIT BOARD, H.S.
214-2592-00 CC: H-
.100 Aluminum
Etch & Chromate Conversion

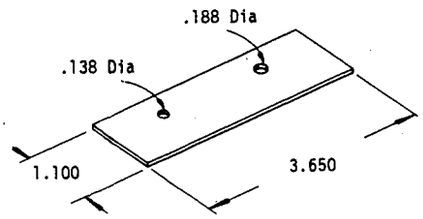

TRANSISTOR, H.S.
214-1917-00 CC: G+
.040 Aluminum (251-0076-00)
Etch & Chromate Conversion

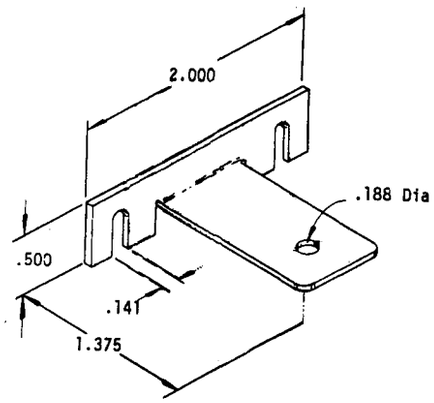

DIODE, HEAT SINK
214-1525-00 CC: I-
.063 Aluminum (251-0077-XX)
Etch & Chromate Conversion

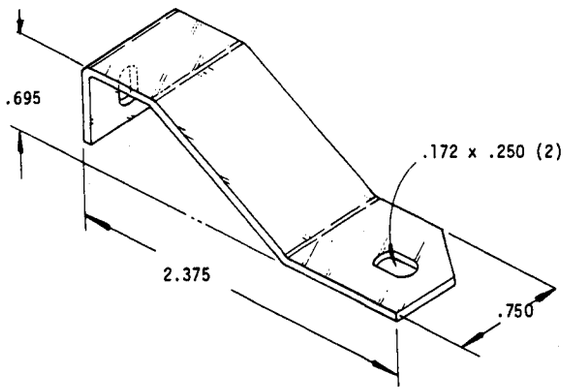

DIODE, H.S.
214-1872-00 CC: I-
.090 Aluminum (251-0070-XX)
Etch & Chromate Conversion

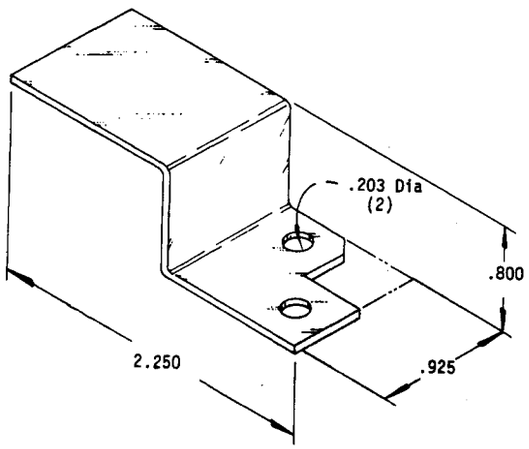

DIODE, H.S.
214-1873-00 CC: I-
.063 Aluminum (251-0077-XX)
Etch & Chromate Conversion

HEAT SINKS (CONT)

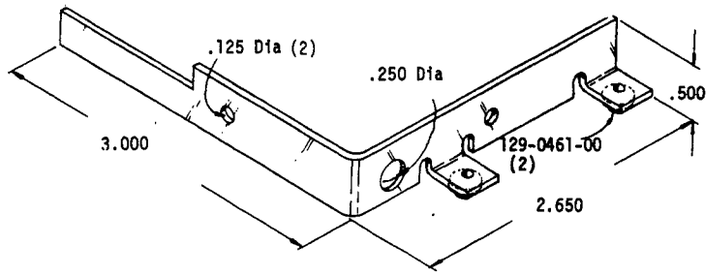

CIRCUIT BOARD, H.S.
214-2495-00
.063 Aluminum (251-0077-XX)

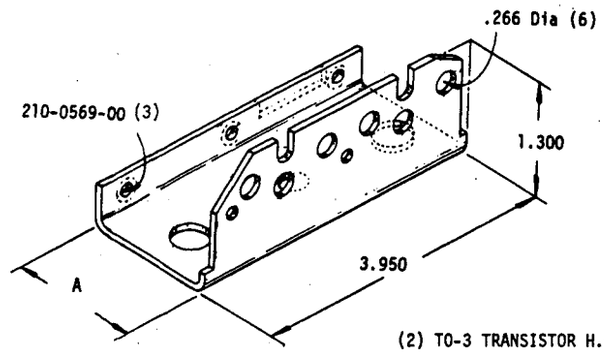

(2) TO-3 TRANSISTOR H.S
214-1624-00 CC: J+ A=1.628
214-1871-00 CC: J A=1.755 (Scrnd)
.063 Aluminum, Etch & Chromate Conversion

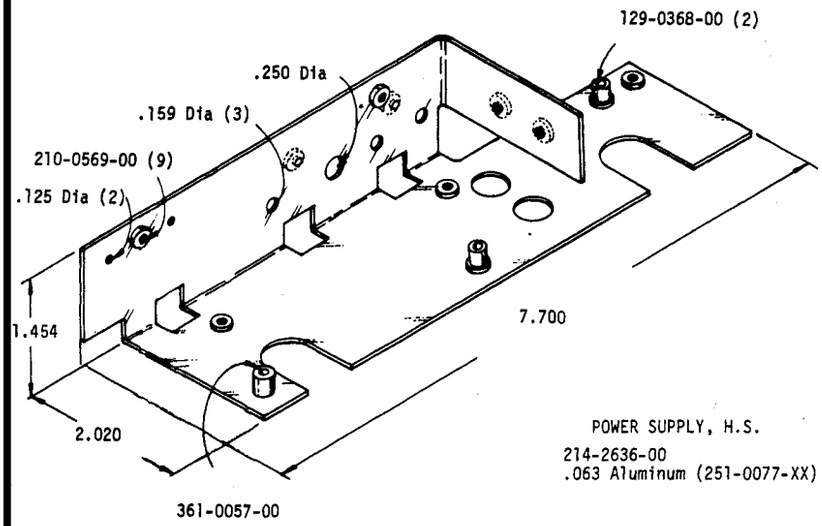

POWER SUPPLY, H.S.
214-2636-00
.063 Aluminum (251-0077-XX)

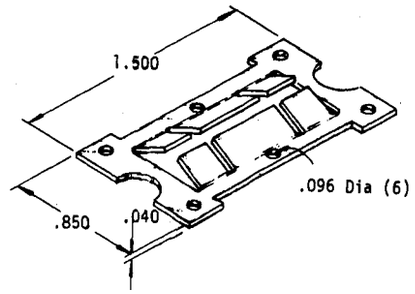

RESISTOR, H.S.
214-2597-00 CC: H+
Aluminum Etch & Chromate Conversion

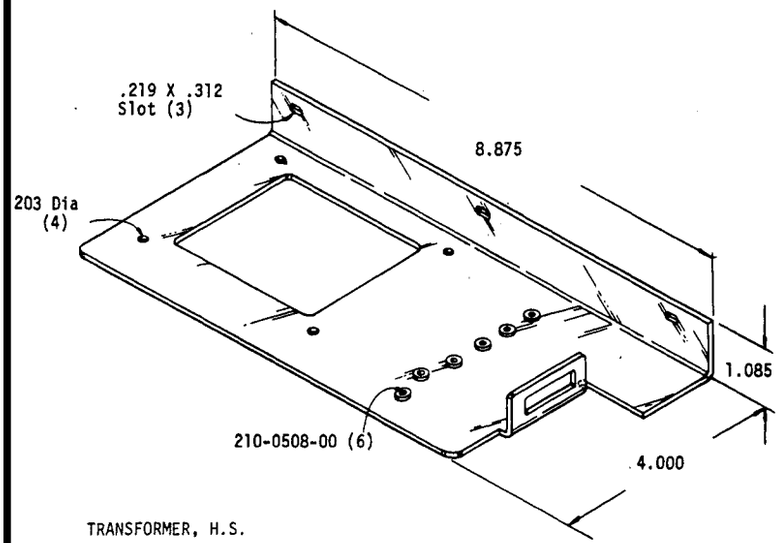

TRANSFORMER, H.S.
214-2301-00 CC: K
.090 Aluminum (251-0070-XX)

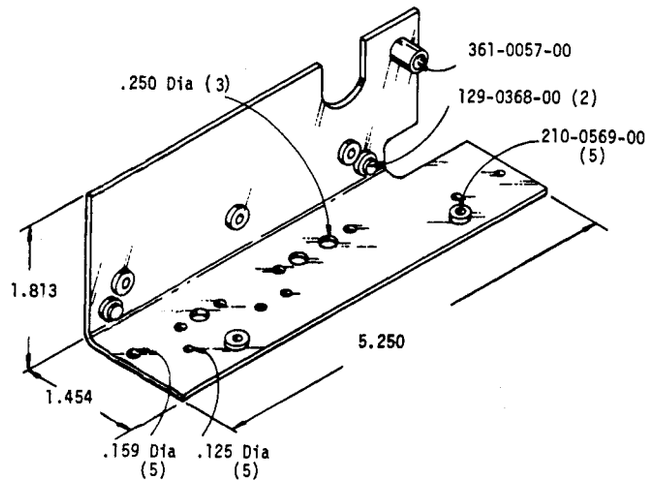

POWER SUPPLY, H.S.
214-2493-00
.063 Aluminum (251-0077-XX)

HEAT SINKS (CONT)

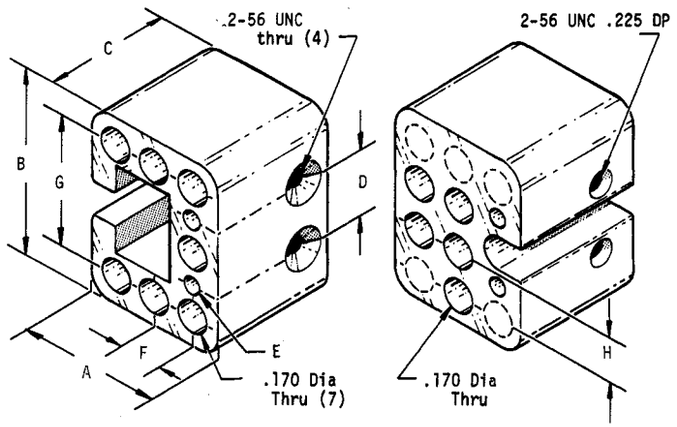

A = .762
B = .980
C = .670
D = .346
E = .094 Dia x .250 DP (2)
F = .233
G = .690
H = .230

READOUT, HEAT SINK

214-1116-00 CC: K+
Aluminum Extrusion (251-1029-00)
Etch & Chromate Conversion

214-1117-00 CC: L (10 holes)
214-1228-00 CC: J+ (5 holes)
Aluminum Extrusion (251-1030-00)
Etch & Chromate Conversion

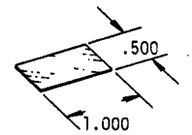

ELECTRICAL, H.S.
214-1012-00 CC: H+
.016 Aluminum (251-0145-00)
Adhesive Backing One Side

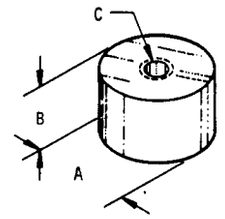

PART NUMBER	CC	(OD) A	(LENGTH) B	(ID) C
214-1757-00	H-	1.000	.270	6-32 UNC
214-1614-00	H-	.312	.236	.116
214-3174-00	F+	.375	.250	4.40 W/CSK (2)
214-2993-00	G-	.375	.510	4.40 W/.160 DIA X.080 C BORE
214-2991-00	G	.625	.510	4.40 W/.160 DIA X.080 C BORE

Aluminum, Etch & Chrome Conversion

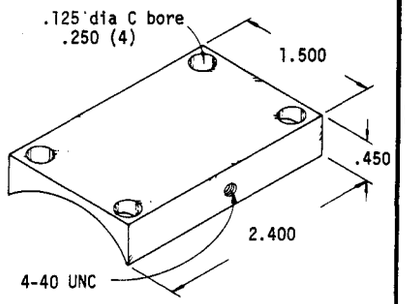

214-2769-00 CC: L-
Aluminum Extrusion (251-1201-00)

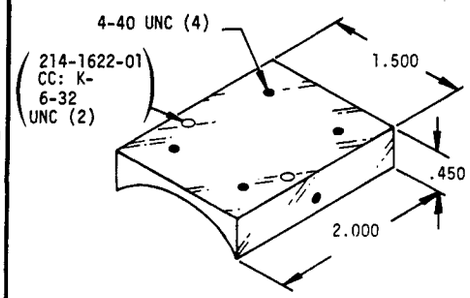

214-3058-00 CC: K+
Aluminum Extrusion (251-1201-00)

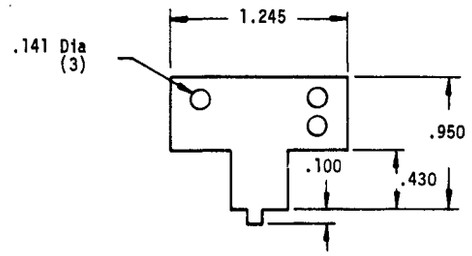

CIRCUIT BOARD H.S.
214-2454-00 CC: J+
.032 Brass (251-0333-XX)

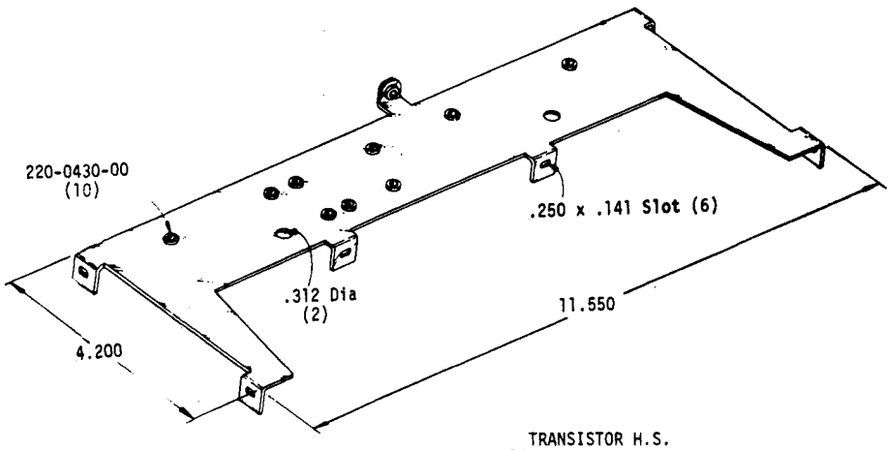

TRANSISTOR H.S.
214-2366-00 CC: K-
.040 Aluminum
Etch & Lacquer

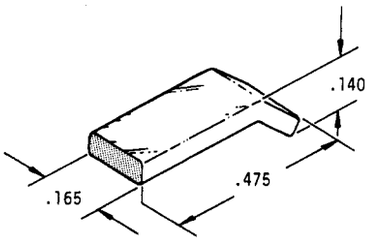

LAMP, HEAT SINK
214-1147-00 CC: F+
.063 Aluminum (251-1055-XX)
Black

HEAT SINKS (CONT)

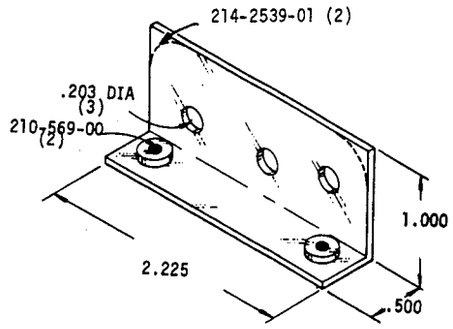

(2) TO-3 (1) TO-127 TRANSISTOR, H.S.
214-2539-00
.063 Aluminum (251-0077-00)
Etch & Lacquer

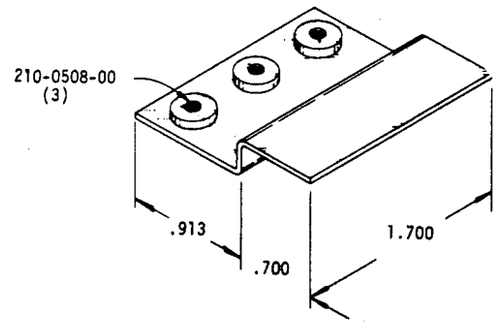

TO-220 TRANSISTOR, H.S.
214-2465-00 CC: I+
.063 Aluminum (251-0077-XX)
Etch & Chromate Conversion

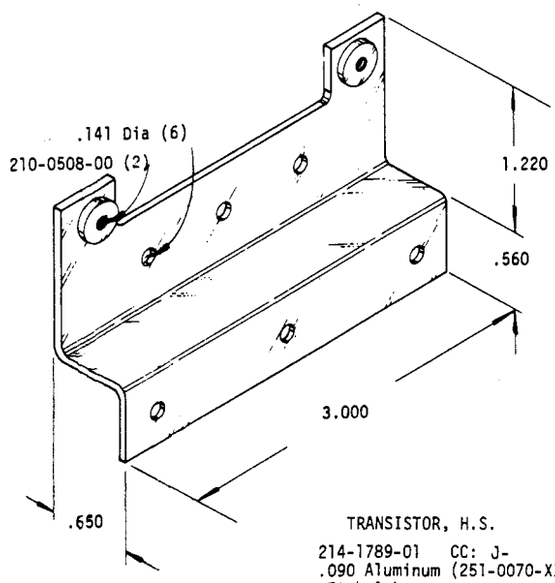

TRANSISTOR, H.S.
214-1789-01 CC: J-
.090 Aluminum (251-0070-XX)
Etch & Lacquer

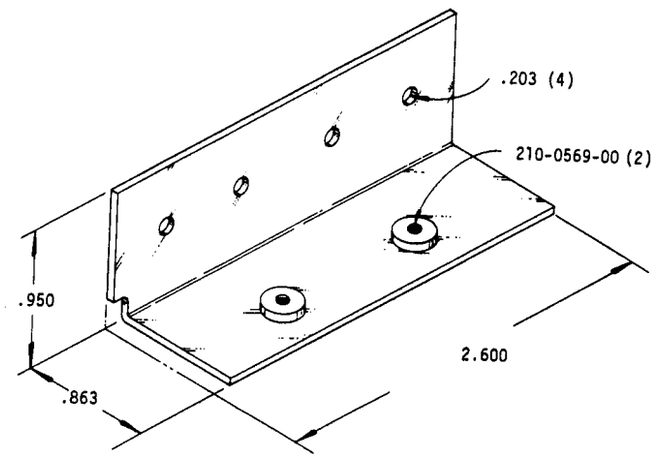

TRANSISTOR, H.S.
214-1867-00
.063 Aluminum (251-0077-XX)
Etch & Lacquer

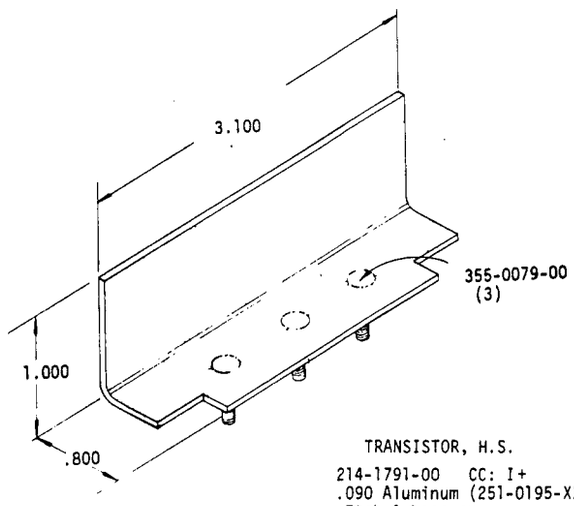

TRANSISTOR, H.S.
214-1791-00 CC: I+
.090 Aluminum (251-0195-XX)
Etch & Lacquer

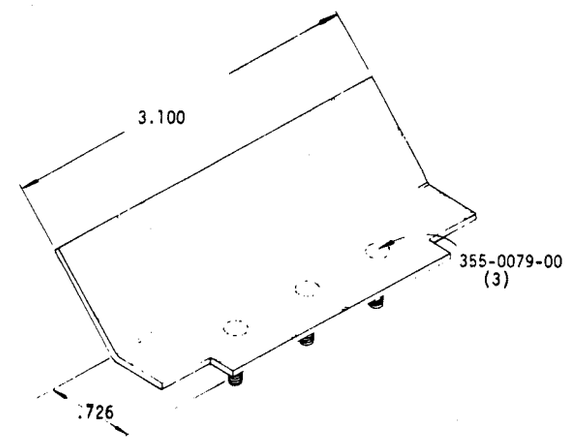

TRANSISTOR, H.S.
214-1764-00 CC: I+
.090 Aluminum (251-0195-XX)
Etch & Lacquer

HEAT SINKS (CONT)

5

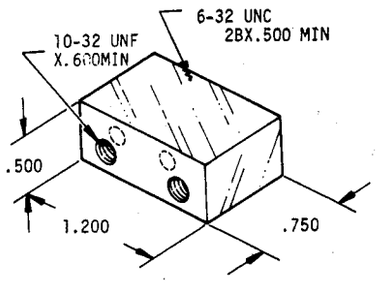

DIODE (DO-4) H.S.
214-3302-00 CC: J+
.500 X .750 Aluminum (251-1355-00)
Etch & Chromate Conversion

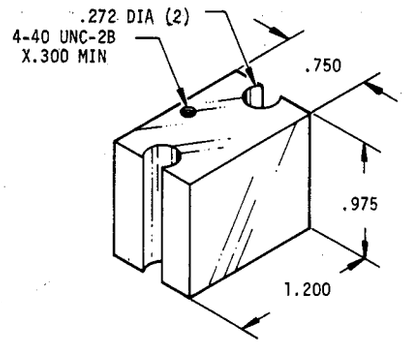

TRANSISTOR H.S.
214-3243-00 CC: L
1.000 Sq. Aluminum (251-1602-00)
Etch & Chromate Conversion

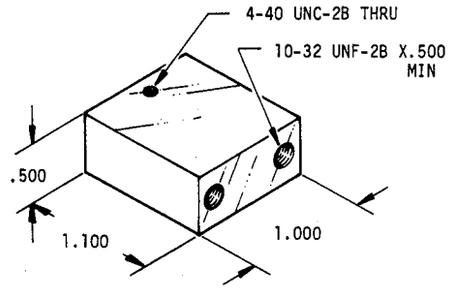

DIODE H.S.
214-3231-00 CC: J+
.500 X 1.000 Aluminum (251-0286-00)
Etch & Chromate Conversion

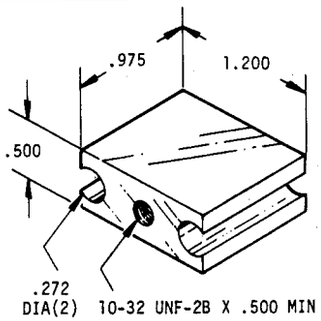

DIODE H.S.
214-3244-00 CC: K
.500 X 1.000 Aluminum (251-0286-00)
Etch & Chromate Conversion

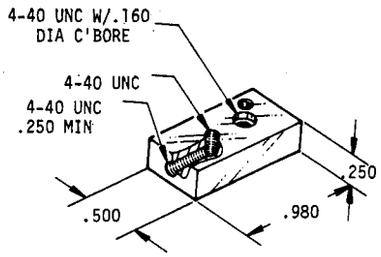

TRANSISTOR H.S.
214-3178-00 CC: J+
.250 X .500 Aluminum (251-0016-00)
Etch & Chromate Conversion

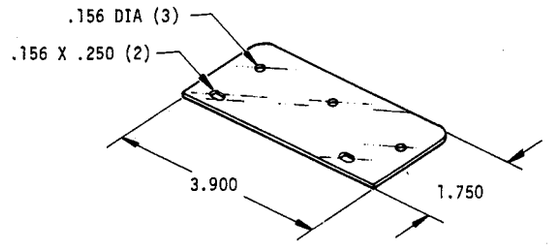

TRANSISTOR H.S.
214-3216-00 CC: G
.080 Aluminum (251-1019-XX)
Etch & Chromate Conversion

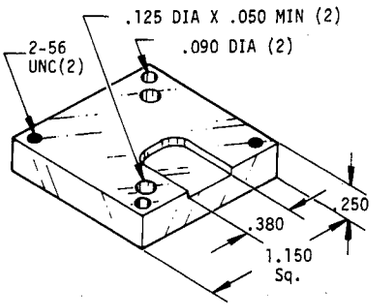

MICROCIRCUIT H.S.
214-2543-00 CC: K
250 X 1.500 Aluminum (251-1211-00)
Etch & Chromate Conversion

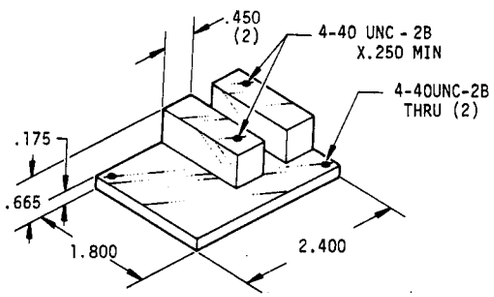

TRANSISTOR H.S.
214-3269-00 CC: L-
Aluminum Extrusion (251-1706-00)
Etch & Lacquer

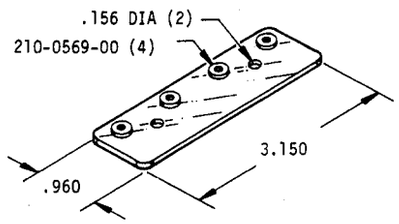

214-3144-00 CC: H
.080 Aluminum (251-0078-XX)
Etch & Chromate Conversion

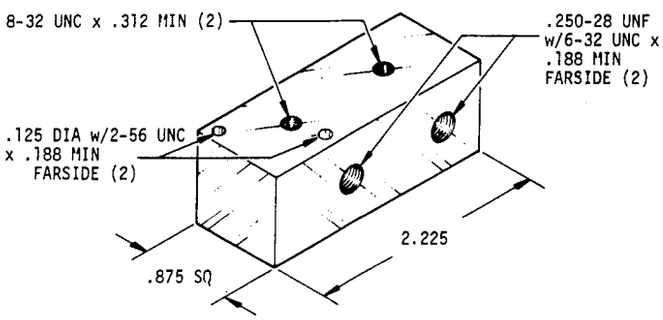

DIODE H.S.
214-3257-00 CC: L+
Aluminum Extrusion (251-1728-00)

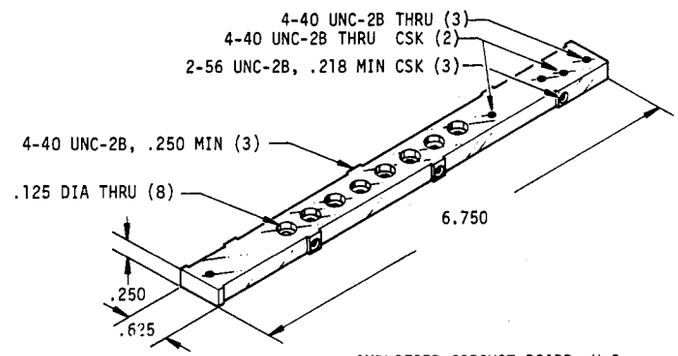

AMPLIFIER CIRCUIT BOARD H.S.
214-3153-00 CC: L+
.250 X .625 Aluminum (251-0109-00)
Etch & Chromate Conversion

HEAT SINKS (CONT)

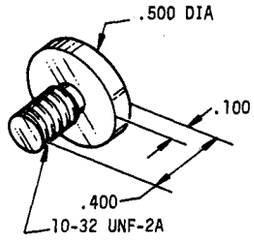

214-1729-00 CC: I
.500 DIA Copper (258-0439-00)

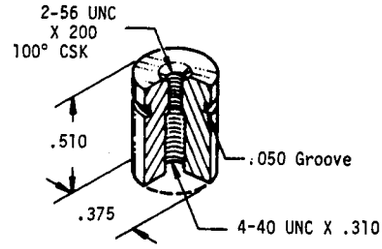

214-3175-00 CC: G
.375 DIA Aluminum (251-0023-00)

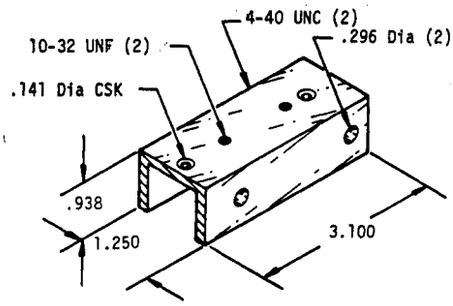

(2) TO-220, (2) DIODE H.S.
214-2857-00 CC: J+
Aluminum Extrusion (251-0226-00)
Etch & Chromate Conversion

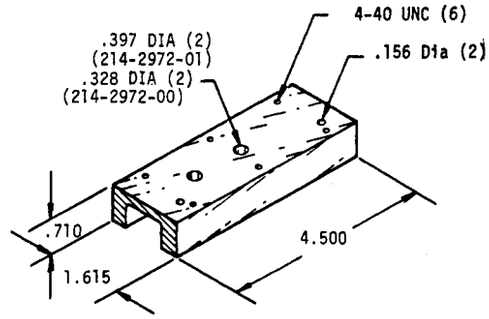

TO-61 TRANSISTOR H.S.
214-2972-00 CC: K-
214-2972-01 CC: K-
Aluminum Extrusion (251-1609-00)
Etch & Lacquer

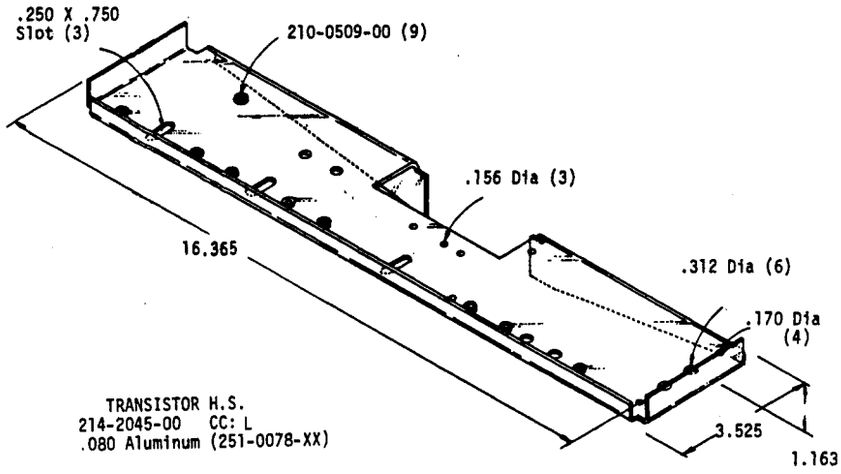

TRANSISTOR H.S.
214-2045-00 CC: L
.080 Aluminum (251-0078-XX)

COST CODE

(CC COLUMN)

CODE	≈ VALUE with -	≈ VALUE no suffix	≈ VALUE with +
A	.2¢	.5¢	.75¢
B	1.25¢	1.5¢	2¢
C	2.5¢	3¢	3.75¢
D	4.25¢	5¢	6¢
E	7¢	8¢	10¢
F	13¢	15¢	18¢
G	22¢	25¢	35¢
H	40¢	50¢	60¢
I	65¢	75¢	$1
J	$1.25	$1.50	$2
K	$2.50	$3	$3.75
L	$4.25	$5	$6
M	$7	$8	$10
N	$13	$15	$18
O	$22	$25	$35+

NOTE: Costs may vary from order to order due to order quantities, vendor, etc.

HEAT SINKS (CONT)

5

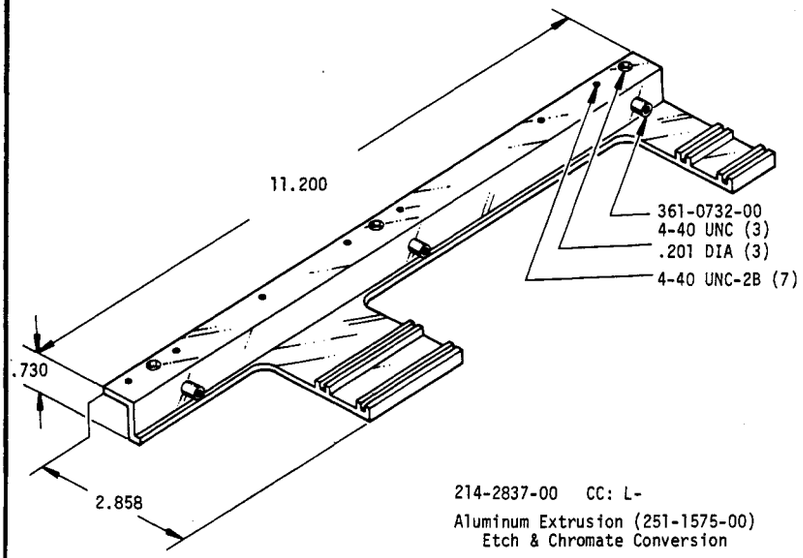

214-2837-00 CC: L-
Aluminum Extrusion (251-1575-00)
Etch & Chromate Conversion

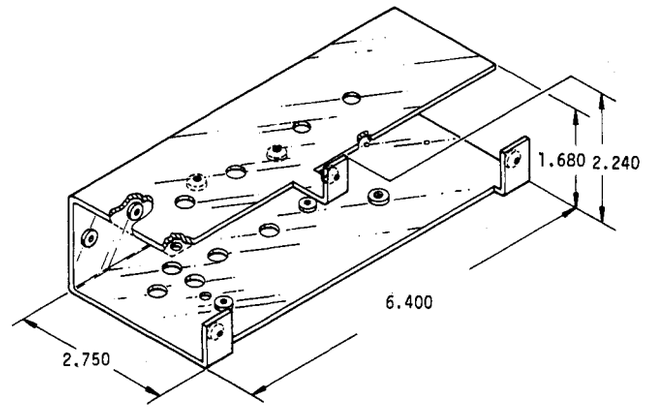

214-2928-00 CC: K
.090 Aluminum (251-0070-XX)
Etch & Chromate Conversion

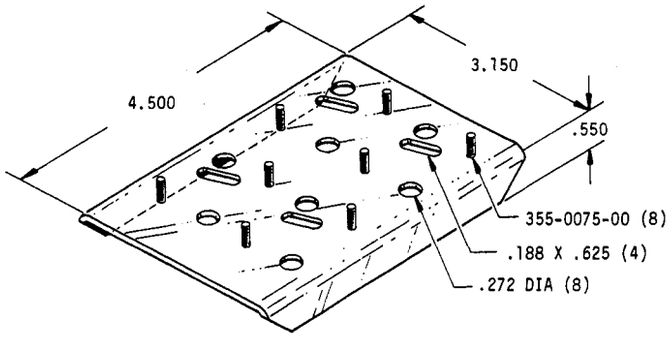

214-1557-01 CC: J+
.080 Aluminum (251-1019-XX)
Etch only

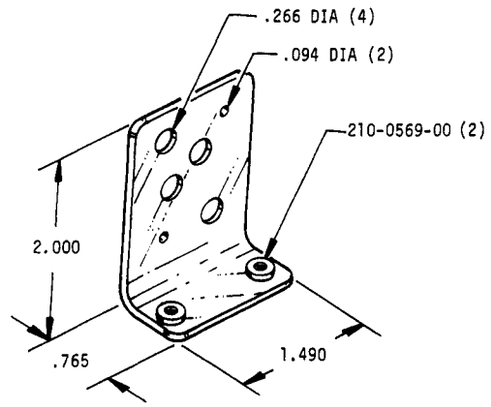

214-3140-00 CC: H+
.090 Aluminum (251-0070-XX)
Etch & Chromate Conversion

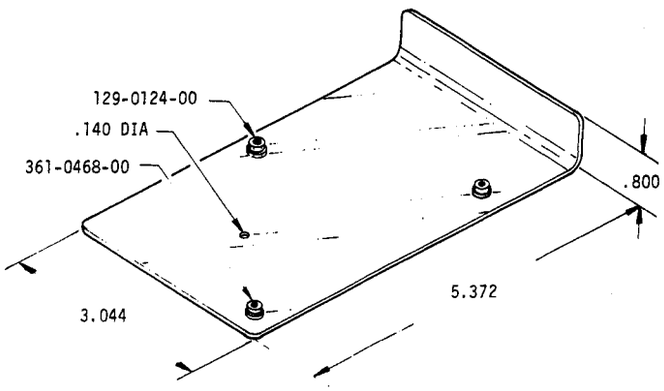

214-1652-00 CC: J
.063 Aluminum (251-0077-XX)
Etch & Chromate Conversion

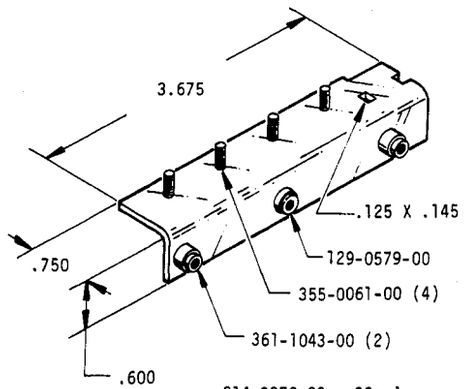

214-3070-00 CC: J
.090 Aluminum (251-0070-XX)
Etch & Chromate Conversion

HEAT SINKS (CONT)

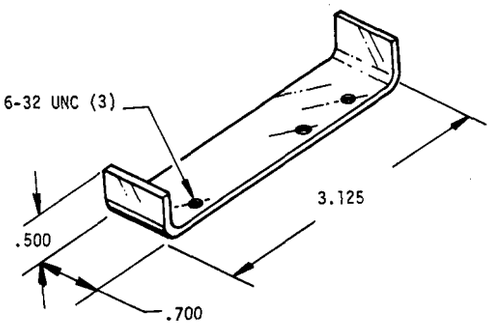

214-3300-00 CC: J-
.090 Aluminum (251-0070-XX)
Anodize and Black Dye

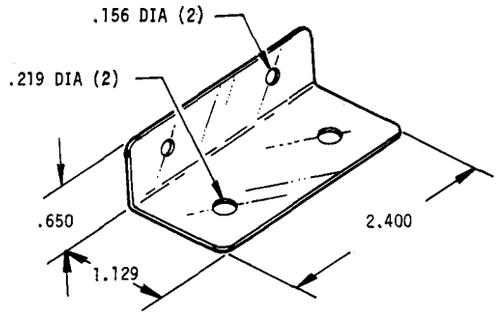

214-1653-00 CC: G+
.040 Aluminum (251-0076-XX)
Etch & Chromate Conversion

5

COST CODE

(CC COLUMN)

CODE	≈ VALUE with -	≈ VALUE no suffix	≈ VALUE with +
A	.2¢	.5¢	.75¢
B	1.25¢	1.5¢	2¢
C	2.5¢	3¢	3.75¢
D	4.25¢	5¢	6¢
E	7¢	8¢	10¢
F	13¢	15¢	18¢
G	22¢	25¢	35¢
H	40¢	50¢	60¢
I	65¢	75¢	$1
J	$1.25	$1.50	$2
K	$2.50	$3	$3.75
L	$4.25	$5	$6
M	$7	$8	$10
N	$13	$15	$18
O	$22	$25	$35+

NOTE: Costs may vary from order to order due to order quantities, vendor, etc.

†† CATALOG RELIABILITY CODES

USAGE/YR	CODE
≥10	1
≥100	2
≥1 000	3
>10 000	4
≥100 000	5
≥1 000 000	6
≥10 000 000	7

FAILURE FREQ	CODE	%/YR (median)
1/100 000	A	= .001
1/50 000	B	= .002
1/20 000	C	= .005
1/10 000	D	= .01
1/5 000	E	= .02
1/2 000	F	= .05
1/1 000	G	= .1
1/500	H	= .2
1/200	I	= .5
1/100	J	= 1.0+

For further explanation of this code, see page 0-25.

INSULATORS

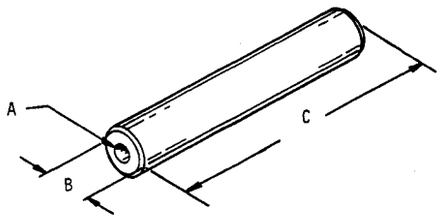

ID(A)	PART NUMBER	OD(B)	LENGTH(C)	MATERIAL	CC
.030	342-0050-00	.125	.100	Acetal Resin	E
.045	342-0160-00	.157	.340	255-0127-00	G
.047	342-0304-00	.161	.560	255-0127-00	I+
.047	342-0122-00	.162	.150	Teflon	G
.047	342-0101-00	.162	.325	Teflon	F
.050	342-0376-00	.163	.865	255-0127-00	I+
.052	342-0147-00	.120	.115	Teflon	H
.052	342-0318-00	.1615	.234	255-0127-00	H+
.054	342-0381-00	.187	.360	255-0127-00	I-
.063	342-0170-00	.187	.329	255.0127-00	G
.081	342-0168-00	.248	.386	255-0028-00	G
.106 (Ea End)	342-0408-00	.312	.975	251-0978-00	H+
.156	342-0577-00	.370	.140	255-0028-00	I+
.228	342-0253-00	.280	1.510	Polystyrene	J
.266	342-0137-00	.500	.150	Black Polycarbonate	F

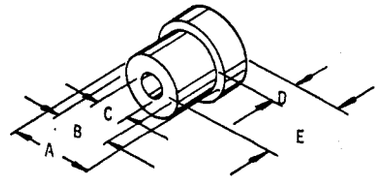

PART NUMBER	A	B	C	D	E	MATERIAL	CC
214-0716-00	.625	.343	.185	.050	.265	255-0197-00	E-
214-0719-00	.325	.250	.156	.047	.250	255-0386-00	F+
214-0950-00	.220	.137	.060	.020	.085	254-0998-00	E
342-0123-00	.125	.100	.047	.100	.300	255-0164-00	H
342-0171-00	.187	.142	.059	.136	.216	255-0127-00	E+
342-0273-00	.156	.094	.048	.025	.125	255-0241-00	J-
342-0343-00	.187	.123	.030	.040	.180	255-0127-00	H

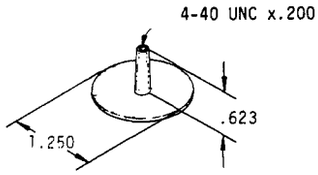

342-0172-00 CC: G
Insulator, Transformer
Acetal Resin

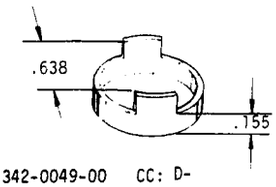

342-0049-00 CC: D-

.020 Polypropylene, Black

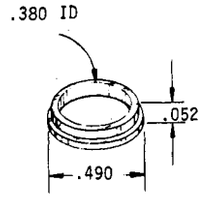

342-0107-00 CC: F
Bushing, BNC
Acetal Resin

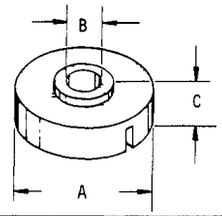

PART NUMBER	A	B	C	CC
342-0463-00	.2265	.0575	.075	I-
342-0386-00	.2155	.0595	.075	I-

Insulation Contact
Polystyrene (255-0663-00)

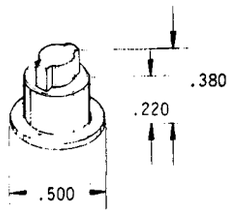

342-0263-00 CC: G+
Insulator, Variable Resistor
Black Nylon

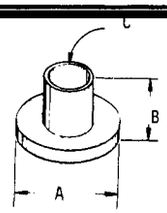

342-0034-00 CC: G
A: .346, B: .220, C: .145
Polyimide

342-0421-00 CC: F-
A: .240, B: .230, C: .089
Polyimide

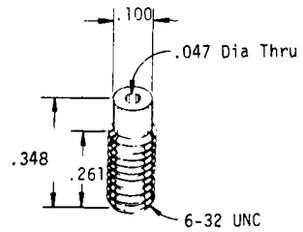

342-0298-00 CC: I-
Teflon (255-0127-00)

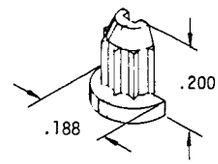

342-0474-00 CC: E+
Insulator Half, Feedthru
Delrin (254-0998-00)

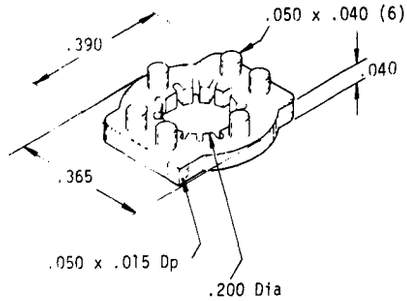

342-0356-00 CC: D
Insulator Plate, Microcircuit (10 Leads)
Nylon

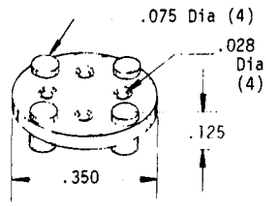

342-0324-00 CC: B+
Insulator Disc, Nylon
TO-5 Transistor

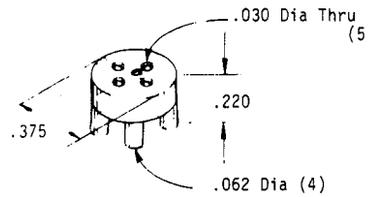

348-0566-00 CC: C
Mounting for TO-5 Transistor
Nylon

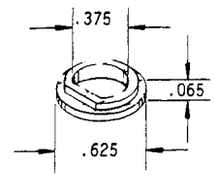

342-0117-00 CC: C
Bushing (BNC)
Acetal Resin
.504 OD

††RC: 4E

INSULATORS (CONT)

SHOULDERED WASHERS

A	B	C	D	E	MATERIAL	FINISH	PART NUMBER	CC	†† RC
.0565	.094	.2135	.022	.045	Polystyrene		342-0385-00	F+	
.0605	.099	.2255	.022	.045	Polystyrene		342-0462-00	G-	
.090	.121	.200	.050	.085	Nylon	Black	210-1156-00	D	5D
.093	.123	.225	.057	.085	Fiber		210-1289-00	G-	
.110	.187	.250	.031	.062	Fiber		210-0849-00	B+	
.115	.247	.375	.045	.100	Acetal		210-1140-00	D-	
.116	.143	.210	.034	.075	Nylon		210.1171-00	B	5C
.118	.144	.202	.044	.069	Nylon w/ Fiberglass		210-1178-00	B	5C
.120	.147	.200	.040	.080	Acetal	Black	210-1181-00	C-	
.125		.375		.093			210-1329-00		
.138	.189	.312	.030	.050	Al Anadoze	Black	210-0983-00	J-	
.140	.190	.313	.039	.062	Fiber		210-0811-00	B-	5C
.140	.247	.375	.036	.100	Acetal		210-1111-00	G-	4D
.140	.247	.375	.045	.100	Delrin		210-0975-00	B	
.141	.203	.375	.031	.078	Fiber	Gray	210-0935-00	B-	B
.145	.036	.500	.020	.036	Delrin		210-1364-00	C	
.155	.245	.375	.050	.100	Nylon		210-0967-00	B+	
.166		.186		.030	Teflon		210-0948-00	D	
.171	.375	.500	.031	.094	Plastic		210-0859-00	C+	
.196	.250	.437	.028	.062	Fiber		210-0813-00	E-	
.255	.312	.500	.030	.100	Fiber		210-0904-00	C	
.270	.310	.500	.120	.170	Polyphenyl		210-1324-00	F	
.322	.365	.750	.057	.088	Nylafil		342-0265-00	C+	
.325	.370	.625	.043	.063	Acetal	Black	210-1116-00	G-	
.377	.437	.625	.029	.063	Fiber		210-0865-00	C	
.820	.900	1.080	.040	.070	Fiber	Black/ Gray	210-1031-00	J+	

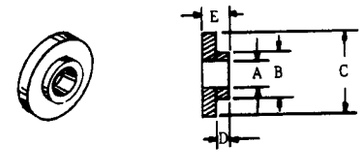

PLAIN WASHERS

ID	OD	THICK	MATERIAL	OTHER	PART NUMBER	CC	†† RC
.025	.067	.015	Polyimide		342-0456-00	G	
.040	.500	.005	Mica		210-0944-00		
.047	.203	.0025	Mica		214-0971-00	C	
.125	.242	.030	Teflon		214-0791-00	H	
.130	.565	.002	Mica		342-0209-00	E+	
.141	.500	.005	Mica		210-0921-00	A+	
.145	.812	.002	Mica		342-0136-00	A	5C
.145	.812	.012	Silicone Rubber		342-0358-00	D+	
.163	.534	.028	Mica		210-0943-00	H	
.184	.395	.100	Polyethylene		214-1008-00	G+	
.190	.281	.046	Teflon		210-0910-00	A+	
.196	.625	.005	Mica		210-0909-00	B+	
.200	.625	.002	Silicone Rubber	Thermal Conditioning	342-0498-00	E-	
.245	1.000	.005	Mica		342-0517-00	C	
.250	.715	.010	Acetate Butyrate		342-0380-00	E+	
.250	.855	.003	Mica		342-0044-00	E	

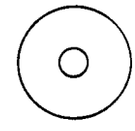

FOR OTHER WASHERS SEE MECHANICAL CATALOG, Section 4, Pages 4-2 thru 4-4.

A	B	THICK	MATERIAL	HOLE DATA	PART NUMBER	CC	†† RC
.300	.425	.002	Mica	.116 dia	342-0224-00	B	
.312	.312	.002	Mica	.126 dia	342-0166-00	A+	
.312	.473	.012	Silicone Rubber	.093 dia	342-0363-00		
.470	.685	.002	Mica	For TO-220 (TI)	342-0202-00	A-	5A
.562	.687	.010	Silicone Rubber w/Fiberglass	.141 dia	342-0563-00	D+	5A
.470	.565	.002	Mica	.116 dia	342-0586-00	G-	
.562	.687	.012	Silicone Rubber	.125 dia	342-0355-00	D	
.562	.688	.002	Thermal Film		342-0322-00	F	
.562	.795	.002	Kapton	.115 dia	342-0451-00	B-	
.625	.675	.002	Mica	.116 dia	342-0163-00	A+	
.630	.855	.012	Silicone Rubber	.093 dia	342-0354-00	D	
.630	.855	.012	Silicone Rubber	.125 dia	342-0354-01	F-	
.650	.904	.010	Silicone Rubber	.141 dia	342-0630-00	G	
.860	1.310	.010	Polyester	.125 dia	342-0321-00	I+	

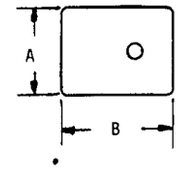

†† For Reliability Code, See Page 5-27.

INSULATORS (CONT)

5

TYPE	MATERIAL	OTHER	PART NUMBER	CC	†† RC
TO-3	Mica	Smaller than 385-0978-00	386-0786-00	C+	
TO-3	Mica		386-0978-00	B+	
TO-3	Silicone Rubber		342-0629-00		
TO-3	Aluminum Oxide		342-0523-00	I-	
TO-37	Mica		386-1094-00	B+	
TO-66	Mica		386-0143-00	C-	
TO-66	Silicone Rubber		342-0357-00	F-	
TO-66	Plastic	Cover, trans, insulating	200-0669-00	G+	4E

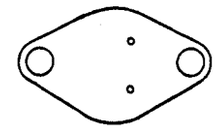

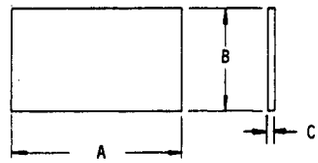

A	B	C	MATERIAL	PART NUMBER	CC	†† RC
.225	.375	.100	Fluorocarbon (255-0028-00)	342-0447-00	G+	
.360	.150	.010	Polyester (255-0427-00) Adhesive Back	342-0350-00	J-	
.430	.250	.030	Silicone Rubber (255-0472-00)	342-0285-00	I	
.650	.500	.010	Polyester (255-0427-00) Adhesive Back	342-0315-00	F	
.900	.375	.010	Polyester (255-0427-00) Adhesive Back	342-0391-00	G	
.950	.580	.010	Polyester (255-0427-00) Adhesive Back	342-0364-00	F	
1.150	.375	.010	Polyester (255-0427-00) Adhesive Back	342-0392-00	G	
1.280	.905	.010	Silicone Rubber & Fiberglass	342-0425-00	E+	
1.400	.375	.010	Polyester (255-0427-00) Adhesive Back	342-0390-00	G+	
1.463	1.463	.270	Urethane Form (252-0591-00)	342-0283-00	H+	
1.600	.300	.002	Polyester (255-0319-00) Adhesive Back	342-0368-00	G	
1.600	1.250	.003.- .005	Polyester (255-0319-00) Adhesive Back	342-0095-00	G+	
1.600	1.300	.010	Silicone Rubber with Fiberglass	342-0595-00	F-	
1.750	1.500	.010	Polyester (255-0427-00) Adhesive Back	342-0269-00	D+	
1.750	.850	.010	Polyester (255-0427-00) Adhesive Back	342-0584-00	G+	
1.800	.550	.009	Silicone Rubber, Adhesive Back	342-0516-00	G	
2.060	.530	.010	Polyester (255-0427-00) Adhesive Back	342-0281-00	F+	
2.250	1.125	.003 - .005	Polyester (255-0319-00) Adhesive Back	342-0094-00	G+	
2.266	1.116	.010	Polyester (255-0427-00) Adhesive Back	342-0270-00	G	
2.290	1.400	.005	Polyester Film (002-1028-00)	342-0213-01	G	3H
2.400	.900	.003 - .005	Polycarbonate, Clear Adhesive Back	342-0073-00	E+	
2.500	1.700	.010	Polyester (255-0427-00) Adhesive Back	342-0316-00	G	
2.800	1.100	.010	Polyester (255-0417-00)	342-0415-00	G	
2.800	2.800	.005	Polyimide (255-0275-00)	342-0507-00	G+	
3.000	1.700	.010	Polyester (255-0427-00) Adhesive Back	342-0127-00	G	
3.000	2.400	.002	Polyester (255-0319-00) Adhesive Back	342-0272-00	G	
3.250	.255	.002	Polyester (255-0319-00) Adhesive Back	342-0184-00	H	
3.460	.650	.010	Polyester (255-0427-00) Adhesive Back	342-0365-00	H-	
3.500	3.500	.005	Polyester, Mylar (002-1028-00)	342-0131-00	G	
3.820	1.870	.010	Polyester (255-0427-00) Adhesive Back	342-0249-00	G	
3.820	2.500	.010	Polyester (255-0427-00) Adhesive Back	342-0264-00	G+	
3.975	.730	.010	Polyester (255-0427-00) Adhesive Back	342-0327-00	G+	
4.086	1.761	.010	Polyester, Mylar Adhesive Back	342-0589-00	G	
4.120	3.050	.010	Polyester (255-0427-00) Adhesive Back	342-0329-00	H-	
4.200	.300	.010	Polyester (255-0427-00) Adhesive Back	342-0383-00	G-	
4.200	1.450	.005	Polyester	342-0236-00	C-	
4.250	3.850	.010	Polyester (255-0427-00) Adhesive Back	342-0308-00	G	
4.500	2.000	.002	Polyester (255-0319-00) Adhesive Back	342-0212-00	G	4E
4.500	3.500	.010	Polyester (255-0319-00) Adhesive Back	342-0182-00	G+	
4.750	1.125	.002	Polyester (255-0319-00) Adhesive Back	342-0439-00	H	
5.030	1.515	.004	Mica	342-0370-00	J-	
5.900	3.200	.010	Polyester (255-0427-00) Adhesive Back	342-0455-00	H-	
6.000	1.420	.010	Polyester (255-0427-00) Adhesive Back	342-0271-00	G	
6.250	4.000	.010	Polyester, Adhesive Back	342-0556-00	H	
6.747	5.430	.002	Clear Mylar (002-0147-00)	342-0015-00	G-	
8.500	.600	.040	Ceramic (204-0831-00)	342-0457-00		
8.600	2.500	.010	Polyester (255-0427-00) Adhesive Back	342-0403-00	H-	
8.625	4.000	.010	Polyester (255-0427-00) Adhesive Back	342-0196-00	H+	
9.075	9.075	.500	Fiberglass	342-0226-00	H-	
10.750	4.000	.010	Polyester (255-0427-00) Adhesive Back	342-0470-00	H	3I
14.950	.950	.062	Epoxy Glass (254-0541-00)	342-0361-00	J-	

†† FOR RELIABILITY CODES, SEE PAGE 5-27.

INSULATORS (CONT)

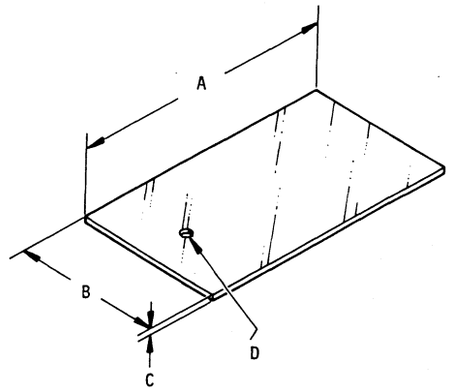

LENGTH A	WIDTH B	THICKNESS C	NUMBER OF HOLES D	MATERIAL	PART NUMBER	CC
.570	.400	.005	2 (.060 dia)	Polyimide (255-0275-00)	342-0266-00	F-
.710	.470	.005	6 (.100 dia)	Fish Paper (252-0537-00)	214-1108-00	E
.815	.500	.006	7 (.089 dia)	Fish Paper (252-0537-00)	214-2250-00	D
1.000	.750	.062	3 (.156 dia)	Epoxy Glass Laminate (254-0541-00)	342-0201-00	G
1.000	.800	.005	1 (.156 dia)	Polyimide (255-0275-00)	342-0450-00	F
1.100	.680	.030	1 (.059 dia)	Polycarbonate (255-0371-00)	342-0257-00	D
1.150	.700	.010	2 (.125 dia)	Polyester (255-0417-00	342-0228-00	G-
1.200	.675	.002	2 (.156 dia)	Mica	342-0194-00	
1.250	1.000	.060	2 (.203 dia)	ABS Black (255-0397-00)	342-0362-00	J
1.300	.900	.079	2 (.125 dia)	Thermalloy	342-0233-00	I
1.500	1.500		2 (.128 dia)	Silicone Rubber & Fiberglass	342-0426-00	F
1.525	1.000	.005	2 (.109 dia)	Polyimide Film	342-0485-00	F
1.750	1.625	.002	4 (.140 dia)	Polyimide Film	342-0578-00	F+
1.800	.600	.015	1 (.141 dia)	Fiber (252-0523-00)	342-0495-00	F
2.000	.900	.079	3 (.125 dia)	Thermalloy	342-0234-00	I+
2.319	.550	.005	2 (.234 dia)	Polyimide (255-0275-00)	342-0193-00	H-
2.500	1.500	.010	2 (.156 dia)	Polyester (255-0417-00)	342-0289-00	H
2.550	1.500	.010	2 (.141 dia)	Polyester (255-0417-00)	342-0229-00	G
2.654	1.500	.030	4 (.200 dia)	NEMA Grade XPC	342-0610-00	E+
2.700	1.800	.010	2 (.325 dia)	Silicone Rubber	342-0566-00	H-
2.875	1.875	.002	4 (.141 dia)	Polyimide	342-0569-00	G+
2.900	1.250	.045	2 (.125 dia)	Urethane Foam	342-0604-00	D+
2.900	1.500		2 (.128 dia)	Silicone Rubber & Fiberglass	342-0424-00	G
3.000	.500	.010	2 (.040 dia)	Polyester (255-0417-00)	342-0254-00	H+
3.000	.700	.001	3 (.135 dia)	Mica	342-0195-00	C
3.000	1.700	.060	4 (.203 dia)	Polycarbonate	342-0571-00	G
3.200	2.400		2 (.125 dia)	Silicone Rubber & Fiberglass	342-0464-00	H
3.420	.890	.010	1 (.312) 2 (.250)	Polyester (255-0427-00)	342-0345-00	N-
3.500	1.500	.002	3 (.219 dia)	Polyester w/Adhesive Back	342-0573-00	F
3.785	.600	.015	2 (.141 dia)	Fiber (252-0523-00)	342-0494-00	F+
3.800	2.100	.031	1 (.281 dia)	Fiber (252-0504-00)	342-0401-00	
4.000	1.900	.002	4 (.343 dia)	Polyimide Film	342-0562-00	F+
4.724	2.256	.005	2 (.234 dia)	Polyester (255-0275-00)	342-0104-00	H-
4.750	.750	.001	3 (.172 dia)	Mica	342-0214-00	F-
5.250	3.500	.002	6 (.130 dia)	Polyimide Film	342-0548-00	G+
5.300	1.000		2 (.438 dia)	Felt, Gray	342-0041-00	D-
5.525	1.675	.020	9 (.156 dia)	Fiber (252-0514-00)	342-0549-00	G
5.710	4.000	.010	1 (.281 dia)	Polyester (255-0417-00)	342-0422-00	G
6.654	3.104	.010	9 (.250 dia)	Polyester (255-0427-00)	342-0511-00	G+
8.310	1.920	.010	10 (.150 dia)	Polyester (255-0427-00)	342-0351-00	I
8.500	1.750	.030	2 (.141) 1 (.218)	Acrylic (255-0141-00)	342-0215-00	H-
8.500	1.750		3 (.172 dia)	Drafting Film	342-0106-00	H-
12.000	.900	.094	3 (.250) 2 (.125 & CSK)	Phenolic (254-0531-00)	342-0039-00	J-
15.500	4.375	.020	3 (.250 dia)	Polycarbonate (255-0295-00)	342-0085-00	H-

COST CODE

(CC COLUMN)

CODE	A	B	C	D	E	F	G	H	I	J	K	L	M	N	O
≈ VALUE with +	.75¢	2¢	3.75¢	6¢	10¢	18¢	35¢	60¢	$1	$2	$3.75	$6	$10	$18	$35+
≈ VALUE no suffix	.5¢	1.5¢	3¢	5¢	8¢	15¢	25¢	50¢	75¢	$1.50	$3	$5	$8	$15	$25
≈ VALUE with -	.2¢	1.25¢	2.5¢	4.25¢	7¢	13¢	22¢	40¢	65¢	$1.25	$2.50	$4.25	$7	$13	$22

NOTE: Costs may vary from order to order due to order quantities, vendor, etc.

INSULATORS (CONT)

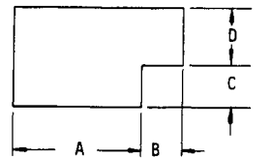

A	B	C	D	THICKNESS	MATERIAL	PART NUMBER	CC	†† RC
.900	.900	2.650	.650	.010	Polyester (255-0417-00)	342-0227-00	I	
1.125	.750	.625	.355	.010	Polyester (255-0427-00)	342-0326-00	G+	
1.450	.900	.250	.650	.010	Polyester (255-0427-00)	342-0341-00	K-	
1.600	2.000	.400	1.200	.002	Polyester (255-0319-00)	342-0256-00	G	
1.900	.450	.700	1.100	.010	Polyester (255-0427-00)	342-0129-00	G+	
2.250	.750	.750	1.000	.005	Polyester	342-0199-00	G-	
3.540	.350	.525	2.525	.008	Epoxy Glass Laminate	342-0513-01	J-	
6.800	4.200	3.650	5.650	.002	Polyester (255-0319-00)	342-0309-00	I	
9.750	1.250	1.750	7.250	.002	Polyester (255-0319-00)	342-0310-00	I	

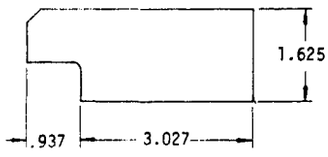

342-0297-00
.010 Polyester (255-0417-00)
CC- C+

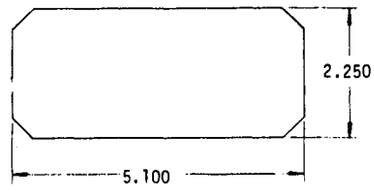

342-0109-00
.007 Nomex (252-0633-00)
CC- F

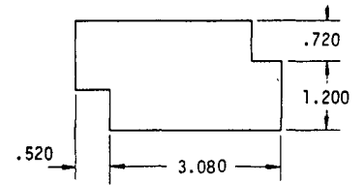

342-0317-00
.007 Polyimide (252-0633-00)
CC- J

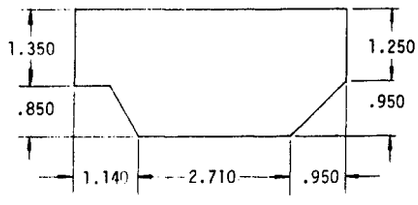

342-0330-00
.010 Polyester (255-0427-00)
CC- H-

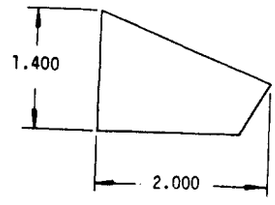

342-0128-00
.010 Polyester (255-0427-00)
CC- F+

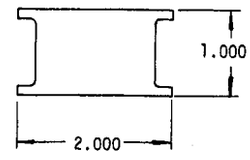

342-0096-00
.010 Cellulose Acetate
(255-0224-00) CC- D

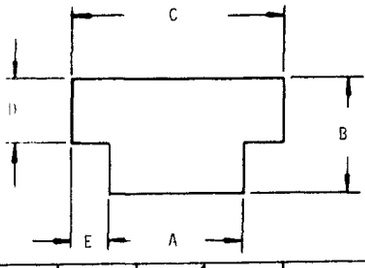

PART NUMBER	A	B	C	D	E	CC
342-0490-00 .010 Polyester	1.750	1.490	2.750	.840	.500	G+
342-0466-01 .002 Polyester w/Adhesive Back	2.750	4.600	6.175	4.140	1.000	J-

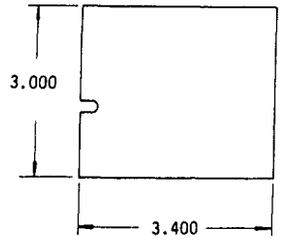

342-0293-00
.010 Polyester (255-0417-00)
CC- E+

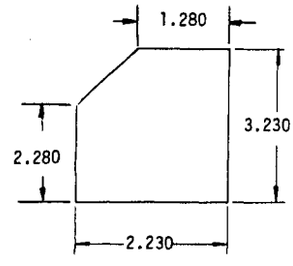

342-0248-00
.002 Polyester (255-0319-00)
CC- G-

INSULATORS (CONT)

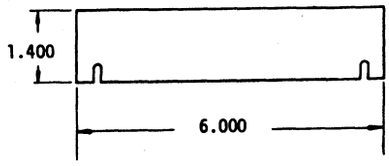

342-0483-00
Insulator, Plate (Transistors)
.031 Thk Fiber Sheet
CC- F-

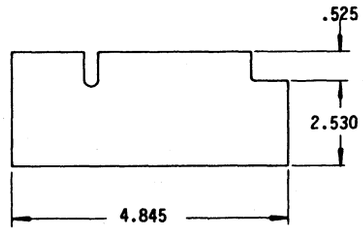

342-0294-00
.010 Polyester (255-0417-00)
CC- E +

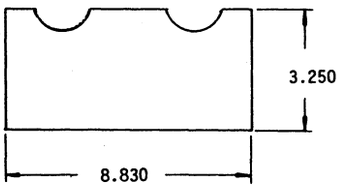

342-0540-00 CC: H
.010 Polyester, Adhesive One Side

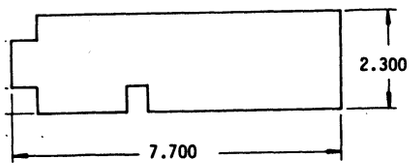

342-0240-00
.010 Polyester (255-0427-00)
CC- G

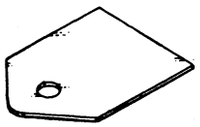

		CC:
342-0509-00 .140 Dia Hole, Silicone Rubber	.865 x .650 x .002 Thk	E-
342-0624-00 .140 Dia Hole, Silicone Rubber	.865 x .650 x .010 Thk	D+
342-0311-00 .143 Dia Hole, Mica	.860 x .660 x .002 Thk	B+

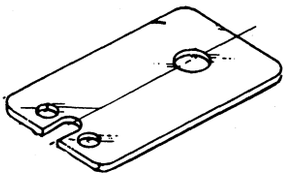

342-0203-00
For TO-220 (RCA) Trans
.860 Lg x .500 W, .004 Thk Mica
CC- B-

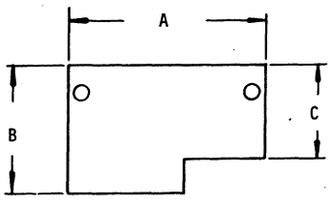

PART NUMBER	A	B	C	DIA HOLES	CC
342-0200-00 .005 Polyester	2.320	1.500	1.100	.187 (2)	G-
342-0246-00 .010 Polyester	5.250	3.180	1.450	.312 (1)	J-
342-0412-00 .032 Fiber (252-0504-00)	4.750	2.250	.700	.250 (1)	G

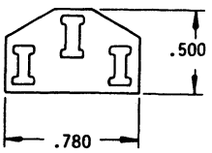

342-0290-00
.040 Pressed Fiber CC- B
(Power Plug)

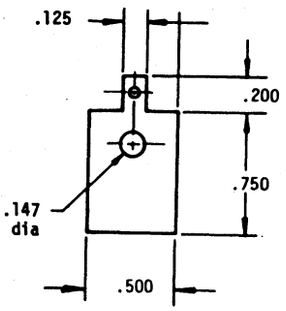

342-0476-00 CC: F-
.020 Hard Anodized Aluminum

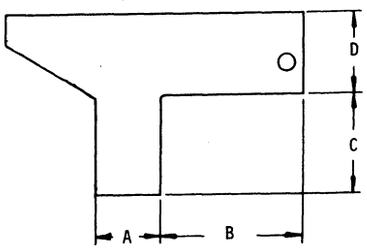

PART NUMBER	A	B	C	D	DIA HOLES
342-0518-00 .005 Fiber (252-0537-00)	1.350	2.210	1.650 CC: G+	.900	.270(3)
342-0519-00 .005 Fiber (252-0537-00)	1.350	2.210	.900 CC: G+	1.650	.200(2)

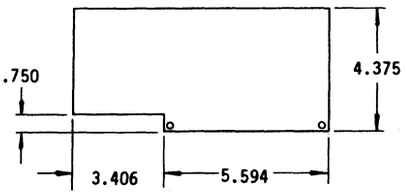

342-0084-00
.020 Polycarbonate (255-0295-00)
.250 dia. holes CC- G-

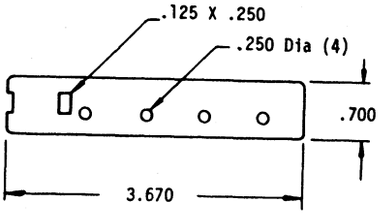

342-0533-00 CC: H+
Silicon Rubber

INSULATORS (CONT

5

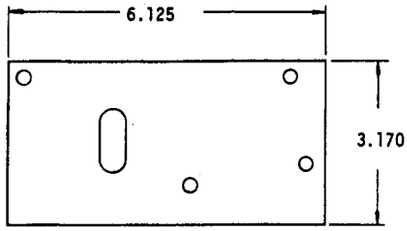

342-0486-00
Insulator, Plate (Pr 1 interconnect EC Brd)
.032 Cellulose Fiber Board
CC- F

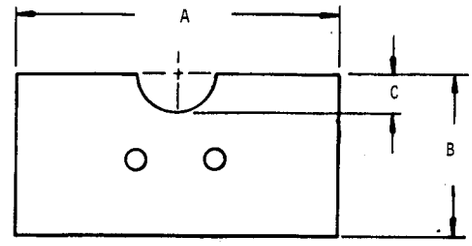

PART NUMBER	A	B	C	DIA HOLES	CC
342-0460-00	2.100	1.050	.250	.140 (2)	E+
342-0590-00	4.150	1.825	.380	NONE	G

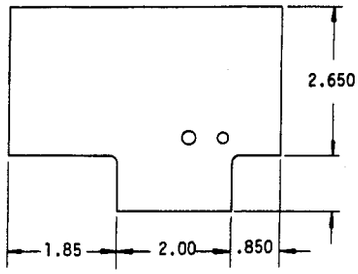

342-0164-00 CC: E+
342-0175-00 CC: E-
(Diff. Hole Spacing)
.010 Polyester (255-0417-01)

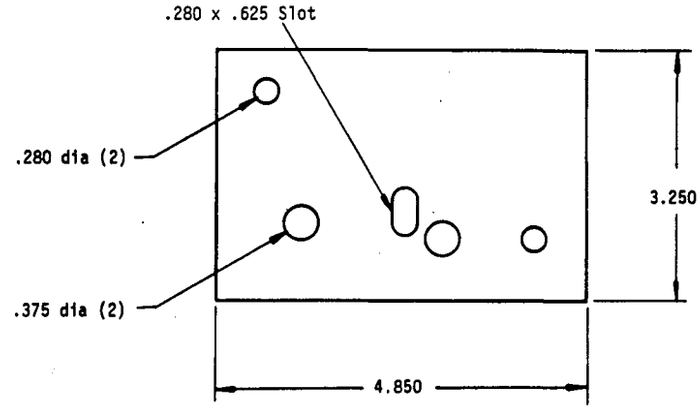

342-0402-00 CC: G
.010 Polyester (255-0427-00) w/Adhesive Back

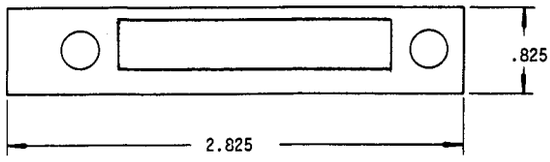

342-0537-00
Fiber, Black, .125 Dia Holes
Slot: 1.775 x .300 CC: G

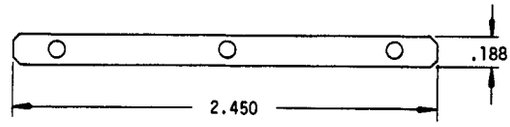

342-0167-00
.010 Epoxy Glass Laminate (254-0580-00)
.101 dia. holes CC- G+

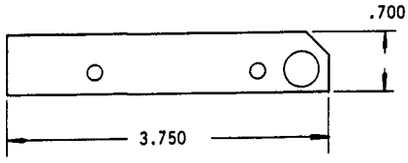

342-0040-01
.094 Phenolic (254-0531-00)
.203 (2) & .422 (1) dia. holes
CC- G

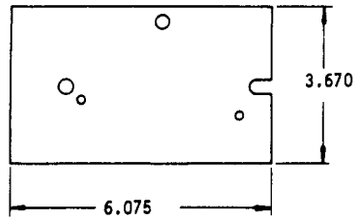

342-0205-00
.005 Polyester (002-1028-00)
CC- E-

342-0242-00
Variable Resistor Insul.
.020 Polycarbonate (255-0295-00)
.265 dia. hole CC- G-

342-0267-00 CC: G
Insul. Transformer (dotted area cut away)
.005 Polyimide (255-0275-00)
.600 x .600 x .480, .125 Dia Hole

INSULATORS (CONT)

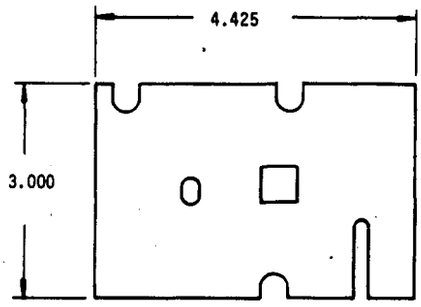

342-0497-00
Insulator, Plate (Ckt Bd HV) CC- G+
.010 Polyester (255-0417-00)

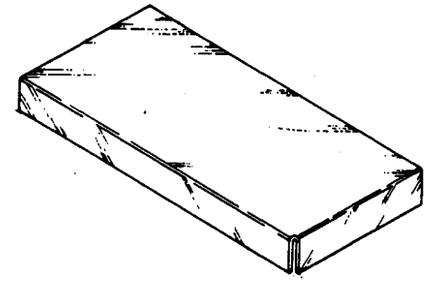

342-0192-00
.020 Polycarbonate (255-0295-00)
14.325 x 6.500 CC-H

342-0480-00 CC: H+
.015 Fiber (252-0523-00)
5.200 x 3.750 x 1.375

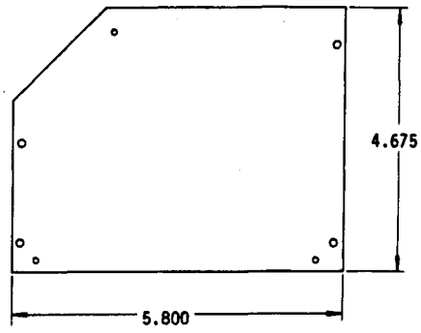

342-0183-00
.031 Epoxy Laminate (254-0546-00)
.094 (3) & .141 (4) dia. holes
CC- I+

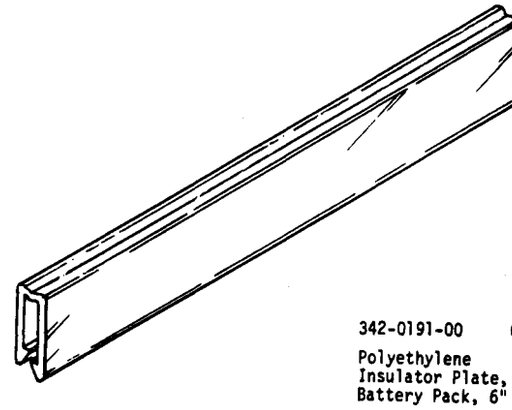

342-0191-00 CC: C-
Polyethylene
Insulator Plate,
Battery Pack, 6" Lg.

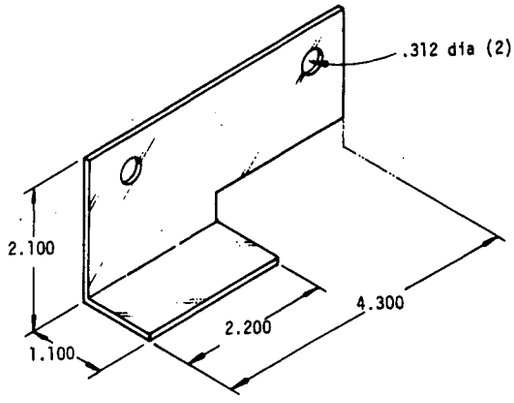

342-0414-00 CC: G+
.032 Fiber (252-0504-00)

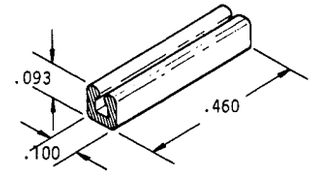

342-0478-00 CC: C
Insulator, Terminal
Material (255-0713-00)

INSULATORS (CONT)

5

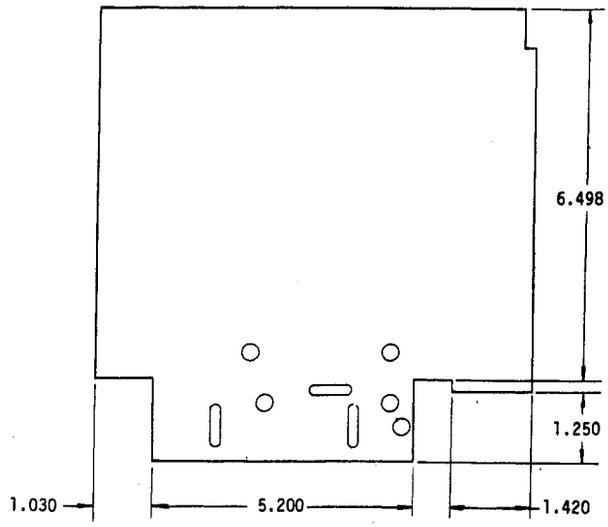

342-0239-00
.010 Polyester (255-0417-00)
CC-G+

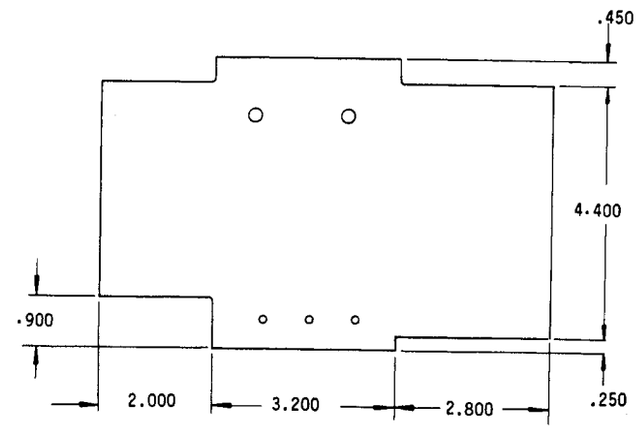

342-0238-00
.002 Polyimide (255-0535-00)
CC- I-

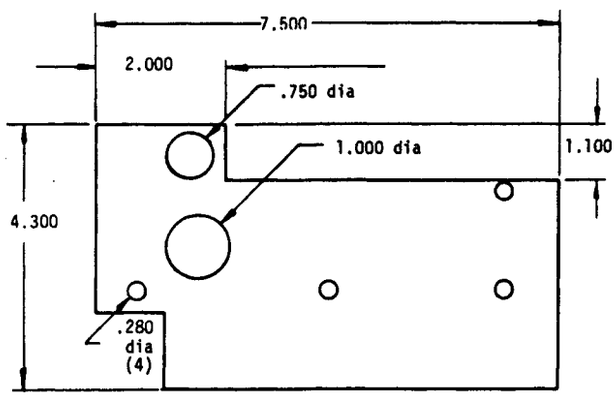

342-0393-00 CC: H-
.032 Fiber (252-0504-00)

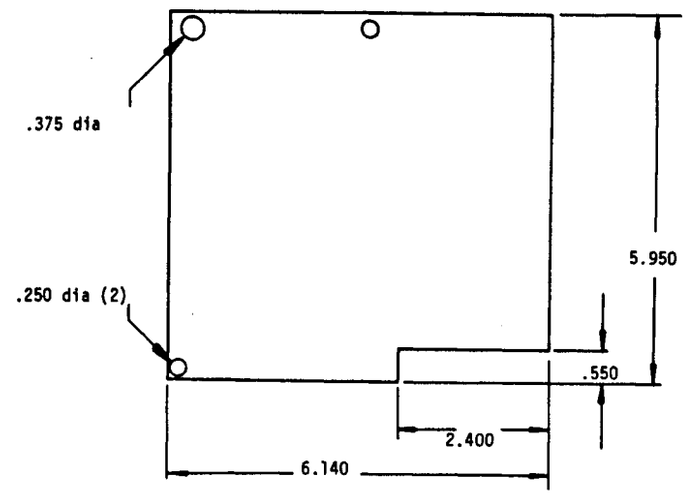

342-0400-00 CC: G
.031 FIBER (252-0504-00)

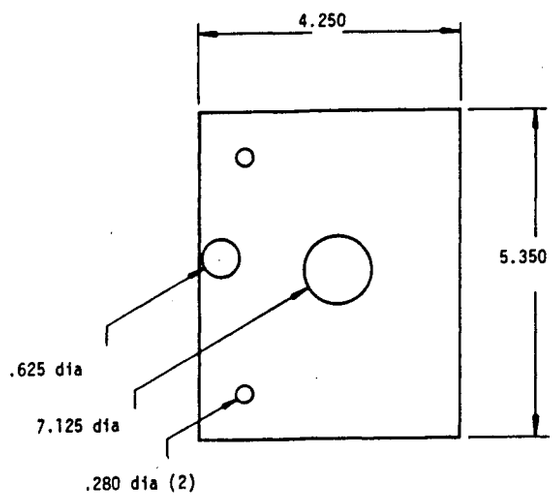

342-0394-00 CC: G-
.032 FIBER (352-0504-00)

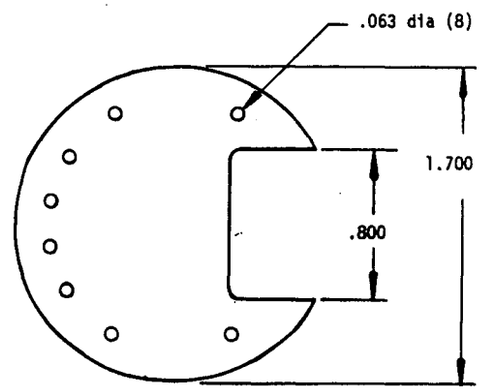

342-0377-00 CC: F+
.010 CAB (255-0224-00)

INSULATORS (CONT)

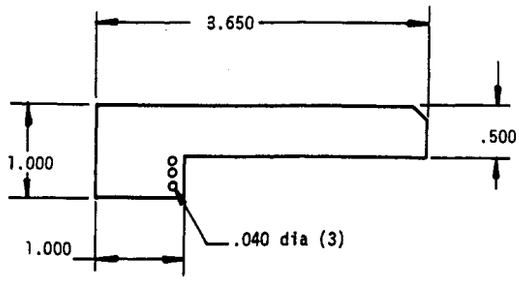

342-0453-00
.010 POLYESTER (255-0417-00)

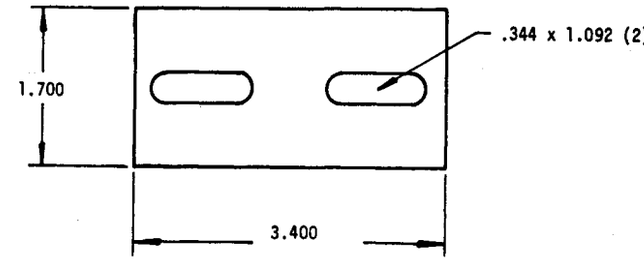

342-0452-00 CC: G+
.005 POLYIMIDE (255-0275-00)

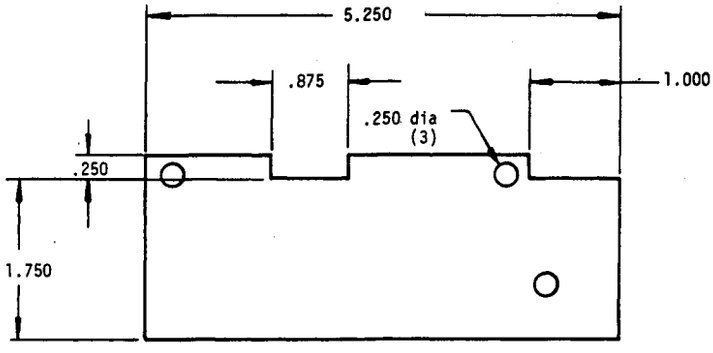

342-0369-00 CC: G
.031 FIBER (252-0504-00)

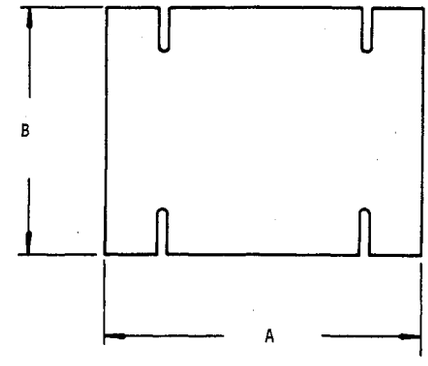

214-1060-00 CC: H-
Insulating Plate, Mica
A: 1.625, B: .750

342-0395-00 CC: F-
.005 Polyester (254-0601-00)
A: 2.050, B: 1.625

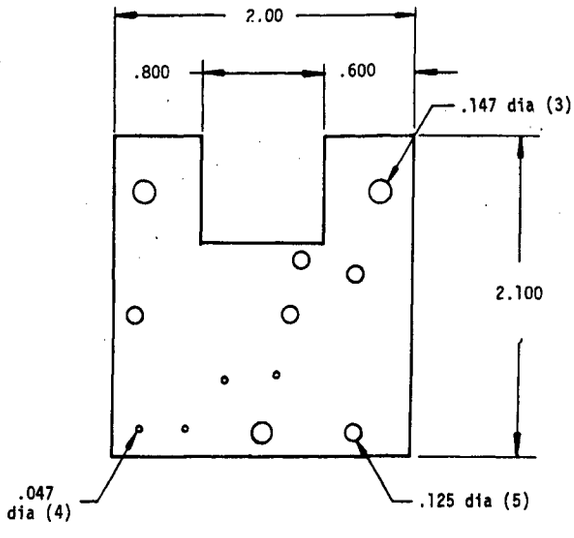

342-0409-00 CC: I+
.062 EPOXY GLASS LAMINATE (254-0566-00)

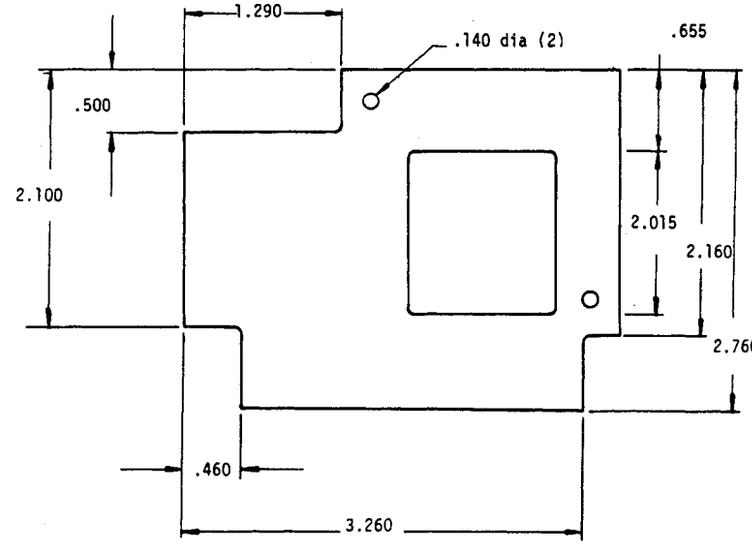

342-0405-00 CC: F+
.060 POLYCARBONATE (255-0200-00)

5

INSULATORS (CONT)

5

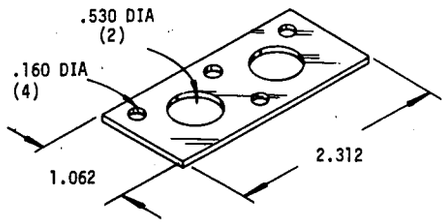

342-0097-00
.020 FISH PAPER CC- C

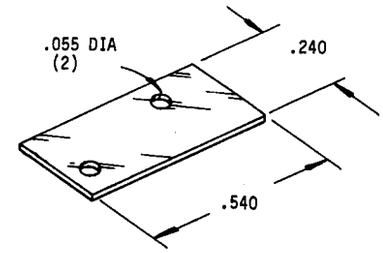

342-0413-00
.005 THICK POLYIMIDE FILM (255-0275-00)
CC- A

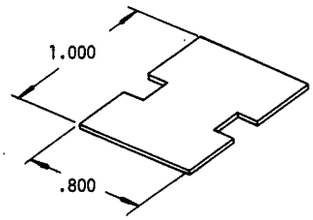

342-0431-00 CC- E
THERMAL-CONDUCTIVE SILICON RUBBER LAMINATED
WITH FIBERGLASS FABRIC
.009 THICK

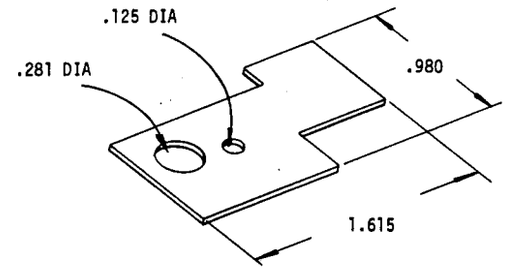

342-0132-01 CC- C
.005 THICK POLYESTER SHEET

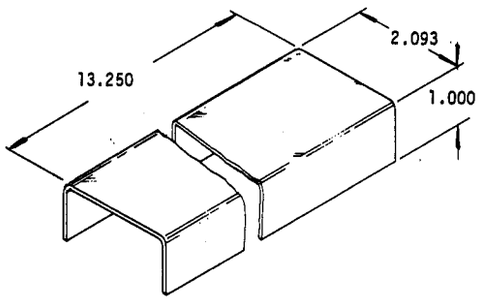

342-0360-00 CC- G
.030 FIBER SHEET (252-0504-00)

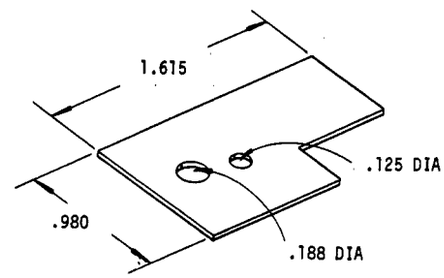

342-0132-00
.005 THICK POLYESTER SHEET
CC- B-

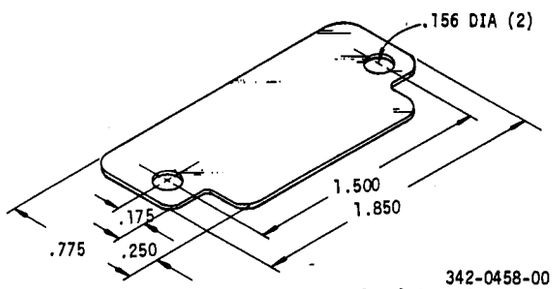

342-0458-00
Insulator, Plate, Transistor,
Mica
CC- C-

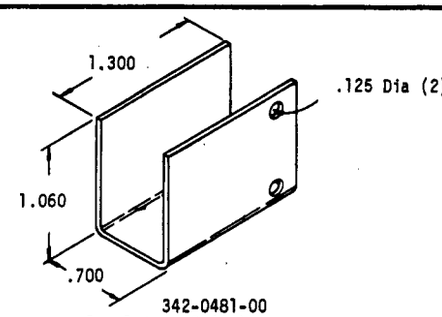

342-0481-00
Insulator, Switch
.060 Polycarbonate, Clear (255-0200-00)

CC- G+

INSULATORS (CONT)

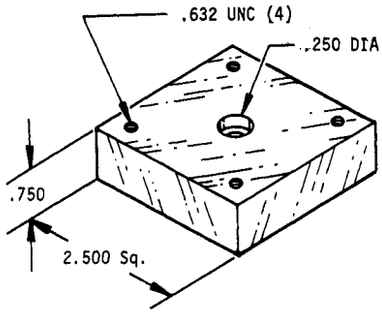

342-0216-00
Block Insulator
.750 Acetal Resin, Blk

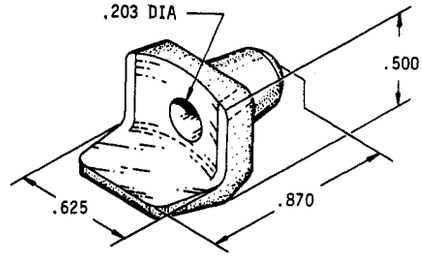

342-0384-00 CC: G-
High Voltage Insulator
Polysulfone, Black (255-0330-00)

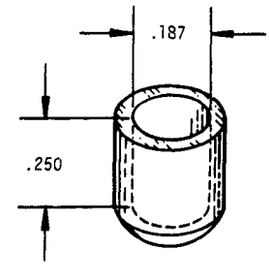

200-2486-00 CC: B-
Cap, Insulating, Vinyl, Black

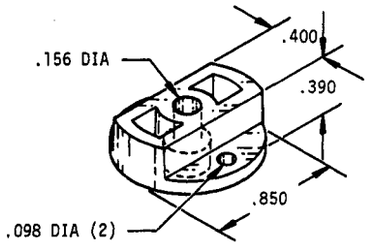

214-1137-00 CC: G
Spacer Insulator
ABS Gray (255-0113-00)

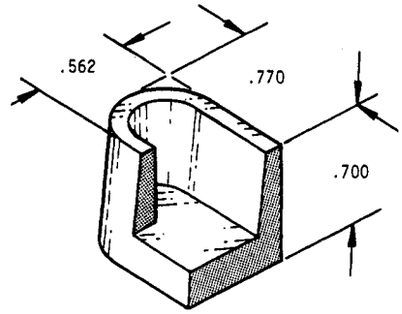

342-0442-00 CC: I-
Wire, Insulator
Silicone, Natural (255-0700-00)

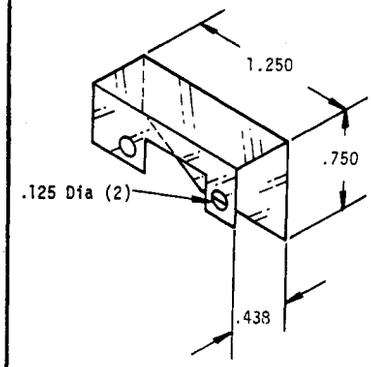

342-0397-00
Shield, Insulating
.010 Polyester (255-0417-00)

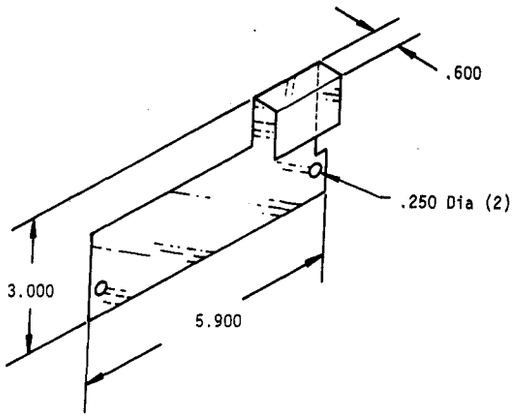

342-0534-00
Circuit Board Insulator
.015 Fiber Sheet (252-0523-00)

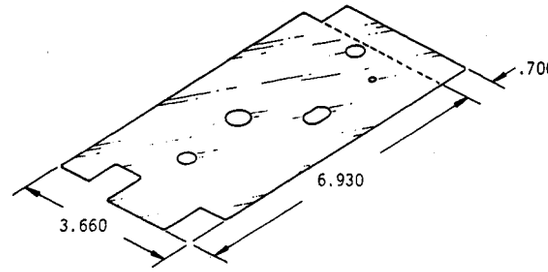

342-0176-00 Without Dotted Area CC: H
342-0176-01 Including Dotted Area CC: F+
Film, Insulator
.005 Polyester (002-1028-00)

INSULATORS (CONT)

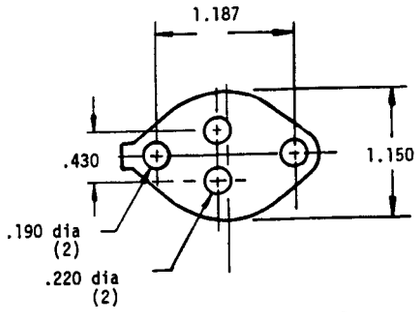

387-0345-00 CC: F+
Hard Anodized Aluminum
.021 Thick

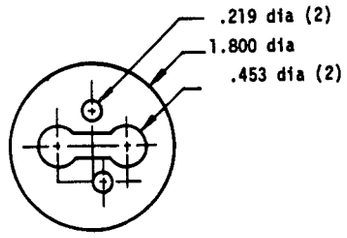

342-0419-00 CC: F+
.005 Polyimide (255-0275-00)

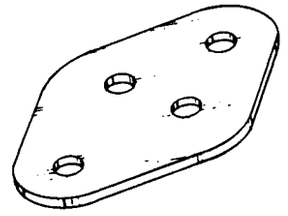

214-1213-00 CC: N-
TO-3
BEO 99.5%

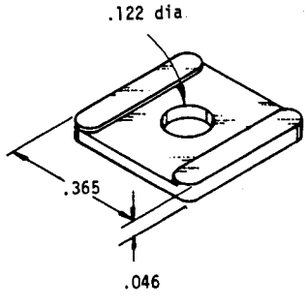

342-0374-00 CC: F-
Polyphenylene Sulfide (255-0538-00)

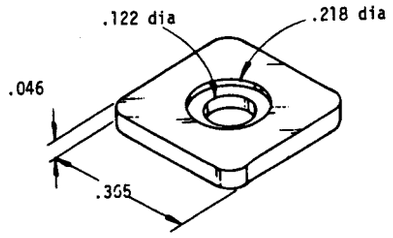

342-0373-00 CC: F
Polyphenylene Sulfide (255-0538-00)

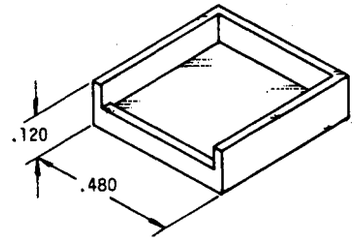

342-0389-00 CC: E-
Nylon (255-0548-00)

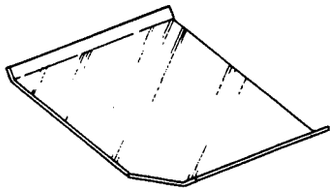

342-0051-00
.020 Polycarbonate
2.250 x 1.188
CC- G

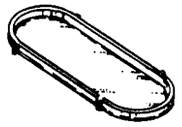

342-0245-00
H.V. Leads Insulator CC- F
Acetal Resin (254-0998-00)
1.230 x .490

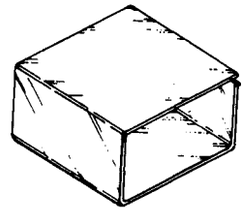

342-0250-00 1.100 Long CC-G-
342-0320-00 1.413 Long CC-G-
Switch (Pwr) Insul.
Vinyl (254-0960-00)
1.400 x .820

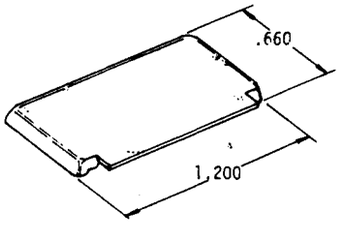

342-0443-00 CC: F-
Polycarbonate, Tek Blue (255-0527-01)
Insulator, Hinge

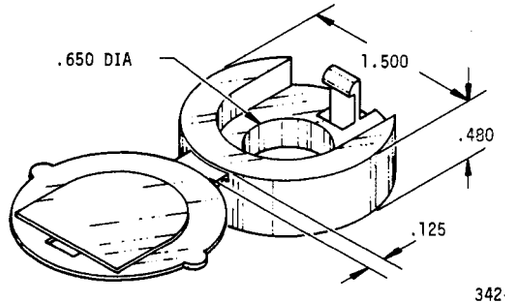

342-0541-00 CC: H-
Insulator, Plate
Polypropylene (255-0568-00)

INSULATORS (CONT)

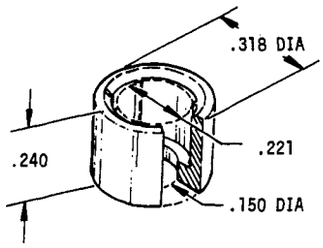

214-0781-00 CC: C-
Insulator, Circuit Board Mount
Polypropylene (254-0985-00)

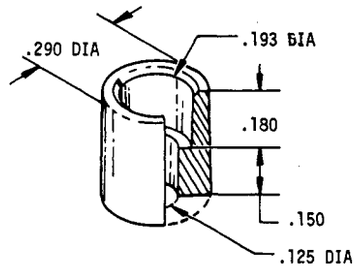

214-0781-01 CC: B
Insulator, Circuit Board Mount
Polypropylene (254-0985-00)

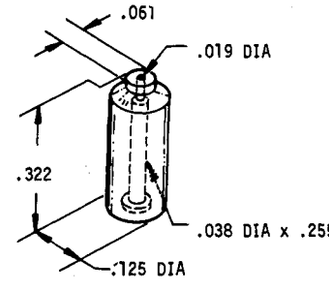

342-0262-00 CC: G
Bushing, Insulator
Polyethylene (255-0071-00)

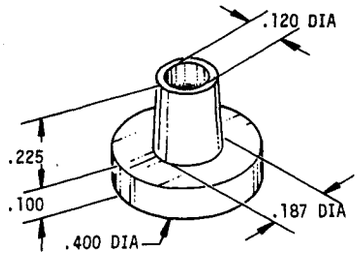

342-0493-00 CC: E+
Insulator, Bushing
Polyphenylene Sulfide (255-0538-00)

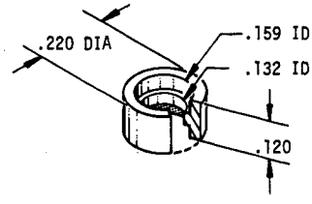

342-0499-00 CC: F+
Insulator, Sleeve
Teflon (255-0140-00)

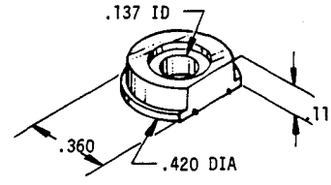

342-0488-01 CC: E
Spacer, Transistor
Polyphenylene Sulfide (255-0538-00)

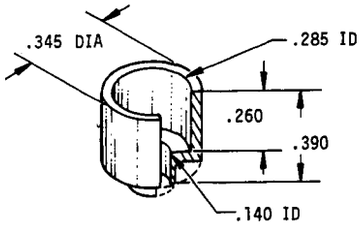

342-0524-00 CC: F
Insulator, Bushing
White Polyamide (254-0940-00)

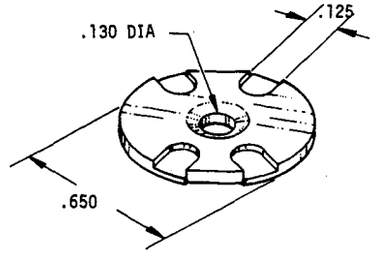

342-0575-00 CC: D+
Insulator, Plate, Pot.
Polyurethane (255-0621-01)

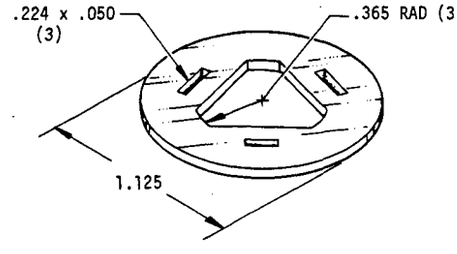

342-0535-00 CC: F
Insulator, Plate
Polyphenylene Sulfide (255-0538-00)

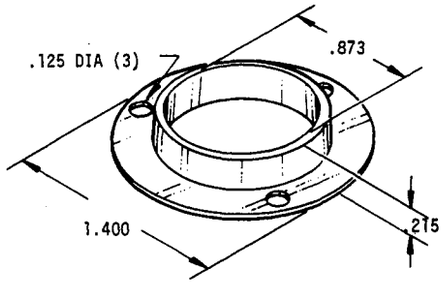

342-0510-00 CC: F
Insulator, Bushing
Polysulfone, Black (255-0330-00)

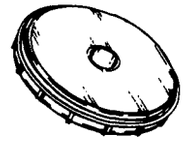

342-0075-00
Insulating Washer CC- I
255-0438-00 w/255-0553-00
.640 ID, 3.430 OD

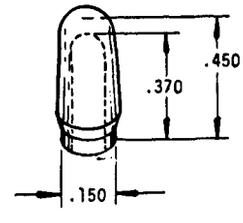

342-0444-00
Insulated Switch Handle
Gray Vinyl
CC- D

INSULATORS (CONT)

5

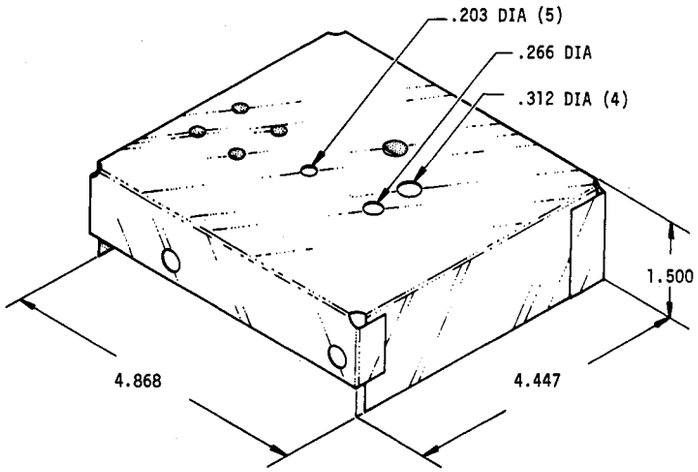

342-0210-00 CC: J
Insulator, Power Supply
.005 Polyimide (255-0275-01)

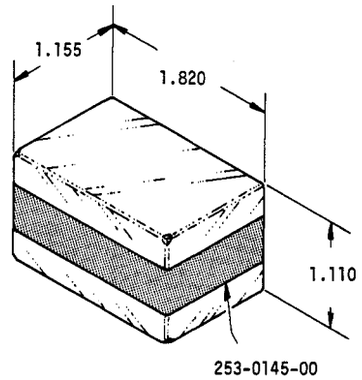

342-0188-00 CC: J+
Insulator (Line Converter)
.005 Polyester (254-0601-00)

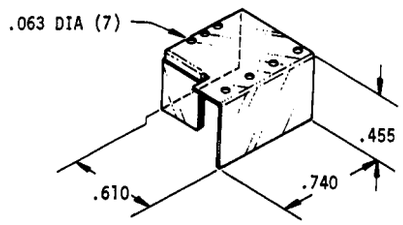

342-0268-00 CC: H
Insulator, Transformer
.005 Polyimide (255-0275-00)

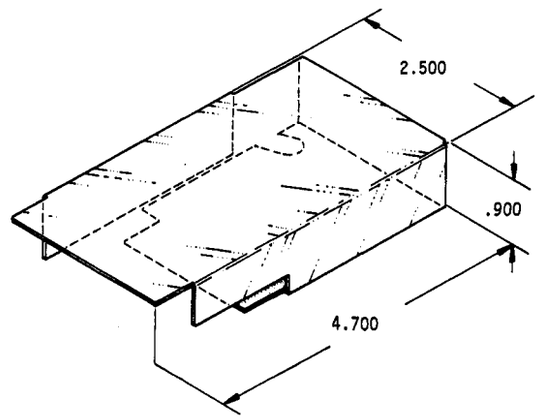

342-0225-00 CC: J
Insulator, Circuit Board
.030 Polycarbonate (255-0371-00)

COST CODE

(CC COLUMN)

CODE	A	B	C	D	E	F	G	H	I	J	K	L	M	N	O
≈ VALUE with +	.75¢	2¢	3.75¢	6¢	10¢	18¢	35¢	60¢	$1	$2	$3.75	$6	$10	$18	$35+
≈ VALUE no suffix	.5¢	1.5¢	3¢	5¢	8¢	15¢	25¢	50¢	75¢	$1.50	$3	$5	$8	$15	$25
≈ VALUE with -	.2¢	1.25¢	2.5¢	4.25¢	7¢	13¢	22¢	40¢	65¢	$1.25	$2.50	$4.25	$7	$13	$22

NOTE: Costs may vary from order to order due to order quantities, vendor, etc.

INSULATORS (CONT)

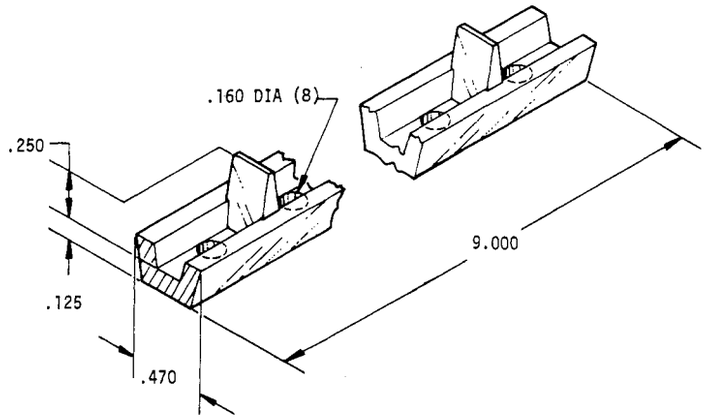

342-0484-00 CC: H-
Insulator, Electrode Segment
Polysulfone, Black (255-0330-00)

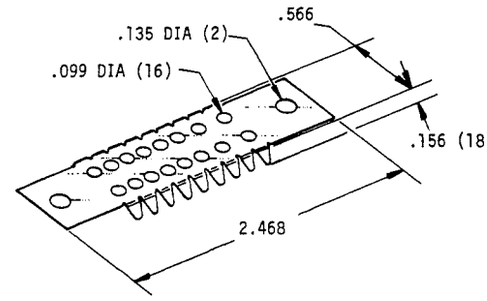

214-0890-00 CC: K
Insulator, Readout
.016 Aluminum (251-0145-00)

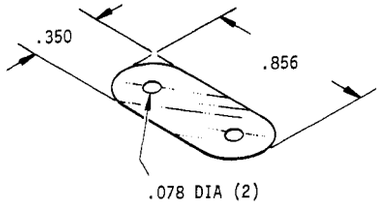

342-0542-00 CC: C-
Insulator Plate
.010 Polyester

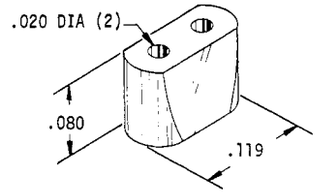

342-0568-00 CC: E-
Insulator, Contact
Polyurethane (255-0655-00)

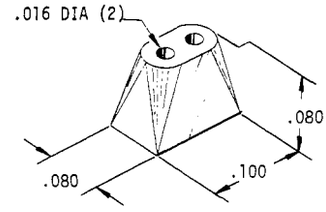

342-0565-00 CC: E-
Insulator, Contact
Polyurethane (255-0655-00)

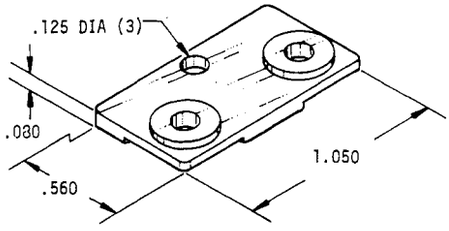

214-0751-00 CC: F+
Insulator, Cartridge Fuse Clips
Polyphenylene Oxide (255-0203-00)

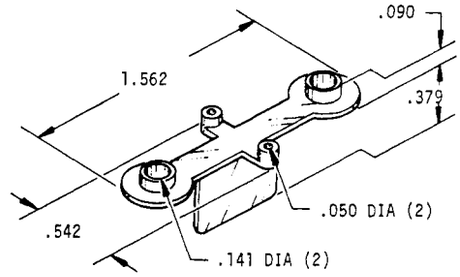

342-0026-00 CC: D-
Insulator, Transistor
Type 66 Nylon

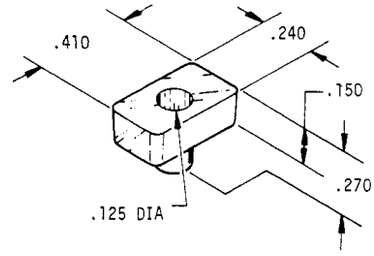

342-0536-00 CC: E+ ††RC: 5B
Insulator, Transistor (TO-220)
Polysulfone (255-0330-00, Black or
255-0719-00, Natural)

INSULATORS (CONT)

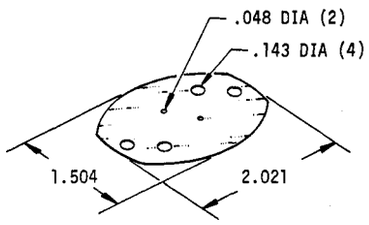

342-0489-00 CC: G-
Insulation, Transistor (TO-3)
.005 Polyimide (255-0780-XX)

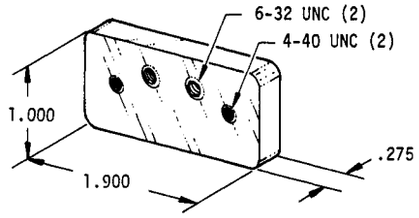

342-0491-00 CC: I-
Insulator, Plate
Polyphenylene (255-0538-00)

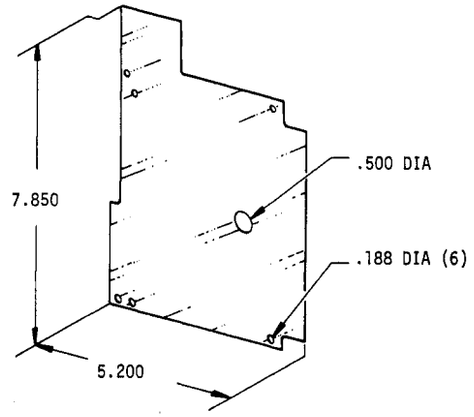

342-0506-00 CC: H-
Insulator, Circuit Board
.010 Polyester (255-0417-00)

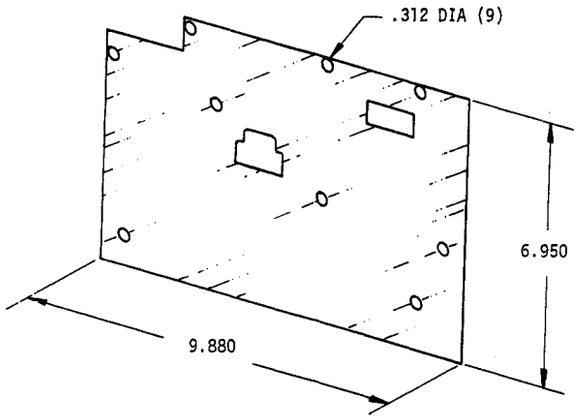

342-0564-00 CC: I
Insulator, Plate
.020 Phenolic Impreg. Fiber Sheet

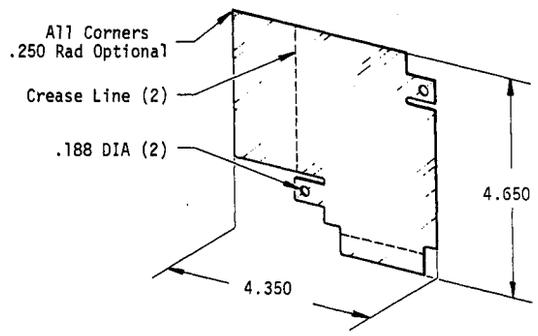

342-0539-00 CC: G+
Insulation, Cable
.020 Fiber Sheet (252-0514-00)

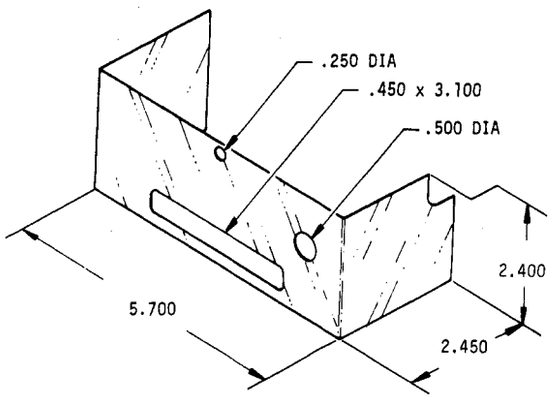

342-0608-00 CC: H-
Insulator, Plate
.010 Polyester, Adhesive One Side

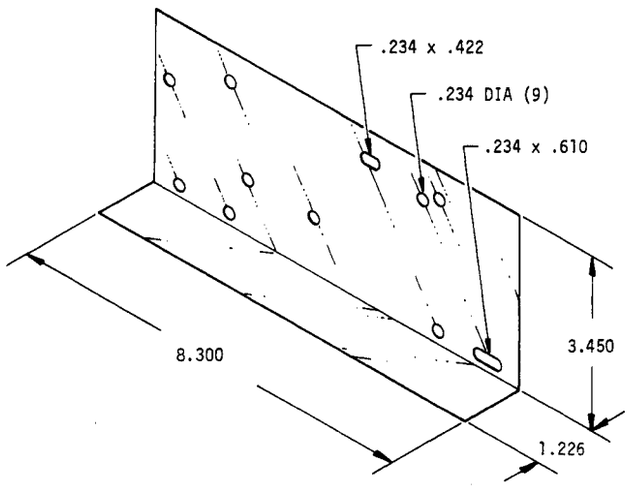

342-0275-00 CC: H
Insulation (H.V.)
.010 Mylar (255-0417-00)

INSULATORS (CONT)

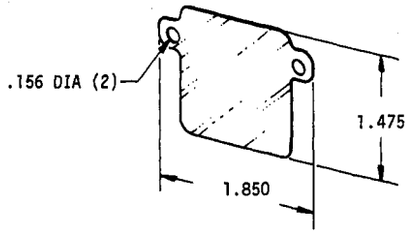

342-0638-00
Insulator, Transistor
Fiberglass Reinforced Silicone Rubber

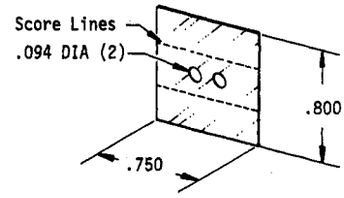

214-0857-00 CC: D
Insulator, Slide Contacts
Paper (252-0538-00)

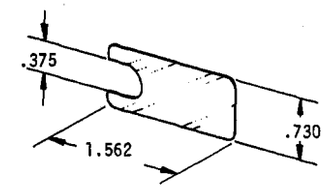

214-0769-00 CC: F
Insulator, Plate
.020 Fish Paper (252-0514-00)

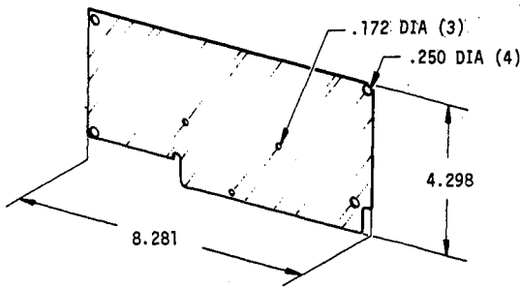

342-0505-00 CC: G+
Insulator, Plate
.101 Polyester (255-0417-00)

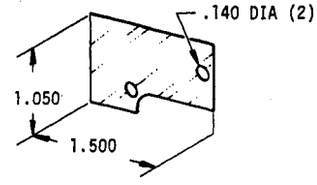

342-0587-00 CC: F
Insulator, Power Switch
.010 Polyester

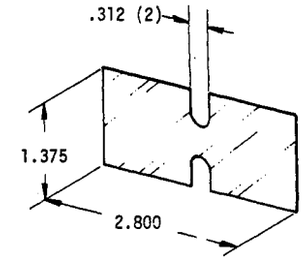

342-0596-00 CC: H-
Insulator, Capacitor
.031 Fiber Sheet (252-0504-00)

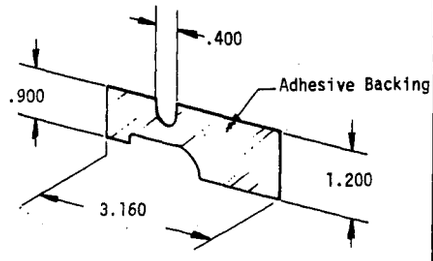

342-0559-00 CC: H
Insulator, Plate
.010 Polyester

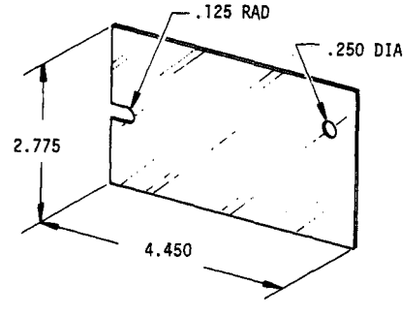

342-0615-00 CC: F
Insulator, Plate
.031 Fiber Sheet

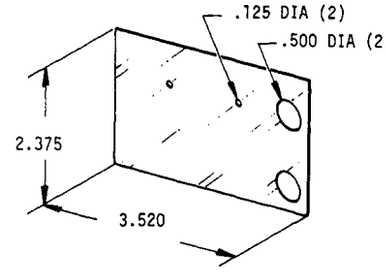

342-0492-00 CC: H
Insulator, Film Bracket
.005 Polyimide

INSULATORS (CONT)

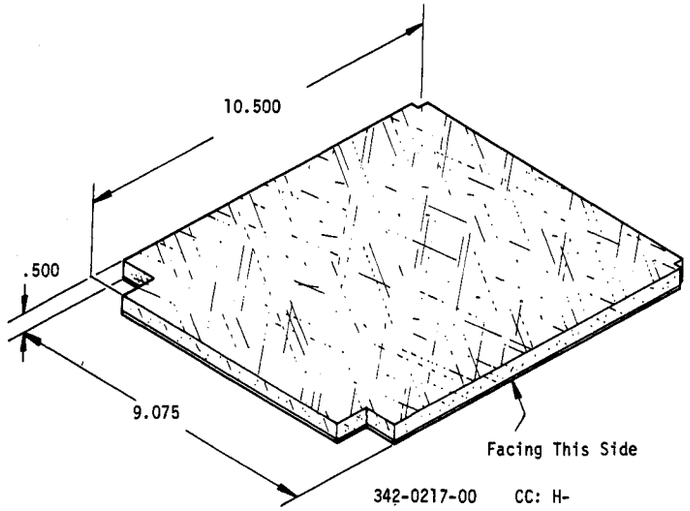

342-0217-00 CC: H-
Insulator Processor
Fiber Glass

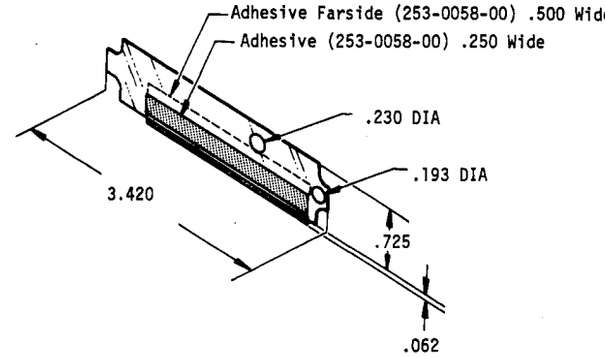

214-0946-00 CC: H-
Insulator, Plate
.005 Fish Paper (252-0537-00)

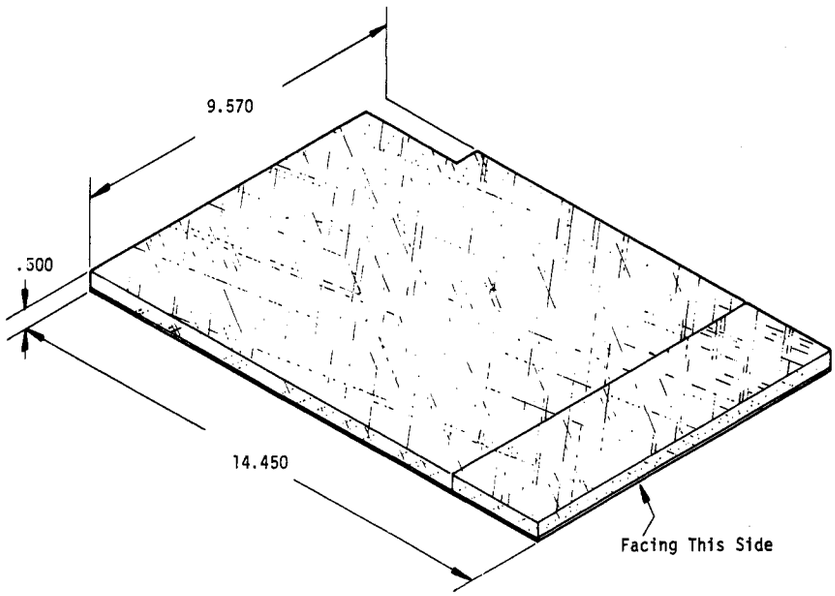

342-0218-00 CC: I-
Insulation, Processor
Fiber Glass

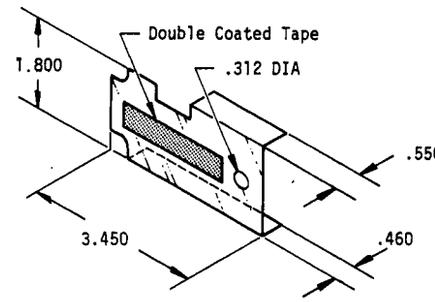

342-0259-00 CC: J+
Insulator, Shield
.005 Polyester (254-0601-00)

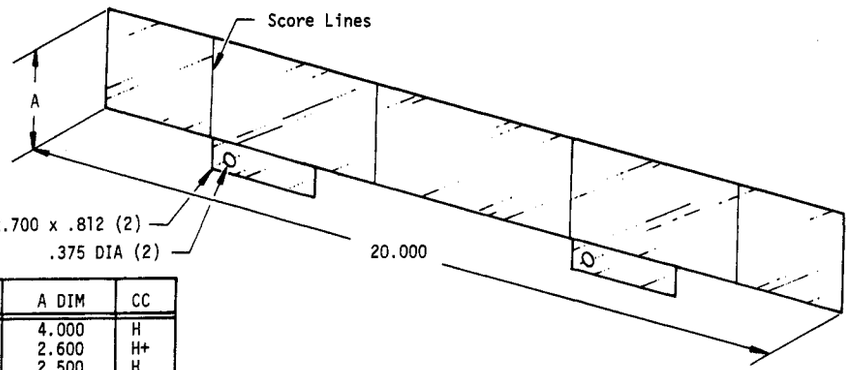

PART NUMBER	A DIM	CC
342-0417-00	4.000	H
342-0601-00	2.600	H+
342-0603-00	2.500	H

.010 Paper (252-0515-00)

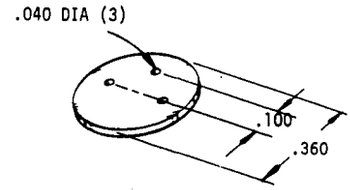

214-0817-00 CC: H-
Insulator, Transistor (TO-5)
Beryllium Oxide

NOTES

5

COST CODE

(CC COLUMN)

CODE	A	B	C	D	E	F	G	H	I	J	K	L	M	N	O
≈ VALUE with +	.75¢	2¢	3.75¢	6¢	10¢	18¢	35¢	60¢	$1	$2	$3.75	$6	$10	$18	$35+
≈ VALUE no suffix	.5¢	1.5¢	3¢	5¢	8¢	15¢	25¢	50¢	75¢	$1.50	$3	$5	$8	$15	$25
≈ VALUE with -	.2¢	1.25¢	2.5¢	4.25¢	7¢	13¢	22¢	40¢	65¢	$1.25	$2.50	$4.25	$7	$13	$22

NOTE: Costs may vary from order to order due to order quantities, vendor, etc.

TEK ALUMINA ELECTRICALLY INSULATING HEAT SINKS AND FLAT INSULATORS

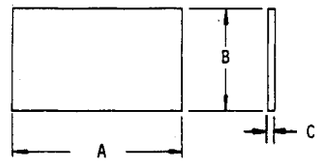

LENGTH (A)	WIDTH (B)	THICKNESS (C)	STANDARD MATERIAL	PART NUMBER	* MAXIMUM THICKNESS	** CC	†† RC
2.320	.720	.040	96 White	204-0462-01	.100		
2.320	.630	.040	96 White	204-0541-00	.100		
2.000	1.000	.040	96 White	204-0486-00	.150		
1.960	.520	.680	85 White	381-0243-00			
1.960	.406	.520	85 White	381-0225-00			
1.550	.720	.040	96 White	204-0462-02	.100		
1.000	.850	.040	96 White	307-0210-02	.125		
1.000	.400	.040	96 White	342-0211-02	.125		
.920	.520	.025	96 White	342-0082-00	.125		5A
.850	.300	.062	96 White	204-0488-02	.100		
.850	.300	.040	96 White	204-0488-01	.100		
.850	.300	.025	96 White	204-0488-00	.100		
.750	.600	.100	96 White	342-0582-00	.150		
.750	.600	.040	96 White	342-0582-01	.150		
.700	.640	.030	96 White	204-0611-00	.150		
.398	.200	.025	85 White	361-0687-00	.100		
.365	.365	.030	96 White	204-0499-00	.100		
.325	.325	.030	96 White	204-0585-00	.100		

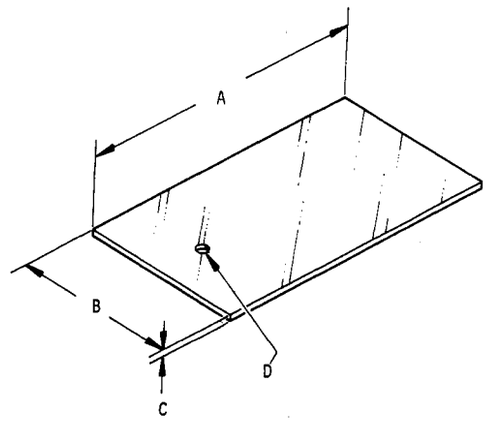

LENGTH (A)	WIDTH (B)	THICKNESS (C)	HOLES D (DIA)	STANDARD MATERIAL	PART NUMBER	* MAXIMUM THICKNESS	** CC	†† RC
2.900	.950	.025	3 (.130)	96 White	342-0546-00			3G
2.600	1.525	.060	10 (.062)	96 White	204-0460-00	.100		
2.000	1.000	.097	2 (.156) 3 (.044) 3 (.038)	96 White	204-0503-01	.150		
1.980	.1980	.060	1 (.225)	96 White	342-0461-00	.125		
1.880	.900	.045	2 (.156)	85 White	342-0449-00	.150		
1.625	.800	.160	2 (.188)	96 White	342-0597-00			
1.480	1.020	.060	3 (.070) 1 (.125)	96 White	204-0603-00	.150		
1.350	.912	.045	6 (.030)	96 White	204-0486-02			
1.325	1.000	.040	2 (.066)	96 White	204-0651-00	.125		
1.000	1.000	.040	4 (.094)	96 White	204-0604-00	.100		
.750	.600	.100	1 (.146)	85 White	342-0420-00	.125		4D
.750	.600	.040	1 (.125)	96 White	342-0328-00	.125		4E

* DIFFERENT THICKNESS OR MATERIALS ARE AVAILABLE FOR SHORT RUN OR PRODUCTION QUANTITIES. CONTACT HCM MATERIALS AND COMPONENT ENGINEERING: John Di Lazzaro, Ext. 3975; Bob Rogers, Ext. 3971; Mike Ehlert, Ext. 3972, FOR FURTHER ASSISTANCE

** COST INFORMATION AVAILABLE ON REQUEST.

TEK ALUMINA ELECTRICALLY INSULATING HEAT SINKS AND FLAT INSULATORS

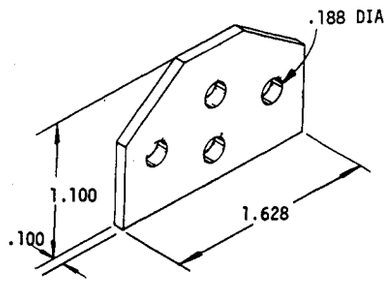

214-1610-00 ††RC: 4C

Material: 96 White
* Maximum Thickness: .250

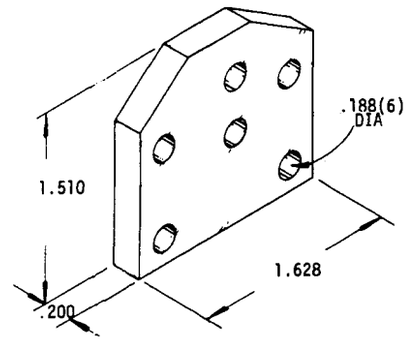

214-1581-00

Material: 96 White
* Maximum Thickness: .250

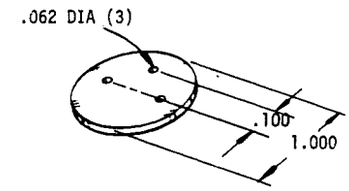

214-1138-00

Material: 96 White
.060 Thick
* Maximum Thickness: .100

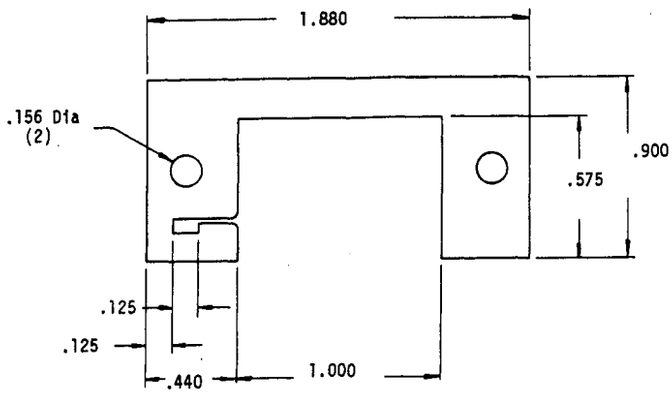

342-0449-01 ††RC: 4F

Material: 85 White
.045 Thick
* Maximum Thickness: .150

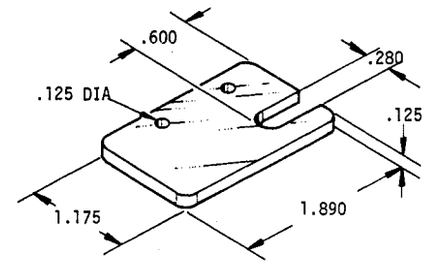

204-0602-00

Material: 85 White
* Maximum Thickness: .150

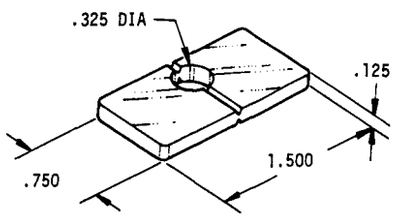

342-0555-00 ††RC: 4B

Material: 96 White
* Maximun Thickness: .150

†† CATALOG RELIABILITY CODES

USAGE/YR	CODE
≥10	1
≥100	2
≥1 000	3
≥10 000	4
≥100 000	5
≥1 000 000	6
≥10 000 000	7

FAILURE FREQ	CODE		%/YR (median)
1/100 000	A	=	.001
1/50 000	B	=	.002
1/20 000	C	=	.005
1/10 000	D	=	.01
1/5 000	E	=	.02
1/2 000	F	=	.05
1/1 000	G	=	.1
1/500	H	=	.2
1/200	I	=	.5
1/100	J	=	1.0+

For further explanation of this code, see page 0-25.

ELECTRICAL INSULATORS

CERAMIC WASHERS

OD	ID	THICKNESS	PART NUMBER	CC	MAXIMUM THICKNESS AVAILABLE	COMMENTS
.060	.012	.020	361-0818-00		.050	Forsterite
.100	.052	.105	342-0126-00		.125	Alumina
.148	.069	.175	358-0265-00		.200	Alumina
.150	None	.120	337-0419-00		.125	Alumina Porcelain; Slot .030 x .075; stepped
.180	.063	.043	337-0985-00		.100	Forsterite; stepped
.184	.069	.150	358-0092-00		.150	Alumina
.187	.048	.017	361-0150-00		.125	Alumina
.300	.134	.080	361-0555-00		.125	Alumina
.300	.134	.059	361-0555-01			Made from 361-0555-00 above
.300	.134	.055	361-0555-02			Made from 361-0555-00 above
.372	.0465	.040	214-0504-00		.100	Alumina; 4 more holes at .050 near edge
.372	.205	.182	361-0325-00		.200	Alumina; stepped
.400	.250	.020	361-0116-00		.100	Alumina
.495	.300	.080	361-0174-00		.125	Alumina
.4975	.382	.050	361-0253-00		.125	Alumina
.4975	.382	.100	361-0117-00		.125	Alumina

CERAMIC TUBES

[THESE PARTS CAN BE PRODUCED IN ANY LENGTH UP TO 12 INCHES]

OD	ID	LENGTH	PART NUMBER	CC	COMMENTS
.052	.021	1.650	166-0564-00		Steatite
.105	.031	.475	166-0568-00		Steatite
.105	.055	.150	166-0527-00		Steatite
.105	.055	.200	166-0198-00		Steatite
.105	.055	.350	166-0165-00		Steatite
.105	.055	.475	166-0166-00		Steatite
.105	.055	.600	166-0208-00		Steatite
.105	.055	.700	166-0167-00		Steatite
.105	.055	2.000	166-0443-00		Steatite
.105	.055	2.700	166-0595-00		Steatite
.105	.055	3.500	166-0625-00		Steatite
.105	.055	4.500	166-0207-00		Steatite
.105	.055	5.000	166-0310-00		Steatite
.105	.055	5.250	166-0425-00		Steatite
.105	.055	5.900	166-0596-00		Steatite
.120	.090	.195	281-0673-00		Alumina
.268	.158	2.640	361-0335-00		Alumina; fixed length; chamfered 1 end
.275	.158	1.000	361-0469-00		Alumina
.750	.563	2.219	166-0109-00		Alumina

CERAMIC RODS

[THESE PARTS CAN BE PRODUCED IN ANY LENGTH UP TO 12 INCHES]

RECTANGULAR CROSS SECTION

WIDTH	THICKNESS	LENGTH	PART NUMBER	CC	COMMENTS
.065	.030	.440	377-0150-00		Alumina Porcelain; radiused edges
.065	.030	.550	377-0048-00		Alumina Porcelain; radiused edges
.200	.100	.150	386-2894-00		Alumina; interior slot .130" x .013"
.200	.125	.325	377-0089-02		Alumina; 2 slots on edges .048" x .028"
.250	.080	.350	377-0290-01		Alumina; 1 hole on face .057 dia; 2 slots on edges .028 x .127
.300	.125	.625	377-0191-01		Alumina; 2 slots on edges .048" x .028"

CIRCULAR CROSS SECTION

OD	LENGTH	PART NUMBER	COMMENTS
.042	.500	166-0569-00	Alumina
.043	.140	214-2702-00	Alumina

ELLIPTICAL CROSS SECTION

WIDTH	THICKNESS	LENGTH	PART NUMBER	COMMENTS
1.000	.313	3.515	276-0021-00	Alumina Porcelain
1.000	.313	1.750	276-0075-00	Alumina Porcelain

Any of these ceramic insulators can be modified to meet the users needs. For more specific information call John DiLazzaro, 627-3972; Bob Rogers, 627-3971; or Mike Ehlert, 627-3975 (Item Materials & Component Engineering.)

CROSS REFERENCE INDEX

HEAT SINKS AND INSULATORS

PART NUMBER	TYPE	DESCRIPTION	PAGE NO.	§§ ST
166-0109-00	Insulator	Ceramic Tube	5-50	CS
166-0165-00	Insulator	Ceramic Tube	5-50	CR
166-0166-00	Insulator	Ceramic Tube	5-50	CR
166-0167-00	Insulator	Ceramic Tube	5-50	CR
166-0198-00	Insulator	Ceramic Tube	5-50	CR
166-0207-00	Insulator	Ceramic Tube	5-50	CR
166-0208-00	Insulator	Ceramic Tube	5-50	CS
166-0310-00	Insulator	Ceramic Tube	5-50	CR
166-0425-00	Insulator	Ceramic Tube	5-50	CR
166-0443-00	Insulator	Ceramic Tube	5-50	CS
166-0527-00	Insulator	Ceramic Tube	5-50	CR
166-0564-00	Insulator	Ceramic Tube	5-50	CR
166-0568-00	Insulator	Ceramic Tube	5-50	CR
166-0569-00	Insulator	Ceramic Rod	5-50	CR
166-0595-00	Insulator	Ceramic Tube	5-50	CR
166-0596-00	Insulator	Ceramic Tube	5-50	CR
166-0625-00	Insulator	Ceramic Tube	5-50	PP
200-0669-00	Insulator	Transistor, TO-66	5-30	CR
200-0945-00	Heat Sink	Half Transistor, Dual, TO-18	5-5	CR
200-0945-01	Heat Sink	Half Transistor, Dual, TO-18	5-5	CR
200-1167-00	Heat Sink	Transistor, Heat Stab., TO-18 (2)	5-5	CR
200-1673-00	Heat Sink	Transistor, Heat Stab., TO-106(2)	5-5	CR
200-2486-00	Insulator	Insulator, Cap	5-39	CR
204-0460-00	Insulator		5-48	CR
204-0462-01	Insulator		5-48	CR
204-0462-02	Insulator		5-48	CS
204-0486-00	Insulator		5-48	CR
204-0486-02	Insulator		5-48	CR
204-0488-00	Insulator		5-48	CR
204-0488-01	Insulator		5-4	CR
204-0488-02	Insulator		5-48	CR
204-0499-00	Insulator		5-48	CR
204-0503-01	Insulator		5-48	CR
204-0541-00	Insulator		5-48	CR
204-0585-00	Insulator		5-48	CR
204-0602-00	Insulator		5-49	CR
204-0603-00	Insulator		5-48	CR
204-0604-00	Insulator		5-48	CR
204-0611-00	Insulator		5-48	CR
204-0651-00	Insulator		5-48	CS
210-0811-00	Insulator	Washer, Shoulder	5-29	CR
210-0813-00	Insulator	Washer, Shoulder	5-29	CR
210-0849-00	Insulator	Washer, Shoulder	5-29	CR
210-0859-00	Insulator	Washer, Shoulder	5-29	CR
210-0865-00	Insulator	Washer, Shoulder	5-29	CR
210-0904-00	Insulator	Washer, Shoulder	5-29	CR
210-0909-00	Insulator	Washer, Flat	5-29	CR
210-0910-00	Insulator	Washer, Flat	5-29	CR
210-0921-00	Insulator	Washer, Flat	5-29	CR
210-0935-00	Insulator	Washer, Shoulder	5-29	CR
210-0943-00	Insulator	Washer, Flat	5-29	CR
210-0944-00	Insulator	Washer, Flat	5-29	CS
210-0948-00	Insulator	Washer, Flat	5-29	CR
210-0967-00	Insulator	Washer, Shoulder	5-29	CR
210-0975-00	Insulator	Washer, Shoulder	5-29	CR
210-0983-00	Insulator	Washer, Flat	5-29	CS
210-1031-00	Insulator	Washer, Shoulder	5-29	CS
210-1108-00	Insulator		5-31	CR
210-1111-00	Insulator	Washer, Shoulder	5-29	CS
210-1116-00	Insulator	Washer, Shoulder	5-29	CS
210-1138-00	Insulator	Washer, Transistor	5-49	CR
210-1140-00	Insulator	Washer, Shoulder	5-29	CR
210-1156-00	Insulator		5-29	CR
210-1171-00	Insulator	Washer, Shoulder	5-29	CR
210-1178-00	Insulator	Washer, Shoulder	5-29	CR
210-1181-00	Insulator	Washer, Shoulder	5-29	CR
210-1289-00	Insulator	Washer, Shoulder	5-29	CR
210-1324-00	Insulator	Washer, Shoulder	5-29	CR
210-1329-00	Insulator	Washer, Shoulder	5-29	CR
210-1364-00	Insulator	Washer, Shoulder	5-29	CR
214-0269-00	Heat Sink	Transistor, TO-5	5-2	CR
214-0289-00	Heat Sink	Transistor, TO-5	5-3	CS
214-0498-00	Heat Sink	Transistor, TO-18	5-2	CR
214-0504-00	Insulator	Ceramic Washer	5-50	CR
214-0559-01	Heat Sink	Transistor, TO-3	5-3	OB
214-0559-02	Heat Sink	Transistor, TO-3	5-3	CS
214-0653-00	Heat Sink	Transistor, TO-18	5-3	CS
214-0667-00	Heat Sink	Transistor, TO-18	5-2	CR
214-0668-00	Heat Sink	Transistor, TO-5	5-2	CR
214-0693-00	Heat Sink	Transistor, TO-18	5-2	CR
214-0716-00	Insulator		5-28	CR
214-0719-00	Insulator		5-28	CS
214-0751-00	Insulation	Fuse Clips	5-43	CR
214-0757-00	Heat Sink	Transistor, TO-5	5-2	CR
214-0761-00	Heat Sink	Transistor, TO-5	5-2	CS
214-0769-00	Insulator	Plate	5-44	CR
214-0781-00	Insulator	Circuit Board Mount	5-41	CR
214-0781-01	Insulator	Circuit Board Mount	5-41	CR
214-0791-00	Insulator	Washer	5-29	CR
214-0798-00	Heat Sink	Transistor, Heat Stab., TO-5 (2)	5-5	CS
214-0817-00	Insulator	Transistor, TO-5	5-46	CR
214-0818-00	Heat Sink	Transistor, Heat Stab., TO-18 (2)	5-5	CS
214-0857-00	Insulator	Slide Contact	5-44	CR
214-0890-00	Insulator	Readout	5-43	CR
214-0946-00	Insulator	Plate	5-46	CR
214-0950-00	Insulator		5-28	CR
214-0971-00	Insulator	Washer	5-29	CR
214-0973-00	Heat Sink	Transistor, Heat Stab., TO-92	5-5	CR
214-1008-00	Insulator	Bushing	5-29	CR
214-1012-00	Heat Sink	Electrical	5-22	CR
214-1060-00	Insulator	Insulator	5-37	CR
214-1108-00	Insulator	Slide Switch	5-31	CR
214-1116-00	Heat Sink	Readout	5-22	CR
214-1117-00	Heat Sink	Readout	5-22	CR
214-1121-00	Heat Sink	Transistor, TO-5	5-3	CR
214-1130-00	Heat Sink	Transistor, TO-3 (2); TO-66 (2)	5-10	CR
214-1137-00	Insulator	Spacer	5-39	CR
214-1138-00	Heat Sink	Transistor	5-49	CR
214-1147-00	Heat Sink	Lamp	5-22	CR
214-1199-00	Heat Sink	Transistor, TO-66	5-5	CS
214-1208-00	Heat Sink	Transistor, TO-5	5-2	CR
214-1213-00	Insulator	Transistor, TO-3	5-40	CS
214-1228-00	Heat Sink	Readout	5-22	CR
214-1254-00	Heat Sink	Transistor, TO-5	5-2	CR
214-1291-00	Heat Sink	Transistor, TO-5	5-2	CR
214-1292-00	Heat Sink	Transistor, TO-5	5-2	CR
214-1300-00	Heat Sink	Transistor, TO-5	5-2	CS
214-1388-00	Heat Sink	Transistor	5-7	CR
214-1459-00	Heat Sink	Transistor, TO-3	5-3	OB
214-1460-00	Heat Sink	Transistor, TO-3	5-3	CS
214-1497-00	Heat Sink	Transistor, TO-8	5-2	CS
214-1504-00	Heat Sink	Transistor, TO-66	5-5	CS
214-1519-00	Heat Sink	Transistor, TO-5	5-16	CS
214-1525-00	Heat Sink	Diode	5-20	CR
214-1536-00	Heat Sink	Transistor, TO-3	5-7	CR
214-1550-00	Heat Sink	Transistor, TO-3 (2)	5-7	CR
214-1557-00	Heat Sink	Transistor, TO-3 (4)	5-7	CS
214-1557-01	Heat Sink	Transistor, TO-3	5-26	CR
214-1580-00	Heat Sink	Transistor, Heat Stab., TO-5 (2)	5-5	CS
214-1581-00	Insulator	Transistor, TO-3	5-49	CR
214-1598-00	Heat Sink	Transistor, TO-3 (2)	5-7	CR
214-1599-00	Heat Sink	Transistor, TO-3 (2)	5-8	CR
214-1610-00	Insulator	Transistor, TO-3	5-49	CR
214-1611-00	Heat Sink	Transistor, TO-5	5-2	CR
214-1612-01	Heat Sink	Transistor, TO-5	5-19	CR
214-1614-00	Heat Sink	Spacer	5-22	CR
214-1622-01	Heat Sink		5-22	CR
214-1623-01	Heat Sink	Power Supply	5-13	CR
214-1624-00	Heat Sink	Transistor, TO-3 (2)	5-21	CR
214-1649-00	Heat Sink	Transistor, TO-66 (5)	5-8	CS
214-1649-02	Heat Sink	Transistor, TO-66 (5)	5-8	CR
214-1651-01	Heat Sink	Transistor, TO-8	5-5	CR
214-1652-00	Heat Sink	Circuit Board	5-26	CR
214-1653-00	Heat Sink	Microcircuit	5-27	CR
214-1666-00	Heat Sink	Transistor, TO-3 (4)	5-12	CR
214-1671-00	Heat Sink	Transistor	5-16	CS
214-1692-00	Heat Sink	Transistor, TO-220	5-4	CR
214-1692-01	Heat Sink	Transistor, TO-220	5-4	CR
214-1713-00	Heat Sink	Transistor, TO-3	5-9	CR
214-1713-01	Heat Sink	Transistor, TO-3	5-9	CR

§§ FOR STATUS CODES, SEE PAGE 5-55.

CROSS REFERENCE INDEX (CONT)

HEAT SINKS AND INSULATORS

5

PART NUMBER	TYPE	DESCRIPTION	PAGE NO.	§§ ST
214-1729-00	Heat Sink		5-25	CR
214-1731-00	Heat Sink	Transistor	5-16	CR
214-1731-01	Heat Sink	Transistor	5-16	CR
214-1757-00	Heat Sink	Microcircuit	5-22	CR
214-1759-00	Heat Sink	Diode		OT
214-1764-00	Heat Sink	Transistor	5-23	CR
214-1766-00	Heat Sink	Transistor, TO-3 (4)	5-12	CR
214-1781-00	Heat Sink	Transistor, TO-3 (4)	5-12	CR
214-1789-01	Heat Sink	Transistor	5-23	CR
214-1791-00	Heat Sink	Transistor	5-23	CR
214-1795-00	Heat Sink	Transistor, TO-66 (4)	5-8	CR
214-1799-00	Heat Sink	Transistor, TO-8	5-2	CR
214-1804-00	Heat Sink	Rectifier	5-20	CR
214-1813-00	Heat Sink	Transistor, TO-8	5-2	CR
214-1815-00	Heat Sink	Transistor, TO-202	5-6	PP
214-1845-00	Heat Sink	Transistor		NP
214-1845-01	Heat Sink	Transistor	5-16	CR
214-1860-00	Heat Sink	Transistor, TO-3 (2)	5-8	CR
214-1867-00	Heat Sink	Transistor	5-23	CR
214-1871-00	Heat Sink	Transistor, TO-3 (2)	5-21	CR
214-1872-00	Heat Sink	Diode	5-20	CS
214-1873-00	Heat Sink	Diode	5-20	
214-1880-00	Heat Sink	Transistor, TO-66 (2)	5-9	CR
214-1882-00	Heat Sink	Transistor	5-16	CR
214-1914-00	Heat Sink	Transistor, TO-220	5-4	CR
214-1916-00	Heat Sink	Transistor, TO-92 (2)	5-5	CR
214-1917-00	Heat Sink	Transistor	5-20	CR
214-1956-00	Heat Sink	Transistor, TO-3 (4)	5-12	CR
214-1958-00	Heat Sink	Power Supply	5-12	CR
214-1967-00	Heat Sink	Transistor, TO-220	5-4	CR
214-1979-00	Heat Sink	Transistor	5-18	CR
214-1990-00	Heat Sink	Microcircuit	5-14	CR
214-1999-01	Heat Sink	Transistor	5-9	CR
214-2007-00	Heat Sink	Transistor	5-18	CS
214-2013-00	Heat Sink	Diode	5-19	CR
214-2045-00	Heat Sink	Transistor	5-25	CR
214-2049-01	Heat Sink	Transistor, TO-3 (6)	5-12	CR
214-2132-00	Heat Sink	Transistor	5-17	CR
214-2213-00	Heat Sink	Transistor, TO-3		OB
214-2215-00	Heat Sink	Transistor	5-16	CR
214-2224-00	Heat Sink	Transistor, TO-3	5-7	CS
214-2225-00	Heat Sink	Transistor, TO-3 (3); TO-66 (1)	5-10	CS
214-2247-00	Heat Sink	Power Supply	5-13	CR
214-2250-00	Insulator		5-31	CR
214-2276-00	Heat Sink	Transistor	5-10	CR
214-2280-00	Heat Sink	Transistor	5-8	CR
214-2299-00	Heat Sink	Power Supply		NP
214-2301-00	Heat Sink	Transformer	5-21	CR
214-2322-00	Heat Sink	Diode	5-15	CS
214-2330-00	Heat Sink	Transistor	5-9	CR
214-2342-00	Heat Sink	Microcircuit	5-15	CR
214-2343-00	Heat Sink	Power Supply	5-19	CR
214-2344-00	Heat Sink	Power Supply	5-19	CR
214-2348-00	Heat Sink	Power Supply	5-12	CS
214-2366-00	Heat Sink	Transistor	5-22	CR
214-2403-00	Heat Sink	Transistor, TO-127	5-18	CR
214-2407-00	Heat Sink	Transistor	5-20	CR
214-2416-00	Heat Sink	Microcircuit	5-15	CR
214-2418-00	Heat Sink	Transistor, Power	5-3	CR
214-2454-00	Heat Sink	Circuit Board	5-22	CR
214-2458-00	Heat Sink	Transistor	5-3	CR
214-2459-00	Heat Sink	Transistor	5-3	CR
214-2462-00	Heat Sink	Transistor	5-18	CR
214-2465-00	Heat Sink	Transistor, TO-220	5-23	CR
214-2473-00	Heat Sink	Transistor, TO-5	5-2	CR
214-2474-00	Heat Sink	Transistor	5-14	CS
214-2493-00	Heat Sink	Power Supply	5-21	CS
214-2495-00	Heat Sink	Circuit Board	5-21	CR
214-2496-00	Heat Sink	Transistor, TO-8	5-4	CR
214-2508-00	Heat Sink	Circuit Board	5-11	CR
214-2508-01	Heat Sink	Circuit Board	5-11	CR
214-2509-00	Heat Sink	Power Supply	5-11	CR
214-2515-00	Heat Sink	Power Supply		OT
214-2516-00	Heat Sink	Transistor, TO-220 (2)	5-11	CR
214-2518-00	Heat Sink	Transistor, TO-220	5-4	CR
214-2518-01	Heat Sink	Transistor, TO-220	5-4	CR
214-2539-00	Heat Sink	Transistor, TO-3 (2); TO-127 (1)	5-23	CS
214-2540-02	Heat Sink	Power Supply	5-12	CR
214-2543-00	Heat Sink	Microcircuit	5-24	CR
214-2549-00	Heat Sink	Transistor & Diode	5-19	CR
214-2569-00	Heat Sink	Transistor, TO-5	5-2	CR
214-2572-00	Heat Sink	Transistor, TO-39	5-19	CS
214-2592-00	Heat Sink	Circuit Board	5-20	CR
214-2593-00	Heat Sink	Transistor, TO-5	5-2	CR
214-2597-00	Heat Sink	Resistor	5-21	CR
214-2611-00	Heat Sink	Power Supply	5-13	CS
214-2611-01	Heat Sink	Power Supply	5-13	CR
214-2611-02	Heat Sink	Power Supply	5-11	CR
214-2612-00	Heat Sink	Circuit Board	5-11	CR
214-2613-00	Heat Sink	Transistor, TO-3	5-4	CS
214-2613-01	Heat Sink	Transistor, TO-3	5-4	CR
214-2622-00	Heat Sink	Transistor, TO-220 (3)		CS
214-2635-00	Heat Sink	Transistor, TO-220 (2)		CS
214-2636-00	Heat Sink	Power Supply	5-21	CR
214-2702-00	Heat Sink	Ceramic Rod	5-50	CR
214-2712-00	Heat Sink	Circuit Board	5-16	CR
214-2731-00	Heat Sink	Diode, TO-3	5-15	CR
214-2733-00	Heat Sink	Transistor, TO-202 (2)	5-20	CS
214-2744-00	Heat Sink	Transistor, TO-202	5-19	CR
214-2746-00	Heat Sink	Transistor, TO-39	5-5	CR
214-2766-00	Heat Sink	Power Supply		OT
214-2769-00	Heat Sink	Oscillator	5-22	CR
214-2770-00	Heat Sink	Diode, DO-4 (2)	5-16	CR
214-2777-00	Heat Sink	Circuit Board, TO-3 (4)	5-9	CR
214-2778-00	Heat Sink	Circuit Board	5-10	CR
214-2788-00	Heat Sink	Power Supply	5-13	CR
214-2789-00	Heat Sink	Power Supply	5-13	CR
214-2796-00	Heat Sink	Transistor	5-13	CR
214-2801-00	Heat Sink	Circuit Board	5-11	CR
214-2811-00	Heat Sink	Transistor, TO-220	5-4	CR
214-2815-00	Heat Sink	Power Supply	5-12	CR
214-2823-00	Heat Sink	Switch	5-18	CR
214-2824-00	Heat Sink	Electrical	5-17	CR
214-2837-00	Heat Sink	Transistor	5-26	CR
214-2857-00	Heat Sink	Diode, TO-220 (2)	5-25	CR
214-2863-00	Heat Sink	Transistor, TO-220	5-18	CR
214-2867-00	Heat Sink	Transistor, TO-202 (2)	5-4	CR
214-2868-00	Heat Sink	IC, 14 or 16 Pin Dip	5-10	CR
214-2874-00	Heat Sink	Transistor, TO-220 (5)	5-9	CR
214-2882-00	Heat Sink	Transistor, TO-220	5-18	CR
214-2888-00	Heat Sink	Transistor, TO-3	5-10	CR
214-2890-00	Heat Sink	Power Supply	5-11	CR
214-2913-00	Heat Sink	Electrical	5-17	CR
214-2928-00	Heat Sink	Power Supply	5-26	CR
214-2932-00	Heat Sink	Power Supply	5-13	CR
214-2944-00	Heat Sink	Transistor	5-5	CR
214-2947-00	Heat Sink	Transistor, TO-220	5-18	CR
214-2948-00	Heat Sink	Transistor, TO-220	5-5	CR
214-2951-00	Heat Sink	Diode	5-15	CR
214-2953-00	Heat Sink	TO-220	5-3	CR
214-2954-00	Heat Sink	Transistor, TO-3	5-4	PP
214-2955-00	Heat Sink	Transistor, TO-220	5-3	CR
214-2956-00	Heat Sink	Transistor, TO-220	5-3	CR
214-2957-00	Heat Sink	Transistor, TO-220	5-3	CR
214-2972-00	Heat Sink	Transistor, TO-61	5-25	CR
214-2972-01	Heat Sink	Transistor, TO-61	5-25	CR
214-2980-00	Heat Sink	Transistor, TO-220	5-16	CR
214-2988-00	Heat Sink	Transistor, TO-202	5-18	CR
214-2991-00	Heat Sink	Transistor, TO-220	5-22	
214-2993-00	Heat Sink	Transistor, TO-220	5-22	CR
214-2995-00	Heat Sink	Transistor, TO-202 (2)	5-16	CR
214-3000-00	Heat Sink		5-14	CR
214-3000-01	Heat Sink		5-14	CR
214-3001-01	Heat Sink		5-14	CR
214-3002-00	Heat Sink		5-14	CR
214-3002-01	Heat Sink		5-14	CR
214-3003-00	Heat Sink		5-14	CR
214-3003-01	Heat Sink		5-14	CR
214-3004-00	Heat Sink		5-14	CR
214-3004-01	Heat Sink		5-14	CR

CROSS REFERENCE INDEX (CONT)

HEAT SINKS AND INSULATORS

PART NUMBER	TYPE	DESCRIPTION	PAGE NO.	§§ ST
214-3011-00	Heat Sink	Transistor, TO-202	5-18	CR
214-3015-00	Heat Sink	Transistor, TO-202	5-16	CR
214-3022-01	Heat Sink	Power Supply	5-14	CR
214-3036-00	Heat Sink	Transistor, TO-220	5-6	CR
214-3037-01	Heat Sink	Power Supply	5-14	CR
214-3052-00	Heat Sink	Transistor	5-14	CR
214-3057-00	Heat Sink	Transistor, TO-92	5-4	CR
214-3058-00	Heat Sink	Oscillator	5-22	CR
214-3069-01	Heat Sink	Resistor Assembly	5-17	CR
214-3070-00	Heat Sink	Transistor	5-26	CR
214-3087-00	Heat Sink	Transistor	5-17	CR
214-3094-00	Heat Sink	Diode	5-16	CR
214-3109-00	Heat Sink	Power Supply	5-12	CR
214-3126-00	Heat Sink	Transistor	5-14	CR
214-3136-00	Heat Sink	Transistor, TO-5	5-2	CR
214-3140-00	Heat Sink	Transistor, TO-3	5-26	CR
214-3144-00	Heat Sink	Circuit Board	5-24	CR
214-3153-00	Heat Sink	Circuit Board	5-24	CR
214-3174-00	Heat Sink	Transistor, TO-220	5-22	CR
214-3175-00	Heat Sink	Transistor, TO-220	5-25	CR
214-3178-00	Heat Sink	Transistor, TO-220	5-24	CR
214-3216-00	Heat Sink	Transistor	5-24	CR
214-3231-00	Heat Sink	Diode	5-24	CR
214-3238-00	Heat Sink	Microcircuit	5-15	CM
214-3243-00	Heat Sink	Transistor, TO-220	5-24	CR
214-3244-00	Heat Sink	Diode	5-24	CR
214-3257-00	Heat Sink	Diode	5-24	CR
214-3258-00	Heat Sink	Transistor, TO-220	5-3	CR
214-3269-00	Heat Sink	Diode	5-24	CR
214-3291-00	Heat Sink	Power Supply	5-11	CR
214-3300-00	Heat Sink	Transistor, TO-220	5-27	CR
214-3302-00	Heat Sink	Diode	5-24	CR
214-3309-00	Heat Sink	Transistor, Power	5-3	CR
214-3313-00	Heat Sink	Transistor, TO-220	5-19	CR
214-3315-00	Heat Sink	Transistor	5-15	CR
214-3334-00	Heat Sink	Microcircuit	5-15	PP
214-3414-00	Heat Sink	Transistor, TO-92 & TO-18	5-2	CR
214-3429-00	Heat Sink	Transistor, TO-220	5-6	PP
214-3438-00	Heat Sink	Transistor	5-3	PP
214-3439-00	Heat Sink	Transistor	5-3	PP
276-0021-00	Insulator	Ceramic Rod	5-50	CR
276-0075-00	Insulator	Ceramic Rod	5-50	CS
281-0673-00	Insulator	Ceramic Tube	5-50	CR
307-0210-02	Insulator		5-48	CR
337-0419-00	Insulator	Ceramic Washer	5-50	CR
337-0985-00	Insulator	Ceramic Washer	5-40	CR
342-0015-00	Insulator	Connector	5-30	CR
342-0026-00	Insulator	Transistor	5-43	CR
342-0034-00	Insulator	Bushing	5-28	CR
342-0039-00	Insulator	Plate	5-31	CS
342-0040-01	Insulator	Plate	5-34	CS
342-0041-00	Insulator	Pad	5-31	CS
342-0044-00	Insulator	Washer	5-29	CR
342-0049-00	Insulator	Variable Resistor	5-28	CR
342-0050-00	Insulator	Terminal Pin	5-28	CR
342-0051-00	Insulator	Plate	5-40	CS
342-0073-00	Insulator	Elec. Shield	5-30	CR
342-0075-00	Insulator	Washer	5-41	CS
342-0082-00	Insulator		5-48	CR
342-0084-00	Insulator	Plate	5-33	OT
342-0085-00	Insulator	Plate	5-31	OT
342-0094-00	Insulator	Plate	5-30	CR
342-0095-00	Insulator	Shield	5-30	CR
342-0096-00	Insulator	Push Switch	5-32	CR
342-0097-00	Insulator	Connector	5-38	CR
342-0101-00	Insulator	Sleeve	5-28	CR
342-0104-00	Insulator	Power Supply	5-31	CR
342-0106-00	Insulator	Plate	5-31	CS
342-0107-00	Insulator	Bushing	5-28	CS
342-0109-00	Insulator	Circuit Board	5-32	CS
342-0117-00	Insulator	Bushing	5-28	CR
342-0122-00	Insulator	Sleeve	5-28	CR
342-0123-00	Insulator	Sleeve	5-28	CR
342-0126-00	Insulator	Mounting Frame	5-50	CR
342-0127-00	Insulator	Power Supply	5-30	CR
342-0128-00	Insulator	HV Power	5-32	CR
342-0129-00	Insulator	HV Power	5-32	CR
342-0131-00	Insulator	Plate	5-30	CR
342-0132-00	Insulator	Circuit Board	5-38	CS
342-0132-01	Insulator	Circuit Board	5-38	CR
342-0136-00	Insulator	Washer	5-29	CR
342-0137-00	Insulator	Washer	5-28	CR
342-0147-00	Insulator	Bushing	5-28	CR
342-0160-00	Insulator	Bushing	5-28	CR
342-0163-00	Insulator	Transistor	5-29	CR
342-0164-00	Insulator	HV Film	5-34	CR
342-0166-00	Insulator	Transistor	5-29	CR
342-0167-00	Insulator	Circuit Board	5-34	CR
342-0168-00	Insulator	Sleeve	5-28	CR
342-0170-00	Insulator	Sleeve	5-28	CR
342-0171-00	Insulator	Bushing	5-28	CR
342-0172-00	Insulator	Transformer	5-28	CR
342-0175-00	Insulator	HV Plate	5-34	CR
342-0176-00	Insulator		5-39	CR
342-0176-01	Insulator		5-39	CR
342-0182-00	Insulator	Plate	5-30	CR
342-0183-00	Insulator	Plate, Shield	5-35	CR
342-0184-00	Insulator	CRT	5-30	CR
342-0188-00	Insulator	Line Connector	5-42	CR
342-0191-00	Insulator	Battery Pack	5-35	CR
342-0192-00	Insulator	Battery Pack	5-35	CR
342-0193-00	Insulator	Power Supply	5-31	CR
342-0194-00	Insulator	Transistor	5-31	CR
342-0195-00	Insulator	Transistor	5-31	CR
342-0196-00	Insulator	Push Switch	5-30	CR
342-0199-00	Insulator	Side Panel	5-32	CR
342-0200-00	Insulator	Circuit Board	5-33	CR
342-0201-00	Insulator	Plate, Bus Bar	5-31	CR
342-0202-00	Insulator	Transistor	5-29	CR
342-0203-00	Insulator	Transistor	5-33	CR
342-0205-00	Insulator	Circuit Board	5-34	CR
342-0209-00	Insulator	Transistor	5-29	CR
342-0210-00	Insulator	Power Supply	5-42	CR
342-0211-02	Insulator		5-48	
342-0212-00	Insulator	Circuit Board	5-30	CR
342-0213-01	Insulator	Power Supply	5-30	CR
342-0214-00	Insulator	Transistor	5-31	CR
342-0215-00	Insulator	Display	5-31	CS
342-0216-00	Insulator	Fuse Block	5-39	PP
342-0217-00	Insulator	Processor	5-46	CR
342-0218-00	Insulator	Processor	5-46	CR
342-0224-00	Insulator	Transistor	5-29	CR
342-0225-00	Insulator	Circuit Board	5-42	CR
342-0226-00	Insulator	Plate	5-30	CR
342-0227-00	Insulator	Push Switch	5-32	CR
342-0228-00	Insulator	Power Supply	5-31	CR
342-0229-00	Insulator	Power Supply	5-31	CR
342-0233-00	Insulator	Transistor	5-31	CS
342-0234-00	Insulator	Transistor	5-31	CS
342-0236-00	Insulator	Circuit Board	5-30	CR
342-0238-00	Insulator	Power Supply	5-36	CR
342-0239-00	Insulator	Circuit Board	5-36	CR
342-0240-00	Insulator	Circuit Board	5-33	CR
342-0242-00	Insulator	Variable Resistor	5-34	CR
342-0245-00	Insulator	HV Leads	5-40	CR
342-0246-00	Insulator	Shield	5-33	CS
342-0248-00	Insulator	HV Chassis	5-32	CR
342-0249-00	Insulator	HV Shield	5-30	CR
342-0250-00	Insulator	Switch	5-40	CS
342-0253-00	Insulator	Sleeve	5-28	CR
342-0254-00	Insulator	Disk	5-31	CR
342-0256-00	Insulator	HV Transformer	5-32	CR
342-0257-00	Insulator	HV Lead	5-31	CS
342-0259-00	Insulator	Shield	5-46	CR
342-0262-00	Insulator	Bushing	5-41	CR
342-0263-00	Insulator	Variable Resistor	5-28	CR
342-0264-00	Insulator	HV Shield	5-30	CR
342-0265-00	Insulator	Washer	5-29	CR
342-0266-00	Insulator	Shield	5-31	CR
342-0267-00	Insulator	Transistor	5-43	CR

§§ FOR STATUS CODES, SEE PAGE 5-55.

CROSS REFERENCE INDEX (CONT)

HEAT SINKS AND INSULATORS

5

PART NUMBER	TYPE	DESCRIPTION	PAGE NO.	§§ ST
342-0268-00	Insulator	Transformer	5-42	CR
342-0269-00	Insulator	Circuit Board	5-30	CR
342-0270-00	Insulator	Circuit Board	5-30	CR
342-0271-00	Insulator	Shield	5-30	CR
342-0272-00	Insulator	CRT Shield	5-30	CR
342-0273-00	Insulator	Bushing	5-28	PP
342-0275-00	Insulator	High Voltage	5-44	CR
342-0281-00	Insulator	Circuit Board	5-30	OT
342-0283-00	Insulator	Oven	5-30	CR
342-0285-00	Insulator	Oven	5-30	CR
342-0289-00	Insulator	Variable Resistor	5-31	CS
342-0290-00	Insulator	Power Plug	5-33	CR
342-0293-00	Insulator	HV Plate	5-32	CR
342-0294-00	Insulator	Circuit Board	5-33	CR
342-0297-00	Insulator	HV Power Supply	5-32	CR
342-0298-00	Insulator	Bushing	5-28	CR
342-0304-00	Insulator	Bushing	5-28	CR
342-0308-00	Insulator	Film	5-30	CR
342-0309-00	Insulator	Film	5-32	CR
342-0310-00	Insulator	Film	5-32	CR
342-0311-00	Insulator	Transistor	5-33	CR
342-0312-00	Insulator	Circuit Board		OT
342-0315-00	Insulator	Circuit Board	5-30	CR
342-0316-00	Insulator	Circuit Board	5-30	CR
342-0317-00	Insulator	Battery	5-32	CR
342-0318-00	Insulator	Sleeve	5-28	CR
342-0320-00	Insulator	Power Supply	5-40	CR
342-0321-00	Insulator	Shield	5-29	CR
342-0322-00	Insulator	Transistor	5-29	CR
342-0324-00	Insulator	Disc, Transistor	5-28	CR
342-0326-00	Insulator	Film	5-32	CR
342-0327-00	Insulator	Film	5-30	CR
342-0328-00	Insulator	Transistor	5-48	CR
342-0329-00	Insulator	HV Shield	5-30	CR
342-0330-00	Insulator	HV Shield	5-32	CR
342-0341-00	Insulator	HV Shield	5-32	CR
342-0343-00	Insulator	Bushing	5-28	CR
342-0345-00	Insulator	Battery Pack	5-31	CS
342-0350-00	Insulator	Circuit Board	5-30	CR
342-0351-00	Insulator	Circuit Board	5-31	CR
342-0352-00	Insulator	Washer		DL
342-0353-00	Insulator	Plate, Transistor		DL
342-0354-00	Insulator	Transistor	5-29	CR
342-0354-01	Insulator	Transistor	5-29	PP
342-0355-00	Insulator	Transistor	5-29	CR
342-0356-00	Insulator	Plate, Microcircuit	5-28	CR
342-0357-00	Insulator	Plate, Transistor	5-30	EN
342-0358-00	Insulator	Washer	5-29	EN
342-0360-00	Insulator	Battery Pack	5-38	CS
342-0361-00	Insulator	Battery Pack	5-30	OT
342-0362-00	Insulator	Plate	5-31	OT
342-0363-00	Insulator	Transistor	5-29	CR
342-0364-00	Insulator	Transistor	5-30	CR
342-0365-00	Insulator	Transistor	5-30	CR
342-0368-00	Insulator	Shield	5-30	CR
342-0369-00	Insulator	Power Supply	5-36	CS
342-0370-00	Insulator	Transistor	5-30	CR
342-0373-00	Insulator	Plate	5-40	CR
342-0374-00	Insulator	Plate	5-40	CR
342-0376-00	Insulator	Connector	5-28	CR
342-0377-00	Insulator	Oscillator	5-36	CR
342-0380-00	Insulator	Washer	5-29	CR
342-0381-00	Insulator	Bushing	5-28	CR
342-0382-00	Insulator	Transistor		NP
342-0383-00	Insulator	Shield	5-30	CR
342-0384-00	Insulator	High Voltage	5-39	CR
342-0385-00	Insulator	Washer	5-29	CR
342-0386-00	Insulator	Bushing	5-28	CR
342-0389-00	Insulator	Transistor	5-40	CR
342-0390-00	Insulator	Circuit Board	5-30	CR
342-0391-00	Insulator	Circuit Board	5-30	CR
342-0392-00	Insulator	Circuit Board	5-30	CR
342-0393-00	Insulator	Circuit Board	5-36	CR
342-0394-00	Insulator	Circuit Board	5-36	CR
342-0395-00	Insulator	Attenuator	5-37	CR

PART NUMBER	TYPE	DESCRIPTION	PAGE NO.	§§ ST
342-0397-00	Insulator	Shield	5-39	CR
342-0400-00	Insulator	Circuit Board	5-36	CS
342-0401-00	Insulator	Circuit Board	5-31	CR
342-0402-00	Insulator	High Voltage	5-34	CR
342-0403-00	Insulator	HV Shield	5-30	CR
342-0405-00	Insulator	Cables	5-37	CR
342-0408-00	Insulator	Sleeve	5-28	CR
342-0409-00	Insulator	Plate, Comp.	5-37	CR
342-0412-00	Insulator	Circuit Board	5-33	CR
342-0413-00	Insulator	Circuit Board	5-38	CR
342-0414-00	Insulator	Power Switch	5-35	CR
342-0415-00	Insulator	Filter	5-30	CR
342-0417-00	Insulator	Transformer	5-46	CR
342-0419-00	Insulator	Capacitor	5-40	CR
342-0420-00	Insulator	Transistor	5-48	CR
342-0421-00	Insulator	Bushing	5-28	CR
342-0422-00	Insulator	Circuit Board	5-31	CR
342-0424-00	Insulator		5-31	CR
342-0425-00	Insulator	Transistor	5-30	CR
342-0426-00	Insulator		5-31	CR
342-0431-00	Insulator	Transistor	5-38	CR
342-0439-00	Insulator	Circuit Board	5-30	CR
342-0442-00	Insulator	Wire	5-39	CR
342-0443-00	Insulator	Hinge	5-40	CR
342-0444-00	Insulator	Handle, Sw.	5-41	CR
342-0447-00	Insulator	Washer	5-30	CR
342-0449-00	Insulator	Transistor	5-48	CR
342-0449-01	Insulator	Transistor	5-49	CR
342-0450-00	Insulator	Transistor	5-31	CR
342-0451-00	Insulator	Transistor	5-29	CR
342-0452-00	Insulator	Circuit Board	5-37	CR
342-0453-00	Insulator	Circuit Board	5-37	CS
342-0455-00	Insulator	High Voltage	5-30	CR
342-0456-00	Insulator	Washer	5-29	CR
342-0457-00	Insulator	Transistor	5-30	CR
342-0458-00	Insulator	Transistor	5-38	CR
342-0460-00	Insulator	Power Switch	5-34	CR
342-0461-00	Insulator	Coil	5-48	CR
342-0462-00	Insulator	Contact	5-29	CR
342-0463-00	Insulator	Contact	5-28	CR
342-0464-00	Insulator		5-31	CR
342-0466-00	Insulator	Shield		NP
342-0466-01	Insulator	Microcircuit	5-32	CR
342-0470-00	Insulator	Connector	5-30	CR
342-0472-00	Insulator	Disc, Transistor		DL
342-0473-00	Insulator	Disc, Microcircuit		DL
342-0474-00	Insulator	Feedthru, Half	5-28	CR
342-0476-00	Insulator	Transistor	5-33	CR
342-0477-00	Insulator			NP
342-0478-00	Insulator	Terminal	5-35	CR
342-0480-00	Insulator	Battery Set	5-35	CR
342-0481-00	Insulator	Switch	5-38	CR
342-0483-00	Insulator	Transistor	5-33	CR
342-0484-00	Insulator		5-43	CR
342-0485-00	Insulator		5-31	CR
342-0486-00	Insulator	Circuit Board	5-34	CR
342-0488-01	Insulator	Spacer	5-41	CR
342-0489-00	Insulator	Transistor, TO-3	5-44	CR
342-0490-00	Insulator	Shield	5-32	CR
342-0491-00	Insulator	Plate	5-44	CR
342-0492-00	Insulator	Bracket	5-45	CR
342-0493-00	Insulator	Bushing	5-41	CR
342-0494-00	Insulator	Transistor	5-31	CR
342-0495-00	Insulator	Transistor	5-31	CR
342-0497-00	Insulator	Circuit Board	5-35	CR
342-0498-00	Insulator	Washer	5-29	CR
342-0499-00	Insulator	Sleeve	5-41	CR
342-0499-01	Insulator		5-49	
342-0505-00	Insulator	Plate	5-45	CR
342-0506-00	Insulator	Circuit Board	5-44	CR
342-0507-00	Inuslator	Plate	5-30	CR
342-0509-00	Insulator		5-33	CR
342-0510-00	Insulator		5-41	CR
342-0511-00	Insulator	Circuit Board	5-31	CR
342-0513-01	Insulator	Circuit Board	5-32	CR

CROSS REFERENCE INDEX (CONT)

HEAT SINKS AND INSULATORS

PART NUMBER	TYPE	DESCRIPTION	PAGE NO.	§§ ST
342-0516-00	Insulator		5-30	CR
342-0517-00	Insulator	Washer	5-29	CR
342-0518-00	Insulator	Circuit Board	5-33	CR
342-0519-00	Insulator	Circuit Board	5-33	CR
342-0523-00	Insulator	Plate, Transistor	5-30	CR
342-0524-00	Insulator	Bushing	5-41	CR
342-0533-00	Insulator		5-33	CR
342-0534-00	Insulator	Circuit Board	5-39	CR
342-0535-00	Insulator	Plate	5-41	CR
342-0536-00	Insulator	Transistor	5-43	CR
342-0537-00	Insulator	Plate	5-34	CR
342-0539-00	Insulator	Cable	5-44	CR
342-0540-00	Insulator	Shield	5-33	CR
342-0541-00	Insulator	Header	5-40	CR
342-0542-00	Insulator		5-43	CR
342-0546-00	Insulator		5-48	CR
342-0548-00	Insulator	Transistor	5-31	PP
342-0549-00	Insulator	Plate	5-31	CR
342-0555-00	Insulator		5-49	CR
342-0556-00	Insulator		5-30	CR
342-0559-00	Insulator	Plate	5-45	CR
342-0560-00	Insulator		5-30	DL
342-0562-00	Insulator		5-31	CR
342-0563-00	Insulator	Transistor	5-29	CR
342-0564-00	Insulator	Plate	5-44	CR
342-0565-00	Insulator	Contact	5-43	CR
342-0566-00	Insulator		5-31	CR
342-0568-00	Insulator	Contact	5-43	CR
342-0569-00	Insulator		5-31	PP
342-0571-00	Insulator	Plate	5-31	CR
342-0573-00	Insulator	Shield	5-31	CR
342-0575-00	Insulator	Plate	5-41	CR
342-0577-00	Insulator	Sleeve	5-28	CR
342-0578-00	Insulator		5-31	CR
342-0582-00	Insulator		5-48	CR
342-0582-01	Insulator		5-48	PP
342-0584-00	Insulator		5-30	CR
342-0586-00	Insulator	Transistor	5-29	CR
342-0587-00	Insulator	Power Switch	5-45	CR
342-0589-00	Insulator		5-30	CR
342-0590-00	Insulator		5-34	CR
342-0595-00	Insulator		5-30	PP
342-0596-00	Insulator	Capacitor	5-45	CR
342-0597-00	Insulator		5-48	CR
342-0601-00	Insulator		5-46	CR
342-0603-00	Insulator		5-46	CR
342-0604-00	Insulator		5-31	CR
342-0608-00	Insulator	Plate	5-44	CR
342-0610-00	Insulator		5-31	CR
342-0615-00	Insulator	Plate	5-45	CR
342-0624-00	Insulator	Transistor	5-33	PP
342-0629-00	Insulator	Transistor	5-30	PP
342-0630-00	Insulator	Transistor	5-29	PP
342-0638-00	Insulator	Transistor	5-45	PP
348-0566-00	Insulator	Pad, Mounting, Transistor, TO-5	5-28	CR
358-0092-00	Insulator	Ceramic Washer	5-50	CR
358-0265-00	Insulator	Ceramic Washer	5-50	CR
361-0116-00	Insulator	Ceramic Washer	5-50	CS
361-0117-00	Insulator	Ceramic Washer	5-50	CS
361-0150-00	Insulator	Ceramic Washer	5-50	OB
361-0174-00	Insulator	Ceramic Washer	5-50	CR
361-0253-00	Insulator	Ceramic Washer	5-50	CR
361-0325-00	Insulator	Ceramic Washer	5-50	CR
361-0335-00	Insulator	Ceramic Tube	5-50	CR
361-0469-00	Insulator	Ceramic Tube	5-50	CR
361-0555-00	Insulator	Ceramic Washer	5-50	CR
361-0555-01	Insulator	Ceramic Washer	5-50	CR
361-0555-02	Insulator	Ceramic Washer	5-50	CR
361-0687-00	Insulator		5-48	CR
361-0818-00	Insulator	Ceramic Washer	5-50	CR
377-0048-00	Insulator	Ceramic Washer	5-50	CR
377-0089-02	Insulator	Ceramic Washer	5-50	CR
377-0150-00	Insulator	Ceramic Washer	5-50	CR
377-0191-01	Insulator	Ceramic Washer	5-50	CR
377-0290-01	Insulator	Ceramic Washer	5-50	CR

PART NUMBER	TYPE	DESCRIPTION	PAGE NO.	§§ ST
381-0225-00	Insulator		5-48	CS
381-0243-00	Insulator		5-48	CS
386-0143-00	Insulator	Plate	5-30	CR
386-0786-00	Insulator	Plate	5-30	CR
386-0978-00	Insulator	Plate	5-30	CR
386-1094-00	Insulator	Plate	5-30	CR
386-2894-00	Insulater	Ceramic Rod	5-50	CR
387-0345-00	Insulator	Plate	5-40	CR

5

§§ STATUS CODES

CR	Current Production
§EN	Engineering
PP	Pre-Prod
§CS	Customer Service
§NP	Non-Prod
§CL	Cancelled
§DL	Deleted
§OB	Obsolete Instrument
CM	Custom Mod Instrument
§DS	Digital Systems
§OT	Obsolescent Instrument
MP	Modified Part
LR	Last Supply Current
LS	Last Supply Customer Service
VN	Vendor
TC	Telequipment Current Prod.
IN	International
SC	Sony/Tek Current Prod.

THE STATUS IN THIS CATALOG WAS CORRECT AT THE TIME IT WAS PUBLISHED, BUT IT IS SUBJECT TO CHANGE.

§ TO USE A PART WITH THIS STATUS ON A NEW INSTRUMENT REQUIRES THAT A NEW PURCHASED PART INITIATION FORM (PPIF) BE INITIATED.

(A GLOSSARY OF TERMS FOR THESE STATUS CODES CAN BE FOUND ON PAGE 0-44.)

HEAT SINKS (CONT)

FIN SPACING AFFECTS HEAT SINK EFFICIENCY

Vertically oriented multi-finned heat sinks are commonly used for removing waste heat from electronic instruments. In selecting a heat sink for use in a natural convection environment, the design engineer must be aware that fin spacing can directly influence the efficiency of the heat sink.

An increase in the number of fins on a heat sink does not necessarily correspond to an increase in the cooling capabilities of the sink. In fact, a reduction in the cooling efficiency of the heat sink can result. Tek's Thermal Analysis group recently examined the effects of two fin spacings for several heat sink heights (see Figure 1).

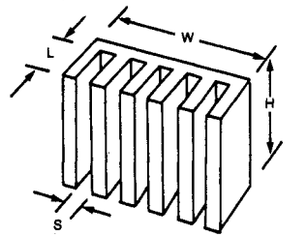

W = Width
H = Height
L = Fin length
S = Fin spacing

FIGURE 1

A reduction in fin spacing (increasing number of fins) increases the area available for heat transfer. However, this increase can be offset by a decrease in the efficiency of natural convection and radiation heat transfer. Choking of airflow through the fins can occur with closely spaced fins. Also, radiation transfer is affected by adjacent fin shielding. For a given fin length, there is an optimum fin spacing that maximizes heat transfer.

TEST RESULTS

Common stock extruded heat sink material was used to calculate theoretical results and conduct the actual tests. The material was 3.8 inches wide, and had thirteen equally spaced fins. A typical fin spacing of 0.23-inch was measured. Removing every other fin increased the typical fin spacing to 0.54-inch. These two spacings were used in conjunction with a fin length of one-inch for testing.

First, theoretical thermal resistances and power dissipations were tabulated. Results showed that in 16 of the 24 cases considered, the heat sink with fin spacing of 0.54-inch would dissipate more power, i.e., would have a lower thermal resistance. For the cases considered here, the implications were obvious. If a design engineer had selected a sink with 0.23-inch spacing, s/he would have chosen a heat sink that provided no additional cooling benefit and had an increased cost and weight.

Next, limited empirical testing was conducted for verification of the theoretical results. Two six-inch samples having fin spacings of 0.23- and 0.54-inch were selected for the testing. Each sample was suspended in a protective shroud to restrict stray room air currents. Several thermocouples were situated on the heat sink to obtain a good average surface temperature. Power dissipation was by six uniformly distributed TO-220 transistor packages. Two surface conditions were considered: bare aluminum (emissivity approximately 0.1), and the sink painted black (emissivity approximately 0.8).

The tests were conducted for temperature rises of approximately 10°C, 25°C and 50°C. The results are plotted in Figures 2 and 3. Good agreement was obtained between actual and theoretical results for the conditions tested. As indicated by theory and supported by experiment, both heat sinks have very similar cooling capabilities.

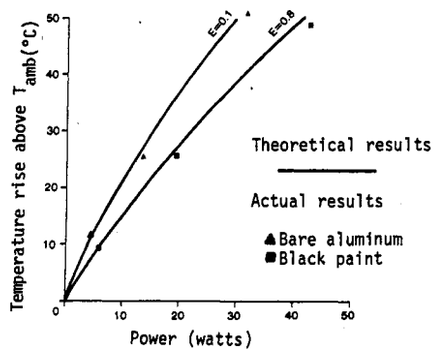

FIGURE 2

COMPARISON OF RESULTS FOR FIN SPACING 0.23 INCH

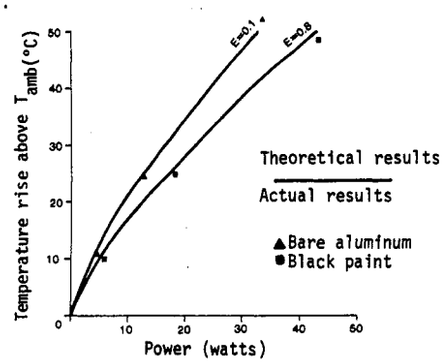

FIGURE 3

COMPARISON OF RESULTS FOR FIN SPACING 0.54 INCH.

From the examples presented here, it is evident that fin spacing should be a major concern when designing or selecting a multi-finned heat sink for use in a natural convection environment.

The Thermal Analysis group is available for design support and consultation for all types of heat sink related problems. Contact Gordon Ellison or Larry Haroun at ext. 7887, or delivery station 50-132.

Bare copper power transistors require attention

Motorola, one of our more important power transistor vendors, has just changed the packaging process and materials for TO-126, TO-127 and TO-220 power transistors. This change affects all TO-126 and TO-127 and most of the TO-220 packaged devices used at Tektronix. This does not apply to three-terminal regulators, SCRs or triacs.

The change is two-fold:

1. The plastic is changed from a silicone compound to an epoxy material, and
2. The headers are changed from gold- or nickel-plated copper to *bare copper only*.

Motorola's rationale for these changes was to dramatically improve the power-cycling ability of their product, and to provide much higher resistance to environmentally-caused internal degradation.

Tek's only reservation concerning this change was the exposed copper on the tab and mounting surface. Copper corrodes when it is in intimate contact with other metals. However, this situation can be greatly minimized by installing common plastic power transistor insulation hardware, assuming the insulator and bushing are not already specified for electrical isolation.

Some typical examples of this installation technique are shown below.

If you have any questions, please contact **Jim Williamson, ext. DR-2552.**

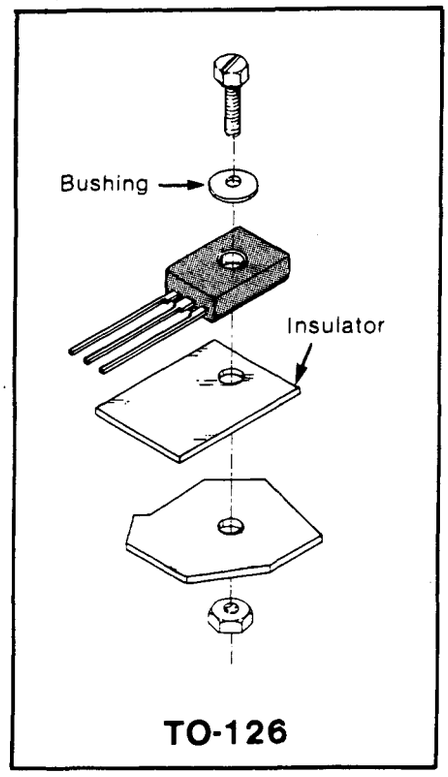

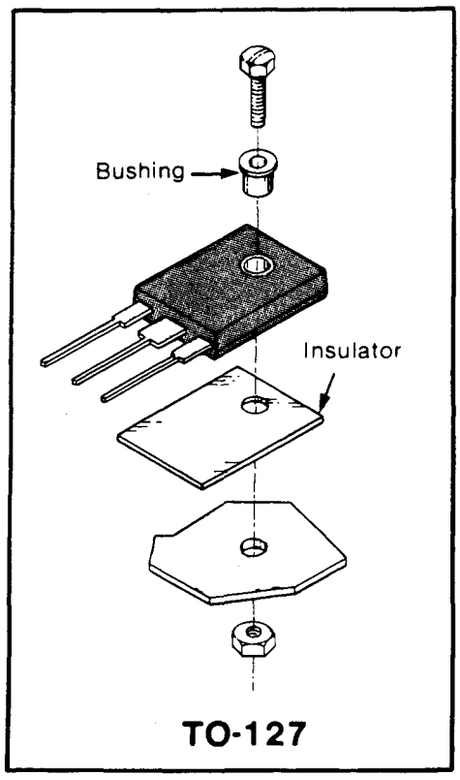

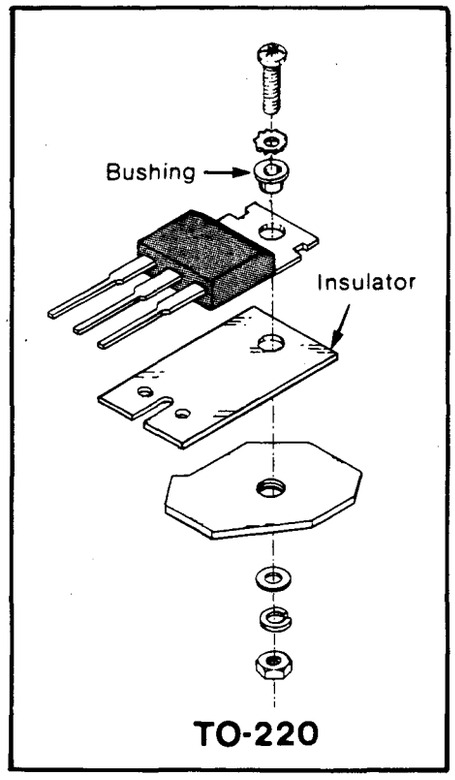

COST CODE
(CC COLUMN)

CODE	A	B	C	D	E	F	G	H	I	J	K	L	M	N	O
≈ VALUE with +	.75¢	2¢	3.75¢	6¢	10¢	18¢	35¢	60¢	$1	$2	$3.75	$6	$10	$18	$35+
≈ VALUE no suffix	.5¢	1.5¢	3¢	5¢	8¢	15¢	25¢	50¢	75¢	$1.50	$3	$5	$8	$15	$25
≈ VALUE with -	.2¢	1.25¢	2.5¢	4.25¢	7¢	13¢	22¢	40¢	65¢	$1.25	$2.50	$4.25	$7	$13	$22

NOTE: Costs may vary from order to order due to order quantities, vendor, etc.

TRANSISTORS

6

TABLE OF CONTENTS

SECTIONS 6 THRU 9

	PAGE(S)
LISTINGS	
ARRAYS	6-23
FIELD EFFECT (SINGLE)	7-2 & 7-5
FIELD EFFECT (DUAL & PAIR)	7-6 THRU 7-8
REFERENCE ONLY LIST (NOT FOR NEW DESIGN)	7-10 & 7-11
POWER, SILICON, NPN & PNP	6-20 & 6-21
REFERENCE ONLY LIST (NOT FOR NEW DESIGN)	6-22
MOUNTING POWER TRANSISTORS	6-0
THYRISTORS	8-0 & 8-1
SMALL SIGNAL (SATURATED SWITCHES)	6-2
SMALL SIGNAL (AMPLIFIER SWITCH)	6-3
SMALL SIGNAL (HIGH BETA)	6-4
SMALL SIGNAL (HIGH SPEED AMPLIFIER)	6-5
SMALL SIGNAL (HIGH VOLTAGE)	6-6
SMALL SIGNAL (VERY HIGH FREQUENCY)	6-7
SMALL SIGNAL (MEDIUM FREQUENCY-LOW BETA)	6-8
SMALL SIGNAL (DARLINGTON)	6-9
SMALL SIGNAL (DUALS)	6-10
SMALL SIGNAL SILICONS IN TOTAL F_T ORDER	6-12 THRU 6-16
REFERENCE ONLY LIST (NOT FOR NEW DESIGN)	6-17 THRU 6-19
SELECTED (TEK)	8-2 THRU 8-20
MATCHED & CHECKED (TEK)	8-21 THRU 8-23
NOTES	6-11 & 7-1
ILLUSTRATIONS OF ALL CASE STYLES	9-2 THRU 9-8
CROSS REFERENCE INDEX	9-9 THRU 9-25
JEDEC TO TEK PART NUMBER	9-19 & 9-20
MFG TO TEK PART NUMBER	9-21 THRU 9-25
TEK PART NUMBER TO VENDOR NUMBER	9-9 THRU 9-18
STATIC SENSITIVE NOTES	6-18
RELIABILITY NOTES	9-27 & 9-28
USING SELECTED COMPONENTS	9-32
APPLICATION NOTES	9-29 THRU 9-34
POWER TRANSISTORS PACKAGING PROBLEM	6-0
TO-220 MOUNTING SYSTEM FEATURES HIGH VOLTAGE WITHSTAND CAPABILITY	9-34

NOTE: Small-signal transistor is identified as a device that does not require "bolt-down" mounting.

CATALOG WRITER: NORMA PETERSON, EXT. 2577.

TRANSISTORS
SMALL SIGNAL, SILICON (SINGLE)
SATURATED SWITCHES

LINE	F_t MIN MHz	V_{ce}/I_c @ (V)(mA)	h_{FE} MIN	@ V_{ce}/I_c (V)(mA)	BREAKDOWN VOLTS V_{ceo}	V_{cbo}	V_{ebo}	I_{cbo} nA	C_{cb} pF	V_{ce} (SAT) mV/mA	I_c mA (MAX)	+ CASE STYLE	SIMILAR JEDEC OR VENDOR NO.	PART NUMBER	** ND	CC	†† RC	COMMENTS
										NPN								
1	350	20/10	40	1/10	20	40	5	25	.4	400/50	100	TO-18	2N2501	151-0108-00	A	H	3F	
2	400	10/10	35	1/10	15	40	4.5	400	4.	500/10	200	TO-92	2N5769	151-0223-00	A	E	5D	
3	500	10/10	40	.35/10	15	40	4.5	400	4.	500/10	200	TO-92	2N5769	151-0424-00	A	E	5D	
4	500	10/10	40	.35/10	15	40	4.5	400	4.	500/10	200	TO-92	2N5769	151-0424-04				Taped & Reeled
5	500	10/10	40	.35/10	15	40	4.5	400	4.	500/10	200	TO-92	2N5769	151-0437-00	N	G-	4F	Use 151-0424-00
6	500	10/10	40	1/10	15	40	4.5	400	4.	250/10	200	CHIP	2NC2369	151-0649-00	A	F-		
7	500	10/10	40	1/10	15	40	4.5	400	4.	250/10	200	TO-18	2N2369	151-0457-00	A	G-		
8	500	10/10	40	1/10	15	40	4.5	400	4.	250/10	200	TO-236	2N2369	151-0704-00	A	F-		
9	650	8/20	50	1/10	15	40	4.5	400	4.	250/10	200	TO-18	2N2369	151-0127-00	A	G-	5E	
										PNP								
10	500	5/10	30	.3/10	12	12	4.	10	3.5	200/10	80	TO-92	MPS3640	151-0199-00	A	E	5D	
11	500	5/10	30	.3/10	12	12	4.	10	3.5	200/10	50	TO-92	MPS3640	151-0199-05				Taped & Reeled
12	700	10/10	60	.3/10	12	12	4.5	10	3.	150/10	50	TO-92	PN4258	151-0325-00	N	F+	5E	Use 151-0221-00
13	700	10/10	30	.3/10	12	12	4.5	10	3.	150/10	50	TO-92	PN4258	151-0327-00	A	G-		
14	700	10/10	30	.3/10	12	12	4.5	10	3.	150/10	50	TO-18	PN4258	151-0458-00	A	G+		
15	900	10/10	30	.3/10	12	12	4.5	10	3.	150/10	50	TO-92	PN4258	151-0221-00	A	E-	6D	
16	900	10/10	30	.3/10	12	12	4.5	10	3.	150/10	50	TO-92	PN4258	151-0221-08				Taped & Reeled

6

SYMBOLS FOR SMALL SIGNAL TRANSISTORS

- f_t - Current Gain Bandwidth Product
- I_{cbo} - Collector Cutoff Current
- C_{cb} - Collector to Base Capacitance
- h_{FE} - DC Current Gain
- BV_{ceo} - Collector to Emitter Breakdown Voltage
- BV_{cbo} - Collector to Base Breakdown Voltage
- BV_{ebo} - Emitter to Base Breakdown Voltage
- θ_{JA} - Thermal Resistance, Junction-to-Ambient
- θ_{JC} - Thermal Resistance, Junction-to-Case
- V_{CE} - Collector-Emitter Saturation Voltage
- I_C - Collector Current, Continuous

TYPICAL PACKAGE DISSIPATION

STYLE	PWR AMB (W)	(°C/mW) θJA	θJC
X-55	625 mW	.200	.125
TO-78	500 mW	.349	
TO-77	500 mW	.349	
TO-92	625 mW	.200	.125
TO-92 (VHF)	500 mW	.500	.125
TO-92+ (TO-237)	750 mW	.167	.050
TO-72	200 mW	.877	.585
TO-18	350 mW	.500	.150
TO-46	500 mW	.438	.088
μX (#320)	700 mW	.250	.070
μX (M100)	290 mW	.610	.120
μT (μ-43)	250 mW	.500	.125
SOT-23 (TO-236)	350 mW	.357	.125
SOT-89	1 W		.030
MACRO-T	500 mW	.200	.125
TO-39	1 W	.175	.035
TO-5	1 W	.175	.035
W54	2 W		
T90	12 W	.014	.012
μT (μ23) (Ceramic)	150 mW	.833	

** NEW DESIGN CODE
A = Recommended
N = Not Recommended

TRANSISTOR GROUPS

Page 2 Saturated Switch
Page 3 Amplifier Switch
Page 4 High Beta
Page 5 High Speed Amplifier
Page 6 High Voltage
Page 7 Very High Frequency
Page 8 Medium Frequency - Low Beta
Page 9 Darlington
Page 10 Duals

COST CODE
(CC COLUMN)

CODE	A	B	C	D	E	F	G	H	I	J	K	L	M	N	O
≈ VALUE with +	.75¢	2¢	3.75¢	6¢	10¢	18¢	35¢	60¢	$1	$2	$3.75	$6	$10	$18	$35+
≈ VALUE no suffix	.5¢	1.5¢	3¢	5¢	8¢	15¢	25¢	50¢	75¢	$1.50	$3	$5	$8	$15	$25
≈ VALUE with -	.2¢	1.25¢	2.5¢	4.25¢	7¢	13¢	22¢	40¢	65¢	$1.25	$2.50	$4.25	$7	$13	$22

NOTE: Costs may vary from order to order due to order quantities, vendor, etc.

†† RELIABILITY CODES

USAGE/YR	CODE
≥10	1
≥100	2
≥1 000	3
≥10 000	4
≥100 000	5
≥1 000 000	6
≥10 000 000	7

FAILURE FREQ	CODE	%/YR (median)
1/100 000	A	= .001
1/50 000	B	= .002
1/20 000	C	= .005
1/10 000	D	= .01
1/5 000	E	= .02
1/2 000	F	= .05
1/1 000	G	= .1
1/500	H	= .2
1/200	I	= .5
1/100	J	= 1.0+

For further explanation of this code, see page 9-27.

+ FOR CASE DRAWINGS, SEE PAGES 9-2 THRU 9-8.

TRANSISTORS (CONT)
SMALL SIGNAL, SILICON (SINGLE)
AMPLIFIER SWITCH

6

LINE	F_t MIN MHz	@ V_{ce}/I_c (V)(mA)	h_{FE} MIN	@ V_{ce}/I_c (V)(mA)	BREAKDOWN VOLTS V_{ceo}	V_{cbo}	V_{ebo}	I_{cbo} nA	C_{cb} pF	V_{ce} (SAT) mV/mA	I_c mA (MAX)	† CASE STYLE	SIMILAR JEDEC OR VENDOR NO.	PART NUMBER	** ND	CC	†† RC	COMMENTS
										NPN								
1	40	10/50	50	1/150	40	60	5	100	20		500	TO-39	2N2192	151-0183-00	N	H	4F	Use 151-0136-00
2	50	10/20	60	1/100	40	50	5	100	30	500/1A	2A	TO-92+	92PU01A	151-0710-00	A	F		
3	50	5/500	40	2/2A	60	120	6	1μ	80	1V/5A	5A	TO-39	2N4895	151-0290-00	A	K-		
4	100	10/50	50	10/150	40	60	4	250	15	1.3V/150	700	TO-39	2N3053	151-0136-00	A	G+	5G	
5	100	10/50	50	10/150	80	80	4	250	15	1.4V/150	700	TO-39	2N3053	151-0136-03	N	G+	4D	
6	100	2/10	50	1/100	80	80	4	100		250/100	500	TO-92	MPSA06	151-0645-00	A	E-	2J	
7	150	5/80	50	20/10	60	80	4	50	3.5		500	TO-39	2N2219A	151-0121-00	N	I+		Use 151-0103-00
8	250	10/20	80	1/10	40	60	6	100	6.5	750/500	500	TO-92	2N4401	151-0736-00	A	E-	5E	
9	250	10/20	80	1/10	40	60	5	100	6.5	750/500	500	TO-92	2N4401	151-0736-01				Taped & Reeled
10	300	20/10	100	1/10	40	60	6	50	4	300/50	200	TO-18	2N3947	151-0460-00	N	G	4D	Use 151-0190-00
11	300	20/10	70	1/1	40	60	6	100	4	300/50	200	TO-236	2N3904	151-0706-00	A	F		
12	300	20/10	70	1/1	40	60	6	50	4	300/50	200	TO-92	2N3904	151-0190-00	A	D	6D	5dB NF Complement to 151-0188-00
13	300	20/10	70	1/1	40	60	6	50	4	300/50	200	TO-92	2N3904	151-0190-09				Taped & Reeled
14	300	20/10	70	1/1	40	60	6	50	4	300/50	200	TO-92	2N3904	151-0224-00	N	D+	5B	Use 151-0190-00
15	300	20/20	75	10/10	40	60	6	10	8	300/150	800	TO-39	2N2219A	151-0103-00	A	G-	5F	
16	300	20/20	75	10/10	40	75	6	10	8	100/50	500	TO-18	2N2222A	151-0302-00	N	F+	6D	Use 151-0736-00
17	300	10/50	25	1/10	54	80	6	1.7μ	10	400/100	1A	TO-39	2N3725	151-0604-00	A	H-	4H	
18	250	10/50	30	1/100	35	60	5	500	12	1V/1A	1A	TO-39	2N3724A	151-0260-00	A	G	4F	
19	400	10/8	30	10/8	30	40	4	50	.36		100	TO-236	MMBTH24	151-0730-00	A	F		
20	600	6/2	90	6/2	25	30	4	100	1.8	600/10	100	TO-236	MMBC1321	151-0731-00	A	F+		V_{be} Match
21	600	6/2	70	10/1.5	80	80	4	50	1	250/10	100	TO-92	MPSH05	151-0637-00	A	F-	1J	
										PNP								
22	50	10/50	60	1/100	40	50	5	100	30	500/1A	2A	TO-92+	92PU51A	151-0622-00	A	F	4F	
23	60	10/50	40	10/150	75	90	7	20	30	650/150	1A	TO-39	2N4036S	151-0208-02	A	H-	4E	
24	60	10/50	40	10/150	75	90	7	20	30	650/150	1A	TO-39	2N4036S	151-0208-00	A	H-	4G	
25	100	10/50	50	10/150	40	60	5	250	15	1.4V/150	700	TO-39	2N4890	151-0235-00	A	H	4F	rb'Cc<100ps
26	100	10/50	50	10/150	40	60	5	250	15	1.4V/150	700	TO-39	2N4890S	151-0389-00	A	H		
27	100	5/50	60	5/50	25	40	5	100	12	250/50	200	TO-92	MPS3702	151-0641-00	A	E+	1J	
28	100	2/10	50	1/10	60	60	4	100		250/100	500	TO-92	MPSA55	151-0646-00	A	F-		
29	100	5/50	100	5/50	25	40	5	100	12	250/50	200	TO-92	A5T2907	151-0164-00	A	I-	5C	
30	100	5/50	100	5/50	25	40	5	100	12	250/50	200	TO-92	A5T2907	151-0164-01				Taped & Reeled
31	200	20/50	100	10/10	60	60	5	10	8	400/50	600	TO-18	2N2907A	151-0301-00	A	F	5E	Use 151-0164-00
32	200	20/50	100	10/10	60	60	5	20	8	400/150	600	TO-39	2N2905A	151-0134-00	A	G-	5F	
33	250	20/10	80	1/1	40	40	5	50	4.5	400/50	200	TO-236	MMBT3906	151-0700-00	A	F-		
34	250	20/10	100	1/10	40	40	5	50	4.5	400/50	200	TO-92	2N3906	151-0188-00	A	D+	6D	4dB NF Complement to 151-0190-00
35	250	20/10	100	1/10	40	40	5	50	4.5	400/50	200	TO-92	2N3906	151-0188-05				Taped & Reeled
36	300	20/10	90	1/1	40	50	5	50	6	500/50	200	TO-18	2N3251	151-0459-00	A	G-	4C	6db NF
37	300	20/10	55	1/1	40	60	5	500	4	700/100	200	TO-18	2N3251	151-0289-00	A	I-		Use 151-0133-00
38	300	20/10	35	1/1	40	60	5	10	4	700/100	200	TO-18	2N3251	151-0133-00	A	G	3G	
39	400	20/10	70	10/1.5	80	80	4	50	1	250/10	100	TO-92	MPSH55	151-0640-00	A	F-		
40	600	20/10	100	1/10	40	40	5	25	4.5	300/50	200	TO-92	2N3906	151-0220-03	A	E-	5D	6dB NF rb'Cc<50ps Use 151-0188-00
41	600	20/10	100	1/10	40	40	5	25	4.5	300/50	200	TO-92	2N3906	151-0220-00	N	E	6E	6dB NF rb'Cc<50ps Use 151-0188-00

TRANSISTORS (CONT)
SMALL SIGNAL, SILICON (SINGLE)
HIGH BETA

LINE	F_t MIN MHz	@ V_{ce}/I_c (V)(mA)	h_{FE} MIN	@ V_{ce}/I_c (V)(mA)	BREAKDOWN VOLTS V_{ceo}	V_{cbo}	V_{ebo}	I_{cbo} nA	C_{cb} pF	V_{ce} (SAT) mV/mA	I_c mA (MAX)	† CASE STYLE	SIMILAR JEDEC OR VENDOR NO.	PART NUMBER	** ND	CC	†† RC	COMMENTS
										NPN								
1	40	5/1	150	10/1	45	45	6	50	4	350/1	50	TO-92	2N3565	151-0341-00	A	D+	6E	LOW NOISE AMP
2	40	5/1	150	10/1	80	100	6	50	4	350/1	50	TO-92	2N3565	151-0432-00	A	D	5D	LOW NOISE AMP
3	40	5/1	150	10/1	80	100	6	50	4	350/1	50	TO-92	2N3565	151-0432-01				Taped & Reeled
4	50	5/.5	350	5/1	30	35	4.5	50	4	500/10	50	TO-92	2N5088	151-0639-00	A	E+		Complement to 151-0276-00
5	60	5/.5	250	5/1	60	60	6	2	6	350/1	50	TO-18	2N2484	151-0126-00	A	G-	5E	
6	80	5/2	400	5/2	50	70	5	30	4	125/10	100	TO-92	2N5249	151-0273-00	A	E+	4B	
7	100	5/10	550	5/1	45	45	8	2	4	200/10	50	TO-92	2N5962	151-0456-00	A	G+		
8	150	5/10	500	5/.1	15	30	8	2	4		50	TO-92	2N5962	151-0484-00	A	G+		
9	180	4/2	180	4.5/2	25	25	5	100		300/50	500	TO-92	GET3451	151-0207-00	A	D+	5E	
10	250	10/2	250	10/2	25	30	4	50	3.5	500/50	100	TO-92	MPS6515	151-0195-00	A	D+	5E	GENERAL PURPOSE
11	250	10/2	300	10/2	25	30	4	50	3.5	500/50	100	TO-92	MPS6521	151-0192-00	A	E-	6D	GENERAL PURPOSE
										PNP								
12	40	5/.5	100	5/1	60	60	5	10	6	250/10	100	TO-92	2N5086	151-0342-00	A	D+	5E	LOW NOISE AMP
13	40	5/.5	250	5/1	50	50	3	10	4	300/10	50	TO-92	2N5087	151-0276-00	A	E-	5A	Complement to 151-0126-00
14	40	5/.5	250	5/1	50	50	3	10	4	300/10	50	TO-92	2N5087	151-0276-01				Taped & Reeled
15	50	5/.5	250	5/1	25	40	5	10	6	250/10	50	TO-92	2N4250	151-0219-00	A	D+	5E	2dB NF
16	150	5/2	200	1/1	80	80	5	100	5		100	TO-92	2N5086	151-0453-00	A	E-	5E	
17	150	5/2	200	1/1	80	80	5	100	5		100	TO-92	2N5086	151-0453-01				Taped & Reeled
18	170	10/2	300	10/2	25	25	4	50	3.5	500/25	100	TO-92	MPS6523	151-0216-00	A	E-	5C	
19	170	10/2	300	10/2	25	25	4	50	3.5	500/25	100	TO-92	MPS6523	151-0216-04				Taped & Reeled
20	200	5/2	300	1/2	60	60	5	100	4		100	TO-92	2N5087	151-0410-00	N	E-	5D	Use 151-0342-00

SYMBOLS FOR SMALL SIGNAL TRANSISTORS

- f_t - Current Gain Bandwidth Product
- I_{cbo} - Collector Cutoff Current
- C_{cb} - Collector to Base Capacitance
- h_{FE} - DC Current Gain
- BV_{ceo} - Collector to Emitter Breakdown Voltage
- BV_{cbo} - Collector to Base Breakdown Voltage
- BV_{ebo} - Emitter to Base Breakdown Voltage
- θ_{JA} - Thermal Resistance, Junction-to-Ambient
- θ_{JC} - Thermal Resistance, Junction-to-Case
- V_{CE} - Collector-Emitter Saturation Voltage
- I_C - Collector Current, Continuous

TYPICAL PACKAGE DISSIPATION

STYLE	PWR AMB (W)	(°C/mW) θJA	θJC
X-55	625 mW	.200	.125
TO-78	500 mW	.349	
TO-77	500 mW	.349	
TO-92	625 mW	.200	.125
TO-92 (VHF)	500 mW	.500	.125
TO-92+ (TO-237)	750 mW	.167	.050
TO-72	200 mW	.877	.585
TO-18	350 mW	.500	.150
TO-46	500 mW	.438	.088
μX (#320)	700 mW	.250	.070
μX (M100)	290 mW	.610	.120
μT (μ-43)	250 mW	.500	.125
SOT-23 (TO-236)	350 mW	.357	.125
SOT-89	1 W		.030
MACRO-T	500 mW	.200	.125
TO-39	1 W	.175	.035
TO-5	1 W	.175	.035
W54	2 W		
T90	12 W	.014	.012
μT (μ23) (Ceramic)	150 mW	.833	

**** NEW DESIGN CODE**

A = Recommended
N = Not Recommended

TRANSISTOR GROUPS

Page 2 Saturated Switch
Page 3 Amplifier Switch
Page 4 High Beta
Page 5 High Speed Amplifier
Page 6 High Voltage
Page 7 Very High Frequency
Page 8 Medium Frequency - Low Beta
Page 9 Darlington
Page 10 Duals

COST CODE
(CC COLUMN)

CODE	A	B	C	D	E	F	G	H	I	J	K	L	M	N	O
≈ VALUE with +	.75¢	2¢	3.75¢	6¢	10¢	18¢	35¢	60¢	$1	$2	$3.75	$6	$10	$18	$35+
≈ VALUE no suffix	.5¢	1.5¢	3¢	5¢	8¢	15¢	25¢	50¢	75¢	$1.50	$3	$5	$8	$15	$25
≈ VALUE with -	.2¢	1.25¢	2.5¢	4.25¢	7¢	13¢	22¢	40¢	65¢	$1.25	$2.50	$4.25	$7	$13	$22

NOTE: Costs may vary from order to order due to order quantities, vendor, etc.

†† RELIABILITY CODES

USAGE/YR	CODE
≥10	1
≥100	2
≥1 000	3
≥10 000	4
≥100 000	5
≥1 000 000	6
≥10 000 000	7

FAILURE FREQ	CODE	%/YR (median)
1/100 000	A	.001
1/50 000	B	.002
1/20 000	C	.005
1/10 000	D	.01
1/5 000	E	.02
1/2 000	F	.05
1/1 000	G	.1
1/500	H	.2
1/200	I	.5
1/100	J	1.0+

For further explanation of this code, see page 9-27.

† FOR CASE DRAWINGS, SEE PAGES 9-2 THRU 9-8.

TRANSISTORS (CONT)
SMALL SIGNAL, SILICON (SINGLE)
HIGH SPEED AMPLIFIER

6

LINE	F_t MIN GHz	@ V_{ce}/I_c (V)(mA)	h_{FE} MIN	@ V_{ce}/I_c (V)(mA)	BREAKDOWN VOLTS V_{ceo}	V_{cbo}	V_{ebo}	I_{cbo} nA	C_{cb} pF	V_{ce} (SAT) mV/mA	I_c mA (MAX)	† CASE STYLE	SIMILAR JEDEC OR VENDOR NO.	PART NUMBER	** ND	CC	†† RC	COMMENTS
										NPN								
1	1	6/5	30	1/3	15	30	2.5	10	1		40	CHIP	2N2857	151-0751-00	A	H-		4.5dB NF
2	1	6/5	25	1/3	8	15	2	10	1.8		50	TO-72A	2N2857	151-0138-00	N	I+		Use 151-0441-00
3	1	2/2	40	2/20	18	30	4	10	1	200/10	50	TO-72A	2N2857	151-0441-00	A	H-	5E	
4	1	10/5	60	10/5	15	30	4	100	.8	100/10	20	MAC-T	2SC288C	151-0206-00	A	G	4G	rb'Cc<15ps
5	1	5/10	30	10/20	15	30	4	10	1	150/20	100	TO-92	FMT1061	151-0269-00	A	I	4E	Use 151-0472-00
6	1	2/10	55	2/25	14	30	4	100	1.4	400/8	80	TO-92	NE41632	151-0472-00	A	I-	5E	
7	1	10/3	100	6/1	25	45	4.5	20	.7		50	TO-72A	2SC1260	151-0230-00	A	I+		4dB NF
8	1	15/15	25	5/150	25	40	3.5		4		150	TO-236	A210	151-0329-00	A	K-		
9	1.2	6/5	100	6/5	30	40	3	10	1.5	300/20	50	TO-92	A5T3571	151-0367-00	A	I-	5D	
10	1.2	6/5	100	6/5	30	40	3	10	1.5	150/20	50	TO-92	2N3571	151-0402-00	A	I	4D	
11	1.2	15/50	25	15/50	30	40	3.5	100μ	3	300/100	400	TO-39	2N5109	151-0411-00	A	I+	4G	rb'Cc<20ps
12	1.2	15/75	25	5/50	25	40	2	100μ	3.5	750/100	150	TO-39	A210	151-0288-00	A	K-	3G	
13	1.2	2/20	40	1/20	13	15	2.5	10	1		25	TO-72A	2N6304	151-0212-00	A	I	4C	BROAD BAND AMP
14	1.3	5/25	20	1/25	15	15		10	1.5		25	TO-72	A485	151-0300-00	N	K+		Use 151-0442-00
15	1.4	5/25	40	5/25	15	30	4	10	1.2	200/10	50	TO-72A	2N6304	151-0442-00	A	I		
16	1.3	10/10	75	1/10	12	20	4.5	5	2.5	300/30		TO-18	2N3959	151-0205-00	N			Use 151-0193-00
17	1.4	4/10	40	2/10	12	20	4.5		2	300/30		TO-72	2N3960	151-0193-00	A	K+		CURRENT MODE SW
18	1.4	15/70	20	10/50	25	45	3	100	3		300	TO-39	2SC1252	151-0650-00	A	K+		2.7dB NF
19	1.5	18/100	25	1/100	25	50	4	35μ	3	500/100	500	CHIP	CD3921	151-0709-00	N	M-		SIMILAR TO TEK D156
20	1.5	10/10	45	1/10	14	30	3	100	1		50	TO-236	NE73433	151-0754-00	A	I+		SELECTED FOR hFE LINEARARITY
21	1.5	10/10	25	10/10	14	30	3	100	.55		50	μX(M100)	NE73435	151-0631-00	A	J+		3.5dB NF
22	1.5	2/50	30	2/25	8	15	4	10μ	4	200/100	200	TO-46	2N5836	151-0448-00	A	J+	4F	CURRENT MODE SW
23	1.5	20/80	30	5/100	26	45	4	35μ	2.5	700/100	250	CHIP	CD2357	151-0494-00	A	K+		SIMILAR TO TEK D156
24	1.5	20/80	25	10/80	22	35	3.5	100μ	4.5	500/100	250	144D04	MRF 511	151-0474-01	A	L-		
25	1.6	2/30	30	1/10	8	15	3	50	2		100	μT(μ43)	MMT3960A	151-0293-00	N	K-	3F	rb'Cc<15ps
26	1.6	28/20	10	5/250	33	60	4	500μ	15		1A	T90	MRF5175	151-0695-00	A	L+		
27	1.8	15/50	20	15/50	25	45	3	100	3		300	CHIP	NE7400	151-0661-00	N	L		SIMILAR TO D156
										PNP								
28	1.2	5/150	30	5/25	35	35	3.5	100	5		500	TO-39	2N5583	151-0450-00	A	J	4F	rb·Cc<10ps
29	1.5	10/10	20	1/10	11.5	15	4	100	2.5	350/10	100	TO-92	A5T4260	151-0369-00	A	I	5B	rb'Cc<50ps
30	1.5	10/10	20	1/10	11.5	15	4	100	2.5	350/10	100	TO-92	A5T4260	151-0369-03				Taped & Reeled
31	1.6	10/10	30	1/10	12	15	3	100	2.5	350/10	50	TO-236	MMBT4260	151-0713-00	A	G+		

TRANSISTORS (CONT)
SMALL SIGNAL, SILICON (SINGLE)
HIGH VOLTAGE

LINE	F_t MIN MHz	@ V_{ce}/I_c (V)(mA)	h_{FE} @ MIN	V_{ce}/I_c (V)(mA)	BREAKDOWN VOLTS V_{ceo}	V_{cbo}	V_{ebo}	I_{cbo} nA	C_{cb} pF	V_{ce} (SAT) mV/mA	I_c mA (MAX)	† CASE STYLE	SIMILAR JEDEC OR VENDOR NO.	PART NUMBER	** ND	CC	†† RC	COMMENTS
										NPN								
1	15	5/1A	20	5/25	500	550	5	500	50	500/20	2A	T0-92	UPTB550	151-0708-00	A	H	4D	<200ns
2	15	10/20	40	10/20	250	300	7	100	10	500/50	1A	T0-39	2N3440S	151-0150-00	A	H-	5G	
3	15	10/10	40	10/20	350	450	7	50	10	500/50	1A	T0-39	2N3439S	151-0169-00	A	H-	5H	
4	20	10/10	50	10/10	400	500	6	100	3.5	750/20	500	T0-92	MPSA42	151-0750-00	A	H		Complement to 151-0749-00
5	30	25/10	35	25/30	300	300	7	50	10	1V/30	150	T0-92	A5T5058	151-0292-00	A	F+	5F	
6	30	40/30	30	20/10	410	450	7	100	10	1V/20	50	T0-39	SE7057	151-0297-00	A	J-	4G	
7	40	10/50	20	10/50	120	120	5	100	15		200	T0-39	2N1893S	151-0096-00	N	G+	3E	Use 151-0124-00
8	50	20/10	40	10/10	350	350	6	100	3.5	500/20	500	T0-92	MPSA42	151-0444-00	A	F-	5F	
9	50	20/10	40	20/10	300	300	7	100	3	1V/20	50	T0-39	SE7056	151-0279-00	A	G+	4H	
10	100	10/10	50	5/10	150	150	6	50	6	200/50	600	T0-39	2N3923	151-0407-00	A	H-	5F	
11	100	10/10	70	5/10	150	170	6	50	3.5	250/50	600	T0-92	MPS5551	151-0250-00	A	F-	4E	
12	100	10/10	80	5/10	160	180	6	50	6	200/50	600	T0-92	2N5551	151-0347-00	A	E+	6F	
13	100	10/10	80	5/10	160	180	6	50	6	200/50	600	T0-92	2N5551	151-0347-02				Taped & Reeled
14	100	10/10	80	5/10	180	180	6	50	6	200/50	600	T0-92	2N5551	151-0624-00	N	J+	4E	Use 151-0347-00
15	150	5/50	50	20/10	120	120	4	50	4.5		250	T0-39	2N3501S	151-0124-00	A	I	5G	rb'Cc<50ps
16	150	5/50	50	20/10	150	150		50	4.5		250	T0-39	2N3501S	151-0274-00	A	J	4F	rb'Cc<50ps
17	150	20/20	75	10/10	100	100	6	5μ	10	600/300	500	T0-39	2N3499S	151-0200-00	A	J	3F	
										PNP								
18	15	10/10	30	10/50	300	350	6	50μ	15	2V/50	1A	T0-39	2N5416	151-0385-00	N	I	3F	Use 151-0280-00
19	30	10/1	40	10/10	175	175	6	50	4	500/10	500	T0-92	MPSA93	151-0228-00	A	F+	4F	
20	30	10/10	50	5/5	250	250	4	5μ	20	5V/10	500	T0-39	2N4931	151-0280-00	A	I	4G	
21	40	20/10	40	10/10	400	400	5	100	6	800/20	500	T0-92	MPSA92	151-0749-00	A	H+		Complement to 151-0750-00
22	50	20/10	40	10/10	300	300	5	250	6	800/20	500	T0-92	MPSA92	151-0443-00	A	F-	5F	
23	50	20/10	40	10/10	300	300	5	250	6	800/20	500	T0-92	MPSA92	151-0443-03				Taped & Reeled
24	100	10/10	50	5/10	150	150	5	50	6	250/50	600	T0-39	2N5401	151-0406-00	A	H+	5F	
25	100	10/10	60	5/10	150	160	5	50	6	250/50	600	T0-92	2N5401	151-0350-00	A	E+	5E	
26	100	10/10	60	5/10	150	160	5	50	6	250/50	600	T0-92	2N5401	151-0350-03				Taped & Reeled
27	150	10/20	40	10/10	120	120	4.5	100	6	350/10	100	T0-39	2N3495	151-0214-00	N	H	3H	rb'Cc<30ps Use 151-0270-00
28	150	10/20	40	10/10	150	150	3.5	1μ	6	600/10	300	T0-39	2N3495	151-0270-00	A	H	5F	

COST CODE
(CC COLUMN)

CODE	A	B	C	D	E	F	G	H	I	J	K	L	M	N	O
≈ VALUE with +	.75¢	2¢	3.75¢	6¢	10¢	18¢	35¢	60¢	$1	$2	$3.75	$6	$10	$18	$35+
≈ VALUE no suffix	.5¢	1.5¢	3¢	5¢	8¢	15¢	25¢	50¢	75¢	$1.50	$3	$5	$8	$15	$25
≈ VALUE with -	.2¢	1.25¢	2.5¢	4.25¢	7¢	13¢	22¢	40¢	65¢	$1.25	$2.50	$4.25	$7	$13	$22

NOTE: Costs may vary from order to order due to order quantities, vendor, etc.

†† RELIABILITY CODES

USAGE/YR	CODE
≥10	1
≥100	2
≥1 000	3
≥10 000	4
≥100 000	5
≥1 000 000	6
≥10 000 000	7

FAILURE FREQ	CODE	%/YR (median)
1/100 000	A	= .001
1/50 000	B	= .002
1/20 000	C	= .005
1/10 000	D	= .01
1/5 000	E	= .02
1/2 000	F	= .05
1/1 000	G	= .1
1/500	H	= .2
1/200	I	= .5
1/100	J	= 1.0+

For further explanation of this code, see page 9-27.

† FOR CASE DRAWINGS, SEE PAGES 9-2 THRU 9-8.

TRANSISTORS (CONT)
SMALL SIGNAL, SILICON (SINGLE)
VERY HIGH FREQUENCY

6

LINE	F_t MIN GHz	@ V_{ce}/I_c (V)(mA)	h_{FE} MIN	@ V_{ce}/I_c (V)(mA)	BREAKDOWN VOLTS V_{ceo}	V_{cbo}	V_{ebo}	I_{cbo} nA	C_{cb} pF	V_{ce} (SAT) mV/mA	I_c mA (MAX)	† CASE STYLE	SIMILAR JEDEC OR VENDOR NO.	PART NUMBER	** ND	CC	†† RC	COMMENTS
										NPN								
1	500 MHz	25/50	25	10/5	100	100	3.5			1V/10		TO-39	MRF531	151-0756-00		J-		
2	2	5/10	30	1/10	8	15	3	50	2	200/10	100	CHIP	MMT3960	151-0380-00	A	K-		
3	2	2/10	40	2/50	10	20	3.8	10	1.5	200/25	100	TO-72A	2N5841	151-0447-00	N	J+	4F	CURRENT MODE SW
4	2	4/25	25	4/25	10	20	3	10	1		300	TO-72A	2N5841	151-0298-00	N	L		rb'Cc 30ps Use 151-0447-00
5	2.5	10/10	30	10/10	15	10	3	500	.7		30	TO-72A	2N5652	151-0330-00	A	N+		2.5dB NF
6	2.5	3/15	30	1/30	12	20	3	500	1.5		50	μT	V327	151-0295-00	A	N-	1J	2.4dB NF
7	4	8/10	30	8/10	11	25	3	100	.6		50	μX(M100)	NE57835	151-0689-00	A	L-		5.5dB NF
8	4.5	10/14	25	10/14	15	20	2	50	.75		25	TO-236	BFR92	151-0636-00	A	J	3E	2.4dB NF
9	4.5	10/50	30	10/50	15	20	3	100	1.5		100	MAC-T	BFR96	151-0752-00	A	I+	5D	2.0dB NF
10	4.5	10/20	20	10/20	12	25	3	1μ	1		70	μX(#320)	NE02103	151-0658-00	A	M+	3H	
11	4.5	10/20	30	10/20	12	25	3	1μ	.6		70	μX(M100)	NE02135	151-0630-00	A	J+	4G	4.0dB NF
12	5	5/30	25	5/30	12	15	3	50	.7		35	MAC-T	BFR91	151-0475-00	A	J+	3H	1.9dB NF
13	6.5	8/10	50	8/7	12	25	1.5	1μ	.7		65	μX(M100)	NE64535	151-0608-00	A	M+		1.4dB NF
14	8	10/20	50	8/20	10	20	1.5	1μ	1		80	μX(M100)	NE21935	151-0609-00	A	L		3.5dB NF
										PNP								
15	650 MHz	2/7	25	2/7	12	15	4	50	2.3	300/10	50	TO-72A	2N4260	151-0142-00	N	J+		Use 151-0434-00
16	600 MHz	4/20	40	4/20	12	15	4	50	2.5	300/10	50	TO-72A	2N4260	151-0167-00	N	L+		Use 151-0434-00
17	2	10/10	20	2/30	12	15	4.5	100	3	400/10	30	μT(μ43)	2N4261	151-0294-00	N	F-		
18	2	10/10	30	1/10	12	15	4	100	2.5	350/10	80	TO-92	A5T4261	151-0271-00	A	I	5C	
19	2	10/10	30	1/10	12	15	4	100	2.5	350/10	30	TO-72A	2N4261	151-0434-00	A	H+	5D	
20	2	10/15	30	1/10	15	15	4.5	5	2.5	250/10	30	TO-72A	2N4261	151-0202-00	N	I	4F	Use 151-0434-00
21	4	2/15	15	2/15	10	10	4.5	10	1.5		30	μT(μ43)	MM4049	151-0362-00	N	K	4E	
22	4	2/15	20	2/10	10	15	4.5	10	1.2		30	TO-72A	MM4049	151-0296-00	A	L	3H	
23	4	2/15	40	2/10	10	15	4.5	10	1.2		30	CHIP	MM4049	151-0379-00	A	K-		

SYMBOLS FOR SMALL SIGNAL TRANSISTORS

- f_t - Current Gain Bandwidth Product
- I_{cbo} - Collector Cutoff Current
- C_{cb} - Collector to Base Capacitance
- h_{FE} - DC Current Gain
- BV_{ceo} - Collector to Emitter Breakdown Voltage
- BV_{cbo} - Collector to Base Breakdown Voltage
- BV_{ebo} - Emitter to Base Breakdown Voltage
- θ_{JA} - Thermal Resistance, Junction-to-Ambient
- θ_{JC} - Thermal Resistance, Junction-to-Case
- V_{CE} - Collector-Emitter Saturation Voltage
- I_C - Collector Current, Continuous

TYPICAL PACKAGE DISSIPATION

STYLE	PWR AMB (W)	(°C/mW) θJA	θJC
X-55	625 mW	.200	.125
TO-78	500 mW	.349	
TO-77	500 mW	.349	
TO-92	625 mW	.200	.125
TO-92 (VHF)	500 mW	.500	.125
TO-92+ (TO-237)	750 mW	.167	.050
TO-72	200 mW	.877	.585
TO-18	350 mW	.500	.150
TO-46	500 mW	.438	.088
μX (#320)	700 mW	.250	.070
μX (M100)	290 mW	.610	.120
μT (μ-43)	250 mW	.500	.125
SOT-23 (TO-236)	350 mW	.357	.125
SOT-89	1 W		.030
MACRO-T	500 mW	.200	.125
TO-39	1 W	.175	.035
TO-5	1 W	.175	.035
W54	2 W		
T90	12 W	.014	.012
μT (μ23) (Ceramic)	150 mW	.833	

** NEW DESIGN CODE
A = Recommended
N = Not Recommended

TRANSISTOR GROUPS

Page 2 Saturated Switch
Page 3 Amplifier Switch
Page 4 High Beta
Page 5 High Speed Amplifier
Page 6 High Voltage
Page 7 Very High Frequency
Page 8 Medium Frequency - Low Beta
Page 9 Darlington
Page 10 Duals

TRANSISTORS (CONT)
SMALL SIGNAL, SILICON (SINGLE)
MEDIUM FREQUENCY-LOW BETA

LINE	F_t MIN MHz	@ V_{ce}/I_c (V)(mA)	h_{FE} MIN	@ V_{ce}/I_c (V)(mA)	BREAKDOWN VOLTS V_{ceo}	V_{cbo}	V_{ebo}	I_{cbo} nA	C_{cb} pF	V_{ce} (SAT) mV/mA	I_c mA (MAX)	† CASE STYLE	SIMILAR JEDEC OR VENDOR NO.	PART NUMBER	** ND	CC	†† RC	COMMENTS
										NPN								
1	500	25/25	40	15/50	50	60	3.5	20µ	3	1V/100	400	TO-39	2N3866	151-0211-00	A	I	4H	
2	500	15/50	10	5/50	30	55	3.5	20µ	3		400	TO-39	2N3866	151-0446-00	A	H	4H	
3	500	5/50	30	5/160	30	55	5	35µ	3	1V/100	400	CHIP	2NC3866	151-0498-00	A	H		
4	600	10/8	20	10/8	12	30	2	50	1.7	200/10	50	TO-92	2N3563	151-0225-00	A	E	4E	
5	600	2/10	40	.5/20	15	30	3	25	1.7	400/10	50	TO-72A	2N918	151-0109-00	N	H	4F	
6	600	10/4	40	1/3	15	30	3	10	1.7	400/10	50	TO-92	MPS918	151-0198-00	A	E+	5B	6.0dB NF
7	600	10/4	40	1/3	15	30	3	10	1.7	400/10	50	TO-92	MPS918	151-0198-04				Taped & Reeled
8	600	10/4	100	1/3	10	30	3	10	1.7	400/10	100	TO-92	MPS918	151-0333-00	A	F-	5E	6.0dB NF
9	700	5/50	20	5/50	16	36	4	500µ	8		400	W54	2N6256	151-0617-00	A	J+		RF Power
10	800	10/3	40	6/1	20	35	3	20	1.3		50	TO-72A	2N918	151-0283-00	N	G+	4F	4.5dB NF Use 151-0198-00
11	800	15/50	25	5/50	25	45	2.5	20	4	1V/100	150	SOT-89	BFQ17	151-0715-00	A	I+		
12	800	5/25	30	5/25	25	55	4	100	6	200/100	400	TO-39	2N5943	151-0451-00	A	I-	4F	rb'Cc<15ps
13	800	4/20	60	1/4	25	25	3	100	.7	500/4	50	TO-92B	MPSH10	151-0720-00	A	F-	3H	Complement to 151-0719-00
14	900	10/8	60	1/4	20	25	3	100	.7	500/4	50	TO-92B	MPSH10	151-0711-00	A	F-	5D	Complement to 151-0712-00
15	900	10/8	60	1/4	20	25	3	100	.7	500/4	50	TO-92B	MPSH10	151-0711-02				Taped & Reeled
16	900	6/5	25	1/3	20	35	3	20	1	400/10	50	TO-72A	2N5179	151-0282-00	A	H-	4E	
17	900	6/5	40	1/5	12	20	2.5	20	1	400/10	50	TO-236	MMBT5179	151-0714-00	A	G+		
18	900	10/8	20	10/8	15	30	3	10	1.7	400/10	50	TO-92	2N5770	151-0471-00	A	H		
19	1G	10/8	70	1/8	12	30	2	50	1.7	200/10	50	TO-92	2N3563	151-0427-00	A	F	5C	
20	1G	10/8	20	10/8	12	30	2	50	1.7	200/10	50	TO-92	2N3563	151-0259-00	N	E-		Use 151-0427-00
										PNP								
21	500	15/50	25	5/50	40	60	4	1µ	4		400	TO-39	2N5160	151-0285-00	A	K	4H	
22	600	10/5	60	10/5	20	20	3	100	.85	500/5	50	TO-236	MMBTH81	151-0663-00	A	G		rb'Cc<30ps
23	750	4/5	60	1/20	25	25	3	100	.85	500/5	60	TO-92B	MPSH81	151-0719-00	A	F	3H	rb'Cc<15ps Complement to 151-0720-00
24	800	10/10	60	1/5	15	20	3	100	.85	500/5	60	TO-92B	MPSH81	151-0712-00	A	F	6B	rb'Cc<10ps Compliment to 151-0711-00
25	800	10/10	60	1/5	15	20	3	100	.85	500/5	60	TO-92B	MPSH81	151-0712-02				Taped & Reeled
26	1G	2/5	80	1/20	20	20	3	100	.85	500/5	50	TO-92B	MMSH81	151-0438-00	N	G	5D	Use 151-0712-00

TRANSISTORS (CONT)
SMALL SIGNAL, SILICON (SINGLE)
DARLINGTON

6

LINE	F_t MIN MHz	@ V_{ce}/I_c (V)(mA)	h_{FE} @ MIN	V_{ce}/I_c (V)(mA)	BREAKDOWN VOLTS V_{ceo}	V_{cbo}	V_{ebo}	I_{cbo} nA	C_{cb} pF	V_{ce} (SAT) mV/mA	I_c mA (MAX)	† CASE STYLE	SIMILAR JEDEC OR VENDOR NO.	PART NUMBER	** ND	CC	†† RC	COMMENTS
										NPN								
1	40	5/1A	1K	5/1A	80	100	5	10μ	50		5A	TO-92	UTA508	151-0699-00	A	H-	3F	<1.5μs
2	50	10/50	15K	5/500	50	60	12	100		1.5/1A	2A	TO-92+	92PU45A	151-0716-00	A	F+		
3	60	5/2	20K	5/100	40	40	12	100	10	1.4/200	200	TO-92	2N5308	151-0254-00	A	E+	5E	
4	60	5/2	20K	5/100	40	40	12	100	10	1.4/200	200	TO-92	2N5308	151-0254-03				Taped & Reeled
5	60	5/2	6K	5/100	25	25	12	100	10	1.4/200	200	TO-98A	2N5305	151-0281-00	A	F	5D	
										PNP								
6	100	5/10	20K	5/100	30	30	8	100	4	1.5V/100	300	TO-92	MPSA65	151-0435-00	A	F-	5D	

SYMBOLS FOR SMALL SIGNAL TRANSISTORS

- f_t - Current Gain Bandwidth Product
- I_{cbo} - Collector Cutoff Current
- C_{cb} - Collector to Base Capacitance
- h_{FE} - DC Current Gain
- BV_{ceo} - Collector to Emitter Breakdown Voltage
- BV_{cbo} - Collector to Base Breakdown Voltage
- BV_{ebo} - Emitter to Base Breakdown Voltage
- θ_{JA} - Thermal Resistance, Junction-to-Ambient
- θ_{JC} - Thermal Resistance, Junction-to-Case
- V_{CE} - Collector-Emitter Saturation Voltage
- I_C - Collector Current, Continuous

TYPICAL PACKAGE DISSIPATION

STYLE	PWR AMB (W)	(°C/mW) θJA	θJC
X-55	625 mW	.200	.125
TO-78	500 mW	.349	
TO-77	500 mW	.349	
TO-92	625 mW	.200	.125
TO-92 (VHF)	500 mW	.500	.125
TO-92+ (TO-237)	750 mW	.167	.050
TO-72	200 mW	.877	.585
TO-18	350 mW	.500	.150
TO-46	500 mW	.438	.088
μX (#32Q)	700 mW	.250	.070
μX (M100)	290 mW	.610	.120
μT (μ-43)	250 mW	.500	.125
SOT-23 (TO-236)	350 mW	.357	.125
SOT-89	1 W		.030
MACRO-T	500 mW	.200	.125
TO-39	1 W	.175	.035
TO-5	1 W	.175	.035
W54	2 W		
T90	12 W	.014	.012
μT (μ23) (Ceramic)	150 mW	.833	

** NEW DESIGN CODE
A = Recommended
N = Not Recommended

TRANSISTOR GROUPS

Page 2 Saturated Switch
Page 3 Amplifier Switch
Page 4 High Beta
Page 5 High Speed Amplifier
Page 6 High Voltage
Page 7 Very High Frequency
Page 8 Medium Frequency - Low Beta
Page 9 Darlington
Page 10 Duals

COST CODE
(CC COLUMN)

CODE	A	B	C	D	E	F	G	H	I	J	K	L	M	N	O
≈ VALUE with +	.75¢	2¢	3.75¢	6¢	10¢	18¢	35¢	60¢	$1	$2	$3.75	$6	$10	$18	$35+
≈ VALUE no suffix	.5¢	1.5¢	3¢	5¢	8¢	15¢	25¢	50¢	75¢	$1.50	$3	$5	$8	$15	$25
≈ VALUE with -	.2¢	1.25¢	2.5¢	4.25¢	7¢	13¢	22¢	40¢	65¢	$1.25	$2.50	$4.25	$7	$13	$22

NOTE: Costs may vary from order to order due to order quantities, vendor, etc.

†† CATALOG RELIABILITY CODES

USAGE/YR	CODE
≥10	1
≥100	2
≥1 000	3
≥10 000	4
≥100 000	5
≥1 000 000	6
≥10 000 000	7

FAILURE FREQ	CODE	%/YR (median)
1/100 000	A	= .001
1/50 000	B	= .002
1/20 000	C	= .005
1/10 000	D	= .01
1/5 000	E	= .02
1/2 000	F	= .05
1/1 000	G	= .1
1/500	H	= .2
1/200	I	= .5
1/100	J	= 1.0 +

For further explanation of this code, see page 9-27.

+ FOR CASE DRAWINGS, SEE PAGES 9-2 THRU 9-8.

TRANSISTORS (CONT)
SMALL SIGNAL, SILICON
DUALS

LINE	F_t MIN MHz	@ V_{ce}/I_c (V)(mA)	h_{FE} MIN	@ V_{ce}/I_c (V)(mA)	BREAKDOWN VOLTS V_{ceo}	V_{cbo}	V_{ebo}	I_{cbo} nA	C_{cb} pF	V_{ce} (SAT) mV/mA	I_c mA (MAX)	† CASE STYLE	SIMILAR JEDEC OR VENDOR NO.	PART NUMBER	** ND	CC	†† RC	COMMENTS
										NPN								
1	60	5/1	200	5/1	25	50	6	2	3	300/1	30	TO-78	IT120	151-0236-00	A	J+	4D	3.0dB NF MONOLITHIC
2	100	5/1	150	5/1	15	25	6.5	1	3	300/5	20	TO-78	IT121	151-0353-00	A	J-	4E	4.8dB NF MONOLITHIC
3	100	1/1	100	1/1	30	40	7	25	6		30	TO-78	2N2484	151-0308-00	A	K	3G	4.0nV/HZ NF
4	100	1/1	100	1/.1	35	40	8	25	6		30	TO-78	2N2484	151-0232-00	A	I	5F	
5	127	5/10	120	10/5	50	50	8	50	6	1V/10	30	TO-78	2N2484	151-0104-00	A	J-		
6	200	10/1	50	10/1	30	50	5	100	8	300/10	500	TO-78	2N2222A	151-0176-00	A	J+		
7	250	10/50	45	5/1	30	60	5	20	8	400/150	500	TO-78	2N2222	151-0309-00	A	J+	3G	
8	600	10/4	30	.5/10	12	20	4.5	25	1.7	400/10	50	TO-78	2N918	151-0139-00	A	J+		
9	1G	5/10	100	5/10	14	30	4		3			TO-78	2N3959	151-0461-00	A	K+	4E	
10	1G	10/10	40	5/10	20	30	4	10	1	100/20	100	TO-78	2N2857	151-0267-00	A	K-	3F	
11	1.2G	2/20	25	5/15	15	30	2.5	10	1		50	TO-78	A485	151-0268-00	A	K+	4F	3.0dB NF
12			250	5/.1	40	40				100/20	20	TO-78	LM394	151-0619-00	A	K-		LOG AMP
13	1.6G	2.5/5	30	2/5	8	15	3.5	1	1.5	400/10	30	TO-99	SL360	151-0725-00	A	K-	4E	ULTRA MATCHED
										PNP								
14	100	5/1	150	5/1	60	60	5	10	4	250/1		TO-78	2N3808	151-0178-00	A	K+		
15	100	5/1	150	5/1	45	45	5	10	6	250/1	50	TO-78	2N3808	151-0261-00	A	I+	4E	
16	100	5/1	150	5/1	45	45	5	10	6	250/1	50	TO-78	2N3808	151-0261-01	A	J-	4E	1.5dB NF 1K
17	100	5/1	40	5/5	25	25	6	1	3	900/5		TO-78	ITS1200	151-0354-00	A	I+	5F	MONOLITHIC
18	200	20/50	135	5/1	45	45	5	10	8	250/50		TO-78	2N2907	151-0307-00	A	K		
19	400	5/10	30	5/10	10	10	4.5	15	3	400/10	50	TO-78	2N4258	151-0467-00	A	K-		
20	2G	10/15	30	1/10	15	15	4.5	5	2.5	1/30		TO-78	2N4261	151-0272-00	A	L-	3E	
										NPN/PNP								
21	200	20/20	75	10/10	30	40	5	10	10	400/150	500	TO-78	TD702	151-0361-00	A	I+	4F	NPN/PNP PLASTIC

6

SYMBOLS FOR SMALL SIGNAL TRANSISTORS

- f_t - Current Gain Bandwidth Product
- I_{cbo} - Collector Cutoff Current
- C_{cb} - Collector to Base Capacitance
- h_{FE} - DC Current Gain
- BV_{ceo} - Collector to Emitter Breakdown Voltage
- BV_{cbo} - Collector to Base Breakdown Voltage
- BV_{ebo} - Emitter to Base Breakdown Voltage
- θ_{JA} - Thermal Resistance, Junction-to-Ambient
- θ_{JC} - Thermal Resistance, Junction-to-Case
- V_{CE} - Collector-Emitter Saturation Voltage
- I_C - Collector Current, Continuous

TYPICAL PACKAGE DISSIPATION

STYLE	PWR AMB (W)	(°C/mW) θJA	θJC
X-55	625 mW	.200	.125
TO-78	500 mW	.349	
TO-77	500 mW	.349	
TO-92	625 mW	.200	.125
TO-92 (VHF)	500 mW	.500	.125
TO-92+ (TO-237)	750 mW	.167	.050
TO-72	200 mW	.877	.585
TO-18	350 mW	.500	.150
TO-46	500 mW	.438	.088
μX (#320)	700 mW	.250	.070
μX (M100)	290 mW	.610	.120
μT (μ-43)	250 mW	.500	.125
SOT-23 (TO-236)	350 mW	.357	.125
SOT-89	1 W		.030
MACRO-T	500 mW	.200	.125
TO-39	1 W	.175	.035
TO-5	1 W	.175	.035
W54	2 W		
T90	12 W	.014	.012
μT (μ23) (Ceramic)	150 mW	.833	

** NEW DESIGN CODE
A = Recommended
N = Not Recommended

TRANSISTOR GROUPS

Page 2 Saturated Switch
Page 3 Amplifier Switch
Page 4 High Beta
Page 5 High Speed Amplifier
Page 6 High Voltage
Page 7 Very High Frequency
Page 8 Medium Frequency - Low Beta
Page 9 Darlington
Page 10 Duals

† FOR CASE DRAWINGS, SEE PAGES 9-2 THRU 9-8.

NOTES

6

†† CATALOG RELIABILITY CODES

USAGE/YR	CODE
≥10	1
≥100	2
≥1 000	3
≥10 000	4
≥100 000	5
≥1 000 000	6
≥10 000 000	7

FAILURE FREQ	CODE		%/YR (median)
1/100 000	A	=	.001
1/50 000	B	=	.002
1/20 000	C	=	.005
1/10 000	D	=	.01
1/5 000	E	=	.02
1/2 000	F	=	.05
1/1 000	G	=	.1
1/500	H	=	.2
1/200	I	=	.5
1/100	J	=	1.0 +

For further explanation of this code, see page 9-27.

COST CODE

(CC COLUMN)

CODE	A	B	C	D	E	F	G	H	I	J	K	L	M	N	O
≈ VALUE with +	.75¢	2¢	3.75¢	6¢	10¢	18¢	35¢	60¢	$1	$2	$3.75	$6	$10	$18	$35+
≈ VALUE no suffix	.5¢	1.5¢	3¢	5¢	8¢	15¢	25¢	50¢	75¢	$1.50	$3	$5	$8	$15	$25
≈ VALUE with -	.2¢	1.25¢	2.5¢	4.25¢	7¢	13¢	22¢	40¢	65¢	$1.25	$2.50	$4.25	$7	$13	$22

NOTE: Costs may vary from order to order due to order quantities, vendor, etc.

TRANSISTORS (CONT)

SMALL SIGNAL, SILICON (IN TOTAL F_t ORDER)

SINGLE(NPN)

F_t MIN MHz	@ V_{ce}/I_c (V)(mA)	h_{FE} MIN/MAX	@ V_{ce}/I_c (V)(mA)	BREAKDOWN VOLTS V_{ceo}	V_{cbo}	V_{ebo}	C_{cb} pF	V_{ce} (SAT) Volts	I_c mA (MAX)	PWR AMB (W)	(°C/MW) θ_{JA}	θ_{JC}	† CASE STYLE	JEDEC OR VENDOR NO.	PART NUMBER	** ND	CC	†† RC	COMMENTS
15	5/1A	20	5/25	500	550	5.	50.	500/20	2A	.625	.200	.125	TO-92	UPTB550	151-0708-00	A	H	4D	< 200ns
15	10/10	40/140	10/20	250	300	7.	10.	500/50	500	1.000	.175	.035	TO-39	SN3440S	151-0150-00	A	H-	5G	
15	10/10	40/160	10/20	350	450	7.	10.	500/50	1A	1.000	.175	.035	TO-39	SN3439S	151-0169-00	A	H-	5H	
20	10/10	50	10/10	400	500	6	3.5	750/20	500	.625	.200	.125	TO-92	MPSA42	151-0750-00	A	H		
30	25/10	35/150	25/30	300	300	7.	10.	1V/30	150	.625	.200	.125	TO-92	A5T5058	151-0292-00	A	F+	5F	
30	40/30	30	20/10	410	450	7.	10.	1V/20	50	1.000	.175	.035	TO-39	SE7057	151-0297-00	A	J-	4G	
40	5/1A	1K	5/1A	80	100	5.	50.		5A	.625	.200	.125	TO-92	UTA508	151-0699-00	A	H-	3F	< 1.5μs
40	5/1	150/600	10/1	45	45	6.	4.	350/1	50	.625	.200	.125	TO-92	2N3565	151-0341-00	A	D+	6E	LOW NOISE AMP
40	5/1	150/600	10/1	80	100	6.	4.	350/1	50	.625	.200	.125	TO-92	2N3565	151-0432-00	A	D	5D	LOW NOISE AMP
40	5/1	150/600	10/1	80	100	6.	4.	350/1	50	.625	.200	.125	TO-92	2N3565	151-0432-01				Taped & Reeled
40	10/50	20	10/50	120	120	5.	15.		200	1.000	.175	.035	TO-39	2N1893S	151-0096-00	N	G+	3E	Use 151-0124-00
40	10/50	50	1/150	40	60	5.	20.		500	1.000	.175	.035	TO-39	2N2192	151-0183-00	N	H	4F	Use 151-0136-00
50	5/.5	350	5/1	30	35	4.5	4.	500/10	50	.625	.200	.125	TO-92	2N5088	151-0639-00	A	E+		
50	5/500	40/120	2/2A	60	120	6.	80.	1V/5A	5A	1.000	.175	.035	TO-39	2N4895	151-0290-00	A	K-		
50	10/20	60	1/100	40	50	5.	30.	500/1A	2A	.750	.167	.050	TO-92+	92PU01A	151-0710-00	A	F		
50	10/50	15K	5/500	50	60	12.		1.5/1A	2A	.750	.167	.050	TO-92+	92PU45A	151-0716-00	A	F+		
50	20/10	40	20/10	300	300	7.	3.	1V/20	50	1.000	.175	.035	TO-39	SE7056	151-0279-00	A	G+	4H	
50	20/10	40	10/10	350	350	6.	3.5	500/20	500	.625	.200	.125	TO-92	MPSA42	151-0444-00	A	F-	5F	
60	5/2	6K	5/100	25	25	12.	10.	1.4/200	200	.625	.200	.125	TO-98A	2N5305	151-0281-00	A	F	5D	
60	5/2	20K	5/100	40	40	12.	10.	1.4/200	200	.625	.200	.125	TO-92	2N5308	151-0254-00	A	E+	5E	
60	5/2	20K	5/100	40	40	12.	10.	1.4/200	200	.625	.200	.125	TO-92	2N5308	151-0254-03				Taped & Reeled
60	5/5	250/500	5/1	60	60	6.	6.	350/1	50	.350	.500	.150	TO-18	2N2484	151-0126-00	A	G-	5E	
80	5/2	400/800	5/2	50	70	5.	4.	125/10	100	.625	.200	.125	TO-92	2N5249	151-0273-00	A	E+	4B	
100	2/10	50	1/100	80	80	4.		250/100	500	.625	.200	.125	TO-92	MPSA06	151-0645-00	A	E-	2J	
100	5/10	550	5/1	45	45	8.	4.	200/10	50	.625	.200	.125	TO-92	2N5962	151-0456-00	A	G+		
100	10/10	70	5/10	150	170	6.	3.5	250/50	600	.625	.200	.125	TO-92	MPS5551	151-0250-00	A	F-	4E	
100	10/10	50/50	5/10	150	150	6.	6.	200/50	600	1.000	.175	.035	TO-39	2N3923	151-0407-00	A	H-	5F	
100	10/10	/250	5/10	160	180	6.	6.	200/50	600	.625	.200	.125	TO-92	2N5551	151-0347-00	A	E+	6F	
100	10/10	80/250	5/10	160	180	6.	6.	200/50	600	.625	.200	.125	TO-92	2N5551	151-0347-02				Taped & Reeled
100	10/10	80	5/10	180	180	6.	6.	200/50	600	.625	.200	.125	TO-92	2N5551	151-0624-00	N	J+	4E	Use 151-0347-00
100	10/50	50/250	10/150	80	80	4.	15.	1.4V/150	700	1.000	.175	.035	TO-39	2N3053	151-0136-03	N	G+	4D	
100	10/50	50/250	10/150	40	60	4.	15.	1.3V/150	700	1.000	.175	.035	TO-39	2N3053	151-0136-00	A	G+	5G	
150	5/10	500	5/.1	15	30	8.	4.		50	1.000	.200	.125	TO-92	2N5962	151-0484-00	A	G+		
150	5/50	50	20/10	150	150		4.5		250	1.000	.175	.035	TO-39	2N3501S	151-0274-00	A	J	4F	rb'Cc<50ps
150	5/50	50	20/10	120	120	4.	4.5		250	1.000	.175	.035	TO-39	2N3501S	151-0124-00	A	I	5G	rb'Cc<50ps
150	5/80	50	20/10	60	80	4.	3.5		500	1.000	.175	.035	TO-39	2N2219A	151-0121-00	N	I+		Use 151-0103-00
150	20/20	75/300	10/10	100	100	6.	10.	600/300	500	1.000	.175	.035	TO-39	2N3499S	151-0200-00	A	J	3F	
180	4/2	180	4.5/2	25	25	5.		300/50	500	.625	.200	.125	TO-92	GET3451	151-0207-00	A	D+	5E	
250	10/2	300/600	10/2	25	30	4.	3.5	500/50	100	.625	.200	.125	TO-92	MPS6521	151-0192-00	A	E-	6D	GENERAL PURPOSE
250	10/2	250	10/2	25	30	4.	3.5	500/50	100	.625	.200	.125	TO-92	MPS6515	151-0195-00	A	D+	5E	GENERAL PURPOSE
250	10/20	80	1/10	40	60	6.	6.5		500	.625	.200	.125	TO-92	2N4401	151-0736-00	A	E-	5E	
250	10/20	80	1/10	40	60	5.	6.5		500	.625	.200	.125	TO-92	2N4401	151-0736-01				Taped & Reeled
250	10/50	30	1/100	35	60	5.	12.	1V/1A	1A	1.000	.175	.035	TO-39	2N3724A	151-0260-00	A	G	4F	
300	20/10	70/300	1/1	40	60	6.	4.	300/50	200	.350	.357	.125	TO-236	2N3904	151-0706-00	A	F		
300	20/10	100/300	1/10	40	60	6.	4.	300/50	200	.350	.500	.150	TO-18	2N3947	151-0460-00	N	G	4D	Use 151-0190-00
300	20/10	70	1/1	40	60	6.	4.	300/50	200	.625	.200	.125	TO-92	2N3904	151-0224-00	N	D+	5B	
300	20/10	70	1/1	40	60	6.	4.	300/50	200	.625	.200	.125	TO-92	2N3904	151-0190-00	A	D	6D	5dB NF
300	20/10	70	1/1	40	60	6.	4.	300/50	200	.625	.200	.125	TO-92	2N3904	151-0190-09				Taped & Reeled
300	20/20	75/300	10/10	40	75	6.	8.	100/50	500	.350	.500	.150	TO-18	2N2222A	151-0302-00	N	F+	6D	Use 151-0736-00
300	20/20	75/300	10/10	40	60	6.	8.	300/150	800	1.000	.175	.035	TO-39	2N2219A	151-0103-00	A	G-	5F	
300	10/50	25	1/10	54	80	6.	10.	400/100	1A	1.000	.175	.035	TO-39	2N3725	151-0604-00	A	H-	4H	
350	20/10	40	1/10	20	40	5.	4.	400/50	100	.350	.500	.150	TO-18	2N2501	151-0108-00	A	H	3F	
400	10/8	30	10/8	30	40	4.	.36		100	.350	.357	.125	TO-236	MMBTH24	151-0730-00	A	F		
400	10/10	35	1/10	15	40	4.5	4.	500/10	200	.625	.200	.125	TO-92	2N5769	151-0223-00	A	E	5D	
500	5/50	30	5/160	30	55	5.	3.	1V/100	400				CHIP	2NC3866	151-0498-00	A	H		
500	10/10	40	1/10		40	4.5	4.	250/10	200	.350	.500	.150	TO-18	2N2369	151-0457-00	A	G-		
500	10/10	40/120	.35/10	15	40	4.5	4.	500/10	200	.625	.200	.125	TO-92	2N5769	151-0424-00	A	E	5D	
500	10/10	40/120	.35/10	15	40	4.5	4.	500/10	200	.625	.200	.125	TO-92	2N5769	151-0424-04				Taped & Reeled
500	10/10	40/120	1/10	15	40	4.5	4.	250/10	200	.350	.357	.125	TO-236	2N2369	151-0704-00	A	F-		
500	10/10	40	1/10	15	40	4.5	4.	250/10	200				CHIP	2NC2369	151-0649-00	A	F-		
500	15/50	10	5/50	30	55	3.5	3.		400	1.000	.175	.035	TO-39	2N3866	151-0446-00	A	H	4H	
500	25/25	40	15/50	50	60	3.5	3.	1V/100	400	1.000	.175	.035	TO-39	2N3866	151-0211-00	A	I	4H	
500	10/10	40	.35/10	15	40	4.5	4.	500/10	200	.625	.200	.125	TO-92	2N5769	151-0437-00	N	G-	4F	
500 MHz	25/50	25	10/5	100	100	3.5		1V/10		1.000	.175	.035	TO-39	MRF531	151-0756-00		J-		
600	2/10	40	.5/20	15	30	3.	1.7	400/10	50	.200	.877	.585	TO-72A	2N918	151-0109-00	N	H	4F	
600	6/2	70	10/1.5	80	80	4.	1.	250/10	100	.625	.200	.125	TO-92	MPSH05	151-0637-00	A	F-	1J	
600	6/2	90/270	6/2	25	30	4.	1.8	600/10	100	.350	.357	.125	TO-236	MMBC1321	151-0731-00	A	F+		Vbe Match
600	10/4	40	1/3	15	30	3.	1.7	400/10	50	.625	.200	.125	TO-92	MPS918	151-0198-00	A	E+	5B	6.0dB NF
600	10/4	40	1/3	15	30	3.	1.7	400/10	50	.625	.200	.125	TO-92	MPS918	151-0198-04				Taped & Reeled

TRANSISTORS (CONT)

SMALL SIGNAL, SILICON (IN TOTAL F_t ORDER)

SINGLE(NPN)

F_t MIN MHz	@ V_{ce}/I_c (V)(mA)	h_{FE} MIN/MAX	@ V_{ce}/I_c (V)(mA)	BREAKDOWN VOLTS V_{ceo}	V_{cbo}	V_{ebo}	C_{cb} pF	V_{ce} (SAT) Volts	I_c mA (MAX)	PWR AMB (W)	(°C/MW) θ_{JA}	θ_{JC}	† CASE STYLE	JEDEC OR VENDOR NO.	PART NUMBER	** ND	CC	†† RC	COMMENTS
600	10/4	100	1/3	10	30	3.	1.7	400/10	100	.625	.200	.125	TO-92	MPS918	151-0333-00	A	F-	5E	6dB NF
600	10/8	20/200	10/8	12	30	2.	1.7	200/10	50	.625	.200	.125	TO-92	2N3563	151-0225-00	A	E	4E	
650	8/20	50/120	1/10	15	40	4.5	4.	250/10	200	.350	.500	.150	TO-18	2N2369	151-0127-00	A	G-	5E	
700	5/50	20	5/50	16	36	4.	8.		400	2.000			W54	2N6256	151-0617-00	A	J+		RF Power
800	4/20	60/300	1/4	25	25	3.	.7	500/4	50	.625	.200	.125	TO-92B	MPSH10	151-0720-00	A	F-	3H	
800	5/25	30	5/25	25	55	4.	6.	200/100	400	1.000	.175	.035	TO-39	2N5943	151-0451-00	A	I-	4F	rb'Cc<15ps
800	10/3	40/170	6/1	20	35	3.	1.3		50	.200	.877	.585	TO-72A	2N918	151-0283-00	N	G+	4F	4.5dB NF
800	15/50	25/200	5/50	25	45	2.5	4.	1V/100	150	1.000		.030	SOT-89	BFQ-17	151-0715-00	A	I+		
900	6/5	25/250	1/3	20	35	3.	1.	400/10	50	.200	.877	.585	TO-72A	2N5179	151-0282-00	A	H-	4E	
900	6/5	40/200	1/5	12	20	2.5	1.	400/10	50	.350	.357	.125	TO-236	MMBT5179	151-0714-00	A	G+		
900	10/8	60/300	1/4	20	25	3.	.7	500/4	50	.625	.200	.125	TO-92B	MPSH10	151-0711-00	A	F-	5D	
900	10/8	20	10/8	15	30	3.	1.7	400/10	50	.625	.200	.125	TO-92	2N5770	151-0471-00	A	H		
900	10/8	60/300	1/4	20	25	3.	.7	500/4	50	.625	.200	.125	TO-92B	MPSH10	151-0711-02				Taped & keeled
1000	2/2	40	2/20	18	30	4.	1.	200/10	50	.200	.877	.585	TO-72A	2N2857	151-0441-00	A	H-	5E	
1000	2/10	55	2/25	14	30	4.	1.4	400/8	80	.625	.200	.125	TO-92	NE41632	151-0472-00	A	I-	5E	
1000	6/5	30	1/3	15	30	2.5	1.		40	.300			CHIP	2N2857	151-0751-00	A	H-		4.5dB NF
1000	6/5	25	1/3	8	15	2.	1.8		50	.200	.877	.585	TO-72A	2N2857	151-0138-00	N	I+		Use 151-0441-00
1000	5/10	30	10/20	15	30	4.	1.	150/20	100	.625	.200	.125	TO-92	FMT1061	151-0269-00	A	I	4E	
1000	10/3	100/275	6/1	25	45	4.5	.7		50	.200	.877	.585	TO-72A	2SC1260	151-0230-00	A	I+		4dB NF
1000	10/5	60	10/5	15	35	4.	.8	100/10	20	.500	.200	.125	MAC-T	2SC288C	151-0206-00	A	G	4G	rb'Cc<15ps
1000	10/8	20	10/8	12	30	2.	1.7	200/10	50	.625	.200	.125	TO-92	2N3563	151-0259-00	N	E-		Use 151-0427-00
1000	10/8	70/200	1/8	12	30	2.	1.7	200/10	50	.625	.200	.125	TO-92	2N3563	151-0427-00	A	F	5C	
1000	15/15	25/125	5/150	25	40	3.5	4.	1	150	.350	.357	.125	TO-236	A210	151-0329-00	A	K-		
1200	2/20	25/125	1/20	13	15	2.5	1.		25	.200	.877	.585	TO-72A	2N6304	151-0212-00	A	I	4C	
1200	6/5	100/300	6/5	30	40	3.	1.5	150/20	50	.625	.200	.125	TO-92	A5T3571	151-0402-00	A	I	4D	
1200	6/5	100/300	6/5	30	40	3.	1.5	300/20	50	.625	.200	.125	TO-92	A5T3571	151-0367-00	A	I-	5D	
1200	15/50	25/300	15/50	30	40	3.5	3.	300/100	400	1.000	.175	.035	TO-39	2N5109	151-0411-00	A	I+	4G	rb'Cc<20ps
1200	15/75	25	5/50	25	40	2.	3.5	750/100	150	1.000	.175	.035	TO-39	A210	151-0288-00	A	K-	3G	
1300	5/25	20	1/25	15	15		1.5		25	.200	.877	.585	TO-72		151-0300-00	N	K+		Use 151-0442-00
1300	10/10	75	1/10	12	20	4.5	2.5	300/30		.350	.500	.150	TO-18	2N3959	151-0205-00	N			Use 151-0193-00
1400	4/10	40	2/10	12	20	4.5	2.	300/30		.200	.877	.585	TO-72	2N3960	151-0193-00	A	K+		CURRENT MODE SW
1400	5/25	40	5/25	15	30	4.	1.2	200/10	50	.200	.877	.585	TO-72A	2N6304	151-0442-00	A	I		
1400	15/70	20/200	10/50	25	45	3.	3.		300	1.000	.175	.035	TO-39	2SC1252	151-0650-00	A	K+		2.7dB NF
1500	2/50	30	2/25	8	15	4.	4.	200/100	200	.500	.438	.088	TO-46	2N5836	151-0448-00	A	J+	4F	CURRENT MODE SW
1500	10/10	25/200	10/10	14	30	3.	.55		50	.290	.610	.120	μ-X (M100)	NE73435	151-0631-00	A	J+		3.5dB NF
1500	10/10	45	1/10	14	30	3.	1.		50	.350	.357	.125	TO-236	NE73433	151-0754-00	A	I+		
1500	20/80	25	10/80	22	35	3.5	4.5	500/100	250	5.000			144D04	MRF511	151-0474-01	A	L-		
1500	20/80	30	5/100	26	45	4.	2.5	700/100	250	1.400			CHIP	CD2357	151-0494-00	A	K+		SIMILAR TO TEK D156
1600	28/20	10	5/250	33	60	4.	15.		1A	.250	.500	.125	T90	MRF5175	151-0695-00	A	L+		
1600	2/30	30	1/10	8	15	3.	2.		100	.250	.500	.125	μT(μ43)	MMT3960A	151-0293-00	N	K-	3F	rb'Cc<15ps
1500	18/100	25	1/100	25	50	4.	3.	500/100	200	3.000			CHIP	CD3921	151-0709-00	N	M-		SIMILAR TO D156
1800	15/50	20/200	15/50	25	45	3.	3.		300				CHIP	NE7400	151-0661-00	N	L		SIMILAR TO D156
2000	2/10	40	2/50	10	20	3.8	1.5	200/25	100	.200	.877	.585	TO-72A	2N5841	151-0447-00	N	J+	4F	CURRENT MODE SW
2000	4/25	25	4/25	10	20	3.	1.		300	.200	.877	.585	TO-72A	2N5841	151-0298-00	N	L		rb'Cc<30ps
2000	5/10	30	1/10	8	15	3.	2.	200/10	100				CHIP	MMT3960	151-0380-00	A	K-		
2500	3/15	30/300	1/30	12	20	3.	1.5		50	.150			μT	V327	151-0295-00	A	N-	1J	2.4dB NF
2500	10/10	30	10/10	15	10	3.	.7		30	.200	.877	.585	TO-72A	2N5652	151-0330-00	A	N+		2.5dB NF
4000	8/10	30/300	8/10	11	25	3.	.6		50	.290	.610	.120	μX (M100)	NE57835	151-0689-00	A	L-		5.5dB NF
4500	10/14	25	10/14	15	20	2.	.75		25	.350	.357	.125	TO-236	BFR92	151-0636-00	A	J	3E	2.4dB NF
4500	10/20	30/250	10/20	12	25	3.	.6		70	.290	.610	.120	μX (M100)	NE02135	151-0630-00	A	J+	4G	4dB NF
4500	10/20	20/250	10/20	12	25	3.	1.		70	.700	.250	.070	μX (#320)	NE02103	151-0658-00	A	M+	3H	
4500	10/20	30	10/50	15	20	3.	1.5		100	.500	.200	.125	MAC-T	BFR96	151-0752-00	A	I+	5D	2dB NF
5000	5/30	25	5/30	12	15	3.	.7		35	.500	.200	.125	MAC-T	BFR91	151-0475-00	A	J+	3H	1.9dB NF
6500	10/10	50/250	8/7	12	25	1.5	.7		65	.290	.610	.120	μX (M100)	NE64535	151-0608-00	A	M+		1.4dB NF
8000	10/20	50	8/20	10	20	1.5	1.		80	.290	.610	.120	μX (M100)	NE21935	151-0609-00	A	L		3.5dB NF

†† RELIABILITY CODES

USAGE/YR	CODE
≥10	1
≥100	2
≥1 000	3
≥10 000	4
≥100 000	5
≥1 000 000	6
≥10 000 000	7

FAILURE FREQ	CODE		%/YR (median)
1/100 000	A	=	.001
1/50 000	B	=	.002
1/20 000	C	=	.005
1/10 000	D	=	.01
1/5 000	E	=	.02
1/2 000	F	=	.05
1/1 000	G	=	.1
1/500	H	=	.2
1/200	I	=	.5
1/100	J	=	1.0+

**** NEW DESIGN CODE**

A - Recommended
N - Not Recommended

For further explanation of this code, see page 9-27.

† FOR CASE DRAWINGS, SEE PAGES 9-2 THRU 9-8.

TRANSISTORS (CONT)

SMALL SIGNAL, SILICON (IN TOTAL F_t ORDER)

DUAL(NPN)

F_t MIN MHz	@ V_{ce}/I_c (V)(mA)	h_{FE} MIN/MAX	@V_{ce}/I_c (V)(mA)	BREAKDOWN VOLTS V_{ceo}	V_{cbo}	V_{ebo}	C_{cb} pF	V_{ce} (SAT) mV/mA	I_c mA (MAX)	PWR AMB (W)	(°C/MW) θ_{JA}	† CASE STYLE	JEDEC OR VENDOR NO.	PART NUMBER	** ND	CC	†† RC	COMMENTS
60	5/1	200/600	5/1	25	50	6.	3.	300/1	30	.500	.349	TO-78	IT120	151-0236-00	A	J+	4D	3dB NF MONOLITHIC
100	1/1	100	1/1	30	40	7.	6.		30	.500	.349	TO-78	2N2484	151-0308-00	A	K	3G	4.0nV/Hz NF
100	1/1	100	1/.1	35	40	8.	6.		30	.500	.349	TO-78	2N2484	151-0232-00	A	I	5F	
100	5/1	150	5/1	15	25	6.5	3.	800/5	20	.500	.349	TO-78	IT121	151-0353-00	A	J-	4E	4dB NF MONOLITHIC
127	5/10	120	10/5	50	50	8.	6.	1V/10	30	.500	.349	TO-78	2N2484	151-0104-00	A	J-		
200	10/1	50	10/1	30	50	5.	8.	300/10	500	.500	.349	TO-78	2N2222A	151-0176-00	A	J+		
250	10/50	45/180	5/1	30	60	5.	8.	400/150	500	.500	.349	TO-78	2N2222	151-0309-00	A	J+	3G	
600	10/4	30	.5/10	12	20	4.5	1.7	400/10	50	.500	.349	TO-78	2N918	151-0139-00	A	J+		
1000	5/10	100	5/10	14	30	4.	3.			.500	.349	TO-78	2N3959	151-0461-00	A	K+	4E	
1000	10/10	40	5/10	20	30	4.	1.	100/20	100	.500	.349	TO-78	2N2857	151-0267-00	A	K-	3F	
1200	2/20	25/150	5/15	15	30	2.5	1.		50	.500	.349	TO-78	A485	151-0268-00	A	K+	4F	3dB NF
1600	2.5/5	30	2/5	8	15	4.8	1.5	400/10	30	.500	.349	TO-78	SL360	151-0725-00	A	K-	4E	ULTRA MATCHED
		250	5/.1	40	40			100/20	20	.500	.349	TO-78	LM360	151-0619-00	A	K-		LOG AMP
NPN/PNP																		
200	20/20	75	10/10	30	40	5.	10.	400/150	500	.500	.349	TO-78	TD702	151-0361-00	A	I+	4F	NPN/PNP PLASTIC

6

†† CATALOG RELIABILITY CODES

USAGE/YR	CODE
≥10	1
≥100	2
≥1 000	3
≥10 000	4
≥100 000	5
≥1 000 000	6
≥10 000 000	7

FAILURE FREQ	CODE		%/YR (median)
1/100 000	A	=	.001
1/50 000	B	=	.002
1/20 000	C	=	.005
1/10 000	D	=	.01
1/5 000	E	=	.02
1/2 000	F	=	.05
1/1 000	G	=	.1
1/500	H	=	.2
1/200	I	=	.5
1/100	J	=	1.0+

For further explanation of this code, see page 9-27.

COST CODE

(CC COLUMN)

CODE	A	B	C	D	E	F	G	H	I	J	K	L	M	N	O
≈ VALUE with +	.75¢	2¢	3.75¢	6¢	10¢	18¢	35¢	60¢	$1	$2	$3.75	$6	$10	$18	$35+
≈ VALUE no suffix	.5¢	1.5¢	3¢	5¢	8¢	15¢	25¢	50¢	75¢	$1.50	$3	$5	$8	$15	$25
≈ VALUE with -	.2¢	1.25¢	2.5¢	4.25¢	7¢	13¢	22¢	40¢	65¢	$1.25	$2.50	$4.25	$7	$13	$22

NOTE: Costs may vary from order to order due to order quantities, vendor, etc.

† FOR CASE DRAWINGS, SEE PAGES 9-2 THRU 9-8.

TRANSISTORS (CONT)

SMALL SIGNAL, SILICON (IN TOTAL F_t ORDER)

SINGLE(PNP)

F_t MIN MHz	@ V_{ce}/I_c (V)(mA)	h_{FE} MIN/MAX	@ V_{ce}/I_c (V)(mA)	BREAKDOWN VOLTS V_{ceo}	V_{cbo}	V_{ebo}	C_{cb} pF	V_{ce} (SAT) Volts	I_c mA (MAX)	PWR AMB (W))	(°C/MW) θ_{JA}	θ_{JC}	† CASE STYLE	JEDEC OR VENDOR NO.	PART NUMBER	** ND	CC	†† RC	COMMENTS
15	10/10	30/120	10/50	300	350	6.	15.	2V/50	1A	1.000	.175	.035	TO-39	2N5416	151-0385-00	N	I	3F	Use 151-0280-00
30	10/1	40	10/10	175	175	6.	4.	500/10	500	.625	.200	.125	TO-92	MPSA93	151-0228-00	A	F+	4F	
30	10/10	50	5/5	250	250	4.	20.	5V/10	500	1.000	.175	.035	TO-39	2N4931	151-0280-00	A	I	4G	
40	5/.5	250/800	5/1	50	50	3.	4.	300/10	50	.625	.200	.125	TO-92	2N5087	151-0276-00	A	E-	5A	
40	5/.5	250/800	5/1	50	50	3.	4.	300/10	50	.625	.200	.125	TO-92	2N5087	151-0276-01				Taped & Reeled
40	5/.5	100/550	5/1	60	60	5.	6.	250/10	100	.625	.200	.125	TO-92	2N5086	151-0342-00	A	D+	5E	LOW NOISE AMP
40	20/10	40	10/10	400	400	5.	6.	800/20	500	.625	.200	.125	TO-92	MPSA92	151-0749-00	A	H+		Comp to 151-0750-00
50	5/.5	250/700	5/1	25	40	5.	6.	250/10	50	.625	.200	.125	TO-92	2N4250	151-0219-00	A	D+	5E	2dB NF
50	10/50	60	1/100	40	50	5.	30.	500/1A	2A	.750	.167	.050	TO-92+	92PU51A	151-0622-00	A	F-	4F	
50	20/10	40	10/10	300	300	5.	6.	800/20	500	.625	.200	.125	TO-92	MPSA92	151-0443-00	A	F	5F	
50	20/10	40	10/10	300	300	5.	6.	800/20	500	.625	.200	.125	TO-92	MPSA92	151-0443-03				Taped & Reeled
60	10/50	40	10/150	75	90	7.	30.	650/150	1A	1.000	.175	.035	TO-39	2N4036S	151-0208-00	A	H-	4G	
60	10/50	40/140	10/150	75	90	7.	30.	650/150	1A	1.000	.175	.035	TO-39	2N4036S	151-0208-02	A	H-	4E	
100	2/10	50	1/10	60	60	4.		250/100	500	.625	.200	.125	TO-92	MPSA55	151-0646-00	A	F-		
100	5/10	20K	5/100	30	30	8.	4.	1.5V/100	300	.625	.200	.125	TO-92	MPSA65	151-0435-00	A	F-	5D	
100	5/50	60/300	5/50	25	40	5.	12.	250/50	200	.625	.200	.125	TO-92	MPS3702	151-0641-00	A	E+	1J	
100	5/50	100/300	5/50	25	40	5.	12.	250/50	200	.625	.200	.125	TO-92	A5T2907	151-0164-00	A	I-	5C	
100	5/50	100/300	5/50	25	40	5.	12.	250/50	200	.625	.200	.125	TO-92	A5T2907	151-0164-01				Taped & Reeled
100	10/10	50/250	5/10	150	150	5.	6.	250/50	600	1.000	.175	.035	TO-39	2N5401	151-0406-00	A	H+	5F	
100	10/10	60/240	5/10	150	160	5.	6.	250/50	600	.625	.200	.125	TO-92	2N5401	151-0350-00	A	E+	5E	
100	10/10	60/240	5/10	150	160	5.	6.	250/50	600	.625	.200	.125	TO-92	2N5401	151-0350-03				Taped & Reeled
100	10/50	50	10/150	40	60	5.	15.	1.4V/150	700	1.000	.175	.035	TO-39	2N4890	151-0235-00	A	H	4F	rb'Cc<100 ps
100	10/50	50/250	10/150	40	60	5.	15.	1.4V/150	700	1.000	.175	.035	TO-39	2N4890S	151-0389-00	A	H		
150	5/2	200	1/1	80	80	5.	5.		100	.625	.200	.125	TO-92	2N5086	151-0453-00	A	E-	5E	
150	5/2	200	1/1	80	80	5.	5.		100	.625	.200	.125	TO-92	2N5086	150-0453-01				Taped & Reeled
150	10/20	40	10/10	120	120	4.5	6.	350/10	100	1.000	.175	.035	TO-39	2N3495	151-0214-00	N	H	3H	rb'Cc<30ps,
150	10/20	40	10/10	150	150	3.5	6.	600/10	300	1.000	.175	.035	TO-39	2N3495	151-0270-00	A	H	5F	
170	10/2	300/600	10/2	25	25	4.	3.5	500/25	100	.625	.200	.125	TO-92	MPS6523	151-0216-00	A	E-	5C	
170	10/2	300/600	10/2	25	25	4.	3.5	500/25	100	.625	.200	.125	TO-92	MPS6523	151-0216-04				Taped & Reeled
200	5/2	300	1/2	60	60	5.	4.		100	.625	.200	.125	TO-92	2N5087	151-0410-00	N	E-	5D	Use 151-0342-00
200	20/50	100/300	10/10	60	60	5.	8.	400/150	600	1.000	.175	.035	TO-39	2N2905A	151-0134-00	A	G-	5F	
200	20/50	100/300	10/10	60	60	5.	8.	400/50	600	.350	.500	.150	TO-18	2N2907A	151-0301-00	A	F	5E	
250	20/10	100/300	1/10	40	40	5.	4.5	400/50	200	.625	.200	.125	TO-92	2N3906	151-0188-00	A	D+	6D	4dB NF
250	20/10	100/300	1/10	40	40	5.	4.5	400/50	200	.625	.200	.125	TO-92	2N3906	151-0188-05				Taped & Reeled
250	20/10	80/300	1/1	40	40	5.	4.5	400/50	200	.350	.357	.125	TO-236	MMBT3906	151-0700-00	A	F-		
300	20/10	35/240	1/1	40	60	5.	4.	700/100	200	.350	.500	.150	TO-18	2N3251	151-0133-00	A	G	3G	
300	20/10	55/240	1/1	40	60	5.	4.	700/100	200	.350	.500	.150	TO-18	2N3251	151-0289-00	A	I-		
300	20/10	90/300	1/1	40	50	5.	6.	500/50	200	.350	.500	.150	TO-18	2N3251	151-0459-00	A	G-	4C	6dB NF
400	20/10	70	10/1.5	80	80	4.	1.	250/10	100	.625	.200	.125	TO-92	MPSH55	151-0640-00	A	F-		
500	5/10	30/120	.3/10	12	12	4.	3.5	200/10	80	.625	.200	.125	TO-92	MPS3640	151-0199-00	A	E	5D	
500	5/10	30/120	.3/10	12	12	4.	3.5	200/10	80	.625	.200	.125	TO-92	MPS3640	151-0199-05				Taped & Reeled
500	15/50	25	5/50	40	60	4.	4.		400	1.000	.175	.035	TO-39	2N5160	151-0285-00	A	K	4H	
600	4/20	40	4/20	12	15	4.	2.5	300/10	50	.200	.877	.585	TO-72A	2N4260	151-0167-00	N	L+		Use 151-0434-00
600	20/10	100/300	1/10	40	40	5.	4.5	300/50	200	.625	.200	.125	TO-92	2N3906	151-0220-00	N	E	6E	
600	20/10	100/300	1/10	40	40	5.	4.5	300/50	200	.625	.200	.125	TO-92	2N3906	151-0220-03	A	E-	5D	6dB NF rb'Cc<50ps
600	10/5	60	10/5	20	20	3.	.85	500/5	50	.350	.357	.125	TO-236	MMBTH81	151-0663-00	A	G		rb'Cc<30ps
650	2/7	25	2/7	12	15	4.	2.3	300/10	50	.200	.877	.585	TO-72A	2N4260	151-0142-00	N	J+		Use 151-0434-00
700	10/10	30	.3/10	12	12	4.5	3.	150/10	50	.625	.200	.125	TO-92	PN4258	151-0327-00	A	G-		
700	10/10	30	.3/10	12	12	4.5	3.	150/10	50	.350	.500	.150	TO-18	PN4258	151-0458-00	A	G+		
700	10/10	60	.3/10	12	12	4.5	3.	150/10	50	.625	.200	.125	TO-92	PN4258	151-0325-00	N	F+	5E	Use 151-0221-00
750	4/5	60/300	1/20	25	25	3.	.85	500/5	60	.625	.200	.125	TO-92	MPSH81	151-0719-00	A	F	3H	rbCc<15ps
800	10/10	60/300	1/5	15	20	3.	.85	500/5	60	.625	.200	.125	TO-92B	MPSH81	151-0712-00	A	F	6B	rb'Cc<10ps
800	10/10	60/300	1/5	15	20	3.	.85	500/5	60	.625	.200	.125	TO-92B	MPSH81	151-0712-02				Taped & Reeled
900	10/10	30/120	.3/10	12	12	4.5	3.	150/10	50	.625	.200	.125	TO-92	PN4258	151-0221-00	P	E-	6D	
900	10/10	30/120	.3/10	12	12	4.5	3.	150/10	50	.625	.200	.125	TO-92	PN4258	151-0221-08				Taped & Reeled
1000	2/5	80	1/20	20	20	3.	.85	500/5	50	.625	.200	.125	TO-92B	MMSH81	151-0438-00	N	G	5D	Use 151-0712-00
1200	5/150	30	5/25	35	35	3.5	5.		500	1.000	.175	.035	TO-39	2N5583	151-0450-00	A	J	4F	rb'Cc<10ps
1500	10/10	20/150	1/10	11.5	15	4.	2.5	350/10	100	.625	.200	.125	TO-92	A5T4260	151-0369-00	A	I	5B	rb'Cc<50ps
1500	10/10	20/150	1/10	11.5	15	4.	2.5	350/10	100	.625	.200	.125	TO-92	A5T4260	151-0369-03				Taped & Reeled
1600	10/10	30/150	1/10	12	15	3.	2.5	350/10	50	.350	.357	.125	TO-236	MMBT4260	151-0713-00	A	G		
2000	10/10	30/150	1/10	12	15	4.	2.5	350/10	80	.625	.200	.125	TO-92	A5T4261	151-0271-00	A	I	5C	
2000	10/10	30/150	1/10	12	15	4.	2.5	350/10	30	.200	.877	.585	TO-72A	2N4261	151-0434-00	A	H+	5D	
2000	10/10	20	2/30	12	15	4.5	3.	400/10	30	.250	.500	.125	μT(μ43)	2N4261	151-0294-00	N	F-		
2000	10/15	30/120	1/10	15	15	4.5	2.5	250/10	30	.200	.877	.585	TO-72A	2N4261	151-0202-00	N	I	4G	Use 151-0434-00
4000	2/15	15	2/15	10	10	4.5	1.5		30	.250	.500	.125	μT(μ43)	MM4049	151-0362-00	N	K	4E	
4000	2/15	40	2/10	10	15	4.5	1.2		30				CHIP	MM4049	151-0379-00	A	K-		
4000	2/15	20/80	2/10	10	15	4.5	1.2		30	.200	.877	.585	TO-72A	MM4049	151-0296-00	A	L	3H	

TRANSISTORS (CONT)

SMALL SIGNAL, SILICON (IN TOTAL F_t ORDER)

DUAL(PNP)

F_t MIN MHz	@ V_{ce}/I_c (V)(mA)	h_{FE} MIN/MAX	@V_{ce}/I_c (V)(mA)	BREAKDOWN VOLTS V_{ceo}	V_{cbo}	V_{ebo}	C_{cb} pF	V_{ce} (SAT) mV/mA	I_c mA (MAX)	PWR AMB (W)	(°C/MW) θ_{JA}	† CASE STYLE	JEDEC OR VENDOR NO.	PART NUMBER	** ND	CC	†† RC	COMMENTS
100	5/1	40	5/5	25	25	6.	3.	900/5		.500	.349	TO-78	ITS1200	151-0354-00	A	I+	5F	MONOLITHIC
100	5/1	150	5/1	60	60	5.	4.	250/1		.500	.349	TO-78	2N3808	151-0178-00	A	K+		
100	5/1	150	5/1	45	45	5.	6.	250/1	50	.500	.349	TO-78	2N3808	151-0261-00	A	I+	4E	
100	5/1	150	5/1	45	45	5.	6.	250/1	50	.500	.349	TO-78	2N3808	151-0261-01	A	J-	4E	1.5dB NF 1K
200	20/50	135	5/1	45	45	5.	8.	250/50		.500	.349	TO-78	2N2907	151-0307-00	A	K		
400	5/10	30	5/10	10	10	4.5	3.	400/10	50	.500	.349	TO-78	2N4258	151-0467-00	N	K-		
2000	10/15	30/120	1/10	15	15	4.5	2.5	1/30		.500	.349	TO-78	2N4261	151-0272-00	A	L-	3E	

6

†† RELIABILITY CODES

USAGE/YR	CODE
≥10	1
≥100	2
≥1 000	3
≥10 000	4
≥100 000	5
≥1 000 000	6
≥10 000 000	7

FAILURE FREQ	CODE		%/YR (median)
1/100 000	A	=	.001
1/50 000	B	=	.002
1/20 000	C	=	.006
1/10 000	D	=	.01
1/5 000	E	=	.02
1/2 000	F	=	.05
1/1 000	G	=	.1
1/500	H	=	.2
1/200	I	=	.5
1/100	J	=	1.0+

For further explanation of this code, see page 9-27.

COST CODE

(CC COLUMN)

CODE	A	B	C	D	E	F	G	H	I	J	K	L	M	N	O
≈ VALUE with +	.75¢	2¢	3.75¢	6¢	10¢	18¢	35¢	60¢	$1	$2	$3.75	$6	$10	$18	$35+
≈ VALUE no suffix	.5¢	1.5¢	3¢	5¢	8¢	15¢	25¢	50¢	75¢	$1.50	$3	$5	$8	$15	$25
≈ VALUE with -	.2¢	1.25¢	2.5¢	4.25¢	7¢	13¢	22¢	40¢	65¢	$1.25	$2.50	$4.25	$7	$13	$22

NOTE: Costs may vary from order to order due to order quantities, vendor, etc.

† FOR CASE DRAWINGS, SEE PAGES 9-2 THRU 9-8.

TRANSISTORS (CONT)

SMALL SIGNAL, SILICON (FOR REFERENCE ONLY)

DO NOT USE IN NEW DESIGN

6

PART NUMBER	JEDEC OR VENDOR NO.	§§ ST	OTHER	CASE STYLE	F_t MIN @I_c MHz	A	C_{ob} @V_r C_{cb} pF	V	h_{FE} @ V_{CE} & I_c MIN	MAX	V	A	BREAKDOWN VOLTS cbo	ceo	ebo	I_C (MAX) AMPS	PWR AMB (W)
151-0003-00	2N407	NP	PNP Germanium	TO-40					65		1	.050	20	18	2.5	.070	.150
151-0004-00	2N214	EN	NPN Germanium	TO-22	.010	.001	28		50	100	1.5	.035	40	25	10	.100	.180
151-0005-00	2N212	NP	NPN Germanium	TO-22	4.	.001	15	6	10	30	6	.001	18	18	5		.050
151-0007-00	2N270	NP	PNP Germanium	TO-7	.100				50	140	1	.150	25	cex 25	12	.150	.250
151-0008-00	2N544	NP	PNP Germanium	TO-33	30		3		97		12	.001	24		1	.010	.080
151-0010-00	2N404	NP	PNP Germanium	TO-5	4	.001	20	6	24		.2	.024	25	cex 24	12	.100	.150
151-0011-00	CT1200	NP	NPN Germanium	TO-9	1		11		35	5		.001	90		20		.120
151-0015-00	2N1516	NP	PNP Germanium	TO-7	70	.001	3	6	20		6	.001	20	cer 32	.5	.010	.083
151-0016-00	2N3137 Fmly	DL	NPN Germanium	TO-9	3	.001	20	10	20		.2	.020	25	cev 24	20	.200	.120
151-0017-00	2N373	DL	PNP Germanium	TO-7	30	.001	1.9	6	60		12	.001	25		.5	.010	.080
151-0019-00	2N591	NP	PNP Germanium	TO-1	.700	.002			70		12	.002		cex 32		.020	.050
151-0020-00	2N447A	NP	NPN Germanium	TO-5	9		16		125		4.5	.001	15		10		.150
151-0021-00	2N597	NP	PNP Germanium	TO-9	3	.003	20		40		1	.100	45	ces 40	45	.500	.250
151-0022-00	2N599	DL	PNP Germanium	TO-9	10	.003	20	10	70		1	.200	30	ces 20	20	.500	.250
151-0023-00	2N499	DL	PNP Germanium	TO-1	120	.002	2.5	10					30	18	.5	.050	.030
151-0024-00	2N588	DL	PNP Germanium	TO-1	100	.003							15	ces 15	.5	.050	.030
151-0025-00	2N2375	NP	PNP Germanium	TO-25	.400	.010	140		35	105	.6	.100	30	cex 40		.150	.250
151-0026-00	2N1102	NP	NPN Germanium	TO-22	.101	.001			30	60	1.5	.035	40	25	10	.100	.180
151-0027-00	2N700 Fmly	LS	PNP Germanium	TO-17	500	.002	1.5	6	15	30	5	.005	cbs 25	20	.2	.050	.075
151-0028-00	2N204	EN	PNP Germanium		1.2		40		80		5	.001	36		12	.100	.100
151-0029-00	2N478	NP	NPN Silicon	TO-5	8	.001	20	6	40	100	6	.001	15	15	2		.200
151-0030-00	2N647	NP	NPN Germanium	TO-1	2	.002			50	150	1	.050	25	25	12	.050	.100
151-0031-00	2N1517	CS	PNP Germanium	TO-7	70	.001	6		20		6	.001	20	cer 32	.5	.010	.083
151-0032-00	2N695 Fmly	NP	PNP Germanium	TO-17	250	.002	5	6	25		.3	.010	18	15	3	.050	.075
151-0033-00	2N169A	OB	NPN Germanium	OV-5	9	.001	6	5	34	200	1	.001	25	cer 25	5	.025	.075
151-0035-00	2N1592	OB	NPN Silicon	TO-5	7	.001			70	210	5	.001	15			.025	.150
151-0036-00	2N601	OB	PNP Germanium	TO-31	10	.003	20	10	100		1	.100	30		20	.500	
151-0037-00	2N675	NP	PNP Germanium	TO-26	.700				100		1.5	1.	75	75	70	2.	1.
151-0038-00	2N636	OB	NPN Germanium	TO-9	15	.001	20		100	300	1	.010	25	cer 15	25	.300	.150
151-0039-00	2N1381	CR	PNP Germanium	TO-5	2	.001			27	330	1	.050	25	cer 25	15	.200	
151-0040-00	2N1302	CS	NPN Germanium	TO-5	3	.001	20	5	20		1	.010	25	25	25	.300	.150
151-0041-00	2N1303	LR	PNP Germanium	TO-5	3	.001	20	5	20		1	.010	30	25	25	.300	.150
151-0042-00	2N1378	LR	PNP Germanium	TO-5	3	.001			95	300	1	.050	12	12	7	.200	.250
151-0044-00	2N705	CS	PNP Germanium	TO-18	300	.010	5	10	25		.3	.010	15	ces 15	3.5	.050	.150
151-0045-00	2N1637S	CS	PNP Germanium	TO-7	45	.001	2.9		80		12	.001	34		1.5	.010	.080
151-0047-00	2N1631	OB	PNP Germanium	TO-40	45	.001	3.1	6	80		12	.001	34		.5	.010	.080
151-0048-00	2N1632	OB	PNP Germanium	TO-1	45	.001	3.1	6	40	170	12	.001	34		.5	.010	.080
151-0049-00	2N636	NP	PNP Germanium	TO-9	17		12		35		.750	.200	20	15	15	.300	.150
151-0050-00	2N1478	DL	PNP Germanium	TO-9	3	.003	20	10	40		1	.100	30	ces 20	20	.500	.250
151-0051-00	2N394	NP	PNP Germanium	TO-5	4	.001	20	5	20		1	.010	30	10	20	.200	.150
151-0052-00	2N636	NP	PNP Germanium	TO-9	17		12		35		.750	.200	20	15	15	.300	.150
151-0053-00	2N469A	OB	PNP Germanium	X-46	1	.001	30	5					20	cer 15	10		.050
151-0054-00	2N1754 Fmly	LR	PNP Germanium	TO-9	75		3	6	50	200	.250	.010	25	20	2	.100	.050
151-0055-00	2N398A	CS	PNP Germanium	TO-5	1	.001			20		.350	.005	105	ces 105	50	.200	.150
151-0056-00	T1483	OB	NPN Silicon (AS)	TO-5	.400	.050	35	10	20		10	.150	40	20	5	.500	.600
151-0058-00	RT5204	CR	NPN Silicon (AS)	TO-5	40	.050	25	10	40	120	10	.010	30	cer 30	5		.600
151-0059-00	S3430	NP	NPN Silicon (HV)	TO-5	60		8	10	3		10	.002	120	cer 120	.6	.040	.750
151-0061-00	SS2590	DL	PNP Germanium	TO-18	280	.010	4	3	20	250	.5	.010	15	8	2	.050	.050
151-0062-00	GA1392	NP	NPN Germanium	TO-5	70	.010			30		10	.010	60	ces 60	3	.050	.150
151-0063-00	2N2207	NP	PNP Germanium	TO-7	125	.010	2.3	6	36	370	6	.010	70	70	.5	.050	.200

TRANSISTOR GROUPS

SS	Saturated Switches
AS	Amplifier Switch
HB	High Beta
HV	High Voltage
HSA	High Speed Amplifier
VHF	Very High Frequency
MFLB	Medium Frequency - Low Beta
DAR	Darlington
DUAL	Duals
G	Germanium

TRANSISTORS (CONT)

SMALL SIGNAL, SILICON (FOR REFERENCE ONLY)

DO NOT USE IN NEW DESIGN

PART NUMBER	JEDEC OR VENDOR NO.	§§ ST	OTHER	CASE STYLE	F_t MIN	@I_c	C_{ob} @ V_r C_{cb}		h_{FE} @ V_{CE} & I_c				BREAKDOWN VOLTS			I_C (MAX) AMPS	PWR AMB (W)
					MHz	A	pF	V	MIN	MAX	V	A	cbo	ceo	ebo		
151-0064-00	2N650	NP	PNP Germanium	TO-5	.750	.001	25	6	33		1	.010	45	cer 30	30	.500	.200
151-0065-00	2N1991	OB	PNP Silicon (AS)	TO-5	40	.050	45	10	15		10	.030	30	20	5		.600
151-0067-00	2N1143	NP	PNP Germanium	TO-5	250	.010	1.5	10	10		10	.010	25		.5	.100	.300
151-0068-00	2N636A	NP	PNP Germanium	TO-9	17		12		35		.750	.200	20	15	15	.300	.150
151-0069-00	2N1304 Fmly	CS	NPN Silicon (AS)	TO-5	5	.001	20	5	40	200	1	.010	25	25	25	.300	.150
151-0070-00	2N1377	NP	PNP Germanium	TO-5	2	.001			67	165	1	.050	45	45	25	.200	.250
151-0071-00	2N1305	LR	PNP Germanium	TO-5	5	.001	20	5	40	200	1	.010	30	cex 20	25	.300	.150
151-0072-00	2N1308 Fmly	LS	NPN Silicon (AS)	TO-5	10	.001	20	5	80		1	.010	25	25	25	.300	.150
151-0073-00	T1943	NP	PNP Germanium	TO-9	6.8	.003	20	10	150	450	1	.100	35	ces 30	35	.500	.250
151-0074-00	2N336	DL	NPN Silicon (AS)	TO-5	2	.001	30	5	76	333	5	.001	45	25	1	.025	.150
151-0075-00	2N769	NP	PNP Germanium	TO-18	100	.020	3	5	25		.5	.020	12	7	2	.100	.035
151-0076-00	2N2048	CS	PNP Germanium	TO-9	150	.006	3	6	50	300	.5	.010	20	15	2	.100	.150
151-0077-00	2N797	NP	NPN Germanium	TO-18	500	.010	4	5	20	150	.350	.010	15	12	12	.100	.300
151-0078-00	2N1997	OB	PNP Germanium	TO-5	3	.003	20	5	40	200	1	.100	45	cex 40	45	.500	.250
151-0080-00	2N706	CR	NPN Silicon (AS)	TO-18	200	.010	6		20		1	.010	25	20	3	.200	.300
151-0081-00	2N1749	NP	PNP Germanium	TO-9													
151-0083-00	2N964	LR	PNP Silicon	TO-18													
151-0084-00	2N1225	LS	PNP Germanium	TO-33													
151-0085-00	2N741 Fmly	CS	PNP Germanium	TO-18													
151-0086-00	2N955	NP	NPN Germanium	TO-18													
151-0087-00	2N2905	CR	PNP Silicon (AS)	TO-18	200	.050	8	10	100	300	10	.050	60	40	5		
151-0088-00	2N700	LS	PNP Germanium	TO-17													
151-0089-00	2N962	NP	PNP Germanium	TO-18	300	.020	4	10	20		.3	.010	12	7	1.2	.100	.150
151-0090-00	2N2218	NP	NPN Silicon (AS)	TO-5	250	.020	8	10	40	120	10	.150	60	30	5		.800
151-0091-00	2N1226	OB	PNP Germanium	TO-33	30	.0015	3	12	20	175	12	.0015	60	cex 60	.5	.010	.120
151-0092-00	2N711A	DL	PNP Germanium	TO-18	150	.010	6	5	25	150	.5	.010	15	7	1.5	.001	.150
151-0093-00	2N2043	NP	PNP Germanium	TO-5	.750	.001	25	6	45	180	6	.001	105	105	75	.200	.200
151-0094-00	2N835	NP	NPN Silicon (AS)	TO-18	300	.010	4	10	20		1	.010	25	20	3	.200	.300
151-0095-00	NS1110	NP	NPN Silicon	TO-18									100	cex 100			.150
151-0097-00	2N955	NP	NPN Germanium	TO-18	1000	.020	6	5	30		.5	.030	12	cer 9	2	.100	.150
151-0098-00	T1484	OB	NPN Silicon (AS)	TO-5	40	.050	35	10	40	120	10	.150	40	20	5	.500	.600
151-0099-00	2N2219 Fmly	NP	NPN Silicon (HB)	TO-5	250	.020	8	10	100	300	10	.150	60	30	5		.800
151-0100-00	2N2191	CS	PNP Germanium	TO-58	102	.0015	2.5	9	60	180	9	.0015	60	ces 60	2	.030	.125
151-0105-00	SM2335	OB															
151-0106-00	2N2375	OB	PNP Germanium	TO-5	9	.002	20	6	35	110	.6	.100	35	35	35	.500	.250
151-0107-00	2N967	LS	PNP Germanium	TO-18	300	.020	5	5	40		.3	.010	12	7	2		.150
151-0115-00	2N1142	EN		TO-5	320	.010	1.4	10	10		10	.010	30		.7	.100	
151-0116-00	2N1384	DL	PNP Germanium	TO-11	20	.010			20		.5	.200	30	30	1	.500	.240
151-0119-00	2N1131	NP	PNP Silicon (AS)	TO-5	50	.050	45	10	15		10	.005	50	35	5	.600	.600
151-0120-00	2N2475 Fmly	NP	NPN Silicon (MFLB)	TO-18	600	.020	3	5	30		.4	.020	30	8	2		.300
151-0122-00	SZ50601	CS	PNP Silicon (AS)	TO-18	100	.010	9	10	10		1	.0001	30	20	5		.360
151-0123-00	2N976	NP	PNP Germanium	TO-18	600	.007	3	5	30		.5	.020	15	10	2	.100	.100
151-0129-00	2N2207	DL	PNP Germanium	TO-7	140	.010	13	30	36	370	6	.010	50	50		.030	.200
151-0130-00	2N1195 Fmly	DL	PNP Germanium	TO-5	400	.010	1.5	10	10		10	.010	30		1	.040	.225
151-0131-00	2N964 Fmly	LR	PNP Germanium	TO-18	300	.020	4	10	40		.3	.010	15	15	2.5	.100	.150
151-0135-00	2N2635	NP	PNP Germanium	TO-18	150	.030	5	5	45	300	1	.050	30	15	2.5	.100	.150
151-0143-00	2N2996	DL	PNP Germanium	TO-72	400	.004	3	6	25		6	.004	15	10	.3	.050	.075
151-0144-00	2N1743	OB	PNP Germanium	TO-9	30	.001			10		10	.002	20	ces 20	.5	.050	.060
151-0145-00	2N1744	OB	PNP Germanium	TO-9	30	.001			10		10	.002	20	ces 20	.5	.050	.060
151-0146-00	2N1745	CS	PNP Germanium	TO-9	200	.001	1.5		10		10	.002	20	ces 20	.5	.050	.060
151-0147-00	2N1747	OB	PNP Germanium	TO-9	200	.001	1.8		10		6	.001	20	ces 20	.5	.050	.060
151-0151-00	2N929 Fmly	NP	NPN Silicon (AS)	TO-18	50	.001	8	5	100		10	.0005	60	40	5	.030	.300
151-0152-00	2N696	NP	NPN Silicon	TO-5	64		35		20		10	.150	60	cer 40	5		.600
151-0153-00	2N2923 Fmly	OT	NPN Silicon (HB)	TO-98	120	.004	7	10	90	180	5	.002	18	18	5	.100	.200
151-0154-00	2N2924 Fmly	CS	NPN Silicon (HB)	TO-98	120	.005	7	10	150	300	5	.002	18	18	5	.100	.200
151-0155-00	2N2925 Fmly	CR	NPN Silicon (HB)	TO-98	120	.005	7	10	150	470	5	.002	18	18	5	.100	.200
151-0157-00	40232	OT	NPN Silicon (HB)	TO-104	60	.001	22	6	90	300	10	.002	18	18	5	.100	.500
151-0159-00	2N3605 Fmly	NP	NPN Silicon (SS)	TO-92	300	.010	6	10	30		1	.010	18	14	5	.200	.200
151-0160-00	2N3137 Fmly	LR	NPN Silicon (MFLB)	TO-39	700	.005	3.5						40	15	4		
151-0161-00	2N3284	CS	PNP Germanium	TO-72	250	.003	1.5	10	10	200	10	.003	25	ces 25	.5	.050	.100
151-0162-00	2N3324	LS	PNP Germanium	TO-18	200	.003	3	10	30	200	10	.003	35	ces 35	3	.100	.150
151-0166-00	2N2923	CS	NPN Silicon (HB)	TO-98	200	.005	12	10	115	180	5	.002	25		5	.100	.200
151-0171-00	C444	NP	NPN Silicon (MFLB)	TO-18	350		3		80		5	.005	50	35	3		.300

TRANSISTORS (CONT)

SMALL SIGNAL, SILICON (FOR REFERENCE ONLY)

DO NOT USE IN NEW DESIGN

6

PART NUMBER	JEDEC OR VENDOR NO.	§§ ST	OTHER	CASE STYLE	F_t MIN	@I_c	C_{ob} @ V_r C_{cb}		h_{FE} @		V_{CE} &	I_c	BREAKDOWN VOLTS			I_C (MAX)	PWR AMB
					MHz	A	pF	V	MIN	MAX	V	A	cbo	ceo	ebo	AMPS	(W)
151-0173-00	2N3478	OT	NPN Silicon (MFLB)	TO-104	900	.002	2	8	25	150	8	.002	30	15	2	.050	.200
151-0174-00	2N3403	CR	NPN Silicon (HB)	TO-98	180	20mA			180		4.5	20mA	25	25	5	.500	.550
151-0175-00	2N3662	OT	NPN Silicon (MFLB)	TO-98	700	.005	1.7	10	20		10	.008	18	12	3	.025	.200
151-0177-00	2N916	CS	NPN Silicon (MFLB)	TO-18	300	.010	6	5	50	200	1	.010	45	25	5		.360
151-0179-00	2N3877A	NP	NPN Silicon (AS)	TO-98	160	.010			20		4.5	.002	85	85	4	.050	.200
151-0180-00	40235	NP	NPN Silicon (HSA)	TO-104	1000	.003	.7	10	40	170	6	.001	45	cev 45	4.5	.050	.180
151-0181-00	40242	LR	NPN Silicon (HSA)	TO-104	900	.003	650	8	40	170	6	.001	35	cev 35	5	.050	.180
151-0182-00	2N1307	CS	PNP Germanium	TO-5	10	.001	20	5	60	300	1	.010	30	15	25	.300	.150
151-0184-00	SM7744	CS	NPN Silicon (AS)	TO-18	250	.001	2.5	10	50		1	.0001	60	60	5	.200	.200
151-0185-00	2N2929 Fmly	DL	PNP Germanium	TO-5	800	.010	2.5	10	20	100	10	.010	25	15	.75	.100	.300
151-0187-00	2N2207 Fmly	DL	PNP Germanium	TO-7	125		2.3		180		2	.010	70	50	.5	.050	.260
151-0189-00	2N3959 Fmly	NP		TO-18													
151-0194-00	2N3959	DL	NPN Silicon (HSA)	TO-92	1400	.010	2	4	40		2	.010	20	12	4.5		.310
151-0197-00	MPS3640	DL	PNP Silicon (MFLB)	TO-92	500	.010	3.5	5	30	120	.3	.010	12	12	4		.200
151-0213-00	2N4251 Fmly	LR	NPN Silicon (HSA)	TO-46	1300	.010	2	10	100	300	5	.010	15	9	4.5	.150	.250
151-0215-00	2N4080 Fmly	DL	PNP Silicon (HSA)	TO-72	1000	.004	1.7	10	20		1	.003	20	15	3		.200
151-0222-00	2N4251 Fmly	NP	NPN Silicon (HSA)	TO-46	1000	.080	2	10	100	300	5	.010	15	10	4.5	.150	.250
151-0231-00	2SC756	CS	NPN Silicon (HV)	TO-5	35	.050	60		50		2	.010	130	100	6	4.	
151-0237-00	SKA1060	DL	PNP Silicon (AS)	TO-92	250	.010	7	5	100	300	1	.010	40	40	5	.200	.300
151-0238-00	2N1302 Fmly	CS	NPN Germanium	TO-5	3	.001	20	5	20		1	.010	35	cer 25	25	.300	.100
151-0249-00	CS29015	NP	NPN Silicon (AS)		100	.001	6	1	100		1	.0001	40	35	7	.030	.150
151-0253-00	40327-17	CR	NPN Silicon (HV)	TO-5					40	250	10	20				1.	
151-0277-00	2N3933 Fmly	OT	NPN Silicon (MFLB)	TO-72	830				75				35		3	.500	
151-0284-00	2N1637	CS	PNP Germanium	TO-1	45	.001	2.9		80		12	.001	34		1.5	.010	.080
151-0310-02	2N2219A	DL	NPN Silicon (MFLB)	TO-5m	300	.020	8	10	50		10	.001	75	50	6	.800	.800
151-0320-00	MPS6518	CS	PNP Silicon (MFLB)	TO-92	420	.010	4	10	90		1	.010	30	30	4		.300
151-0321-00		DL	NPN Silicon (AS)	TO-71	100	.001	6	1	100		1	.0001	50	50	6	.030	.200
151-0322-00	2N4890 Fmly	OT	PNP Silicon (AS)	TO-39	100	.050	15	10	25		2.5	.150	70	70	5	.700	1.
151-0328-00	GET2925	DL	NPN Silicon (AS)	X-55	120	.004	7	10	235	470	5	.002	25	25	5	.100	.300
151-0338-00	2N3553	CS	NPN Silicon (MFLB)	TO-39	350	.125	12	30		200	5	.125	65	20	4	1.	1.
151-0344-00	SMCM321	LR	NPN Silicon (AS)	μ-86	60	.0005	6	5	175		5	.0001	40	40	6	.050	.200
151-0345-00	SMT1501	NP	PNP Silicon (VHF)	μ-43	4000	.015	1.2	2	20		2	.015		10			.200
151-0348-00																	
151-0351-00	KDC5521	DL	NPN Silicon (HSA)	CHIP	1800	.010	.7	15	30		10	.008	30	12	2.5		
151-0381-00	2N2605	OB	PNP Silicon (AS)	TO-46	100		4		150		5	.001	60	45	6		.400
151-0382-00	2N3013	OB	NPN Silicon (MFLB)	TO-52	350		5		30	120	.4	.030	40	15	5	.200	.360
151-0383-00	2N3251A	OB	PNP Silicon (AS)	TO-18	300		6		100	300	1	.010	60	60	5	.200	.360
151-0384-00	2N3569	OB	NPN Silicon (AS)	TO-105	60		20		40		1	.150	80	40	5	.500	.300
151-0388-00	TIP30	OB		TO-18													
151-0392-00	SE4002	OB	NPN Silicon (HB)	R-124	60		4		400		5	.001	30	25	6		.200
151-0393-00	2N3646	NP	NPN Silicon (MFLB)	R-110	350		5		30		.4	.030	40	15	5	.200	.200
151-0395-00	2N5139	OB	PNP Silicon (MFLB)	TO-106	300		5		40		10	.001	20	20	5	.100	.200
151-0396-00	2N4916	OB	PNP Silicon (MFLB)	R-124	400		4.5		60		1	.001	30	30	5	.100	.200
151-0397-00	2N3638	OB	PNP Silicon (AS)	R-110A	100		20		25		10	.010	25	25	4	.500	.300
151-0398-00	2N3829	OB	PNP Silicon (MFLB)	TO-52	350		6		30		.4	.030	35	35	5	.200	.360
151-0408-00	D075A	NP	Tek Md Silicon	CHIP					40		4	.120	50	50			
151-0409-00	D078B	NP	Tek Md Silicon	CHIP			.8	6	50		5	.025	15	8			
151-0416-00	D103	NP	NPN Silicon (VHF)		2000				40		4	.035		10			
151-0417-00	S21766	LS	PNP Silicon (AS)	TO-106	400	.010	4.5	5	80		1	.001	40	40	5	.100	.200
151-0430-00	D102	NP	Tek Md Silicon	CHIP					40		5	.150	32	32			
151-0431-00	SKA1103	NP	PNP Silicon (HSA)	μ-43N	1500	.005	3	3	40	150	2	.010	15	12	4.5	.050	
151-0452-00	TRC0129 Fmly	LR	NPN Silicon (MFLB)	TO-72	500	.010	.3		70		5	.010	55	45	4.	.050	
151-0474-00	MRF511	NP	NPN Silicon (HSA)	MRF511	1500	.080	3.2	20	25	200	10	.080	35	25	3.5		
151-0605-00	SMX-5032	DL	NPN Silicon (HSA)	Die Fm													
151-0626-00	NE021073	NP	NPN Silicon (VHF)														
151-0638-00	2N3854A	CS	NPN Silicon	TO-92													
151-0653-00	2N6534	DL	PNP Silicon (AS)	TO-18	20				100		3	8		80	5		
151-0655-00	2N3725	CR	NPN Silicon (AS)	TO-39	250	.050	10	10	60	150	1	100	80	50	6	1.	
151-0664-00	MPS3640	DL	PNP Silicon (SS)	TO-236	500	.010	3.5	5	30	120	.3	10	12	12	4		
151-0682-00		DL	PNP Silicon (MFLB)														
151-0705-00	2N918	DL	NPN Silicon (MFLB)	TO-236	600	.040	1.7	10	20		1	3	30	15	3	.050	

TRANSISTOR GROUPS

SS	Saturated Switches	VHF	Very High Frequency
AS	Amplifier Switch	MFLB	Medium Frequency - Low Beta
HB	High Beta	DAR	Darlington
HV	High Voltage	DUAL	Duals
HSA	High Speed Amplifier	G	Germanium

TRANSISTORS (CONT)

POWER, SILICON (NPN - PNP)

I_C (A) MAX	BV_{ceo} BV_{cbo}† (V)	PWR @ T_j= 25°C W	h_{FE} @ I_C (A) (††DARLINGTON)	V_{CE} (sat)	f_t MIN (MHz)	°C/W θ_{JA}	°C/W θ_{JC}	Δ SOA	† CASE STYLE	NPN JEDEC OR MFR. NO.	NPN ** ND	NPN PART NUMBER	NPN CC	NPN †† RC	PNP JEDEC OR MFG. NO.	PNP ** ND	PNP PART NUMBER	PNP CC	PNP †† RC
.5	45.	6.	40k††	.2	1.5	75.		20.	4	TO-202A	D40C5 Fmly	A	151-0331-00	G	4I				
.5	300.	20.	30	.05		10.		6.25	3	TO-126	MJE340 Fmly	A	151-0311-01	K-		MJE350	A	151-0698-00	H+	
.5	300.	10.	40	.03	.75	20.	62.5	12.5	4	TO-202A						MDS60 Fmly	A	151-0612-00	H-	4E
.5	300.	10.	40	.03	1.5	45.	62.5	12.5	4	TO-202A	2N6558	A	151-0615-00	G	4G					
.5	350.	10.	25	.001	1.8	45.	62.5	12.5	4	TO-202	2N6559	A	151-0693-00	G+		MDS60 Fmly	A	151-0694-00	H+	
.5	425.	20.8	20	.005		10.		6.	3	TO-126	MJE340 Fmly	A	151-0613-00	H+						
1.	45.	6.25	50	.1	.5	75.	75.	20.	4	TO-202A						D41E Fmly	A	151-0440-00	G+	4H
1.	100.	30.	40	.2	.7	3.	62.5	4.17	2	TO-220	TIP29C	A	151-0464-00	G	4F	TIP30C	A	151-0462-00	G+	4F
1.	120.	10.	40	.01	.8	50.	62.5	12.5	4	TO-202A	2N6591	A	151-0728-00	F+						
1.	250.	40.	30	.3	1.	10.	62.5	3.12	3	TO-220	TIP47	A	151-0497-00	G+	4H					
1.	350.	20.	20	.1	.9	15.	70.	5.	3	TO-66	2N3585 Fmly	A	151-0241-00	I+	3H					
1.	400.	40.	30	.3	1.	10.	62.5	3.12	3	TO-220	TIP50/2SC2333	A	151-0423-00	I	5H					
1.5	50.	10.	10k††	.2	1.5	75.	100.	12.6	4	TO-202A	D40K2	A	151-0496-00	G	4G					
1.5	250.	25.	30	.005	1.	60.	83.3	5.	2	TO-220	2SC2336BR	A	151-0697-00	I+		2SA1006BR	A	151-0696-00	J-	
1.5	400.	40.	5	1.	.3	5.	88.	3.12	3	77-03	MJE13003 Fmly	A	151-0634-00*	I	3I					
2.	40.	10.	15k††	.5	1.5	100.	125.	12.5	4	X-81	MPSU45	A	151-0390-00	G	5F					
2.	40.	10.	15k††	.5	1.5	50.	125.	12.5	4	X-81						MPSU95	A	151-0391-00	H-	4E
2.	80.	8.	10	1.	1.	230.	75.	15.6	4	TO-202A	D40E7	A	151-0439-00	G+	4F	D41E7	A	151-0463-00	H+	3G
2.	300.	35.	25	1.		15.	70.	5.	3	TO-66	2N3584 Fmly	A	151-0316-00	I+	2H					
2.	300.†	35.	25	1.		15.	70.	5.	3	TO-66	2N3584 Fmly	N	151-0210-00	I	4F					
2.	300.	35.	30	.75	1.	15.	70.	5.	3	TO-66	2N4240	A	151-0251-00	I+	4G					
2.	350.	30.	40	.05	1.	20.	60.	4.	4	TO-220	D44T4 Fmly	A	151-0358-00	H+	4G					
2.5	1500.†	75.	5	.02	1.5	4.		1.67	3	TO-3	MJ12002 Fmly	A	151-0346-00	J+						
3.	60.	12.	20	1.	1.5	50.	60.	10.	4	TO-202B	D42C9	A	151-0365-00	G+	4F					
3.	60.	12.5	20	1.	.5	40.	60.	10.	4	TO-202B						D43C8	A	151-0364-00	H+	4H
3.	60.	30.	500	.5	1.	15.		4.167	3	TO-220	2SC1983	A	151-0671-00	J						
3.	60.	40.	25	1.	1.2	3.	62.5	3.125	2	TO-220	TIP31A	A	151-0478-00	G	4H					
3.	75.	25.	25	1.		3.		5.	2	TO-126	MJE520 Fmly	A	151-0334-00	G+	4F	MJE370 Fmly	A	151-0335-00	G	4E
3.	100.	40.	25	1.	1.2	3.	62.5	3.125	2	TO-220	TIP31C	A	151-0476-00	G	4E	TIP32C	A	151-0482-00	G	3E
3.	140.	25.	25	.5	1.	.4		7.	1	TO-66	2N3441 Fmly	N	151-0149-00	I-	4C					
3.	300.	20.	40	.1	2.5	15.		7.5	3	TO-66	2N3739	N	151-0201-00	I-						
3.	300.	100.	30	.3	1.5	2.5	36.7	1.25	3	TO-218	TIP52	A	151-0623-00	J-	4G					
3.	700.	100.	15	.2		1.5	35.7	1.25	3	TO-3	DTS721 Fmly	A	151-0468-00	J+	3H					
3.5	300.†	100.	30	1.	.8	2.5		.75	3	TO-3	DTS411 Fmly	A	151-0256-00	J	4H					
3.5	400.	100.	30	1.	.5	4.		.75	3	TO-3	2N3902 Fmly	N	151-0266-00	J+						
3.5	400.	100.	30	1.	5.	4.		1.	3	TO-3	DTS402 Fmly	N	151-0314-00	J+	3H					
4.	40.	25.	25	1.5	1.5	.5	75.	7.	1	TO-66	40250 Fmly	N	151-0148-00	H	4F					
4.	40.	40.	40	1.	.3	2.	83.3	3.12	2	TO-126	MJE521 Fmly	A	151-0323-00	H-	4F	MJE371	A	151-0324-00	H-	4E
4.	45.	27.	40	.2	.5	40.	75.	4.2	4	TO-220						D45C6 Fmly	A	151-0366-00	I-	4H
4.	45.	30.	40	.2	.5	50.	75.	4.2	4	TO-220	D44C6 Fmly	A	151-0352-00*	H-	4G					
4.	50.	25.	25	1.5	1.5				1	TO-66	40250V1	N	151-0217-00	H	1J					
4.	60.	15.	40	.2	2.5	50.	83.4	8.34	4	TO-126	MJE224	A	151-0466-00	G+	4E	MJE234	A	151-0465-00	H-	5E
4.	60.	30.	40	.2	.5	50.	75.	4.2	4	TO-220	D44C9	A	151-0473-00	H	3J					
4.	60.	30.	100	.2	.5	50.	75.	4.2	4	TO-220	D44C8	A	151-0743-00	I						
4.	60.	40.	1k††	1.	1.8	1.	83.3	3.125	2	TO-126	MJE800 Fmly	A	151-0405-00	G+	5F	MJE700 Fmly	A	151-0429-00	G	4E
4.	70.	36.	30	.5	1.	.8	62.5	3.5	1	TO-220	2N5294 Fmly	A	151-0262-00	G+	3G					
4.	80.	20.	20	1.	2.5	10.		7.5	2	TO-66	2N3767 Fmly	A	151-0226-00	I	3F					
4.	80.	25.	30	.25	.6	4.			2	TO-66						2N3741	A	151-0227-00	H	4D
4.	140.	40.	35	1.	.5	20.	62.5	3.12	4	TO-220						FT417B	A	151-0647-00	I+	3F
4.	400.	75.	10	1.	1.	4.	62.5	1.67	3	TO-220	MJE13005	A	151-0678-00	I+	4H					
5.	60.	30.	40	2.	1.5	70.		3.3	4	TO-3	2N4111	N	151-0239-00	K-	3E					
5.	60.	70.	750††	4.	2.8	1.		1.8	2	TO-127	MJE1101	A	151-0425-00	H+	2I					
5.	100.	70.	750††	3.	2.5	1.		1.79	2	TO-127	MJE1102	A	151-0415-00	I-	4G	MJE1092	A	151-0414-00	I+	4F
5.	225.	100.	20	2.	2.5	5.		1.75	2	TO-3	2N5239	A	151-0315-00	J+	3F					
5.	625.†	110.			1.25	5.		1.75	3	TO-3	2N6308 Fmly	A	151-0368-00	J+	4H					
5.	800.	80.	7.5	1.	2.			1.25	3	TO-220	MJE8503		151-0707-00							
5.	1500.†	50.	5	.01	1.	1.		2.5	3	TO-3	BU208/2SD348 Fmly	A	151-0449-00	K	4H					
5.	1500.†	100.			1.5	1.5		1.25	3	TO-3	MJ12004	A	151-0760-00							
5.	1600.†	100.			1.5	1.5		1.25	3	TO-3	MJ12004 Fmly	N	151-0747-00	L	3H					
6.	100.	150.	25	3.	1.	1.		1.17	2	TO-3	2N5758	A	151-0485-00	I-	3G					
6.	120.	150.	20	3.	1.	1.		1.17	3	TO-3						2N6227	A	151-0419-00	I-	3H
8.					3.			1.56	3	TO-3	MJ10011		151-0759-00							
8.	80.	75.	1000††	4.	4.	4.	57.	1.67	2	TO-220	2N6044	A	151-0656-00	H-	4F	2N6041	A	151-0657-00	H	
8.	400.	80.	8	2.	.7	4.	62.5	1.56	3	TO-220	MJE13007	A	151-0632-00	J+	4I					
10.	45.	50.	40	4.	.25	50.	75.	2.5	4	TO-220	D44H3 Fmly	A	151-0621-00	I	4D					
10.	60.	90.	25	3.		2.		1.39	2	TO-127	MJE2801 Fmly	A	151-0349-00	H	5G	MJE2901	A	151-0373-00	H+	5F
10.	60.	150.	50	1.	1.	4.		1.17	2	TO-3						2N3791	A	151-0644-00	I	
10.	60.	150.	1000††	5.	2.	1.		1.17	2	TO-3						MJ2500	A	151-0495-00	J-	
10.	80.		200	10.		12.				TO-3	DTS1010	A	151-0454-00	I-						

*SAFETY CONTROLLED.

TRANSISTORS (CONT)

POWER, SILICON (NPN - PNP)

6

I_c (A) MAX	BV_{ceo} BV_{cbo}+ (V)	PWR ± T_j= 25°C W	h_{FE} (++DARLINGTON)	I_c @ (A)	V_{CE} (sat)	f_t MIN (MHz)	°C/W θ_{JA}	°C/W θ_{JC}	Δ SOA	† CASE STYLE	NPN JEDEC OR MFR. NO.	NPN ** ND	NPN PART NUMBER	NPN CC	NPN †† RC	PNP JEDEC OR MFG. NO.	PNP ** ND	PNP PART NUMBER	PNP CC	PNP †† RC
10.	120.		15	8.	1.			1.46	1	TO-3	2N4348 Fmly	N	151-0218-00	J						
10.	80.	50.	60	2.	1.	50.	75.	2.5	4	TO-220	D44H11	A	151-0426-00	I+	4H	D45H11	A	151-0625-00	I	4G
10.	80.	50.	60	2.	1.	50.	75.	2.5	4	TO-220	D44H11 Fmly	A	151-0426-01	I+	4D	Selected				
10.	80.	150.	30	3.	.8	4.		1.17	2	TO-3	2N3716	A	151-0633-00	J						
10.	85.	90.	25	3.		2.		1.39	2	TO-127	MJE2801 Fmly	A	151-0436-00	H+	5F					
10.	100.	80.	40	1.	1.	3.	35.7	1.56	2	TO-218	TIP33C	A	151-0660-00	H						
10.	100.	125.	1000++	5.	2.	18.	35.7	1.	2	TO-218	TIP142	A	151-0606-00	J-	4H	TIP147	A	151-0607-00	J	4H
10.	120.	60.	40	5.	1.8	30.			2	TO-220						2SA1077G	A	151-0745-00	L	
10.	120.	60.	40	5.	2.	80.	83.33	2.083	2	TO-220	2SC2527G	A	151-0701-00	J-	4D					
10.	160.	117.	20	3.		.8		1.5	1	TO-3	2N3442	N	151-0209-00	J+						
10.	450.	125.	60	2.5	1.5	12.5		1.4	3	TO-61	2N6586 Fmly	A	151-0703-00	N+	3F					
12.	400.	100.	8	5.	3.	4.	62.5	1.25	3	TO-220	MJE13009	A	151-0679-00	K-	4H					
15.	45.	100.	500++	4.	2.	1.			2	TO-3	SJ4208	A	151-0491-00	I+	3I					
15.	60.	87.	20	4.	3.	4.		1.167	2	TO-3						2N4905	A	151-0258-00	H+	4F
15.	60.	115.	20	4.	1.1	.3		1.5	1	TO-3	2N3055H Fmly	A	151-0140-00	I	5F					
15.	60.	115.	20	3.	1.1	.8		1.52	1	TO-3	2N3055H Fmly	A	151-0336-00	I-						
15.	60.	115.	20	3.	1.1	.8		1.5	1	TO-3	2N3055H Fmly	A	151-0337-00	I-	4F					
15.	70.	90.	20	5.	1.8	3.		1.39	2	TO-127	MJE1661 Fmly	A	151-0469-00	J-	3F					
15.	80.	120.	40	3.	1.1	.2		1.46	1	TO-3	SENT139	A	151-0487-00	I+	4G					
16.	140.	150.	40	2.	1.4	.2		1.17	1	TO-3	2N3773 Fmly	A	151-0291-00	K-	3F					
20.	75.	140.	20	10.	5.	60.		.5	4	TO-3	2N5039	A	151-0603-00	K-	2H					
25.	60.	125.	10	15.	4.	3.	35.7	1.	2	TO-218	TIP35A	A	151-0477-00	J	4H	TIP36A	A	151-0616-00	J-	3J
25.	100.	125.	10	15.	4.	3.	35.7	1.	2	TO-218	TIP35C	A	151-0652-00	J+	3F	TIP36C	A	151-0651-00	J	3I
30.	40.	150.	15	15.	2.	.8		1.17	1	TO-3	2N3771	A	151-0275-00	J-						
30.	80.	250.	20	15.	3.	.8		.7	1	TO-3	2N6258	A	151-0413-00	K						
40.	60.	100.	20	20.		10.			3	TO-3	1743-0620 Fmly	A	151-0319-00	N-	2H					

COST CODE

(CC COLUMN)

CODE	≈ VALUE with -	≈ VALUE no suffix	≈ VALUE with +
A	.2¢	.5¢	.75¢
B	1.25¢	1.5¢	2¢
C	2.5¢	3¢	3.75¢
D	4.25¢	5¢	6¢
E	7¢	8¢	10¢
F	13¢	15¢	18¢
G	22¢	25¢	35¢
H	40¢	50¢	60¢
I	65¢	75¢	$1
J	$1.25	$1.50	$2
K	$2.50	$3	$3.75
L	$4.25	$5	$6
M	$7	$8	$10
N	$13	$15	$18
O	$22	$25	$35+

NOTE: Costs may vary from order to order due to order quantities, vendor, etc.

I_C	-	Collector Current
BV_{CEO}	-	Collector to Emitter Breakdown Voltage
BV_{CBO}	-	Collector to Base Breakdown Voltage
f_t	-	Unity Current Gain or Bandwidth Product
h_{FE}	-	Forward Current Transfer Ratio
V_{CE} (SAT)	-	Collector-Emitter Saturation Voltage
θ_{JA}	-	Junction-to-Ambient Thermal Resistance
θ_{JC}	-	Junction-to-Case Thermal Resistance
SOA	-	Safe Operating Area

†† RELIABILITY CODES

USAGE/YR	CODE
≥10	1
≥100	2
≥1 000	3
≥10 000	4
≥100 000	5
≥1 000 000	6
≥10 000 000	7

FAILURE FREQ	CODE		%/YR (median)
1/100 000	A	=	.001
1/50 000	B	=	.002
1/20 000	C	=	.005
1/10 000	D	=	.01
1/5 000	E	=	.02
1/2 000	F	=	.05
1/1 000	G	=	.1
1/500	H	=	.2
1/200	I	=	.5
1/100	J	=	1.0+

For further explanation of this code, see page 9-27.

** Component Evaluation Engineering Recommendation New Design Code:

A - Acceptable
N - Not Recommended

Δ USE THE ABOVE SOA (SAFE OPERATING AREA) CLASSIFICATIONS AS GUIDELINES ONLY. DEFINITIVE SOA GRAPHS CAN BE FOUND IN THE TEKTRONIX SPECIFICATION FOR EACH INDIVIDUAL PART NUMBER. SEE PAGE 9-28 FOR GUIDELINE GRAPHS.

† FOR CASE DRAWINGS, SEE PAGES 9-2 THRU 9-8.

TRANSISTORS (CONT)

POWER (FOR REFERENCE ONLY)

DO NOT USE IN NEW DESIGN

PART NUMBER	JEDEC OR VENDOR NO.	§§ ST	OTHER	† CASE STYLE	F_t @ MIN MHz	I_c mA	C_{ob} @ V_r C_{cb} pF	V	h_{FE} @ MIN	MAX	V_{CE} & I_c V	A	BREAKDOWN VOLTS cbo	ceo	ebo	I_C (MAX) mA	PWR AMB (W)
151-0001-00	2N301	NP	PNP Germanium	TO-3	.200	1.			70		1	1.5	40	40	10	1.5	
151-0002-00	2N277	CR	PNP Germanium	TO-36	.010	5.			35	70	2	5.	40	25	20	15.	
151-0006-00	2N307A	NP	PNP Germanium	TO-3	.0035	1.			30		1	.2	35	35	10	5.	
151-0009-00	2N301S	NP	PNP Germanium	TO-3	.200	1.			50	165	2	1.	60	50	10	10.	
151-0012-00	2N671	OB	PNP Germanium	TO-26	.500	.1			40	250	1.5	1.	40	cex 40	40	2.	1.
151-0013-00	2N1126	NP	PNP Germanium	TO-26	.400				40		6	.01	40		40	.25	1.
151-0014-00	2N307	OB	PNP Germanium	TO-3	.003	1.			20		1	.2	35	35	10	5.	
151-0018-00	2N250A	CS	PNP Germanium	TO-3	.008	.5			30		1.5	.5	30			3.	
151-0034-00	2N554	NP	PNP Germanium	TO-3	.055	.5			50		2	.5	15	16	15	3.	
151-0043-00	2N511	NP	PNP Germanium	MD-4	.260				20	60	2	10.	40	30	30	25.	
151-0046-00	2N1529	CS	PNP Germanium	TO-3	.010	3.			20	40	2	3.	40	20	20	5.	
151-0057-00	2N1905	NP	PNP Germanium	TO-3	5	.5			50	150	2	1.	60	40	1	10.	
151-0060-00	2N1545	NP	PNP Germanium	TO-3	.004	3.			75	150	2	3.	60	30	30	5.	
151-0066-00	2N1700	NP	NPN Silicon	TO-5													
151-0079-00	2N1429	OB	PNP Silicon	TO-5	16	.001	14	3	12		.5	.005	6	6	6	.05	.10
151-0082-00	T1495	OB	NPN Silicon	TO-5	20	.001	2		120		5	.01	40	20	1	.02	.12
151-0101-00	2N2137A	NP	PNP Germanium	TO-3	.012	2.			30	60	2	.5	30	20	15	3.	
151-0102-00	SP1398/MP504	CR	PNP Germanium	TO-36	.002	15.			50	100	2	15.	45	30	25	60.	
151-0110-00	507C768H02	OB	NPN Silicon	MT-1	.050				18	75	4	1.5	80	40	25	6.	
151-0111-00	507C768H01	OB	NPN Silicon	MT-1	.050				11	46	4	1.5	140	70	25	6.	
151-0112-00	2N1489 Fmly	OB	NPN Silicon	TO-3	1	.1	200	40	25	75	4	1.5	60	40	15	6.	
151-0113-00	2N1488 Fmly	OB	NPN Silicon	TO-3	1	.1	200	40	15	45	4	1.5	100	55	10	6.	
151-0118-00	2N2339	OB	NPN Silicon	TO-57	.500	.005			20	150	4	.3	60	40	6	2.5	
151-0125-00	2N1701	CS	NPN Silicon	TO-8													
151-0128-00	2N2140	CS	PNP Germanium	TO-3	.012	2.			30	60	2	.5	75	60	40	3.	
151-0132-00	2N2156	CS	PNP Germanium	TO-36	.002	5.			80	160	2	5.	45	30	25	30.	
151-0137-00	2N2148	CR	PNP Germanium	TO-3	2	.5			60		2	1.	60	40	1.5	5.	
151-0141-00	40251 Fmly	CR	NPN Silicon	TO-3													
151-0158-00	DTG2400	CS	PNP Germanium	TO-3	.150	5.			30		2	.1		cex 120	1	25.	
151-0163-00	2N1899 Fmly	NP	NPN Silicon	MT-39	100	.5	1	10	50		5	5.	70	70	5	10.	
151-0165-00	2N3614 Fmly	CR	PNP Germanium	TO-3	.300	.5			60	120	2	3.	60	35	30	7.	
151-0168-00	40264 Fmly	NP	NPN Silicon	TO-66	25	.02	5	50	50	250	10	.05	300	cex 300	3	.1	
151-0170-00	2N2147	CS	PNP Germanium	TO-3	4	.5			100		1	1.	75	50	1.5	5.	
151-0196-00	2N3440	NP	NPN Silicon	MD-34	15	.01	10	10	30		10	.002	300	250	7	1.	
151-0286-00	2SC515A	LR	NPN Silicon	TO-66	60				40		1	.05		350		.015	20.
151-0299-00	2N5956 Fmly	CS	PNP Silicon	MD-30	5	1.			20	100	4	3.	60	50	5	6.	6.
151-0311-00	MJE340	CR	NPN Silicon	TO-126	.100	.1	25	10	30	240	10	.05		300	3	.5	1.4
151-0312-00	2N4898	LD	PNP Silicon	TO-66	3	.25	100	10	40		1	.05	40	40	5		
151-0355-00	2SC642A	CR	NPN Silicon	TO-3	.500				30			.15	1500			.01	50.
151-0363-00	2N6101	DL	NPN Silicon	TO-220	.800	.5			20	80	4	5.	80	70	15	10.	1.8
151-0370-00	TIP34	OB	PNP Silicon	X-86	3	.5			20		10	.5	40	40	5	3.	3.5
151-0386-00	TIP33	OB	NPN Silicon	X-86	3	.5			40		4	1.	40	40	5	10.	3.5
151-0387-00	TIP30	OB	PNP Silicon	TO-220	3	.2			20		10	.2	40	40	5	1.	
151-0394-00	TIP33A	OB	NPN Silicon	X-86	3	.5			40		4	1.	60	60	5	10.	3.5
151-0399-00	TIP29	OB	NPN Silicon	TO-220	3	.2			40		4	.2	40	40	5	1.	2.
151-0433-00	2N3055	OT	NPN Silicon	TO-41	2.5				20			4.		60		15.	115.
151-0470-00	MJ3771 Fmly	CR	NPN Silicon		2	1.			15	60	4	15.		40		30.	200.
151-0483-00	B1182	CS	PNP Germanium	TO-3	1	.5			25		3	6.	320	320	2	10.	
151-0620-00	D44H3	PP	NPN Silicon	TO-220													
151-0654-00	P1C1068	CS	PNP Silicon	TO-3													
151-0729-00	D45H Fmly	DL	PNP Silicon	TO-220	40				40		.4	4.		60		1.	50.
151-0746-00	MJ12003 Fmly	PP	NPN Silicon	TO-220	4							1.	1600.			4.	100.

TRANSISTORS (CONT)

ARRAYS

VENDOR NUMBER	PART NUMBER	** ND	CC	†† RC	DESCRIPTION	CASE STYLE
MC1413PDS	156-1245-00	A	I-	4F	H/V, high current driver array, 7-darlington, Screened	16 DIP
MPQ2907	156-1163-00	A	J-	3H	4-transistor, high current, PNP	14 DIP
CA3045	156-0065-00	N	I-	4F	5-transistor array, selected for V_{ce} (sat) ≤0.4V, NPD	14 DIP
CA3045	156-0065-01	N	I	4H	Screened	16 DIP
CA3046	156-0068-00	N	H-		5-transistor array, NPN	14 DIP
CA3046	156-0048-00	A	K+	5D	5-transistor array, NPN	14 DIP
CA3046	156-0048-01	A	H-		Inspected	14 DIP
CA3046	156-0048-02	N	H		Checked	14 DIP
CA3046	156-0048-03	N	H+	4F	Selected	14 DIP
CA3054	156-1349-00	A	H	4D	Dual Differential Amplifiers, NPN	14 DIP
CA3054	156-1349-01	N	H		Screened	14 DIP
CA3060E	156-0901-00	A	J	2I	Operational transconductance amplifier array	16 DIP
CA3081	156-0355-00	A	H+		7-transistor, common emitter, NPN	16 DIP
CA3082	156-1190-00	A	H-		7-transistor, common collector, NPN	16 DIP
CA3083	156-0259-00	A	H		5-transistor, all independent, NPN	16 DIP
CA3083	156-0259-01	N	I-		Selected, NPN	16 DIP
CA3083	156-0259-02	N	H+	3F	Selected, NPN	16 DIP
CA3086 (similar)	156-0197-00	A	I	4E	5-transistor array, NPN	14 DIP
CA3086	156-0197-01	N	I		Checked	14 DIP
CA3086	156-0197-03	N	I+	4H	Checked	
CA3096AE	156-1381-00	A	H		5-transistor array (3 NPN, 2 PNP)	16 DIP
CA3102	156-0534-00	A	I+	5D	Dual differential amplifier, NPN (6)	14 DIP
CA3102	156-0534-01	N	J-	3E	Screened	14 DIP
CA3127E	156-1294-00	A	I+	5B	High frequency, 5-transistor array, NPN	16 DIP
CA3183 (similar)	156-1527-00	A	I-		5-transistor array, NPN (High Voltage CA3083)	16 DIP
	156-1569-00	A	I	3F	4-transistor, PNP, High Current, Drivers	14 DIP
CA3725G	156-0281-00	A	I	4B	4-transistor, high current NPN	14 DIP
SD5000B	Δ156-1303-00	A	K		DMOS FET Quad Analog Switch, N-Channel	16 DIP
SD5000	156-1303-01		L		Screened	
SD5002CM	156-1533-00	A	N-		DMOS FET Quad Analog Switch, N-Channel	

COST CODE

(CC COLUMN)

CODE	≈ VALUE with -	≈ VALUE no suffix	≈ VALUE with +
A	.2¢	.5¢	.75¢
B	1.25¢	1.5¢	2¢
C	2.5¢	3¢	3.75¢
D	4.25¢	5¢	6¢
E	7¢	8¢	10¢
F	13¢	15¢	18¢
G	22¢	25¢	35¢
H	40¢	50¢	60¢
I	65¢	75¢	$1
J	$1.25	$1.50	$2
K	$2.50	$3	$3.75
L	$4.25	$5	$6
M	$7	$8	$10
N	$13	$15	$18
O	$22	$25	$35+

NOTE: Costs may vary from order to order due to order quantities, vendor, etc.

** NEW DESIGN RECOMMENDATION FROM COMPONENT ENGINEERING:

A = Acceptable
N = Not Recommended

†† RELIABILITY CODES

USAGE/YR	CODE
≥10	1
≥100	2
≥1 000	3
≥10 000	4
≥100 000	5
≥1 000 000	6
≥10 000 000	7

FAILURE FREQ	CODE		%/YR (median)
1/100 000	A	=	.001
1/50 000	B	=	.002
1/20 000	C	=	.005
1/10 000	D	=	.01
1/5 000	E	=	.02
1/2 000	F	=	.05
1/1 000	G	=	.1
1/500	H	=	.2
1/200	I	=	.5
1/100	J	=	1.0+

For further explanation of this code, see page 9-27.

STATIC
SENSITIVE

HANDLING OF STATIC SENSITIVE COMPONENTS

MOST SEMICONDUCTOR PART TYPES, BOTH SEPARATELY AND IN ASSEMBLIES, HAVE BEEN FOUND TO BE SUSCEPTIBLE TO DAMAGE AT VOLTAGE LEVELS COMMONLY FOUND IN MANUFACTURING ENVIRONMENTS. THE SIMULATED STATIC DISCHARGE TESTS SHOWED THE FOLLOWING CATEGORIES TO BE ESPECIALLY SUSCEPTIBLE:

CATEGORIES	RELATIVE DEGRADATION LEVEL[1]
MOS OR CMOS MICROCIRCUITS OR DISCRETES OR LINEAR MICROCIRCUITS WITH MOS INPUTS	100 - 500
ECL	200 - 500
SCHOTTKY SIGNAL DIODES	250
SCHOTTKY TTL	500
HIGH FREQUENCY BIPOLAR TRANSISTORS	400 - 600
JFETS	600 - 800
LINEAR MICROCIRCUITS	400 - 1000 (est.)
LOW POWER SCHOTTKY TTL	900
TTL	1200

[1]VOLTS ON 100 pF CAPACITOR DISCHARGED THROUGH SERIES RESISTANCE OF 100 OHMS.

RECOMMENDATION:

SINCE ALMOST EVERY ASSEMBLY INCLUDES SOME OF THESE PARTS, WE RECOMMEND STATIC SENSITIVE PROCEDURES BE IMPLEMENTED FOR ALL OPERATIONS INVOLVING SEMICONDUCTOR PART HANDLING.

DIRECT ANY QUESTIONS TO:

RON SCHWARTZ, COMP. REL. ENG., Ext. 1605.

6

NOTES

7

DESOLDERING TOOLS-STATIC CHARGE

TOOL	CHARGE LEVEL RETAINED ON TOOL		
	Immediate charge	Charge after time	
Silverstat Soldapullt	0V	0V	After five minutes
Deluxe Soldapullt	3kV	300-400V	After five minutes
Standard Soldapullt	20kV	10kV	After five minutes
Bulb Solder Sucker	10kV	4kV	After five minutes
Solder-Wick	*2kV	0V	After one minute

*Charge was retained due to solder-wick's plastic reel

Some circuit board components are sensitive to static charge. Also, some desoldering tools create a static charge. In order to identify and preclude potential problems, we have tested the various desoldering tools available for use at Tek.

A circuit board was used, with components removed, to determine static levels. Each device was tested ten times. The desoldering tools were checked for immediate charge retention and for the charge held after five minutes.

Each of the tools except the Silverstat Soldapullt, left a static charge on the circuit board and retained a charge (see chart). The Silverstat Soldapullt, a model with a metallized surface, left no charge and also retained no charge. Therefore, it is the preferred tool. It has been assigned part number 003-0795-00.

For more information on these desoldering tools, contact Herb Zajac, ext. 4759.

TRANSISTORS (CONT)

JUNCTION FETS (SINGLE)

N-CHANNEL

STATIC SENSITIVE

THIS APPLIES TO ALL DEVICES ON THIS PAGE

7

LINE	I_{DSS} RANGE MIN mA	I_{DSS} RANGE MAX mA	V_P MAX (V)	C_{ISS} / C_{RSS} (pF)	G_m @ V_{DG} & I_D: μMHOS or *R_{ON}	(V)	mA	I_G @ V_{DG} & I_D: I_{GSS} pA	@ V_{GS} (V)	mA	V_{DG} MIN (V)	+ CASE STYLE	** ND	CC	++ RC	PART NUMBER	COMMENTS
1	1.	6.	8.	8	1000	10	IDSS	.010	10	IDSS	20	TO-72	N	I+		151-1002-00	Single Source
				2													
2	.5	3.	4.	6	1000	15	IDSS	100	15	IDSS	50	TO-92	A	G	4D	151-1004-00	
				2				100	15								
3	2.	6.	5.	6	2000	15	IDSS	100	15	2	50	TO-92	A	F+	5G	151-1005-00	151-1005-03 Taped & Reeled
				2				100	15								
4	5.	15.	8.	6	2500	15	IDSS	100	15	5	50	TO-92	A	G	4H	151-1006-00	
				2				100	15								
5	5.	15.	6.	4	4500	15	IDSS	100	10	5	30	TO-72C	A	I-	4F	151-1012-00	
				.8				100	20								
6	2.	6.	6.	6	2000	15	IDSS	100	15	2	50	TO-72C	A	H	4G	151-1015-00	Metal Can version of 151-1005-00
				2				100	15								
7	25.	150.	10.	14	*30Ω						40	TO-18C	A	G+	4E	151-1021-00	
				5			1	500	20								
8	25.	75.	4.	14	*80Ω						40	TO-18C	A	H-	4D	151-1022-00	
				3.5			1	100	20								
9	5.	15.	6.	4.5	4500	15	IDSS	100	12	5	30	TO-92	A	G+	5G	151-1025-00	
				1				100	20								
10	2.	6.		6	2000	15	IDSS	100	15	2	50	TO-92	N	H-		151-1026-00	V_P-2.5 to 3V w/ V_{DG} = 1V & I_D = 10μA
				2				100	15								
11	12.	50.	10.	25	*400Ω						175	TO-5	N	L		151-1028-00	Single Source
				4			.1	5nA	75								
12	30.		10.	16	*30Ω						4	TO-92	A	G-	4F	151-1059-00	
				5			1	200	20								
13	1.	3.6	3.5	7	1000	10	IDSS				50	TO-72C	A	H	3G	151-1068-00	
				3				10	10								
14	5.	75.	3.5	14	*90Ω						40	TO-92	A	G	4C	151-1078-00	
				3.5			1	100	20								
15	.03	.09	1.8	3	70						40	TO-72C	A	J+		151-1085-00	
				1.5		10	IDSS	1.0	20								
16	12.	30.	4.	5	*100Ω						25	TO-92	A	G	3F	151-1086-00	Single Source
				2.5		10	10	150	15								
17	30.		4.	30	*10Ω						25	TO-52	A	I		151-1110-00	
				15		25	10	200	15								
18	10.	30.	4.5	5.5	6000	10	10	100	9	5	25	TO-92F	A	G+	5E	151-1124-00	Single version of 151-1032-00
				1.5				100	15								
19	5.	15.	6.	4.	4500	15						DIE	A	H		151-1146-00	DIE 2N4416
				8.				100	15								
20	24.	60.	6.		10K	10	IDSS	150	15		25	TO-236	N	H		151-1148-00	Single Source U310 in SOT-23

TRANSISTORS (CONT)

JUNCTION FETS (SINGLE)

P-CHANNEL

STATIC SENSITIVE

THIS APPLIES TO ALL DEVICES ON THIS PAGE

7

LINE	I_{DSS} RANGE MIN mA	I_{DSS} RANGE MAX mA	V_P MAX (V)	C_{ISS} / C_{RSS} (pF)	G_m µMHOS or *R_{ON}	@ V_{DG} (V)	& I_D mA	I_G I_{GSS} pA	@ V_{GS} (V)	& I_D mA	V_{DG} MIN (V)	+ CASE STYLE	** ND	CC	†† RC	PART NUMBER	COMMENTS
1	4.	16.	9.	7	2000	15	IDSS				40	TO-92	A	H-		151-1039-00	
				2				5nA	20								
2	1.	5.	4.5	7	1000	15	IDSS				40	TO-92	A	H-	4D	151-1045-00	
				2				5nA	20								
3	10.		10.	45	*70Ω						30	TO-92	A	H-	4D	151-1066-00	
				10			1	2nA	15								
4	10.		5.	45	*90Ω						30	TO-92	A	I+	5B	151-1097-00	
							1	2nA	15								
5	2.	9.	7.5	5	1500	15	IDSS				40	TO-92	A	G		151-1109-00	P-Channel Complement to the 151-1005-00
				1				5nA	20								

I_{DSS}	-	Drain to Source Saturation Current
V_P	-	Pinchoff Voltage
C_{ISS}	-	Small Signal, Common Source, Short Circuit Input Capacitance
C_{RSS}	-	Small Signal, Common Source, Short Circuit Reverse Transfer Capacitance
G_m	-	Transconductance
V_{DG}	-	Drain to Gate Voltage
I_D	-	Drain Current
I_G	-	Gate Current, Channel Current Flowing
I_{GSS}	-	Gate Current, Source Shorted to Drain
BV_{DS}	-	Drain-to-source Breakdown Voltage
R_{ON}	-	Drain-to-source Resistance
V_{TH}	-	Threshold Voltage

COST CODE

(CC COLUMN)

CODE	A	B	C	D	E	F	G	H	I	J	K	L	M	N	O
≈ VALUE with +	.75¢	2¢	3.75¢	6¢	10¢	18¢	35¢	60¢	$1	$2	$3.75	$6	$10	$18	$35+
≈ VALUE no suffix	.5¢	1.5¢	3¢	5¢	8¢	15¢	25¢	50¢	75¢	$1.50	$3	$5	$8	$15	$25
≈ VALUE with -	.2¢	1.25¢	2.5¢	4.25¢	7¢	13¢	22¢	40¢	65¢	$1.25	$2.50	$4.25	$7	$13	$22

NOTE: Costs may vary from order to order due to order quantities, vendor, etc.

†† CATALOG RELIABILITY CODES

USAGE/YR	CODE
≥10	1
≥100	2
≥1 000	3
≥10 000	4
≥100 000	5
≥1 000 000	6
≥10 000 000	7

FAILURE FREQ	CODE		%/YR (median)
1/100 000	A	=	.001
1/50 000	B	=	.002
1/20 000	C	=	.005
1/10 000	D	=	.01
1/5 000	E	=	.02
1/2 000	F	=	.05
1/1 000	G	=	.1
1/500	H	=	.2
1/200	I	=	.5
1/100	J	=	1.0+

For further explanation of this code, see page 9-27.

+ FOR CASE DRAWINGS, SEE PAGES 9-2 THRU 9-8.

**COMPONENT EVALUATION ENGINEERING RECOMMENDS FOR NEW DESIGN: A-ACCEPTABLE, N-NOT RECOMMENDED.

TRANSISTORS (CONT)

MOS FETS (SINGLE)

N-CHANNEL

STATIC SENSITIVE

THIS APPLIES TO ALL DEVICES ON THIS PAGE

7

LINE	MODE Depletion or Enchantment	I_D(Max)	V_{TH}	G_m(Min) mMHOS @ Conditions / Ω = R_{ON}(Max)	Conditions Not Shown	C_{ISS} (pF) / C_{RSS} (pF)	BV_{DS}	I_{GSS}	† CASE STYLE	** ND	CC	†† RC	PART NUMBER	COMMENTS
1	E	500 mA	.5 - 2.3	100 / 9Ω	V_{DS} = 15 / I_D = 100mA	28 / 1	60	100	TO-72C	N	K	4H	151-1098-00	SD222DC
2	E	50 mA	.5 - 2.	10 / 45Ω	V_{DS} = 10 / I_D = 20mA	3.5 / .5	30	100	TO-72C	A	I+	4F	151-1103-00	DMOS SD210DE
3	E	2 A	.8 - 2.	170-250 / 5Ω	V_{DS} = 24 / I_D = 500mA	40 / 10	90	100 nA	TO-39A	A	K-	3G	151-1108-00	VMOS VN99AK
4	E	8 A	.5 - 2.5	1.1mhos / .5Ω	V_{DS} = 20 / I_D = 3A	650 / 100	90	100 nA	TO-39A	A	L		151-1119-00	VMOS ITS 4000
5	E	1 A	.8 - 2.4	150 / 4Ω Typ.	V_{DS} = 24 / I_D = .5A	50 / 10	60	100 nA	TO-92D	A	I-	4E	151-1121-00	VN0106 Single Source
6	E	3.5A	2 - 4	1. / 8Ω	V_{DS} = 25 / I_D = 1.5A	150 / 25	60	100 nA	TO-220	A	K		151-1127-00	HEX FET IRF513
7	E	24 A	1 - 3	3 mhos / .12Ω	V_{DS} = 20 / I_D = 3A	1000 / 100	40	100 nA	TO-220	A			151-1130-00	Single Source Siemens BUZ-10
8	E	10 A	2 - 4	2.5mhos / .18Ω	V_{GS} = 10 / I_D = 6A	900 / 150	100	500 nA	TO-220	A	M		151-1136-00	HEX FET IRF530
9														
10	E	3.5A	2 - 4	2mhos / 1Ω	V_{GS} = 10V / I_D = 2A	1000 / 80	400	500 nA	TO-220	A	L+	4F	151-1141-00	HEX FET IRF730
11	E	500 mA	.1 - 1.5	.15 / 9Ω	V_{DS} = 15 / I_D = 150mA	28 / 1	100		DIE FORM	N	J		151-1142-00	DIE FORM 151-1143-00
12	E	500 mA	.1 - 1.5	.15 / 1.8Ω	V_{DS} = 15 / I_D = 150mA	30 / 3	100	100 nA	DIE FORM		G+		151-1142-01	
13	E	500 mA	.1 - 1.5	.15 / 9Ω	V_{DS} = 15V / I_D = 150mA	28 / 1	100		TO-117	N		3J	151-1143-00	RF POWER MOS
14	E	500 mA	.1 - 1.5	.15 / 18Ω	V_{DS} = 15V / I_D = 150mA	30 / 3	100	100 nA	TO-117		N		151-1143-01	
15	E	3.5A	2 - 4	2mhos / 1Ω	V_{DS} = 10V / I_D = 2A	1000 / 80	350	500 nA	TO-220	A	L+		151-1147-00	HEX FET IRF731
16	E	6 A	.8 - 2.4	700 / 1.8	V_{DS} = 15V / I_D = 2A	85 / 15	30	1 μA	DIE FORM		I		151-1150-00	VNOZ
17		1.2A	2 - 4	.5 / 3.6Ω	V_{DS} = 100V / I_D = .6A	150 / 15	400	500 nA	TO-220		J+		151-1151-00	IRF710 MPT3N40
18		1.5A	2 - 4	1. / 3.	V_{DS} = 100 / I_D = 1	400 / 40	500	500 nA	TO-220		K+		151-1152-00	IRF820 MPT475

† FOR CASE DRAWINGS, SEE PAGES 9-2 THRU 9-8.

TRANSISTORS (CONT)

MOS FETS (SINGLE)

STATIC SENSITIVE

THIS APPLIES TO ALL DEVICES ON THIS PAGE

P-CHANNEL

LINE	MODE Depletion or Enchantment	$I_{D(Max)}$	V_{TH}	G_m(Min) mMHOS @ Conditions: Ω = R_{ON}(Max)	Conditions Not Shown	C_{ISS} (pF) / C_{RSS} (pF)	BV_{DS}	I_G (pA) or I_{GSS}	† CASE STYLE	** ND	CC	†† RC	PART NUMBER	COMMENTS
1	E	50 mA	2 - 5	1 - 4	V_{DS} = 15 I_C = 10mA	2.5 / .7	30	10	TO-72G	N	J+		151-1067-00	3N163
2	E	1 A	1.5- 3.5	150 6Ω Typ.	V_{DS} = 24 I_D = .5A	50 / 10	60	*500 nA	TO-920	A	J-		151-1120-00	Single Source VP0106
3	E	4 A	1.5- 3.5	400 1.5Ω	V_{DS} = 24 I_C = 2A	450 / 100	60	*100 nA	TO-220	A	K+		151-1128-00	HEX FET IRF9523

7

I_{DSS}	-	Drain to Source Saturation Current
V_P	-	Pinchoff Voltage
C_{ISS}	-	Small Signal, Common Source, Short Circuit Input Capacitance
C_{RSS}	-	Small Signal, Common Source, Short Circuit Reverse Transfer Capacitance
G_m	-	Transconductance
V_{DG}	-	Drain to Gate Voltage
I_D	-	Drain Current
I_G	-	Gate Current, Channel Current Flowing
I_{GSS}	-	Gate Current, Source Shorted to Drain
BV_{DS}	-	Drain-to-source Breakdown Voltage
R_{ON}	-	Drain-to-source Resistance
V_{TH}	-	Threshold Voltage

COST CODE

(CC COLUMN)

CODE	A	B	C	D	E	F	G	H	I	J	K	L	M	N	O
≈ VALUE with +	.75¢	2¢	3.75¢	6¢	10¢	18¢	35¢	60¢	$1	$2	$3.75	$6	$10	$18	$35+
≈ VALUE no suffix	.5¢	1.5¢	3¢	5¢	8¢	15¢	25¢	50¢	75¢	$1.50	$3	$5	$8	$15	$25
≈ VALUE with -	.2¢	1.25¢	2.5¢	4.25¢	7¢	13¢	22¢	40¢	65¢	$1.25	$2.50	$4.25	$7	$13	$22

NOTE: Costs may vary from order to order due to order quantities, vendor, etc.

**NEW DESIGN RECOMMENDATION FROM COMPONENT ENGINEERING:
A = Acceptable
N = Not Recommended

†† RELIABILITY CODES

USAGE/YR	CODE
≥10	1
≥100	2
≥1 000	3
≥10 000	4
≥100 000	5
≥1 000 000	6
≥10 000 000	7

FAILURE FREQ	CODE		%/YR (median)
1/100 000	A	=	.001
1/50 000	B	=	.002
1/20 000	C	=	.005
1/10 000	D	=	.01
1/5 000	E	=	.02
1/2 000	F	=	.05
1/1 000	G	=	.1
1/500	H	=	.2
1/200	I	=	.5
1/100	J	=	1.0+

For further explanation of this code, see page 9-27.

TRANSISTORS (CONT)

FIELD EFFECT (DUALS AND PAIRS)

STATIC SENSITIVE

THIS APPLIES TO ALL DEVICES ON THIS PAGE

7

GROUP A	N Channel, JFETs. Family Type: 2N3684 $F_t \left(\frac{G_m}{2\pi c}\right)$ = 90 MHz	Typical Specs: I_{DSS} 2.5 to 7.5 Ma; V_p 5V MAX; G_m 1000 to 3000 µMHOS; C_{ISS} 4 pF MAX; C_{RSS} 1.2 pF MAX

LINE	I_{DSS} (mA)	VP MAX	G_m (MIN) µMHOS	I_G (pA) or *I_{GSS}	OFFSET / DRIFT	@ CONDITIONS	† CASE STYLE	** ND	CC	†† RC	PART NUMBER	COMMENTS
1	1.5-7	6	1000	100	50mV / 150µV/°C	I_D = 1 mA, V_{GD} = 10 V	TO-71	A	J+	3F	151-1007-00	
2	1.5-7	6	1000	60	50mV / 150µV/°C	I_D = 1 mA, V_{GD} = 10 V	TO-71	A	K-	4G	151-1037-00	
3	.5-5	4.5	1000	50	5mV / 10µV/°C	I_D = .2 mA, V_{GD} = 6 V	TO-71	A	K+	3G	151-1047-00	
4	1.3 MIN	3	1000	100	50mV / 50µV/°C	I_D = 1 mA, V_{GD} = 10 V	TO-71	A	J	4G	151-1049-00	
5	1 - 5	3.5	1000	*500	100mV / 250µV/°C	I_D = .8 mA, V_{GD} = 10 V	TO-71	A	I+	4G	151-1054-00	FOR TO-78A CASE USE 151-1054-01

GROUP B	N Channel, JFETs. Family Type: 2N3822 $F_t \left(\frac{G_m}{2\pi c}\right)$ = 115 MHz	Typical Specs: I_{DSS} 2 to 10 Ma; V_p 10 V MAX; G_m 3000 to 6500 µMHOS; C_{ISS} 6 pF MAX; C_{RSS} 3 pF MAX

LINE	I_{DSS} (mA)	VP MAX	G_m (MIN) µMHOS	I_G (pA) or I_{GSS}	OFFSET / DRIFT	@ CONDITIONS	† CASE STYLE	** ND	CC	†† RC	PART NUMBER	COMMENTS
1	2 - 10	3	2000	75	50mV / 40µV/°C	I_D = 1.5 mA, V_{GD} = 5 V	TO-71	A	K+	3G	151-1010-00	
2	2 - 12	6	2000	40	50mV / 50µV/°C	500Ω Totem Pole Configuration	TO-71	A	K-	4E	151-1011-00	
3	2 - 10	3	3000	100	50mV / 100µV/°C	I_D = 1 mA, V_{GD} = 10 V	TO-71	A	K	3H	151-1029-00	SPECIAL GAIN SPEC.
4	2 - 10	6	2000	300	50mV / 100µV/°C	I_D = 1 mA, V_{GD} = 10 V	TO-71	A	J+		151-1041-00	
5	1.5-8	5	1200	100	25mV / 25µV/°C	I_D = 1 mA, V_{GD} = 10 V	TO-71	A	K	3G	151-1050-00	
6	2 - 10	3	2000	40	20mV / 20µV/°C	I_D = 1.5 mA, V_{GD} = 5 V	TO-71	A	K+	4G	151-1057-00	
7	1.3-10	4	1000	*100	7mV / 50µV/°C	I_D = 1 mA, V_{GD} = 8 V	TO-71	A	K+		151-1073-00	
8	2 - 5	6	1500	40	50mV / 50µV/°C	500Ω Totem Pole Configuration	TO-71	A	J+	3H	151-1081-00	MONOLITHIC

† FOR CASE DRAWINGS, SEE PAGES 9-2 THRU 9-8.

†† FOR RELIABILITY CODES, SEE PAGE 7-9.

TRANSISTORS (CONT)

STATIC SENSITIVE

THIS APPLIES TO ALL DEVICES ON THIS PAGE

FIELD EFFECT (DUALS AND PAIRS)

7

GROUP		
C	N Channel, JFETs. Family Type: 2N4393 $F_t \left(\frac{G_m}{2\pi c}\right)$ = 180 MHz	Typical Specs: I_{DSS} 5 to 35 Ma V_p 3.5 V MAX G_m 7.5 to 20mMHOS C_{ISS} 14 pF MAX C_{RSS} 3.5 pF MAX

LINE	I_{DSS} (mA)	VP MAX	G_m (MIN) µMHOS	I_G (pA) or *I_{GSS}	OFFSET / DRIFT @ CONDITIONS	† CASE STYLE	** ND	CC	†† RC	PART NUMBER	COMMENTS
1	5 - 30	3.5	10000	100	25mV / 25µV/°C @ I_D = 2 mA, V_{GD} = 20 V	TO-71	A	K+	3H	151-1027-00	
2	10 - 30	3	10000	200	100mV / 100µV/°C @ I_D = 2 mA, V_{GD} = 20 V	TO-71	A	K	4G	151-1036-00	
3	5 - 30	3	10000	100	25mV / 100µV/°C @ I_D = 2 mA, V_{GD} = 20 V	TO-71	A	L	1J	151-1046-00	
4	7 - 20	5	6500	*100		CHIP	A	J+		151-1058-00	2 DIE MATCHED
5	7 - 25	3.5	100	*100 *100		CHIP	A	H+		151-1064-00	DIE 2N4391

GROUP		
D	N Channel, JFETs. Family Type: 2N4416 $F_t \left(\frac{G_m}{2\pi c}\right)$ = 250 MHz	Typical Specs: I_{DSS} 5 to 15 Ma V_p 6 V MAX G_m 4500 to 7500 µMHOS C_{ISS} 4 pF MAX C_{RSS} 0.8 pF MAX

LINE	I_{DSS} (mA)	VP MAX	G_m (MIN) µMHOS	I_G (pA) or *I_{GSS}	OFFSET / DRIFT @ CONDITIONS	† CASE STYLE	** ND	CC	†† RC	PART NUMBER	COMMENTS
1	6 - 15	6	4500	100	50mV / 50µV/°C @ I_D = 5 mA, V_{GD} = 12 V	TO-71	A	K	4H	151-1031-00	
2	10 - 15	6	4500	*100	I_{DSS} MATCHED TO .5 mA @ V_{GD} = 15 V	TO-92	A	H	5H	151-1042-00	MATCHED PAIR
3	5.5-15	6	4500	*100	I_{DSS} MATCHED TO .5 mA @ V_{GD} = 15 V	TO-92	A	I		151-1070-00	MATCHED PAIR I_G & G_{OS} also matched
4	5.2-11.8	6	3600	*95	50mV	DIE FORM	A	K-		151-1144-00	2 DIE MATCHED 2N4416
5	10 - 15	10	4500	50	50mV / 100µV/°C @ I_D = 5 mA, V_{GD} = 10 V	TO-72C		K	3J	153-0559-00	MATCHED PAIR OF 2N4416

** NEW DESIGN RECOMMENDATION FROM COMPONENT EVALUATION ENGINEERING:
A = ACCEPTABLE
N = NOT RECOMMENDED

TRANSISTORS (CONT)

FIELD EFFECT (DUALS AND PAIRS)

STATIC SENSITIVE

THIS APPLIES TO ALL DEVICES ON THIS PAGE

7

GROUP		
E	N Channel, JFETs. Family Type: 2N5397 $F_t \left(\frac{G_m}{2\pi c}\right) =$ 260 MHz	Typical Specs: I_{DSS} 7 to 35 Ma; V_p 6 V MAX; G_m 6 to 10mMHOS; C_{ISS} 5 pF MAX; C_{RSS} 1.2 pF MAX

LINE	I_{DSS} (mA)	VP (MAX)	G_m (MIN) µMHOS	I_G (pA) or *I_{GSS}	OFFSET / DRIFT	@ CONDITIONS	† CASE STYLE	** ND	CC	†† RC	PART NUMBER	COMMENTS
1	7 - 20	5	6500	100	50mV / 50µV/°C	20Ω Totem Pole Configuration	TO-78A	A	K	4G	151-1032-00	
2	12 - 20	5	6500	100	50mV / 50µV/°C	20Ω Totem Pole Configuration	TO-78A	A	K		151-1071-00	
3	7 - 20	5	6500	100	50mV / 25µV/°C	Special bias Condition	TO-78A	A	K+		151-1082-00	
4	7 - 25	5	6500	100	50mV / 50µV/°C	20Ω Totem Pole Configuration	TO-99A	A	J+	4G	151-1090-00	MONOLITHIC
5	7 - 25	3.5	6500	100	50mV / 50µV/°C	20Ω Totem Pole Configuration	TO-99A	A	J+	3F	151-1090-02	MONOLITHIC
6	7 - 25	3.5	6500	100	50mV / 50µV/°C	20Ω Totem Pole Configuration	TO-99A	A	K-	4E	151-1090-04	MONOLITHIC
7	2mA Min @ V_{GS} = .8V	3.7	2500 @ I_D = 2mA	*1000	25mV / 50µV/°C	I_D = 2 mA, V_{DG} = 4	UNMNTD	A	H		151-1099-00	MONOLITHIC DIE
8	9 - 20	5	6500	*100	50mV	I_D = 8 mA, V_{DG} = 5	UNMNTD	A	J+		151-1100-00	2 DIE ON SUBSTRATE
9	7 - 25	5	6500	100	50mV / 50µV/°C	20Ω Totem Pole Configuration	TO-99A	N	J+		151-1115-00	SAME AS 151-1090-00 Except National only
10	2mA Min @ V_{GS} = .8V	3.7	2500 @ I_D = 2mA	*1000	25mV / 50µV/°C	I_D = 2 mA, V_{DG} = 4	UNMNTD	A	I		151-1145-00	MONOLITHIC DIE IMPROVED -1099

GROUP F — MISCELLANEOUS DUAL FETS

LINE		TYPE	OFFSET AND DRIFT	CASE STYLE	** ND	CC	†† RC
1	151-1077-00	N-CHANNEL, JFET (2N5908)					
	I_{DSS} = 30-500 µA V_p = .6-4.5 G_m = 70-250µMHOS	I_G = 1.0 pA C_{ISS} = 3.0 pF C_{RSS} = 1.5 pF	15mV / 40=V/°C @ I_D = 30µA, V_{DG} = 10	TO-78	A	K-	
2	151-1102-00	N-CHANNEL, JFET (U431)					
	I_{DSS} = 24-60 mA V_p = 2-6 G_m = 10-20 mMHOS	I_{GSS} = 1.0 pA C_{gs} = 5.0 pF C_{gd} = 2.5 pF	10% Match of I_{DSS}, V_p, G_m	TO-99	A	L	
3	151-1117-00	N-CHANNEL, DMOS (MD1000)					
	G_m = 12-18mMHOS V_{TH} = .5-1.5 VOLTS	C_{ISS} = 5.5 pF C_{RSS} = 2.0 pF C_{OSS} = 2.5 pF	50mV / 25µV/°C @ I_D = 7.5mA, V_{DS} = 1.7, V_{SB} = 12V	TO-99C	A	K	4H

COST CODE

(CC COLUMN)

CODE	≈ VALUE with -	≈ VALUE no suffix	≈ VALUE with +
A	.2¢	.5¢	.75¢
B	1.25¢	1.5¢	2¢
C	2.5¢	3¢	3.75¢
D	4.25¢	5¢	6¢
E	7¢	8¢	10¢
F	13¢	15¢	18¢
G	22¢	25¢	35¢
H	40¢	50¢	60¢
I	65¢	75¢	$1
J	$1.25	$1.50	$2
K	$2.50	$3	$3.75
L	$4.25	$5	$6
M	$7	$8	$10
N	$13	$15	$18
O	$22	$25	$35+

NOTE: Costs may vary from order to order due to order quantities, vendor, etc.

** NEW DESIGN RECOMMENDATION FROM COMPONENT EVALUATION ENGINEERING:

A = ACCEPTABLE
N = NOT RECOMMENDED

† FOR CASE DRAWINGS, SEE PAGES 9-2 THRU 9-8.

TRANSISTORS (CONT)
FIELD EFFECT

†† CATALOG RELIABILITY CODES

USAGE/YR	CODE
≥10	1
≥100	2
≥1 000	3
≥10 000	4
≥100 000	5
≥1 000 000	6
≥10 000 000	7

FAILURE FREQ	CODE		%/YR (median)
1/100 000	A	=	.001
1/50 000	B	=	.002
1/20 000	C	=	.005
1/10 000	D	=	.01
1/5 000	E	=	.02
1/2 000	F	=	.05
1/1 000	G	=	.1
1/500	H	=	.2
1/200	I	=	.5
1/100	J	=	1.0+

For further explanation of this code, see page 9-27.

COST CODE
(CC COLUMN)

CODE	≈ VALUE with -	≈ VALUE no suffix	≈ VALUE with +
A	.2¢	.5¢	.75¢
B	1.25¢	1.5¢	2¢
C	2.5¢	3¢	3.75¢
D	4.25¢	5¢	6¢
E	7¢	8¢	10¢
F	13¢	15¢	18¢
G	22¢	25¢	35¢
H	40¢	50¢	60¢
I	65¢	75¢	$1
J	$1.25	$1.50	$2
K	$2.50	$3	$3.75
L	$4.25	$5	$6
M	$7	$8	$10
N	$13	$15	$18
O	$22	$25	$35+

NOTE: Costs may vary from order to order due to order quantities, vendor, etc.

I_{DSS}	-	Drain to Source Saturation Current
V_P	-	Pinchoff Voltage
C_{ISS}	-	Small Signal, Common Source, Short Circuit Input Capacitance
C_{RSS}	-	Small Signal, Common Source, Short Circuit Reverse Transfer Capacitance
G_m	-	Transconductance
V_{DG}	-	Drain to Gate Voltage
I_D	-	Drain Current
I_G	-	Gate Current, Channel Current Flowing
I_{GSS}	-	Gate Current, Source Shorted to Drain
BV_{DS}	-	Drain-to-source Breakdown Voltage
R_{ON}	-	Drain-to-source Resistance
V_{TH}	-	Threshold Voltage

TRANSISTORS (CONT)

FIELD EFFECT (FOR REFERENCE ONLY)

DO NOT USE IN NEW DESIGN

7

PART NUMBER	VENDOR #	ST	OTHER	CASE STYLE	I_{DSS} RANGE MIN mA	I_{DSS} RANGE MAX mA	V_P MAX (V)	C_{ISS} / C_{RSS} (pF)	G_m @ V_{DG} & I_D µMHOS or *R_{ON}	V_{DG} (V)	I_D mA	I_G @ V_{DG} @ I_D I_{GSS} pA	@ V_{GS} (V)	I_D mA	V_{DG} MIN (V)
151-1001-00	U274A	NP	FETS singles, N-channel, junction	TO-89	1.	3.	3.	3.2 / .5	1000	10	I_{DSS}	100. / 100.	12.5	1.	20
151-1003-00	SU-2080	CS	N-channel, MOS/DP	TO-71	1.	3.5	4.	18.	1500	10	.7	.500	10.	.7	50
151-1008-00	D/UC 210	CS	FET, dual & pair, N-channel, junction	TO-78	4.	12.	4.	7. / 2.	4500			.050 / .050	15. / 15.	4.	50
151-1009-00	D/UC 210	CS	FET, dual & pair, N-channel, junction	TO-71	5.5	12.	4.	7. / 2.	3500	12	5.	.100 / .100	12. / 12.	5.	35
151-1013-00	SU-2181	CS	FET, dual & pair, N-channel, junction	TO-71	1.	6.	4.	25. / 10.	1300 / 1000	2.5 / 15	.3	.500 / .500	2.5 / 2.5	.300	30
151-1014-00	2N4220	CS	FET, single, N-channel	TO-72C	.5	3.	4.	6. / 2.	1000	15	DSS	100. / 100.	15. / 15.	I_{DSS}	50
151-1016-00	2N4304Fmly	DL	FET, N-channel	TO-72	5.	15.	8.	6. / 2.	1000	15	I_{DSS}	100. / 100.	15. / 15.	5.	50
151-1017-00	F1333	LR	FET, single, N-channel	µ23B				8. / 2.	1000	20	.35	/ 100.	/ 30.		50
151-1019-00	SU-2235	CS	FET, dual & pair, N-channel, junction	TO-71	1.5	8.	5.	25. / 6.	1200	20	1.	.100	20.	1.	50
151-1020-00	FN-7428	NP	FET, dual & pair, N-	TO-71	2.5	8.	5.	25. / 6.	1500	20	2.	.150	20.	1.	50
151-1023-00	2N4417	LR	FETS, single, N-channel, junction	Pill µ-23B	5.	15.	6.	3.5	4500	15	I_{DSS}	/ .100	/ 20.		
151-1024-00	2N4352Fmly	CR	FETS, single, N-channel, junction	µT	5.	15.	6.	4. / 8.	4500	15		10mA / 100.	/ 20.		30
151-1030-00	2N138	CR	MOS FET, N-channel	TO-72E		15.	3.	5. / .25	6	12		/ 10.			
151-1033-00	2N6027	DL		TO-980											
151-1034-00	D/2N4417	CR	Dual & pair, N-channel, junction	CC-6	5.	12.	6.	3.5 / 1.3	3500	15	I_{DSS}	.100	7.	I_{DSS}	30
151-1035-00	D/2N4416	DL													
151-1040-00	2N140	CR	MOS FET, N-channel	TO-72F	5.	30.	4.	7. / .03	6	14	10.	1nA			
151-1044-00		OT	Dual & pair, N-channel	TO-71	.5	5.	4.5		1000			/ 50.			
151-1048-00	UC400Fmly	CR	FET, single, P-channel, junction	TO-106	4.	16.		8. / 3.				/ 5.	/ 20.		40
151-1055-00	3N159	CR	MOS FET, N-channel	TO-72F	5.	30.	4.	7. / .03	10	14	10.	1nA			
151-1060-00	D/UC 4001	DL	Dual & pair, P-channel, junction	TO-71			3.	9. / 2.5	1000	5	.25	.035	5.	.250	30
151-1061-00	E421	EN	Dual & pair, N-channel, junction	R-165	6.	30.		3.5 / .8	4500	10	5.	500. / 500.	10. / 15.	5.	25
151-1065-00	2N4800	OB	FET, single, N-channel, junction	TO-106											
151-1072-00	D/UC 400	LS	Dual & pair, P-channel, junction	TO-71			3.	9. / 2.5	1000	5	.25	.035	5.	.025	30
151-1079-00	MEM660/BK	LR	MOS FET, N-channel	TO-72C		10.	6.	7. / 1.	30Ω	6	1.	10nA			
151-1083-00	MP3731, SP2597	DL	PNP germanium	TO-3	1.	.5			15	3	6.	320.	320.	2.	10
151-1101-00	2N5565	NP	FET, N-channel	TO-71											
151-1104-00	SD220	CS	DMOS FET, N Channel	TO-39B		10.µA	40.	28. / 1.	200	15	100				
151-1105-00		CR	FET, dual, N-channel	TO-78	7.	20.	5.	5. / 1.5	7000	10	5.	100.	15.		

THE LISTING OF FETS WHICH ARE RECOMMENDED FOR USE ARE FOUND ON PAGES 7-2 THRU 7-6.

TRANSISTORS (CONT)

FIELD EFFECT (FOR REFERENCE ONLY)

DO NOT USE IN NEW DESIGN

PART NUMBER	VENDOR #	ST	OTHER	CASE STYLE	I_{DSS} RANGE MIN mA	I_{DSS} RANGE MAX mA	V_p MAX (V)	C_{ISS} / C_{RSS} (pF)	G_m @ V_{DG} & I_D: µMHOS or *R_{ON}	(V)	mA	I_G @ V_{DG} @ I_D: I_{GSS} pA	@ V_{GS} (V)	mA	V_{DG} MIN (V)
151-1107-00	2N4391	CR	FET, single	TO-46											
151-1113-00	2N4392Fmly	CR	FET, N-channel, junction	TO-92	25.	150.	10.	14.							
151-1123-00	2N4220	PP	FET, N-channel	TO-7											
151-1131-00	FN4582	PP	FET, N-channel	TO-72C	.03	.09	1.8	3./1.5							
151-1132-00		DL	FET, N-channel	TO-18C	5.	75.	4.	14./3.5							
151-1133-00		DL	FET, N-channel	TO-18C	1.	3.6	2.5	7./3.							
151-1134-00	FN4594	PP	FET, N-channel	TO-72C	.4	3.6	2.5	7./3.							
151-1138-00		PP	FET, N-Channel	DIE FORM				50./6.							

7

7

Limit the valley current in PUTs

Circuit designers sometimes run into difficulty when using parts that are typically much better than the data sheet specifications. A part that seems to be especially plagued by this problem is the Programmable Unijunction Transistor, PUT, (2N6027, 151-0508-00).

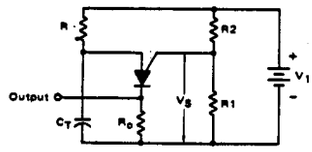

Typical Oscillator Circuit

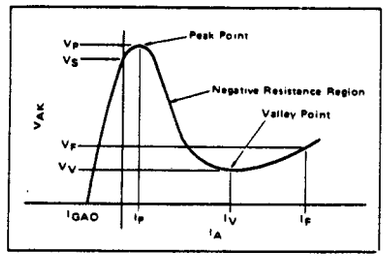

Static Characteristics

A parameter that is critical to the operation of relaxation oscillator circuits is the Valley Current. (See below) This is typically on the order of 300 μA for the PUT, but may be as low as 70 μA. So, the charging resistor R_T should be large enough to limit the current to 70 μA. The "rule of thumb" recommended by Motorola is to limit the current to half that amount.

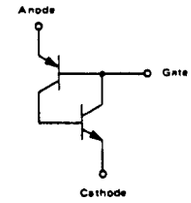

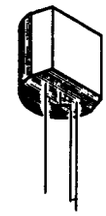

Transistor Equivalent

There have been questions about the terminal arrangement for the PUT. The recommended practice at Tektronix is to bend the center (gate) lead toward the flat side of the plastic case.

For copies of Motorola's application note on the "Theory, Characteristics and Applications of the Programmable Unijunction Transistor," contact me, Paul Johnson, ext. 2473, 78-552.

Unijunction transistor design guidelines

In the design of unijunction transistor (UJT) oscillators, the emitter resistor must be selected to provide less current than the valley current (I_V) of the UJT.

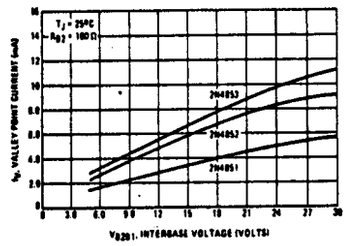

The UJT's used at Tektronix have I_V specified with V_{BB} = 20 volts.

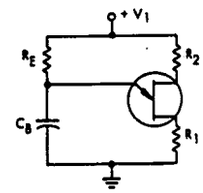

I_V is roughly proportional to V_{BB}, and this should be considered when designing oscillators for use in 5 volt circuits. The current that may be used in a 20 volt circuit is likely to cause a 5 volt circuit to latch up.

A Motorola application note on UJT timers and oscillators is available. If you can use a copy, call Paul Johnson, ext. 2473.

THYRISTORS

8

SCR

FORWARD CURRENT MAX AMPS RMS	FORWARD CURRENT MAX AMPS D.C.	FOR. + REV. BREAKOVER MIN VOLTS	I HOLD MAX mA	I^2T	GATE TRIGGER I MAX µA	GATE TRIGGER V MAX (V)	† CASE STYLE	JEDEC OR VENDOR NUMBER	PART NUMBER	** ND	CC	†† RC	OTHER
.5		200.	5.	.15	400.	0.8	TO-18	CB203	151-0529-00	A	I-	3G	
.8		30.	5.	.15	200.	0.8	TO-92	2N5060	151-0503-00	A	F	4F	
.8		150.	5.	.15	200.	0.8	TO-92	2N5063	151-0519-00	N	G+	3H	
2.7		200.	3.	.5	200.	0.8	TO-202	C106B2	151-0506-00	A	G	5E	Anode Lead Temperature 25°C
4.	2.6	600.	5.	2.6	200.	1.0	MU47	2N6241	151-0527-00	A	I-		
5.	1.7	200.	20.	15.	15.m	2.	TO-66	2N3228	151-0505-00	A	I		
8.		50.	40.	25.	30.m	1.5	Mu-10	2N4441	151-0515-01	A	I	4F	
8.		200.	30.	34.	25.m	1.5	TO-220	C122B	151-0521-00	A	I-	4E	
8.		200.	30.	34.	25.m	1.5	TO-220	C122B	151-0521-01	A	I+		Screened 24 hr., 100°C, 200V peak AC
12.5	8.	200. REV. 600. ROR.	50.	165.	40.m	2.	TO-3	2N3669	151-0507-00	A	J		
12.5	8.	600.	50.	165.	40.m	2.	TO-3	2N4103	151-0511-00	A	K-		
16.		50.	40.	100.	30.m	1.5	TO-220	2N6400	151-0528-00	A	I	4E	
35.	22.	100.	70.	300.	40.m	2.	SC-18	2N3896	151-0526-00	A	J+		
35.		1200.	100.	540.	40.m	2.2	TO-48	C137PB	151-0524-00	N	O+		IDRM or IRRM = 100µA Max. with VDRM or VVRM = 1200V
63.	40.	50.	70.	4000.	110.m	3.	TO-65	40C10B	151-0512-00	N	M	3I	

TRIAC

MAXIMUM CURRENT AMPS RMS	BREAKOVER MIN VOLTS	I HOLD MAX mA	I^2T	QUADRANTS I & III GATE TRIGGER I MAX mA	QUADRANTS I & III GATE TRIGGER V MAX (V)	† CASE STYLE	JEDEC OR VENDOR NUMBER	PART NUMBER	** ND	CC	†† RC	OTHER
.8	400.	20.		10.	2.0	TO-92	SC92D	151-0539-00		I		
6.	400.	50.	26.5	50.	2.5	TO-220	SC141DX164	151-0522-00	A	I+	4G	
6.5	400.	50.	26.5	50.	2.5	TO-220	SC140D	151-0532-00	A	I+		
8.	600.	60.	50.	25.	2.5	TO-220	T2800M	151-0538-00		I	4H	
10.	400.	50.	60.	50.	2.5	TO-220	SC146D	151-0537-00	A	I+	3H	
25.	400.	75.	260.	50.	2.5	SPECIAL	SC261DX24	151-0540-00		K+		Pressfit with brass bracket for crowbar circuit use only, not for power.

UNIJUNCTION

V_{B2B1} MAX.	V_{B2E} V	I_E RMS MAX.	η @ 10V	I_P µA (MAX)	I_V mA (MIN)	F MAX KHz (MIN)	Rbb @ 3V, V_{B2B1}	POWER AMB. mW	† CASE STYLE	JEDEC OR VENDOR NO.	PART NUMBER	** ND	CC	†† RC
35.	30.	50.	.56-.75	2.	2.	100.	4.7 to 9.1 k	300.	TO-72H	2N4851	151-0504-00	A	G+	4E
35.	30.	50.	.70-.85	2.	4.(V_V-2V)	100.	4.7 to 9.1 k	300.	TO-72H	2N4851	151-0504-01		I-	
35.	30.	50.	.70-.85	2.	4.	100.	4.7 to 9.1 k	300.	TO-72H	2n4852	151-0510-00	A	H	4E
35.	30.	50.	.70-.85	.4	6.	100.	4.7 to 9.1 k	300.	TO-72H	2N4853	151-0513-00	A	I	

PROGRAMMABLE

VOLTAGE A-K MAX.	ANODE CURRENT DC	ANODE CURRENT PEAK	DISCHARGE ENERGY MAX.	I_G MAX mA	F MAX	POWER AMB. mW	† CASE STYLE	JEDEC OR VENDOR NO.	PART NUMBER	** ND	CC	†† RC
40.V	150mA	2A	250 µJ	50.	100 kHz	300.	TO-98	2N6027	151-0508-00	A	G	5F
40.V	150mA	2A	250 µJ	50.	100 kHz	300.	TO-98	2N6027	151-0508-01	N	H-	4E

** NEW DESIGN CODE

A = Acceptable
N = Not Recommended
Blank = No Recommendation

†† RELIABILITY CODES

USAGE/YR	CODE
≥10	1
≥100	2
≥1 000	3
≥10 000	4
≥100 000	5
≥1 000 000	6
≥10 000 000	7

FAILURE FREQ	CODE	%/YR (median)
1/100 000	A	.001
1/50 000	B	.002
1/20 000	C	.005
1/10 000	D	.01
1/5 000	E	.02
1/2 000	F	.05
1/1 000	G	.1
1/500	H	.2
1/200	I	.5
1/100	J	1.0+

For further explanation of this code, see page 9-27.

COST CODE

(CC COLUMN)

CODE	A	B	C	D	E	F	G	H	I	J	K	L	M	N	O
≈ VALUE with +	.75¢	2¢	3.75¢	6¢	10¢	18¢	35¢	60¢	$1	$2	$3.75	$6	$10	$18	$35+
≈ VALUE no suffix	.5¢	1.5¢	3¢	5¢	8¢	15¢	25¢	50¢	75¢	$1.50	$3	$5	$8	$15	$25
≈ VALUE with -	.2¢	1.25¢	2.5¢	4.25¢	7¢	13¢	22¢	40¢	65¢	$1.25	$2.50	$4.25	$7	$13	$22

NOTE: Costs may vary from order to order due to order quantities, vendor, etc.

† FOR CASE DRAWINGS, SEE PAGES 9-2 THRU 9-8.

SELECTED TRANSISTORS

AVOID USING SELECTED COMPONENTS IF POSSIBLE IN NEW DESIGN, SEE PAGE 9-33 (THESE ARE NOT STOCKED IN ENG STOCK)

FINISHED PART NUMBER	RAW STOCK	CHARACTERISTICS	CC	†† RC
151-0124-02	151-0124-00	1. I_{cbo} = 50 nA Max, V_{CB} = 75 V 2. I_{ebo} = 25 nA Max, V_{EB} = 4 V 3. BV_{ceo} = 120 V Min, I_{CE} = 10 mA, Max V = 200 V 4. BV_{cbo} = 120 V Min, I_{CB} = 100 µA, Max V = 200 V 5. h_{FE} = 35 Min, V_{CE} = 10 V, I_C = 100 µA 6. h_{FE} = 50 Min, V_{CE} = 10 V, I_C = 1000 µA 7. h_{FE} = 74.9 Min, V_{CE} = 10 V, I_C = 10 mA 8. h_{FE} = 100 Min, V_{CE} = 10 V, I_C = 150 mA 9. h_{FE} = 300 Max, V_{CE} = 10 V, I_C = 150 mA	I+	4D
151-0126-01	156-0126-00	1. I_{ces} = 2 nA Max, V_{CE} = 5 V 2. I_{cbo} = 10 nA Max, V_{CB} = 45 V 3. I_{ebo} = 10 nA Max, V_{EB} = 5 V 4. BV_{ceo} = 60 V Min, I_{CE} = 10 mA 5. BV_{cbo} = 60 V Min, I_{CB} = 10 µA 6. BV_{ebo} = 6 V Min, I_{EB} = 10 µA 7. h_{FE} = 30 Min, V_{CE} = 5 V, I_C = 1 µA 8. h_{FE} = 100 Min, V_{CE} = 5V, I_C = 10 µA 9. h_{FE} = 500 Max, V_{CE} = 5 V, I_C = 10 µA 10. h_{FE} = 175 Min, V_{CE} = 5 V, I_C = 100 µA 11. h_{FE} = 200 Min, V_{CE} = 5 V, I_C = 500 µA 12. h_{FE} = 250 Min, V_{CE} = 5 V, I_C = 1 mA 13. h_{FE} = 800 Max, V_{CE} = 5 V, I_C = 10 mA 14. V_{CE} = .35 V Max, I_C = 1000 µA, I_B = 100 µA 15. $V_{BE_{ON}}$ = .5 V Min, V_{CE} = 5 V, I_C = 100 µA 16. $V_{BE_{ON}}$ = .7 V Max, V_{CE} = 5 V, I_C = 100 µA	G	
151-0127-04	151-0127-00	1. I_{cbo} = 400 nA Max, V_{CB} = 20 V 2. I_{ces} = 50 nA Max, V_{CE} = 15 V 3. BV_{cbo} = 40 V Min, I_{CB} = 10 µA, Max DLV = 120 V 4. BV_{ceo} = 15 V Min, I_{CE} = 10 mA, Max DLV = 55 V 5. h_{FE} = 50 Min, V_{CE} = 1 V, I_C = 10 mA 6. h_{FE} = 20 Min, V_{CE} = 2 V, I_C = 100 mA 7. V_{CE} =.25 V Max, I_C = 10 mA, I_B = 1 mA 8. V_{BE} = .7 V Min, I_C = 10 mA, I_B = 1 mA 9. V_{BE} = .85 V Max, I_C = 10 mA, I_B = 1 mA 10. h_{FE} = 120 Max, V_{CE} = 1 V, I_C = 10 mA 11. BV_{ebo} = 4.5 V Min, I_{EB} = 10 µA, Max DLV - 14.5 V	G	4D

COST CODE

(CC COLUMN)

CODE	A	B	C	D	E	F	G	H	I	J	K	L	M	N	O
≈ VALUE with +	.75¢	2¢	3.75¢	6¢	10¢	18¢	35¢	60¢	$1	$2	$3.75	$6	$10	$18	$35+
≈ VALUE no suffix	.5¢	1.5¢	3¢	5¢	8¢	15¢	25¢	50¢	75¢	$1.50	$3	$5	$8	$15	$25
≈ VALUE with -	.2¢	1.25¢	2.5¢	4.25¢	7¢	13¢	22¢	40¢	65¢	$1.25	$2.50	$4.25	$7	$13	$22

NOTE: Costs may vary from order to order due to order quantities, vendor, etc.

†† CATALOG RELIABILITY CODES

USAGE/YR	CODE
≥10	1
≥100	2
≥1 000	3
≥10 000	4
≥100 000	5
≥1 000 000	6
≥10 000 000	7

FAILURE FREQ	CODE		%/YR (median)
1/100 000	A	=	.001
1/50 000	B	=	.002
1/20 000	C	=	.005
1/10 000	D	=	.01
1/5 000	E	=	.02
1/2 000	F	=	.05
1/1 000	G	=	.1
1/500	H	=	.2
1/200	I	=	.5
1/100	J	=	1.0+

For further explanation of this code, see page 9-27.

SELECTED TRANSISTORS (CONT)

AVOID USING SELECTED COMPONENTS IF POSSIBLE IN NEW DESIGN, SEE PAGE 9-33 (THESE ARE NOT STOCKED IN ENG STOCK)

8

FINISHED PART NUMBER	RAW STOCK	CHARACTERISTICS	CC	TT RC
151-0188-03	151-0188-00	1. I_{ces} = 50 nA Max, V_{CE} = 38 V 2. I_{cev} = 50 nA Max, V_{CE} = 30 V, V_{EB} = 3 V 3. I_{BEV} = 50 nA Max, V_{BE} = 30 V, V_X = 3 V 4. BV_{cbo} = 40 V Min, I_{CB} = 10 μA, MAX DLV - 120 V 5. BV_{ceo} = 40 V Min, I_{CE} = 1 mA, Max DLV = 120 V 6. BV_{ebo} = 5 V Min, I_{EB} = 10 μA, Max DLV = 15 V 7. h_{FE} = 60 Min, V_{CE} = 1 V, I_C = 100 μA 8. h_{FE} = 80 Min, V_{CE} = 1 V, I_C = 1 mA 9. h_{FE} = 100 Min, V_{CE} = 1 V, I_C = 10 mA 10. h_{FE} = 300 Max, V_{CE} = 1 V, I_C = 10 mA 11. h_{FE} = 60 Min, V_{CE} = 1 V, I_C = 50 mA 12. h_{FE} = 30 Min, V_{CE} = 1 V, I_C = 100 mA 13. V_{BE} = .65 V Min, I_C = 10 mA, I_B = 1 mA 14. V_{BE} = .85 V Max, I_C = 10 mA, I_B = 1 mA 15. V_{BE} = .95 V Max, I_C = 50 mA, I_B = 5 mA 16. V_{CE} = .25 V Max, I_C = 10 mA, I_B = 1000 μA 17. V_{CE} = .4 V Max, I_C = 50 mA, I_B = 5 mA	E	5D
151-0190-05	151-0190-00	1. I_{ces} = 50 nA Max, V_{CE} = 38 V 2. I_{cev} = 50 nA Max, V_{CE} = 40 V, V_{OB} = 3 V 3. I_{bev} = 50 nA Max, V_{BE} = 40 V, V_{OB} = 3 V 4. BV_{ceo} = 40 V Min, I_{CE} = 1 mA, Max DLV = 120 V 5. BV_{cbo} = 60 V Min, I_{CB} - 10 μA, Max DLV = 180 V 6. BV_{ebo} = 6 V Min, I_{EB} = 10 μA, Max DLV = 26 V 7. V_{CE} = .2 V Max, I_C = 10 mA, I_B = 1000 μA 8. V_{CE} = .3 V Max, I_C = 50 mA, I_B = 5 mA 9. V_{BE} = .85 V Max, I_C = 10 mA, I_B = 1000 μA 10. V_{BE} = .95 V Max, I_C = 50 mA, I_B = 5 mA 11. h_{FE} = 40 Min, V_{CE} = 1 V, I_C = 100 μA 12. h_{FE} = 69.9 Min, V_{CE} = 1 V, I_C = 1 mA 13. h_{FE} = 100 Min, V_{CE} = 1 V, I_C = 10 mA 14. h_{FE} = 400 Max, V_{CE} = 1 V, I_C = 10 mA 15. h_{FE} = 60 Min, V_{CE} = 1 V, I_C = 50 mA 16. h_{FE} = 30 Min, V_{CE} = 1 V, I_C = 100 mA 17. h_{FE} = 100 Min, V_{CB} = 10 V, I_E = 1 mA 18. h_{FE} = 400 Max, V_{CB} = 10 V, I_E = 1 mA	E	5C
151-0192-03	151-0192-00	1. I_{cbo} = 50 nA Max, V_{CB} = 30 V 2. I_{ces} = 50 nA Max, V_{CE} = 38 V 3. BV_{ebo} = 4 V Min, I_{EB} = 10 μA, Max DLV = 24 V 4. BV_{ceo} = 25 V Min, I_{CE} = 500 μA, Max DLV = 105 V 5. h_{FE} = 300 Min, V_{CE} = 10 V, I_C = 2 mA 6. h_{FE} = 600 Max, V_{CE} = 10 V, I_C = 2 mA 7. V_{CE} = .5 V Max, I_C = 50 mA, I_B = 5 mA 8. h_{FE} = 150 Min, V_{CE} = 10 V, I_C = 100 μA	E+	5D

SELECTED TRANSISTORS (CONT)

AVOID USING SELECTED COMPONENTS IF POSSIBLE IN NEW DESIGN, SEE PAGE 9-33 (THESE ARE NOT STOCKED IN ENG STOCK)

FINISHED PART NUMBER	RAW STOCK	CHARACTERISTICS	CC	†† RC
151-0198-02	151-0198-00	1. I_{cbo} = 10 nA Max, V_{CB} = 15 V 2. BV_{cbo} = 30 V Min, I_{CB} = 1 μA, Max DLV = 110 V 3. BV_{ebo} = 3 V Min, I_{EB} = 10 μA, Max DLV = 23 V 4. h_{FE} = 40 Min, V_{CE} = 1 V, I_C = 3 mA 5. V_{BE} = 1 V Max, I_C = 10 mA, I_B = 1 mA 6. BV_{ceo} = 15 V Min, I_{CE} = 3 mA, Max DLV = 55 V 7. V_{CE} = .40 V Max, I_C = 10 mA, I_B = 1 mA 8. I_{ces} = 10 nA Max, V_{CE} = 25 V	F-	
151-0199-02	151-0199-00	1. I_{ces} = 10 nA Max, V_{CE} = 10 V 2. BV_{ceo} = 12 V Min, I_{CE} = 10 mA, Max DLV = 52 V 3. BV_{ces} = 12 V Min, I_{CE} = 100 μA, Max DLV = 52 V 4. BV_{cbo} = 12 V Min, I_{CB} = 100 μA, Max DLV = 52 V 5. BV_{ebo} = 4 V Min, I_{EB} = 100 μA, Max DLV = 14 V 6. V_{CE} = .2 V Max, I_C = 10 mA, I_B = 1 mA 7. V_{CE} = .6 V Max, I_C = 50 mA, I_B = 50 mA 8. V_{BE} = .75 V Min, I_C = 10 mA, I_B = 500 μA 9. V_{BE} = .95 V Max, I_C = 10 mA, I_B = 500 μA 10. V_{BE} = .8 V Min, I_C = 10 mA, I_B = 1 mA 11. V_{BE} = 1 V Max, I_C = 10 mA, I_B = 1 mA 12. V_{BE} = 1.5 V Max, I_C = 50 mA, I_B = 5 mA 13. h_{FE} = 30 Min, V_{CE} = .3 V, I_C = 10 mA 14. h_{FE} = 120 Max, V_{CE} = .3 V, I_C = 10 mA 15. h_{FE} = 20 Min, V_{CE} = 1 V, I_C = 50 mA	E	
151-0208-04	151-0208-02	1. C_{ob} ≤ 30 pF, V_{CB} = 10 V 2. C_{Ib} ≤ 110 pF, V_{EB} = .5 V 3. BV_{cbo} ≥ 90 V ≤ 130 V, I_{CB} = 100 μA 4. BV_{ebo} ≥ 7 V ≤ 17 V, I_{EB} = 100 μA 5. BV_{cev} ≥ 85 V ≤ 105 V, I_{CE} = 20 mA, V_X = 1.5 V 6. BV_{cer} = ≥ 85 V, I_{CE} = 20 mA, R_X = .2 k 7. BV_{ceo} = ≥ 75 V ≤ 95 V, I_{CE} = 20 mA 8. V_{CE} = ≤ .65 V, I_C = 150 mA, I_B = 15 mA 9. I_{cbo} = ≤ 20 nA, V_{CB} = 60 V 10. I_{ceo} = ≤ 500 nA, V_{CE} = 33 V 11. I_{ebo} = ≤ 20 nA, V_{EB} = 5 V 12. I + h_{FE} I_B = 5 μA Max, V_{CB} = 10 V, I_E = 100 μA 13. h_{FE} = ≥ 40, V_{CE} = 10 V, I_C = 150 mA 14. h_{FE} = ≤ 140.2, V_{CE} = 10 V, I_C = 150 mA 15. h_{FE} = ≥ 20, V_{CE} = 10 V, I_C = 500 mA	H	

†† FOR RELIABILITY CODES, SEE PAGE 8-2.

SELECTED TRANSISTORS (CONT)

AVOID USING SELECTED COMPONENTS IF POSSIBLE IN NEW DESIGN, SEE PAGE 9-33 (THESE ARE NOT STOCKED IN ENG STOCK)

8

FINISHED PART NUMBER	RAW STOCK	CHARACTERISTICS	CC	++ RC
151-0211-02	151-0211-01	1. $I_{ebo} \leq 100$ nA, $V_{EB} = 3$ V 2. $I_{cbo} \leq 10$ nA, $V_{CB} = 50$ V 3. $I_{ces} \leq 100$ nA, $V_{CE} = 50$ V 4. $I_{ceo} \leq 1$ µA, $V_{CE} = 28$ V 5. $V_{CE(sat)} \leq .5$ V, $I_C = 50$ mA, $I_B = 5$ mA 6. $h_{FE} \geq 50$, $I_C = 50$ mA, $V_{CE} = 5$ V 7. $h_{FE} \leq 150$, $I_C = 50$ mA, $V_{CE} = 5$ V 8. $V_{CE(sat)} \geq .1$ V, $I_C = 50$ mA, $I_B = 5$ mA 9. $V_{BE(sat)} \geq .6$ V, $I_C = 50$ mA, $I_B = 5$ mA 10. Power Stress Test = 35 V @ 100 mA ≤ 5 sec.	J-	3H
151-0216-02	151-0216-00	1. $I_{cbo} = 50$ nA Max, $V_{CB} = 20$ V 2. $BV_{ebo} = 4$ V Min, $I_{EB} = 10$ µA, Max DLV = 24 V 3. $h_{FE} = 150$ Min, $V_{CE} = 10$ V, $I_C = 100$ µA 4. $BV_{ceo} = 25$ V Min, $I_{CE} = 500$ µA, Max DLV = 105 V 5. $h_{FE} = 600$ Max, $V_{CE} = 10$ V, $I_C = 2$ mA 6. $h_{FE} = 300$ Min, $V_{CE} = 10$ V, $I_C = 2$ mA 7. $V_{CE} = .5$ V Max, $I_C = 25$ mA, $I_B = 2.5$ mA 8. $I_{ces} = 50$ nA Max, $V_{CE} = 23$ V	E+	5B
151-0220-04	151-0220-00	1. $C_{ob} = \leq 4.5$ pF, $V_{CB} = 5$ V 2. $C_{IB} = \leq 8$ pF, $V_{EB} = .5$ V 3. $BV_{cbo} = \geq 40$ V ≤ 60 V, $I_{CB} = 10$ µA 4. $BV_{ces} \geq 40$ V ≤ 60 V, $I_{CE} = 10$ µA 5. $BV_{ceo} = \geq 40$ V ≤ 60 V, $I_{CE} = 10$ mA 6. $BV_{ebo} \geq 5$ V ≤ 15 V, $I_{EB} = 10$ µA 7. $I_{ces} = \leq 25$ nA, $V_{CE} = 30$ V 8. $I_{ces} = \leq 50$ nA, $V_{CE} = 38$ V 9. $I + h_{FE}$ $I_B = \leq 1666$ nA, $V_{CB} = 1$ V, $I_E = 100$ µA 10. $D_x = h_{FE}$ 60 min tests #C, 11 ABS ratio const .100 V 11. $h_{FE} = \geq 80$, $V_{CE} = 1$ V, $I_C = 1000$ µA 12. $h_{FE} = \geq 100$, $V_{CE} = 1$ V, $I_C = 10$ mA 13. $h_{FE} = \leq 300$, $V_{CE} = 1$ V, $I_C = 10$ mA 14. $h_{FE} \geq 30$, $V_{CE} = 1$ V, $I_C = 50$ mA 15. $V_{CE} = .13$ V Max, $I_C = 1000$ µA, $I_B = 100$ µA 16. $V_{CE} = .14$ V Max, $I_C = 10$ mA, $I_B = 1000$ µA 17. $V_{CE} = .3$ V Max, $I_C = 50$ mA, $I_B = 5$ mA 18. $V_{BE} = .75$ V Max, $I_C = 1000$ µA, $I_B = 100$ µA 19. $V_{BE} = .7$ V Max, $I_C = 10$ mA, $I_B = 1000$ µA 20. $V_{BE} = .9$ V Max, $I_C = 10$ mA, $I_B = 1000$ µA 21. $V_{BE} = 1.1$ V Max, $I_C = 50$ mA, $I_B = 5$ mA	F	
151-0220-05	151-0220-05	1. Burn-in for 72 hours 2. 100% electrical (same as 151-0220-04)	G-	

SELECTED TRANSISTORS (CONT)

AVOID USING SELECTED COMPONENTS IF POSSIBLE IN NEW DESIGN, SEE PAGE 9-33 (THESE ARE NOT STOCKED IN ENG STOCK)

FINISHED PART NUMBER	RAW STOCK	CHARACTERISTICS	CC	†† RC
151-0221-05	151-0221-00	1. Burn-in 2. C_{ob} = ≤ 3 pF, V_{CB} = 5 V 3. C_{IB} = ≤ 3.5 pF, V_{EB} = .5 V 4. BV_{cbo} = ≥ 12 V, I_{CB} = 100 μA 5. BV_{ces} = ≥ 12 V, I_{ces} = 100 μA 6. BV_{ceo} = ≥ 12 V, I_{CE} = 3 mA 7. BV_{ebo} = ≥ 4.5 V ≤ 14.5 V, I_{EB} = 100 μA 8. I_{ces} = ≤ 10 nA, V_{CE} = 10 V 9. V_{BE} = ≤ 1.5 V, I_C = 50 mA, I_B = 5 mA 10. V_{BE} = ≥ .73 V, I_C = 10 mA, I_B = 1000 μA 11. V_{BE} = ≤ .95 V, I_C = 10 mA, I_B = 1000 μA 12. V_{CE} = ≤ .5 V, I_C = 50 mA, I_B = 5 mA 13. V_{CE} = ≤ .15 V, I_C = 10 mA, I_B = 1000 μA 14. h_{FE} = ≥ 30, V_{CE} = 1 V, I_C = 50 mA 15. h_{FE} = ≥ 30, V_{CE} = .3 V, I_C = 10 mA 16. h_{FE} = ≤ 120, V_{CE} = .3 V, I_C = 10 mA 17. h_{FE} ≥ 15, V_{CE} = .5 V, I_C = 1000 μA	G	
151-0223-03	151-0223-00	1. I_{ces} = 400 nA Max, V_{CE} = 20 V 2. BV_{ces} = 40 V Min, I_{CE} = 10 μA, Max DLV = 120 V 3. BV_{ceo} = 15 V Min, I_{CE} = 10 mA, Max DLV = 55 V 4. BV_{cbo} = 40 V Min, I_{CB} = 10 μA, Max DLV = 120 V 5. I_{ebo} = 10 μA Max, V_{EB} = 4.5 V 6. V_{BE} = .72 V Min, I_C = 10 mA, I_B = 1 mA 7. V_{BE} = .85 V Max, I_C = 10 mA, I_B = 1 mA 8. V_{BE} = 1.15 V Max, I_C = 30 mA, I_B = 3 mA 9. V_{BE} = 1.6 V Max, I_C = 100 mA, I_B = 10 mA 10. V_{CE} = .2 V Max, I_C = 10 mA, I_B = 1 mA 11. V_{CE} = .18 V Max, I_C = 10 mA, I_B = 3.3 mA 12. V_{CE} = .25 V Max, I_C = 30 mA, I_B = 3 mA 13. V_{CE} = .5 V Max, I_C = 100 mA, I_B = 10 mA 14. h_{FE} = 35 Min V_{CE} = 1 V, I_C = 10 mA 15. h_{FE} = 120 Max, V_{CE} = 1 V, I_C = 10 mA 16. h_{FE} = 30 Min, V_{CE} = .4 V, I_C = 30 mA 17. h_{FE} = 18 Min, V_{CE} = 1 V, I_C = 100 mA	F-	

COST CODE

(CC COLUMN)

CODE	A	B	C	D	E	F	G	H	I	J	K	L	M	N	O
≈ VALUE with +	.75¢	2¢	3.75¢	6¢	10¢	18¢	35¢	60¢	$1	$2	$3.75	$6	$10	$18	$35+
≈ VALUE no suffix	.5¢	1.5¢	3¢	5¢	8¢	15¢	25¢	50¢	75¢	$1.50	$3	$5	$8	$15	$25
≈ VALUE with -	.2¢	1.25¢	2.5¢	4.25¢	7¢	13¢	22¢	40¢	65¢	$1.25	$2.50	$4.25	$7	$13	$22

NOTE: Costs may vary from order to order due to order quantities, vendor, etc.

†† CATALOG RELIABILITY CODES

USAGE/YR	CODE
≥10	1
≥100	2
≥1 000	3
≥10 000	4
≥100 000	5
≥1 000 000	6
≥10 000 000	7

FAILURE FREQ	CODE		%/YR (median)
1/100 000	A	=	.001
1/50 000	B	=	.002
1/20 000	C	=	.005
1/10 000	D	=	.01
1/5 000	E	=	.02
1/2 000	F	=	.05
1/1 000	G	=	.1
1/500	H	=	.2
1/200	I	=	.5
1/100	J	=	1.0+

For further explanation of this code, see page 9-27.

SELECTED TRANSISTORS (CONT)

AVOID USING SELECTED COMPONENTS IF POSSIBLE IN NEW DESIGN, SEE PAGE 9-33 (THESE ARE NOT STOCKED IN ENG STOCK)

8

FINISHED PART NUMBER	RAW STOCK	CHARACTERISTICS	CC	†† RC
151-0224-02	151-0224-00	1. I_{ces} = 50 nA Max, V_{CE} = 38 V 2. I_{cev} = 50 nA Max, V_{CE} = 30 V, V_x = 3 V 3. I_{bev} = 50 nA Max, V_{BE} = 30 V, V_x = 3 V 4. I_{ebo} = 10 nA Max, V_{EB} = 6 V 5. BV_{ceo} = 40 V Min, I_{CE} = 1 mA, Max DLV = 120 V 6. BV_{cbo} = 60 V Min, I_{CB} = 10 µA, Max DLV = 180 V 7. V_{CE} = .2 V Max, I_C = 10 mA, I_B = 1 mA 8. V_{CE} = .3 V Max, I_C = 50 mA, I_B = 5 mA 9. V_{BE} = .85 V Max, I_C = 10 mA, I_B = 1 mA 10. V_{BE} = .95 V Max, I_C = 50 mA, I_B = 5 mA 11. h_{FE} = 40 Min, V_{CE} = 1 V, I_C = .1 mA 12. h_{FE} = 70 Min, V_{CE} = 1 V, I_C = 1 mA 13. h_{FE} = 100 Min, V_{CE} = 1 V, I_C = 10 mA 14. h_{FE} = 400 Max, V_{CE} = 1 V, I_C = 10 mA 15. h_{FE} = 60 Min, V_{CE} = 1 V, I_C = 50 mA 16. h_{FE} = 30 Min, V_{CE} = 1 V, I_C = 100 mA	F-	
151-0270-03	151-0270-00	1. Burn in for 72 hours 2. $C_{ob} \leq 6$ pF, V_{CB} = 10 V 3. $BV_{ceo} \geq 150$ V, I_{CE} = 10 mA 4. $BV_{ebo} \geq 3.5$ V, I_{EB} = 10 µA 5. $I_{ceo} \leq 1000$ nA, V_{CB} = 140 V 6. $I_{ebo} \leq 1000$ nA, V_{EB} = 3 V 7. $I_{ceo} \leq 100$ µA, V_{CE} = 120 V 8. $h_{FE} \geq 40$, V_{CE} = 10 V, I_C = 10 mA 9. $V_{CE} \leq .6$ V, I_C = 10 mA, I_B = 1000 µA 10. $BV_{cbo} \geq 150$ V, I_{CB} = 10 µA	I-	

SELECTED TRANSISTORS (CONT)

AVOID USING SELECTED COMPONENTS IF POSSIBLE IN NEW DESIGN, SEE PAGE 9-33 (THESE ARE NOT STOCKED IN ENG STOCK)

FINISHED PART NUMBER	RAW STOCK	CHARACTERISTICS	CC	†† RC
151-0274-01	151-0274-00	1. Burn-in for 72 hours 2. C_{ob} = ≤ 4.5 pF, V_{CB} = 40 V 3. BV_{cbo} = ≥ 150 V ≤ 170 V, I_{CB} = 100 μA 4. BV_{ceo} = ≥ 150 V ≤ 170 V, I_{CE} = 10 mA 5. I_{cbo} = ≤ 50 nA, V_{CB} = 40 V 6. h_{FE} = ≥ 50, V_{CE} = 20 V, I_C = 10 mA 7. I_{ebo} = ≤ 50 nA, V_{EB} = 3.5 V	J+	
151-0279-02	151-0279-01	1. Preconditioning 48 hours @ + 250 V 2. $V_{CED(sus)}$ ≥ 300 V, I_C = 5 mA 3. h_{FE} ≥ 20, V_{CE} = 20 V, I_V = 1 mA 4. h_{FE} ≥ 40, V_{CE} = 20 V, I_C = 10 mA 5. h_{FE} ≥ 40, V_{CE} = 20 V, I_C = 30 mA 6. $V_{CE(sat)}$ ≤ 1 V, I_C = 20 mA, I_B = 2 mA 7. $V_{BE(sat)}$ ≤ .85 V, I_C = 20 mA, I_B = 2 mA 8. BV_{cbo} ≥ 300 V, I_C = 100 μA 9. BV_{ebo} ≥ 7 V, I_E = 100 μA 10. I_{cbo} ≤ 100 nA, V_{CB} = 200 V 11. I_{ebo} ≤ 100 nA, V_{BE} = 6 V	I+	
151-0279-03	151-0279-01	1. I_{ebo} = 100 nA Max, V_{EB} = 6.5 V 2. I_{cbo} = 100 nA Max, V_{CB} = 250 V 3. I_{ceo} = 1 μA Max, V_{CE} = 250 V 4. BV_{ceo} = 300 V Min, I_{CE} = 5 mA, Max DLV = 550 V 5. BV_{ceo} = 550 V Max, I_{CE} = 5 mA, Max DLV = 560 V 6. h_{FE} = 20 Min, V_{CE} = 20 V, I_C = 1 mA 7. h_{FE} = 40 Min, V_{CE} = 20 V, I_C = 10 mA 8. h_{FE} = 40 Min, V_{CE} = 20 V, I_C = 30 mA 9. h_{FE} = 240 Max, V_{CE} = 20 V, I_C = 30 mA 10. h_{FE} = 15 Min, V_{CE} = 20 V, I_C = 100 mA 11. V_{BE} = .65 V Min, I_C = 20 mA, I_B = 2 mA 12. V_{BE} = .8 V Max, I_C = 20 mA, I_B = 2 mA 13. V_{CE} = 1 V Max, I_C = 20 mA, I_B = 2 mA	H	4H
151-0285-01	151-0285-00	1. I_{cbo} ≤ 10 nA, V_{CB} = 50 V 2. I_{ces} ≤ 10 nA, V_{CE} = 50 V 3. $V_{CE(sat)}$ ≤ .5 V, I_C = 50 mA, I_B = 5 mA 4. I_{ebo} ≤ 10 nA, V_{EB} = 3 V 5. h_{FE} ≥ 50, I_C = 50 mA, V_{CE} = 5 V 6. h_{FE} ≤ 150, I_C = 50 mA, V_{CE} = 5 V 7. $V_{BE(sat)}$ ≤ 1 V, I_C = 50 mA, I_B = 5 mA 8. $V_{BE(sat)}$ ≥ .6 V, I_C = 50 mA, I_B = 5 mA 9. I_{ceo} ≤ 100 nA, V_{CE} = 28 V 10. Power Stress Test - 35 V + 100 mA, ≤ 5 sec.	K	
151-0293-01	151-0293-00	1. h_{FE} ≥ 30, V_{CE} = 1 V, I_C = 10 mA	K	3F

SELECTED TRANSISTORS (CONT)

AVOID USING SELECTED COMPONENTS IF POSSIBLE IN NEW DESIGN, SEE PAGE 9-33 (THESE ARE NOT STOCKED IN ENG STOCK)

8

FINISHED PART NUMBER	RAW STOCK	CHARACTERISTICS	CC	†† RC
151-0294-01	151-0294-00	1. $h_{FE} \geq 40$, $V_{CE} = 2$ V, $I_C = 10$ mA	H	
151-0301-01	151-0301-00	1. $I_{cbo} = 10$ nA Max, $V_{CB} = 50$ V 2. $I_{cev} = 50$ nA Max, $V_{CE} = 30$ V, $V_x = .5$ V 3. $I_{bev} = 50$ nA Max, $V_{BE} = 30$ V, $V_x = .5$ V 4. $BV_{ceo} = 60$ V Min, $I_{CE} = 10$ mA, Max DLV = 100 V 5. $BV_{cbo} = 60$ V Min, $I_{CB} = 10$ µA, Max DLV = 100 V 6. $h_{FE} = 74.9$ Min, $V_{CE} = 10$ V, $I_C = 100$ µA 7. $h_{FE} = 100$ Min, $V_{CE} = 10$ V, $I_C = 1000$ µA 8. $h_{FE} = 100$ Min, $V_{CE} = 10$ V, $I_C = 10$ mA 9. $h_{FE} = 100$ Min, $V_{CE} = 10$ V, $I_C = 150$ mA 10. $h_{FE} = 300$ Max, $V_{CE} = 10$ V, $I_C = 150$ mA 11. $h_{FE} = 50$ Min, $V_{CE} = 10$ V, $I_C = 500$ mA 12. $V_{CE} = .4$ V Max, $I_C = 150$ mA, $I_B = 15$ mA 13. $V_{CE} = 1.6$ V Max, $I_C = 500$ mA, $I_B = 50$ mA 14. $V_{BE} = 1.3$ V Max, $I_C = 150$ mA, $I_N = 15$ mA 15. $V_{BE} = 2.6$ V Max, $I_C = 500$ mA, $I_B = 50$ mA	G-	
151-0302-01	151-0302-00	1. $I_{ces} = 50$ nA Max, $V_{CE} = 70$ V 2. $I_{cbo} = 10$ nA Max, $V_{CB} = 60$ V 3. $I_{cev} = 10$ nA Max, $V_{CE} = 60$ V, $V_x = 3$ V 4. $I_{ebo} = 10$ nA Max, $V_{EB} = 3$ V 5. $BV_{cbo} = 75$ V Min, $I_{CB} = 10$ µA, Max DLV = 115 V 6. $BV_{ceo} = 40$ V Min, $I_{CE} = 10$ mA, Max DLV = 80 V 7. $BV_{ebo} = 6$ V Min, $I_{EB} = 10$ µA, Max DLV = 16 V 8. $h_{FE} = 35$ Min, $V_{CE} = 10$ V, $I_C = 100$ µA 9. $h_{FE} = 50$ Min, $V_{CE} = 10$ V, $I_C = 1$ mA 10. $h_{FE} = 75$ Min, $V_{CE} = 10$ V, $I_C = 10$ mA 11. $h_{FE} = 100$ Min, $V_{CE} = 10$ V, $I_C = 150$ mA 12. $h_{FE} = 300$ Max, $V_{CE} = 10$ V, $I_C = 150$ mA 13. $h_{FE} = 40$ Min, $V_{CE} = 10$ V, $I_C = 500$ mA 14. $h_{FE} = 50$ Min, $V_{CE} = 1$ V, $I_C = 150$ mA 15. $I + h_{FE} = 35$ Min, $V_{CB} = 10$ V, $I_E = 10$ mA 16. $V_{CE} = .3$ V Max, $I_C = 150$ mA, $I_B = 15$ mA 17. $V_{CE} = 1$ V Max, $I_C = 500$ mA, $I_B = 50$ mA 18. $V_{BE} = .6$ V Min, $I_C = 150$ mA, $I_B = 15$ mA 19. $V_{BE} = 1.2$ V Max, $I_C = 150$ mA, $I_B = 15$ mA 20. $V_{BE} = 2$ V Max, $I_C = 500$ mA, $I_B = 50$ mA	G	5A

COST CODE

(CC COLUMN)

CODE	A	B	C	D	E	F	G	H	I	J	K	L	M	N	O
≈ VALUE with +	.75¢	2¢	3.75¢	6¢	10¢	18¢	35¢	60¢	$1	$2	$3.75	$6	$10	$18	$35+
≈ VALUE no suffix	.5¢	1.5¢	3¢	5¢	8¢	15¢	25¢	50¢	75¢	$1.50	$3	$5	$8	$15	$25
≈ VALUE with -	.2¢	1.25¢	2.5¢	4.25¢	7¢	13¢	22¢	40¢	65¢	$1.25	$2.50	$4.25	$7	$13	$22

NOTE: Costs may vary from order to order due to order quantities, vendor, etc.

†† CATALOG RELIABILITY CODES

USAGE/YR	CODE
≥10	1
≥100	2
≥1 000	3
≥10 000	4
≥100 000	5
≥1 000 000	6
≥10 000 000	7

FAILURE FREQ	CODE		%/YR (median)
1/100 000	A	=	.001
1/50 000	B	=	.002
1/20 000	C	=	.005
1/10 000	D	=	.01
1/5 000	E	=	.02
1/2 000	F	=	.05
1/1 000	G	=	.1
1/500	H	=	.2
1/200	I	=	.5
1/100	J	=	1.0+

For further explanation of this code, see page 9-27.

SELECTED TRANSISTORS (CONT)

AVOID USING SELECTED COMPONENTS IF POSSIBLE IN NEW DESIGN, SEE PAGE 9-33 (THESE ARE NOT STOCKED IN ENG STOCK)

FINISHED PART NUMBER	RAW STOCK	CHARACTERISTICS	CC	†† RC
151-0333-01	151-0333-00	1. Burn-in for 72 hours 2. C_{ob} = ≤ 1.7 pF, V_{CB} = 10 V 3. BV_{ceo} = ≥ 15 V ≤ 25 V, I_{CE} = 3 mA 4. BV_{ebo} = ≥ 3 V ≤ 23 V, I_{EB} = 10 μA 5. I_{cbo} = ≤ 10 nA, V_{CB} = 15 V 6. I_{ces} = ≤ 10 nA, V_{CE} = 25 V 7. h_{FE} = ≥ 100, V_{CE} = 1 V, I_C = 3 mA 8. V_{CE} = ≤ .4 V, I_C = 10 mA, I_B = 1000 μA 9. V_{BE} = ≤ 1 V, I_C = 10 mA, I_B = 1000 μA 10. BV_{cbo} = ≥ 30 V, I_{CB} = 1000 mA	G	
151-0342-01	151-0342-00	1. Burn-in for 72 hours 2. C_{ob} = ≤ 6 pF, V_{CB} = 5 V 3. C_{IB} = ≤ 16 pF, V_{EB} = .5 V 4. BV_{ces} ≥ 60 V ≤ 70, I_{CE} = 10 μA 5. BV_{ceo} = ≥ 60 V ≤ 70V, I_{CE} = 5 mA 6. I_{cbo} = ≤ 10 nA, V_{CB} = 40 V 7. I_{ebo} = ≤ 20 nA, V_{EB} = 3 V 8. V_{CE} = ≤ .25 V, I_C = 10 mA, I_B = 500 μA 9. V_{BE} = ≤ .9 V, I_C = 10 mA, I_B = 500 μA 10. h_{FE} = ≥ 100, V_{CE} = 5 V, I_C = 10 mA 11. BV_{cbo} = ≥ 60 V ≤ 70 V, I_{CE} = 10 μA 12. BV_{ebo} = ≥ 5 V ≤ 15 V, I_{EB} = 10 μA 13. I ÷ h_{FE} I_B = ≤ 1000 nA, V_{CB} = 5 V, I_E = 100 μA 14. B_x = h_{FE} ≥ 100 A test #C, 14 ABS ratio const. = 100 μA 15. I + h_{FE} I_B = ≥ 333 nA, V_{CB} = 5 V, I_E = 100 μA 16. D_x = h_{FE} ≤ 303 A tests #C, 16 ABS ratio const = 100 μA 17. I + h_{FE} I_B = ≤ 10 μA, V_{CB} = 5 V, I_E = 1000 μA 18. D_x = h_{FE} ≥ 100 A test #C, 18 ABS ratio const = 1 mA	G	
151-0347-01	151-0347-00	1. I_{cbo} = 50 nA Max, V_{CB} = 120 V 2. I_{ces} = 50 nA Max, V_{CE} = 175 V 3. I_{ebo} = 50 nA Max, V_{EB} = 4 V 4. BV_{cbo} = 180 V Min, I_{CB} = 100 μA, Max DLV = 240 V 5. BV_{ceo} = 160 V Min, I_{CE} = 1 mA, Max DLV = 200 V 6. h_{FE} = 30 Min, V_{CE} = 5 V, I_C = 50 mA 7. h_{FE} = 80 Min, V_{CE} = 5 V, I_C = 1 mA 8. h_{FE} = 80 Min, V_{CE} = 5 V, I_C = 10 mA 9. h_{FE} = 250 Max, V_{CE} = 5 V, I_C = 10 mA	G-	5B

††FOR RELIABILITY CODES, SEE PAGE 8-9.

SELECTED TRANSISTORS (CONT)

AVOID USING SELECTED COMPONENTS IF POSSIBLE IN NEW DESIGN, SEE PAGE 9-33 (THESE ARE NOT STOCKED IN ENG STOCK)

8

FINISHED PART NUMBER	RAW STOCK	CHARACTERISTICS	CC	†† RC
151-0349-05	151-0349-00	1. Burn-in for 72 hours 2. BV_{ceo} = ≥ 60 V, ≤ 80 V, I_{CE} = 200 mA 3. BV_{cbo} = ≥ 75 V ≤ 95 V, I_{CB} = 100 μA 4. I_{cbo} = ≤ 100 μA, V_{CB} = 60 V 5. I_{ebo} = ≤ 10 μA, V_{CE} = 4 V 6. h_{FE} = ≥ 25, V_{CE} = 2 V, I_C = 3 A 7. h_{FE} = ≤ 100, V_{CE} = 2 V, I_C = 3 A 8. $V_{BE(ON)}$ ≤ 1.4, V_{CE} = 2 V, I_C = 3 A	I	4C
151-0350-01	151-0350-00	1. I_{cbo} = 50 nA Max, V_{CB} = 120 V 2. I_{ces} = 100 nA Max, V_{CE} = 120 V 3. I_{ebo} = 50 nA Max, V_{EB} = 3 V 4. BV_{cbo} = 160 V Min, I_{CB} = 100 μA, Max DLV = 200 V 5. BV_{ceo} = 150 V Min, I_{CE} = 1 mA, Max DLV = 1000 A 6. h_{FE} = 50 Min, V_{CE} = 5 V, I_C = 1 mA 7. h_{FE} = 60.1 Min, V_{CE} = 5 V, I_C = 10 mA 8. h_{FE} = 240 Max, V_{CE} = 5 V, I_C = 10 mA 9. h_{FE} = 50 Min, V_{CE} = 5 V, I_C = 50 mA	G-	4D
151-0358-02	151-0358-00	1. BV_{ceo} = 350 V Min, I_{CE} = 100 mA, Max DLV = 450 V 2. V_{CE} = 1 V Max, I_C = 500 mA, I_B = 50 mA 3. V_{BE} = 1.2 V Max, I_C = 500 mA, I_B = 50 mA 4. I_{ces} = 1000 μA Max, V_{CE} = 500 V 5. h_{FE} = 75 Min, V_{CE} = 10 V, I_C = 500 mA 6. h_{FE} = 175.1 Max, V_{CE} = 10 V, I_C = 500 mA 7. h_{FE} = 40 Min, V_{CE} = 10 V, I_C = 50 mA 8. I_{ebo} = 10 μA Max, V_{EB} = 5 V	I	
151-0362-01	151-0362-00	1. h_{FE} ≥ 15, V_{CE} = 2 V, I_C = 15 mA	K+	3H
151-0405-03	151-0405-00	1. BV_{ceo} ≥ 60 V, I_C = 50 mA 2. I_{cbo} ≤ 200 μA, V_{CB} = 60 V 3. I_{ceo} ≤ 500 μA, V_{CE} = 30 V 4. I_{ebo} ≥ 333 μA ≤ 100 μA, V_{EB} = 5 V 5. $V_{CE(sat)}$ ≤ 1.8 V, I_C = 1 A, I_B = 5 mA 6. $V_{BE(ON)}$ ≤ 2.5 V, I_C = 1.5 A, V_{CE} = 3 V 7. h_{FE} ≥ 1000, V_{CE} = 3 V, I_C = 1 A	H-	
151-0405-04	151-0405-00	1. Burn-in for 72 hours 2. 100% electrical (same as 151-0405-03)	H	4E

SELECTED TRANSISTORS (CONT)

AVOID USING SELECTED COMPONENTS IF POSSIBLE IN NEW DESIGN, SEE PAGE 9-33 (THESE ARE NOT STOCKED IN ENG STOCK)

FINISHED PART NUMBER	RAW STOCK	CHARACTERISTICS	CC	†† RC
151-0406-02	151-0406-00	1. Burn-in for 72 hours 2. BV_{ceo} = ≥ 150 V ≤ 170 V, I_{CE} = 1000 μA 3. BV_{cbo} = ≥ 150 V ≤ 170 V, I_{CB} = 100 μA 4. BV_{ebo} = ≥ 5 V ≤ 15 V, I_{EB} = 10 μA 5. I_{cbo} = ≤ 50 nA, V_{CB} = 120 V 6. I_{ceo} = ≤ 100 μA, V_{CE} = 120 V 7. I_{ebo} = ≤ 50 nA, V_{EB} = 3 V 8. V_{CE} = ≤ 2000 V, I_C = 10 mA, I_B = 1000 μA 9. V_{CE} = ≤ 2500 V, I_C = 50 mA, I_B = 5 mA 10. V_{BE} = ≤ 1V, I_C = 10 mA, I_B = 1000 μA 11. V_{BE} = ≤ 1 V, I_C = 50 mA, I_B = 5 mA 12. h_{FE} ≥ 45.1, V_{CE} = 5 V, I_C = 1000 μA 13. h_{FE} ≥ 50, V_{CE} = 5 V, I_C = 10 mA 14. h_{FE} ≤ 250, V_{CE} = 5 V, I_C = 10 mA 15. h_{FE} = 45.1, V_{CE} = 5 V, I_C = 50 mA	I	4D
151-0407-01	151-0407-00	1. I_{cbo} = 50 nA Max, V_{CB} = 120 V 2. I_{ceo} = 100 μA Max, V_{CE} = 120 V 3. I_{ebo} = 50 nA Max, V_{EB} = 3 V 4. BV_{ebo} = 6 V Min, I_{EB} = 10 μA, Max DLV = 46 V 5. BV_{cbo} = 150 V Min, I_{CB} = 100 μA, Max DLV = 450 V 6. BV_{ceo} = 150 V Min, I_{CE} = 1 mA, Max DLV = 450 V 7. h_{FE} = 45 Min, V_{CE} = 5 V, I_C = 1 mA 8. h_{FE} = 50 Min, V_{CE} = 5 V, I_C = 10 mA 9. h_{FE} = 250 Max, V_{CE} = 5 V, I_C = 10 mA 10. h_{FE} = 45 Min, V_{CE} = 5 V, I_C = 50 mA	H+	
151-0410-01	151-0410-00	1. I_{cer} = 100 nA Max, V_{CE} = 50 V, R_x = 10 k 2. I_{ebo} = 10 μA Max, V_{EB} = 5 V 3. BV_{cbo} = 60 V Min, I_{CB} = 10 μA, Max DLV = 180 V 4. BV_{ceo} = 60 V Min, I_{CE} = 1 mA, Max DLV = 180 V 5. h_{FE} = 250 Min, V_{CE} = 1 V, I_C = 6 mA 6. h_{FE} = 250 Min, V_{CE} = 1 V, I_C = .1 mA 7. h_{FE} = 300 Min, V_{CE} = 1 V, I_C = 2 mA	G	
151-0423-01	151-0358-00	1. I_{ceo} = 100 μA Max, V_{CE} = 300 V 2. I_{ces} = 100 μA Max, V_{CE} = 500 V 3. I_{ebo} = 100 μA Max, V_{EB} = 5 V 4. BV_{ceo} = 400 V Min, I_{CE} = 30 mA, Max DLV = 460 V 5. h_{FE} = 30 Min, V_{CE} = 10 V, I_C = 20 mA 6. h_{FE} = 30 Min, V_{CE} = 5 V, I_C = 100 mA 7. h_{FE} = 30 Min, V_{CE} = 10 V, I_C = .3 A 8. h_{FE} = 150 Max, V_{CE} = 10 V, I_C = .3 A 9. h_{FE} = 7. Min, V_{CE} = 10 V, I_C = 1 A 10. V_{CE} = 1 V Max, I_C = .5 A, I_B = .1 A 11. $V_{BE(ON)}$ = 1.5 V Max, V_{CE} = 10 V, I_C = 1 A	I-	3G

SELECTED TRANSISTORS (CONT)

AVOID USING SELECTED COMPONENTS IF POSSIBLE IN NEW DESIGN, SEE PAGE 9-33 (THESE ARE NOT STOCKED IN ENG STOCK)

8

FINISHED PART NUMBER	RAW STOCK	CHARACTERISTICS	CC	†† RC
151-0424-03	151-0424-00	1. I_{ces} = 400 nA Max, V_{CE} = 20 V 2. I_{cbo} = 400 nA Max, V_{CB} = 20 V 3. I_{ebo} = 1 µA Max, V_{EB} = 4.5 V 4. BV_{cbo} = 40 V Min, I_{CB} = 10 µA, Max DLV - 120 V 5. V_{CE} = .2000 V Max, I_C = 10 mA, I_B = 1 mA 6. V_{BE} = .7 V Min, I_C = 10 mA, I_B = 1 mA 7. V_{BE} = .85 V Max, I_C = 10 mA, I_B = 1 mA 8. h_{FE} = 30 Min, V_{CE} = .4 V, I_C = 30 mA 9. h_{FE} = 40 Min, V_{CE} = .35 V, I_C = 10 mA 10. h_{FE} = 120 Max, V_{CE} = .35 V, I_C = 10 mA	G	
151-0427-01	151-0427-00	1. Preconditioning 48 hours @ + 15 V 2. $h_{FE} \geq 70$, V_{CE} = 1 V, I_C = 8 mA 3. $BV_{cbo} \geq 30$ V, I_C = 100 µA 4. $BV_{ebo} \geq 2$ V, I_E = 10 µA 5. $I_{cbo} \leq 50$ nA, V_{CB} = 15 V 6. $V_{CE(sat)} \leq .2$ V, I_C = 10 mA, I_B = 1 mA 7. $V_{BE(sat)} \leq .9$ V, I_C = 10 mA, I_B = 1 mA 8. $V_{CEO(sus)} \geq 12$ V, I_C = 3 mA	G	
151-0434-01	151-0434-00	1. Preconditioning 48 hours @ + 15 V 2. $h_{FE} \geq 25$, V_{CE} = 1 V, I_C = 1 mA 3. $I_{cbo} \leq 100$ nA, V_{CB} = 10 V 4. $I_{ceo} \leq 3$ µA, V_{CE} = 10 V 5. $I_{ebo} \leq 500$ nA, V_{EB} = 2 V 6. $h_{FE} \geq 30$, V_{CE} = 1 V, I_C = 10 mA 7. $V(BR)_{ebo} \geq 4$ V, I_C = 10 µA 8. $h_{FE} \leq 150$, V_{CE} = 1 V, I_C = 10 mA 9. $h_{FE} \geq 20$, V_{CE} = 2 V, I_C = 30 mA 10. $V_{CE(sat)} \leq .15$ V, I_C = 1 mA, I_B = 1 mA 11. $V(BR)_{ceo} \geq 12$ V, I_C = 10 mA 12. $V_{CE(sat)} \leq .35$ V, I_C = 10 mA, I_B = 1 mA	I	
151-0441-03	151-0441-00	1. $BV_{ceo} \geq 18$ V ≤ 38 V, I_{CE} = 3 mA 2. $BV_{cbo} \geq 30$ V ≤ 50 V, I_{CB} = 100 µA 3. $BV_{ebo} \geq 4$ V ≤ 14 V, I_{EB} = 100 µA 4. I_{cbo} = $\leq$ 10 nA, V_{CE} = 10 V 5. $h_{FE} \geq 40$, V_{CE} = 2 V, I_C = 2 mA 6. $h_{FE} \geq 40$, V_{CE} = 2 V, I_C = 20 mA 7. V_{CE} = $\leq$ .2 V, I_C = 10 mA, I_B = 1000 µA 8. V_{BE} = $\leq$ 1.2 V, I_C = 10 mA, I_B = 1000 µA	H	

†† FOR RELIABILITY CODES, SEE PAGE 8-14.

SELECTED TRANSISTORS (CONT)

AVOID USING SELECTED COMPONENTS IF POSSIBLE IN NEW DESIGN, SEE PAGE 9-33 (THESE ARE NOT STOCKED IN ENG STOCK)

FINISHED PART NUMBER	RAW STOCK	CHARACTERISTICS	CC	†† RC
151-0443-02	151-0443-00	1. I_{ebo} = 100 nA Max, V_{EB} = 3 V 2. I_{cbo} = 250 nA Max, V_{CB} = 200 V 3. BV_{ebo} = 5 V Min, I_{EB} = 10 μA, Max DLV = 10 μA 4. BV_{cbo} = 300 V Min, I_{CB} = 100 μA, Max DLV = 500 V 5. h_{FE} = 25 Min, V_{CE} = 10 V, I_C = 1 mA 6. h_{FE} = 40 Min, V_{CE} = 10 V, I_C = 10 mA 7. V_{CE} = .8 V Max, I_C = 20 mA, I_B = 2 mA 8. V_{BE} = .9 V Max, I_C = 20 mA, I_B = 2 mA 9. h_{FE} = 25 Min, V_{CE} = 10 V, I_C = 30 mA 10. I_{ces} = 250 nA Max, V_{CE} = 280 V 11. BV_{ceo} = 300 V Min, I_{CE} = 1 mA, Max DLV = 400 V	H-	3E
151-0444-01	151-0444-00	1. Preconditioning 48 hours @ + 250 V 2. BV_{ceo} ≥ 350 V @ I_C = 1 mA (pulsed) 3. h_{FE} ≥ 25, V_{CE} = 10 V, I_C = 1 mA 4. I_{cbo} ≤ .1 μA, V_{CB} = 250 V 5. $V(BR)_{cbo}$ ≥ 350 V, I_C = 100 μA 6. $V(BR)_{ebo}$ ≥ 6 V, I_B = 100 μA 7. I_{ebo} ≤ .1 μA, V_{BE} = .6 V 8. $V_{CE(sat)}$ ≤ .5 V, I_C = 20 mA, I_B = 2 mA 9. $V_{BE(sat)}$ ≤ .9 V, I_C = 20 mA, I_B = 2 mA 10. h_{FE} ≥ 40, V_{CE} = 10 V, I_C = 10 mA 11. h_{FE} ≥ 40, V_{CE} = 10 V, I_C = 30 mA	G	
151-0444-03	151-0444-00	1. Preconditioning 48 hours @ + 250 V 2. I_{cbo} ≤ .1 μA, V_{CB} = 250 V 3. I_{ebo} ≤ .1 μA, V_B = 6 V 4. $V(BR)_{cbo}$ ≥ 350 V, I_C = 100 μA 5. $V(BR)_{ebo}$ ≥ 6 V, I_B = 100 μA 6. h_{FE} ≥ 25, V_{CE} = 10 V, I_C = 1 mA 7. h_{FE} ≥ 40, V_{CE} = 10 V, I_C = 10 mA 8. $V_{CE(sat)}$ ≤ .5 V, I_C = 20 mA, I_B = 2 mA 9. $V_{BE(sat)}$ ≤ .9 V, I_C = 20 mA, I_B = 2 mA 10. h_{FE} ≥ 40, V_{CE} = 10 V, I_C = 30 mA 11. I_{ces} ≤ 100 nA, V_{CB} = 325 V 12. BV_{ceo} ≥ 350 V, I_C = 1 mA (pulsed)	G+	

COST CODE

(CC COLUMN)

CODE	A	B	C	D	E	F	G	H	I	J	K	L	M	N	O
≈ VALUE with +	.75¢	2¢	3.75¢	6¢	10¢	18¢	35¢	60¢	$1	$2	$3.75	$6	$10	$18	$35+
≈ VALUE no suffix	.5¢	1.5¢	3¢	5¢	8¢	15¢	25¢	50¢	75¢	$1.50	$3	$5	$8	$15	$25
≈ VALUE with -	.2¢	1.25¢	2.5¢	4.25¢	7¢	13¢	22¢	40¢	65¢	$1.25	$2.50	$4.25	$7	$13	$22

NOTE: Costs may vary from order to order due to order quantities, vendor, etc.

†† CATALOG RELIABILITY CODES

USAGE/YR	CODE
≥ 10	1
≥ 100	2
≥ 1 000	3
≥ 10 000	4
≥ 100 000	5
≥ 1 000 000	6
≥ 10 000 000	7

FAILURE FREQ	CODE		%/YR (median)
1/100 000	A	=	.001
1/50 000	B	=	.002
1/20 000	C	=	.005
1/10 000	D	=	.01
1/5 000	E	=	.02
1/2 000	F	=	.05
1/1 000	G	=	.1
1/500	H	=	.2
1/200	I	=	.5
1/100	J	=	1.0+

For further explanation of this code, see page 9-27.

SELECTED TRANSISTORS (CONT)

AVOID USING SELECTED COMPONENTS IF POSSIBLE IN NEW DESIGN, SEE PAGE 9-33 (THESE ARE NOT STOCKED IN ENG STOCK)

8

FINISHED PART NUMBER	RAW STOCK	CHARACTERISTICS	CC	†† RC
151-0450-01	151-0450-00	1. Burn-in for 72 hours 2. BV_{cbo} = ≥ 35 V ≤ 45 V, I_{CB} = 100 μA 3. BV_{ceo} = ≥ 35 V ≤ 45V, I_{CE} = 3 mA 4. BV_{ebo} ≥ 3.5 V ≤13.5 V, I_{EB} = 100 μA 5. I_{cbo} = ≤ 100 nA, V_{CB} = 10 V 6. V_{BE} = ≤ 1.2 V, I_C = 100 mA, I_B = 10 mA 7. V_{CE} = ≤ .4 V, I_C = 100 mA, I_B = 10 mA 8. $V_{BE(ON)}$ ≤ 1.8 V, V_{CE} = 2 V, I_C = 10 mA 9. h_{FE} = ≥ 30, V_{CE} = 5 V, I_C = 25 mA 10. h_{FE} ≥ 30, V_{CE} = 5 V, I_C = 150 mA	J+	4E
151-0451-01	151-0451-00	1. Burn-in for 72 hours 2. BV_{cbo} = ≥ 55 V ≤ 75 V, I_{CB} = 100 μA 3. BV_{cer} = ≥ 55 V ≤ 65 V, I_{CE} = 100 μA, R_x = .1 k 4. BV_{cer} = ≥ 25 V ≤ 65 V, I_{CE} = 5 mA, R_x = 10 k 5. BV_{ebo} = ≥ 4 V ≤ 14 V, I_{EB} = 100 μA 6. I_{cer} ≤ 100 μA, V_{CE} = 55 V, R_x = .1 k 7. I_{cbo} = ≤ 100 nA, V_{CB} = 10 V 8. I_{ebo} = ≤ 100 μA, V_{EB} = 3.5 V 9. h_{FE} = ≥ 30, V_{CE} = 5 V, I_C = 25 mA 10. h_{FE} = ≥ 30, V_{CE} = 5 V, I_C = 150 mA 11. V_{CE} = ≤ .3 V, I_C = 100 mA, I_B = 10 mA 12. V_{BE} = ≤ 1.2 V, I_C = 100 mA, I_B = 10 mA	I+	
151-0461-01	151-0461-00	1. BV_{cbo} = ≥ 30 V ≤ 50 V, I_{CB} = 100 μA 2. BV_{ceo} = ≥ 14 V ≤ 34 V, I_{CE} = 3 mA 3. BV_{ebo} = ≥ 4 V ≤ 14 V, I_{EB} = 100 μA 4. I_{cbo} = ≤ 10 nA, V_{CB} = 10 V 5. h_{FE} = ≥ 80, V_{CE} = 2 V, I_C = 2 mA 6. h_{FE} = ≥ 80, V_{CE} = 2 V, I_C = 20 mA 7. h_{FE} = ≥ 100 V_{CE} = 5 V, I_C = 10 mA 8. V_{CE} = ≤ .3 V, I_C = 10 mA, I_B = 1000 μA 9. V_{BE} = ≤ 1.2 V, I_C = 10 mA, I_B = 1000 μA	K+	
151-0475-01	151-0475-00	1. I_{cbo} = ≤ 50 μA, V_{CB} = 5V 2. h_{FE} = ≥ 25, V_{CE} = 5V, I_C = 30 mA	J+	

SELECTED TRANSISTORS (CONT)

AVOID USING SELECTED COMPONENTS IF POSSIBLE IN NEW DESIGN, SEE PAGE 9-33 (THESE ARE NOT STOCKED IN ENG STOCK)

FINISHED PART NUMBER	RAW STOCK	CHARACTERISTICS	CC	†† RC
151-0477-01	151-0477-00	1. Burn-in for 72 hours 2. BV_{ceo} = ≥ 60 V ≤ 70 V, I_{CE} = 30 mA 3. I_{ceo} = ≤ 1000 μA, V_{CE} = 30 V 4. I_{ces} = ≤ 700 μA, V_{CE} = 60 V 5. I_{ebo} = ≤ 1000 μA, V_{EB} = 5 V 6. h_{FE} ≥ 25, V_{CE} = 4 V, I_C = 1500 mA 7. h_{FE} ≥ 10, V_{CE} = 4 V, I_C = 15 A 8. h_{FE} ≤ 50, V_{CE} = 4 V, I_C = 15 A 9. $V_{BE(ON)}$ ≤ 2 V, V_{CE} = 4 V, I_C = 15 A 10. V_{CE} ≤ 1.8 V, I_C = 15 A, I_B = 1500 mA	J+	
151-0478-01	151-0478-00	1. Preconditioning 48 hour @ + 50 V 2. h_{FE} ≥ 10, V_{CE} = 4 V, I_C = 3 A (pulsed) 3. V_{BE} ≥ 1.8 V @ V_{CE} - 4 V, I_C = 3 A (pulsed) 4. $V_{CE(sat)}$ ≤ 1.2 V @ I_C - 3 A, I_B = 375 mA (pulsed) 5. $_{FE}$ ≥ 25, V_{CE} = 4 V, I_C = 1 A 6. $_{eo}$ ≤ .3 mA, V_{CE} = 30 V 7. I_{ebo} ≤ 1 mA, B_{VE} = 5 V 8. VB_{ceo} ≥ 60 V, I_C = 30 mA 9. I_{ces} ≤ .2 mA, V_{CE} = 60 V	H-	3I
151-0497-01	151-0497-00	1. Preconditioning 48 hours @ + 250 V ± 50 V 2. $V(BR)_{ceo}$ ≥ 250 V @ I_C = 30 mA (pulsed) 3. h_{FE} ≥ 10, V_{CE} = 10 V, I_C = 1 A 4. $V_{CE(sat)}$ ≤ 1 V, I_C = 1 A, I_B = 200 mA 5. h_{FE} ≥ 30, V_{CE} = 10 V, I_C = 300 mA 6. h_{FE} ≤ 150, V_{CE} = 10 V, I_C = 300 mA 7. I_{ceo} ≤ 1 mA, V_{CE} = 150 V 8. I_{ces} ≤ 1 mA, V_{CE} = 350 V 9. I_{ebo} ≤ 1 mA, V_{EB} = 5 V 10. h_{FE} ≥ 30, V_{CE} = 10 V, I_C = 300 mA	H	3G
151-0508-01	151-0508-00	1. I_{cbo} ≤ 10 nA, V_{CB} = 40 V 2. I_{ebs} ≤ 100 nA, V_{EB} = 40 V 3. V_{CE} ≤ 1.5 V, I_C = 50 mA	H-	4E
151-0612-01	151-0612-00	1. Burn-in for 72 hours 2. BV_{cbo} = ≥ 300 V ≤ 320 V, I_{CB} = 100 μA 3. BV_{ceo} = ≥ 300 V ≤ 320 V, I_{CE} = 1000 μA 4. BV_{ebo} = ≥ 5 V ≤ 15 V, I_{EB} = 100 μA 5. I_{cbo} = ≤ 200 nA, V_{CB} = 200 V 6. I_{ebo} = ≤ 100 nA, V_{EB} = 3 V 7. $V_{BE(ON)}$ ≤ .85 V, V_{CE} = 10 V, I_C = 30 mA 8. V_{CE} = ≤ .75 V, I_C = 30 mA, I_B = 3 mA 9. h_{FE} ≥ 25, V_{CE} = 10 V, I_C = 1000 μA 10. h_{FE} ≥ 40, V_{CE} = 10 V, I_C = 30 mA 11. h_{FE} ≤ 180.2, V_{CE} = 10 V, I_C = 30 mA	H+	

8

SELECTED TRANSISTORS (CONT)

AVOID USING SELECTED COMPONENTS IF POSSIBLE IN NEW DESIGN, SEE PAGE 9-33 (THESE ARE NOT STOCKED IN ENG STOCK)

8

FINISHED PART NUMBER	RAW STOCK	CHARACTERISTICS	CC	†† RC
151-0615-01	151-0615-00	1. Burn-in for 72 hours 2. BV_{ceo} = ≥ 300 V ≤ 340 V, I_{CE} = 1000 μA 3. BV_{cbo} = ≥ 300 V ≤ 340 V, I_{CB} = 100 μA 4. BV_{ebo} = ≥ 6 V ≤ 26 V, I_{EB} = 100 μA 5. I_{cbo} = ≤ 200 nA, V_{CB} = 200 V 6. I_{ebo} = ≤ 100 nA, V_{EB} = 5 V 7. h_{FE} ≥ 25, V_{CE} = 10 V, I_C = 1000 μA 8. h_{FE} ≥ 40, V_{CE} = 10 V, I_C = 30 mA 9. h_{FE} ≤ 180.2, V_{CE} = 10 V, I_C = 30 mA 10. V_{CE} = ≤ .6 V, I_C = 30 mA, I_B = 3 mA 11. $V_{BE(ON)}$ ≤ .85 V, V_{CE} = 10 V, I_C = 30 mA	H	
151-0621-01	151-0621-00	1. Preconditioning breakdown test 2. $V(BR)_{cbo}$ ≥ 60 V, I_C = 100 μA 3. $V_{ceo(sus)}$ ≥ 45 V, I_C = 100 mA 4. I_{ebo} ≤ 100 μA, V_{EB} = 5 V 5. h_{FE} ≥ 40, V_{CE} = 1 V, I_C = 4 A 6. h_{FE} ≥ 60, V_{CE} = 1 V, I_C = 2 A	I+	2H
151-0625-01	151-0625-00	1. Burn-in for 72 hours 2. h_{FE} = ≥ 60, V_{CE} = 1 V, I_C = 2 A 3. h_{FE} = ≥ 40, V_{CE} = 1 V, I_C = 4 A 4. BV_{ceo} ≥ 80 V ≤ 100 V, I_{CE} = 100 mA 5. V_{CE} = ≤ 1 V, I_C = 8 A, I_B = 400 mA 6. $V_{BE(ON)}$ ≥ .54 V, V_{CE} = 2 V, I_C = 10 mA 7. $V_{BE(ON)}$ ≤ .64 V, V_{CE} = 2 V, I_C = 10 mA 8. I_{cbo} = ≤ 10 μA, V_{CB} = 1 V 9. I_{ebo} = ≤ 100 μA, V_{EB} = 5 V 10. V_{BE} = ≤ 1.5 V, I_C = 8 A, I_B = 800 mA	I+	
151-0634-01	151-0634-00	1. h_{FE} ≥ 8 ≤ 40, V_{CE} = 2 V, I_C = 500 mA 2. h_{FE} ≥ 5 ≤ 25, V_{CE} = 2 V, I_C = 1000 mA 3. I_{ebo} ≤ 1000 μA, V_{EB} = 9 V 4. V_{CE} ≤ .5 V, I_C = 500 mA, I_B = 100 mA 5. V_{CE} ≤ 1 V, I_C = 1000 mA, I_B = 250 mA 6. V_{CE} ≤ 3 V, I_C = 1500 mA, I_B = 500 mA 7. V_{CE} ≤ 1 V, I_C = 500 mA, I_B = 100 mA 8. V_{BE} ≤ 1.2 V, I_C = 1000 mA, I_B = 250 mA	I	

COST CODE

(CC COLUMN)

CODE	A	B	C	D	E	F	G	H	I	J	K	L	M	N	O
℞ VALUE with +	.75¢	2¢	3.75¢	6¢	10¢	18¢	35¢	60¢	$1	$2	$3.75	$6	$10	$18	$35+
℞ VALUE no suffix	.5¢	1.5¢	3¢	5¢	8¢	15¢	25¢	50¢	75¢	$1.50	$3	$5	$8	$15	$25
℞ VALUE with -	.2¢	1.25¢	2.5¢	4.25¢	7¢	13¢	22¢	40¢	65¢	$1.25	$2.50	$4.25	$7	$13	$22

NOTE: Costs may vary from order to order due to order quantities, vendor, etc.

†† RELIABILITY CODES

USAGE/YR	CODE
≥10	1
≥100	2
≥1 000	3
≥10 000	4
≥100 000	5
≥1 000 000	6
≥10 000 000	7

FAILURE FREQ	CODE		%/YR (median)
1/100 000	A	=	.001
1/50 000	B	=	.002
1/20 000	C	=	.005
1/10 000	D	=	.01
1/5 000	E	=	.02
1/2 000	F	=	.05
1/1 000	G	=	.1
1/500	H	=	.2
1/200	I	=	.5
1/100	J	=	1.0+

For further explanation of this code, see page 9-27.

SELECTED TRANSISTORS (CONT)

AVOID USING SELECTED COMPONENTS IF POSSIBLE IN NEW DESIGN, SEE PAGE 9-33 (THESE ARE NOT STOCKED IN ENG STOCK)

FINISHED PART NUMBER	RAW STOCK	CHARACTERISTICS	CC	†† RC
151-0693-01	151-0693-00	1. Burn-in for 72 hours 2. BV_{ceo} = ≥ 350 V ≤ 390 V, I_{CE} = 1000 μA 3. BV_{cbo} = ≥ 350 V ≤ 390 V, I_{CB} = 100 μA 4. BV_{ebo} = ≥ 6 V ≤ 16 V, I_{EB} = 100 μA 5. I_{cbo} = ≤ 200 nA, V_{CB} = 250 V 6. I_{ebo} = ≤ 100 nA, V_{EB} = 5 V 7. h_{FE} ≥ 25, V_{CE} = 10 V, I_C = 1000 μA 8. h_{FE} ≥ 40, V_{CE} = 10 V, I_C = 30 mA 9. h_{FE} ≤ 180.2, V_{CE} = 10 V, I_C = 30 mA 10. V_{CE} = ≤ .6 V, I_C = 30 mA, I_B = 3 mA 11. V_{CE} ≤ 1.5 V, I_C = 50 mA, I_B = 5 mA 12. $V_{BE(ON)}$ ≤ .85 V, V_{CE} = 10 V, I_C = 30 mA	H+	3G
151-0694-01	151-0694-00	1. Burn-in for 72 hours 2. BV_{ceo} = ≥ 350 V ≤ 390 V, I_{CE} = 1000 μA 3. BV_{cbo} ≥ 350 V ≤ 390 V, I_{CE} = 100 μA 4. BV_{ebo} ≥ 5 V ≤ 15 V, I_{EB} = 100 μA 5. I_{cbo} = ≤ 200 nA, V_{CB} = 250 V 6. I_{ebo} ≤ 100 nA, V_{EB} = 4 V 7. $V_{BE(ON)}$ ≤ .85 V, V_{CE} = 10 V, I_C = 30 mA 8. V_{CE} = ≤ .75 V, I_C = 30 mA, I_B = 3 mA 9. V_{CE} = ≤ 1.8 V, I_C = 50 mA, I_B = 5 mA 10. h_{FE} ≥ 25, V_{CE} = 10 V, I_C = 1000 μA 11. h_{FE} ≥ 40, V_{CE} = 10 V, I_C = 30 mA 12. h_{FE} ≤ 180.2, V_{CE} = 10 V, I_C = 30 mA	I	3G
151-1032-02	151-1032-00	1. V_{out} ≤ ± 50 mV 2. I_G ≤ 100 pA, V_{DG} = 12 V	K	
151-1042-01	151-1042-00	1. I_{DSS} ≥ 10 mA ≤ 18 mA, V_{DS} = 15 V, V_{GS} = 0 (pulsed)	H-	3E
151-1090-03	151-1090-00	1. I_G ≤ 100 pA @ 9 V, V_{GS}= 0 2. V_{out} ≤ ± 50 mV 3. G_{fs} ≥ 6.5 μmho @ V_{DS} = 10 V, V_{GS} = 0 (pulsed)	K-	3J
153-0528-00	151-0103-00	1. $V_{CE(sat)}$ = 7.5V Max @ I_C = 90 mA, I_B = .9 mA	K-	
153-0530-00	151-0131-00	1. h_{FE} ≥ 80, I_C = 10 mA, V_{CE} = 1V	K-	

COST CODE

(CC COLUMN)

CODE	A	B	C	D	E	F	G	H	I	J	K	L	M	N	O
≈ VALUE with +	.75¢	2¢	3.75¢	6¢	10¢	18¢	35¢	60¢	$1	$2	$3.75	$6	$10	$18	$35+
≈ VALUE no suffix	.5¢	1.5¢	3¢	5¢	8¢	15¢	25¢	50¢	75¢	$1.50	$3	$5	$8	$15	$25
≈ VALUE with -	.2¢	1.25¢	2.5¢	4.25¢	7¢	13¢	22¢	40¢	65¢	$1.25	$2.50	$4.25	$7	$13	$22

NOTE: Costs may vary from order to order due to order quantities, vendor, etc.

†† RELIABILITY CODES

USAGE/YR	CODE
≥10	1
≥100	2
≥1 000	3
≥10 000	4
≥100 000	5
≥1 000 000	6
≥10 000 000	7

FAILURE FREQ	CODE	%/YR (median)
1/100 000	A	= .001
1/50 000	B	= .002
1/20 000	C	= .005
1/10 000	D	= .01
1/5 000	E	= .02
1/2 000	F	= .05
1/1 000	G	= .1
1/500	H	= .2
1/200	I	= .5
1/100	J	= 1.0+

For further explanation of this code, see page 9-27.

SELECTED TRANSISTORS (CONT)

AVOID USING SELECTED COMPONENTS IF POSSIBLE IN NEW DESIGN, SEE PAGE 9-33 (THESE ARE NOT STOCKED IN ENG STOCK)

FINISHED PART NUMBER	RAW STOCK	CHARACTERISTICS	CC	†† RC
153-0537-00	151-0142-00	1. $T_R \leq .9$ n Sec.	N+	
153-0539-00	151-0103-00	1. $h_{FE} \geq 150$ @ $V_{CE} = 1V$, $I_C = 5$ mA	K-	
153-0543-00	151-0108-01	1. $t_{rr} \leq 12$ n Sec.	L	
153-0545-00	151-0108-01	1. Avalanche voltage (BV_{ces}) $\geq 65V \leq 80V$	L	
153-0546-00	151-0230-00	1. $h_{FE} \geq 100$, $V_{CE} = 6V$, $I_C = 1$ mA 2. $I_{cer} \leq .1$ nA, $V_{CE} = 5V$, $R_{BE} = 3.6$ k	L-	
153-0555-00	151-0133-00	1. $BV_{ceo} \geq 70V$ @ $I_C = .1$ mA	L-	
153-0557-00	151-0190-00	1. $Z_c \geq 2.5$ MΩ	J	3H
153-0560-00	151-0131-00	Special avalanche selection 1. Pulse height 200 mV ± 20 % peak-to-peak 2. Pulse risetime, from 10% to 90%, ≤ 3 n Sec.	N-	
153-0563-00	151-1006-00	1. $BV_{GD} \geq 60V$ @ $I_C = 10$ μA	K	
153-0583-00	151-0225-00	1. $V_Z \geq 19V$ @ $I_{ZT} = 6.2$ mA 2. $V_Z \leq 21V$ @ $I_{ZT} = 6.2$ mA 3. $I_R \leq 5$ μA @ $V_R = 15.2V$	I	
153-0588-00	151-0225-00	1. $V_{BE} \geq .6V$ @ $I_E = 4$ μA	K+	
153-0593-00	151-0150-00	1. $I_{CBP} \leq 5$ nA @ $V_{CB} = 100V$	L	
153-0605-00	151-0367-00	1. $h_{FE} \geq 150$ @ $V_{CE} = 6V$, $I_C = 5$ mA	K-	
153-0614-00	151-0288-00	1. $h_{FE} \geq 36$ @ $V_{CE} = 2V$, $I_C = 180$ mA 2. $I_{cer} \leq 1$ μA @ $V_{CE} = 10V$, $R_{BE} = 56.2$ Ω 3. $I_{cer} \leq 10$ μA @ $V_{CE} = 34V$, $R_{BE} = 56.2$ Ω	N+	3H
153-0628-00	151-0464-00	1. $h_{FE} \geq$ @ $I_C = 100$ mA, $V_{CE} = 5V$	J+	
153-0630-00	151-0462-00	1. $h_{FE} \geq 60$ @ $I_C = 100$mA, $V_{CE} = 5V$	J+	
153-0642-00	151-0354-00	1. V_{BE} selected $\geq .67V \leq .7V$ @ $I_C = .65$ mA (BC Shorted)	L	
153-0646-00	151-0190-00	1. Selected for $BV_{ceo} \geq 55V$ @ $I_C = 1$ mA	J-	
153-0647-00	151-0188-00	1. Selected for $BV_{ceo} \geq 55V$ @ $I_C = 1$ mA	K+	
153-0652-00	151-0679-00	1. $BV_{ceo} \geq 400V$, $I_{CE} = 10$ mA 2. $I_{cev} \leq 1000$ μA, $V_{CE} = 400V$, $V_F = 1.5V$ 3. $I_{ebo} \leq 1000$ μA, $V_{EB} = 9V$ 4. $h_{FE} \geq 8 \leq 16$, $V_{CE} = 5V$, $I_C = 5A$ 5. $h_{FE} \geq 5.99 \leq 16$, $V_{CE} = 5V$, $I_C = 8A$ 6. $V_{CE} \leq 1V$, $I_C = 5A$, $I_B = 1000$ mA 7. $V_{CE} \leq 3V$, $I_C = 12A$, $I_B = 3A$ 8. $V_{BE} \leq 1.2V$, $I_C = 5A$, $I_B = 1000$ mA 9. $V_{BE} \leq 1.6V$, $I_C = 8A$, $I_B = 1600$ mA	K-	3J

MATCHED AND CHECKED TRANSISTORS

AVOID USING SELECTED COMPONENTS IF POSSIBLE IN NEW DESIGN, SEE PAGE 9-33 (THESE ARE NOT STOCKED IN ENG STOCK)

FINISHED PART NUMBER	RAW STOCK	CHARACTERISTICS	CC	†† RC
151-0198-03	(2) 151-0198-02	1. V_{BE} matched within 5 mV @ V_{CE} = 5V, I_C = 4 mA	L	2I
151-0221-07	(2) 151-0221-00	1. I_B within 10 μA of each other 2. h_{FE} of 50 to 100		
151-0368-01	151-0368-00	1. T_{off} ≥ 3 μS	J+	3I
151-0373-01	151-0373-00	1. h_{FE} ≥ 80 @ V_{CE} = 10V, I_C = 360 mA	I	
151-1042-02	(2) 151-1042-00	1. Preconditioning 48 hours @ + 24V 2. I_{DSS} ≥ 10 mA ≤ 18 mA @ V_{DS} = 15V, V_{GS} = 0 (pulsed) 3. I_{DSS_1} I_{DSS_2} ≤ .5 mA @ V_{DS} = 15V (pulsed)	J-	4H
153-0525-00	(2) 151-0120-00	1. Pair, h_{FE} ≥ 30 ≤ 157, I_C = 20 mA, V_{CE} = 5V	N+	
153-0526-00	(2) 151-0127-00	1. Pair, h_{FE} selection I_C - 50 mA, V_{CE} = 5V. Beta matched within ± 10% of each other.	K+	
153-0527-00	(2) 151-0108-01	1. Pair, h_{FE} paired @ V_{CE} = 5V, I_C = 15 mA. Beta matched within 20% of each other.	L-	
153-0534-00	151-0103-00	1. h_{FE} ≤ 200 % 1000, V_{CE} = 25V, I_C = 5 mA 2. Match for a capacitance with Δ reverse bias @ .033 pF	L+	
153-0535-00	151-0133-00	1. h_{FE} selection @ V_{CE} = 15V, I_C = 6 mA	M	
153-0536-00	(2) 151-0150-00	1. h_{FE} ≥ 80 ≤ 210, I_C = 10 mA, V_{CE} = 25V 2. C_{ob} matched within .5 pF @ 45V	M-	
153-0547-00	(2) 151-0198-01	1. Z_c (no breakdown) 2. Beta matched V_{CE} = 5V, I_C = 5 mA 3. V_{BE} matching within 2 mV, V_{CE} = 5V, I_C = 5 mA	L+	
153-0548-00	151-0124-00	1. Beta matched within 10% of each other, I_{CE} = 10 mA, V_{CE} = 20V 2. h_{rb} ≤ .018 2/10 kc (pulsed)	O	
153-0549-00	151-1005-00	1. I_{DSS} selection 2 to 3 mA @ V_{DX} = 15V	J+	3G
153-0552-01	151-0225-00 151-0417-00 200-0781-01	1. V_{BE} matching of NPN & PNP transistors to 60 mV ± 15 mV	J-	
153-0553-00	151-0142-00 151-0282-00 214-0818-01	1. V_{BE} matching of NPN & PNP transistors matched to V_{BE} difference of 12 mV to 25 mV 2. V_{CE} = 8V, I_C = 8 mA with NPN 12 mV to 25 mV greater than PNP	O+	
153-0556-01	151-0108-01	1. BV_{ces} avalanche ≥ 55V @ ≤ 1 mA, with leakage ≤ 1 μA	K+	3G
153-0558-00	(2) 151-0188-00	1. Matched for h_{FE} within 10% at V_{CE} = 5V, I_C = 1 mA	K	
153-0561-00	(2) 151-1022-00	1. V_{GS} ≥ 1V ≤ 3.5V matched within .5V @ V_{DG} = 20V, I_D = 2.6 mA	O-	
153-0565-00	(2) 151-0190-02	1. Z_C ≤ 2.5 MΩ 2. C_{ob} matched within .05 pF with V_{CB} = 10V	K+	3J

MATCHED AND CHECKED TRANSISTORS (CONT)

AVOID USING SELECTED COMPONENTS IF POSSIBLE IN NEW DESIGN, SEE PAGE 9-33 (THESE ARE NOT STOCKED IN ENG STOCK)

FINISHED PART NUMBER	RAW STOCK	CHARACTERISTICS	CC	†† RC
153-0566-00	(2) 151-0202-00	1. V_{BE} matched within 5 mV, V_{CE} = 4V, I_C = 6 mA	N-	3J
153-0569-00	(2) 151-0252-00	1. Pair matched for electrical output within 15%	L+	
153-0570-00	151-1005-00	1. V_{GS} = .08 V to -1.6 V @ I_D = 1 mA	J+	
153-0574-00	(2) 151-0103-00	1. $h_{oe} \leq$ 150 μmho @ I_C = 20 mA, V_{CE} = 20 mA, V_{CE} = 25V, $h_{oe} \leq$ 70 μmho @ I_C = 10 mA, V_{CE} = 25V 2. $h_{FE} \leq I_C$ = 10 mA, V_{CE} = 15V 3. C_{ob} matched within .02 pF of each other	L	3F
153-0575-00	(2) 151-0224-00	1. Pair, matched for $V_{CE(sat)}$ within 5 mV, @ I_C = 1 mA, I_B = .5 mA	L	3F
153-0576-00	(2) 151-0124-00	1. h_{FE} selection @ I_C = 10 mA, V_{CE} = 6V 2. C_{ob} matched within .03 pF @ 25V	M	3G
153-0577-00	(4) 151-0225-00	1. V_{BE} matched with 5 mV, V_{CE} = 5V, T_C = 5 mA	L+	
153-0584-00	151-0230-00	1. Pair of transistors matched within 5 mV @ V_{CE} = 1.5V, I_C = 5 mA	M-	
153-0586-00	(2) 151-0188-00	1. h_{FE} selection @ I_C = 8 mA, V_{CE} = 8V 2. V_{BE} selected within 5 mV (V_{CE} = 1V, I_C = 2 mA)	L-	
153-0587-00	(2) 151-0190-02	1. h_{FE} selection @ V_{CE} = 8V, I_C = 8 mA 2. Pair V_{BE} matched within 5 mV @ V_{CE} = 8V, I_C = 8 mA	L-	
153-0589-00	(2) 151-0330-00	1. h_{FE} selection @ V_{CE} = 5V, I_C = 10 mA 2. V_{BE} matched within 5 mV @ V_{CE} = 8V, I_C = 8 mA	O+	
153-0590-00	151-0212-00 151-0272-00 200-1153-00 200-1155-00 211-0062-00	1. V_{BE} sorting of 151-0272-00, I_C = 8 mA, V_{CE} = 5V 2. V_{BE} sorting of 151-0212-00, I_C = 8 mA, V_{CE} = 5V 3. Pair matched within 5 mV of each other	O+	
153-0591-00	(2) 151-0212-00	1. V_{BE} matched within 5 mV @ I_C = 8 mA, V_{CE} = 8V	O-	
153-0594-00	(2) 151-0206-00	1. Pair matched within 5 mV, V_{BE} @ V_{CE} = 5V, I_C = 5 mA	M+	
153-0595-00	(2) 151-0225-04	Sample of 10% of lot 1. I_B = 33 μA Min, 50 μA Max., I_C = 50 mA, V_{CE} = 6V 2. I_B difference ≤ 15 μA, set of four	M	
153-0596-00	(2) 151-0225-04	Sample of 10% of lot 1. I_B = 33 μA Min, 50 μA Max., I_C = 50 mA, V_{CE} = 6V 2. I_B difference ≤ 15 μA, pair	K	3G
153-0597-00	(2) 151-0221-07	1. H_{FE} of 50 to 100 and matched for I_B of 10μA	K	4C
153-0597-01	(2) 151-0221-00	1. $h_{FE} \geq$ 50, V_{CE} = 6V, I_C = 12 mA 2. V_{CE} matched within 5 mV, V_{CE} = 6V, I_C = 12 mA	K	3G
153-0602-00	(3) 151-0192-00	1. V_{BE} matching @ I_C = 2.5 mA, V_{CE} = 2V	L	
153-0603-01	(2) 151-0367-00 214-0973-00	1. $V_{BE_1} - V_{BE_2} \leq$ 5 mV, V_{CE} = 5V, I_C = 5 mA	L	

MATCHED AND CHECKED TRANSISTORS (CONT)

AVOID USING SELECTED COMPONENTS IF POSSIBLE IN NEW DESIGN, SEE PAGE 9-33 (THESE ARE NOT STOCKED IN ENG STOCK)

FINISHED PART NUMBER	RAW STOCK	CHARACTERISTICS	CC	†† RC
153-0606-00	Set of 4 (2) 151-0221-00 (2) 151-0271-00	1. Beta matching, V_{CE} = 6V, I_C = 15 mA	M+	
153-0607-00	151-1032-00	1. I_D selection 11.5 mA to 14.25 mA in a 20Ω totem pole circuit with V_{DG} = 9V	N+	
153-0609-00	(2) 151-0271-00	1. V_{BE} matched within 5 mV @ V_{CE} = 4V, I_C = 6 mA	M+	3I
153-0610-00	(2) 151-0221-00 214-0973-00	1. $h_{FE} \geq 80$, V_{CE} = 4V, I_C = 8 mA 2. $h_{FE} \leq 180$, V_{CE} = 4V, I_C = 8 mA 3. V_{BE} matched within 5 mV @ I_C = 10 mA, V_{CE} = 4V	K-	
153-0610-02	(2) 151-0221-06 with 214-0973-00	1. $h_{FE} \geq 70 \leq 100$, V_{CE} = 4V, I_C = 8 mA 2. V_{BE} matching within 5 mV @ V_{CE} = 4V, I_C = 8 mA	J+	
153-0610-03	(2) 151-0221-06 (1) 200-0945-00 (1) 200-0945-01	1. $h_{FE} \geq 70 \leq 100$ 2. V_{BE} matching within 5 mV	J-	
153-0611-00	(2) 151-0436-00	1. h_{FE} matching @ V_{CE} = 15V, I_C = 100 mA	M-	
153-0612-00	151-0192-00 151-0410-00 Set of 4 200-0945-03 200-0945-04 211-0001-00	1. V_{BE} matching within 5 mV @ V_{CE} = 5V, I_C = 1 mA 2. Verification check	L-	
153-0612-02	151-0188-00 151-0190-00 200-0715-00	1. h_{FE} range $\geq 100 \leq 400$ 2. V_{BE} matched within 5 mV @ V_{CE} = 5V, I_C = 5 mA	M+	
153-0613-00	(2) 151-0108-01	1. BV_{ces} avalanche $\geq$ 70V $\leq$ 90V @ 20 μA matched within 2V of each other	O+	
153-0618-00	151-1025-00	1. $I_{DSS} \geq 8$ mA $\leq$ 10 mA @ V_{DG} = 6V	J+	
153-0619-00	151-1078-00	1. $I_{DSS} \geq 12$ mA @ V_{DG} = 6V	J+	
153-0621-00	(2) 151-0484-00	1. Matching base current within 20 nA of each other, I_C = 100 μA, V_{CE} = 8V	K	3H
153-0623-00	(2) 151-0223-00 (1) 151-0271-00	1. Verify in special circuit to ± .7V	L+	2I
153-0624-00	(2) 151-0427-00 (1) 214-0973-00	1. Beta matched within 10% of each other 2. V_{BE} matched within 5 mV @ I_C = 8 mA, V_{CE} = 4V	K+	
153-0627-00	(2) 151-0462-00	1. $h_{FE} \geq 40$ @ I_C = 200 mA, V_{CE} = 5V matched within 10% of each other.	L-	3E
153-0629-00	(2) 151-0410-00	1. V_{BE} within 10 mV, V_{CB} = 5V, I_{BE} = 150 μA	J	
153-0631-00	151-0441-00	1. I_B matched within 10 μA @ V_{CE} = 3V, I_C = 5 mA	L	
153-0633-00	(2) 151-0282-00	1. $V(BR)_{ced} \geq$ 21V with a difference of $\leq$ 2V @ I_C = 1 mA and I_C = 10 mA	K+	
153-0649-00	151-0426-01	1. Storage time selection of 650 nS Max., matched within 100 nS of each other.	M-	2H

MATCHED AND CHECKED TRANSISTORS (CONT)

AVOID USING SELECTED COMPONENTS IF POSSIBLE IN NEW DESIGN, SEE PAGE 9-33 (THESE ARE NOT STOCKED IN ENG STOCK)

8

FINISHED PART NUMBER	RAW STOCK	CHARACTERISTICS	CC	†† RC
153-0650-00	(2) 151-0447-00	1. V_{BE} matched within 5 mV, V_{CE} = 2.5V, I_C = 30 mA	N	
153-0653-00	(4) 151-0271-00	1. $V_{BE} \leq$ 900 mV, matched within 5 mV, I_C = 15 mA, V_{CE} = 6V 2. $I_B \leq$ 400 µA, matched within 25 µA, V_{CE} = 6V, I_C = 15 mA	M+	3G
153-0654-00	(2) 151-0712-01	1. 10% sample to verify match of V_{BE} of 5 mV @ V_{CE} = 4V, I_C = 4 mA 2. Then paired	M+	
153-0655-00	(2) 151-0223-05 (1) 200-0945-00 (1) 200-0945-01	1. Matched for V_{BE} of 5 mV		

COST CODE

(CC COLUMN)

CODE	A	B	C	D	E	F	G	H	I	J	K	L	M	N	O
≈ VALUE with +	.75¢	2¢	3.75¢	6¢	10¢	18¢	35¢	60¢	$1	$2	$3.75	$6	$10	$18	$35+
≈ VALUE no suffix	.5¢	1.5¢	3¢	5¢	8¢	15¢	25¢	50¢	75¢	$1.50	$3	$5	$8	$15	$25
≈ VALUE with -	.2¢	1.25¢	2.5¢	4.25¢	7¢	13¢	22¢	40¢	65¢	$1.25	$2.50	$4.25	$7	$13	$22

NOTE: Costs may vary from order to order due to order quantities, vendor, etc.

†† CATALOG RELIABILITY CODES

USAGE/YR	CODE
≥10	1
≥100	2
≥1 000	3
≥10 000	4
≥100 000	5
≥1 000 000	6
≥10 000 000	7

FAILURE FREQ	CODE		%/YR (median)
1/100 000	A	=	.001
1/50 000	B	=	.002
1/20 000	C	=	.005
1/10 000	D	=	.01
1/5 000	E	=	.02
1/2 000	F	=	.05
1/1 000	G	=	.1
1/500	H	=	.2
1/200	I	=	.5
1/100	J	=	1.0+

For further explanation of this code, see page 9-27.

TRANSISTORS

9

SECTION 9

TABLE OF CONTENTS

PAGE(S)

CASE DRAWINGS ..... 9-2 THRU 9-8

CROSS REFERENCE INDEX ..... 9-9 THRU 9-25

TEK PART NUMBER TO VENDOR NUMBER ..... 9-9 THRU 9-18

JEDEC TO TEK PART NUMBER ..... 9-19 & 9-20

MFG. TO TEK PART NUMBER ..... 9-21 THRU 9-25

NOTES 9-26

RELIABILITY NOTES ..... 9-27 & 9-28

APPLICATION NOTES ..... 9-29 THRU 9-33

SAFE OPERATING AREA & SECOND BREAKDOWN ..... 9-29 & 9-30

TO-220 HANDLING PRECAUTIONS 9-31

STORAGE TIMES & SATURATION VOLTAGES 9-32

AVOID USING SELECTED PARTS 9-33

TO-220 MOUNTING SYSTEM FEATURES HIGH VOLTAGE WITHSTAND CAPABILITY 9-34

COST CODE

(CC COLUMN)

CODE	A	B	C	D	E	F	G	H	I	J	K	L	M	N	O
≈ VALUE with +	.75¢	2¢	3.75¢	6¢	10¢	18¢	35¢	60¢	$1	$2	$3.75	$6	$10	$18	$35+
≈ VALUE no suffix	.5¢	1.5¢	3¢	5¢	8¢	15¢	25¢	50¢	75¢	$1.50	$3	$5	$8	$15	$25
≈ VALUE with -	.2¢	1.25¢	2.5¢	4.25¢	7¢	13¢	22¢	40¢	65¢	$1.25	$2.50	$4.25	$7	$13	$22

NOTE: Costs may vary from order to order due to order quantities, vendor, etc.

CATALOG WRITER: NORMA PETERSON, EXT. 2577.

TRANSISTOR CASE DRAWINGS

9

TO-126

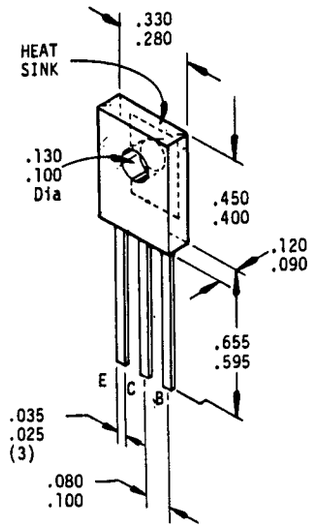

77-03

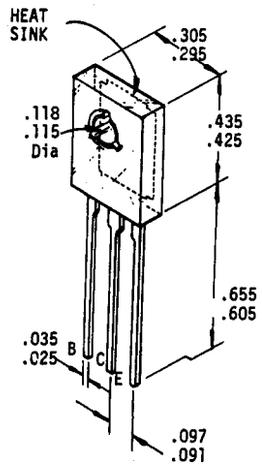

TO-127

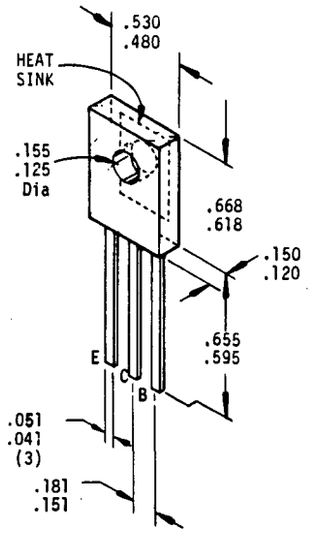

TO-202

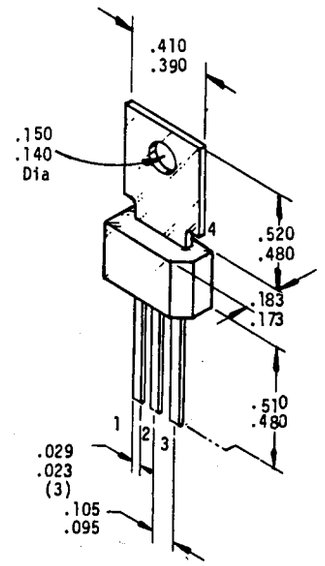

		LEADS			
		1	2	3	4
(A)	Power	E	B	C	
(B)	Power	B	C	E	
	SCR	C	A	G	A

SCR (Without Tab)

TO-220

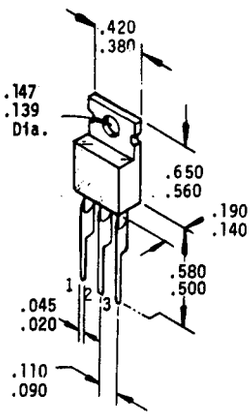

	LEADS		
	1	2	3
SCR	MT_1	MT_2	G
Power	B	C	E
FET	G	D	S

X-58

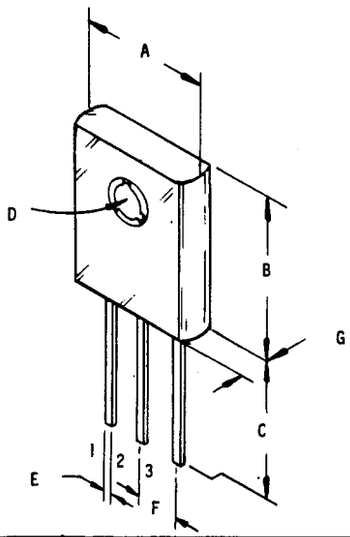

	A	B	C	D	E	F	G
X58	.270 .330	.390 .450	.595 .655	.115 .118	.020 .026	.090	.070 .130
X58a	.490 .520	.628 .658	.590 .650	.138 .148	.043 .049	.166 TYP	.120 .150

	LEADS		
	1	2	3
SCR	C	A	G
Power Xstr	E	C	B

X-81

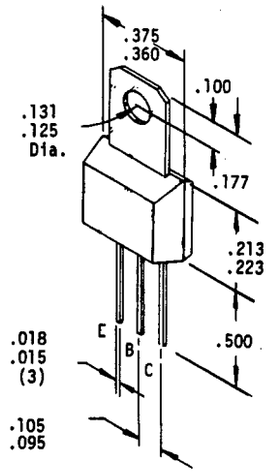

TO-218

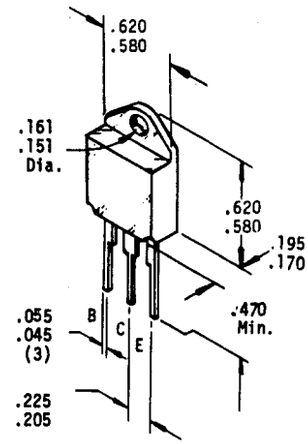

TRANSISTOR CASE DRAWINGS (CONT)

MD-34

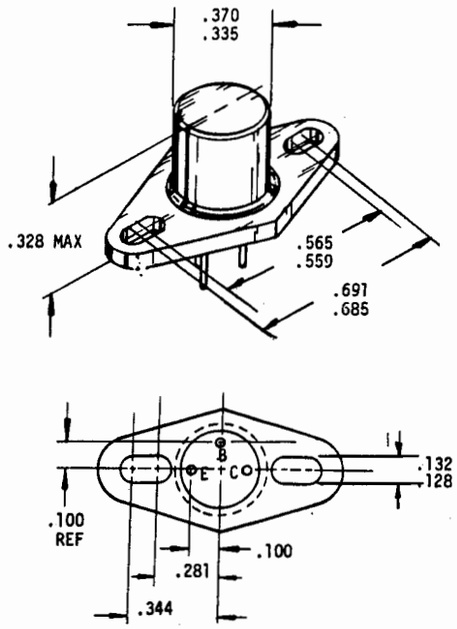

BOTTOM VIEW

TO-3

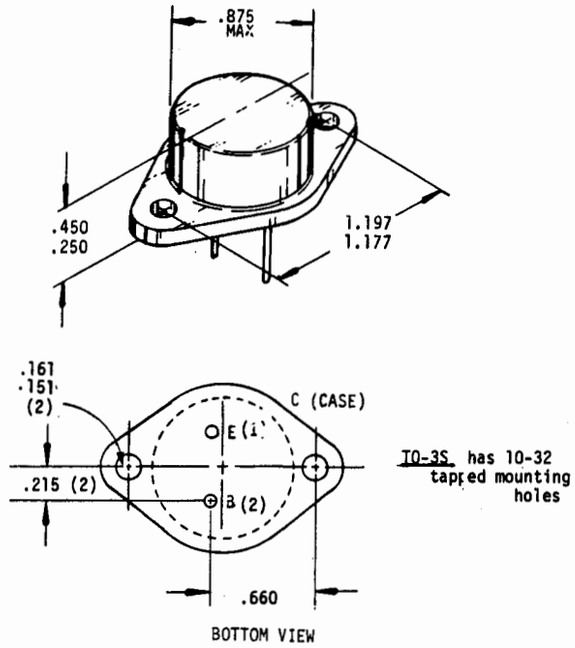

TO-3S has 10-32 tapped mounting holes

BOTTOM VIEW

	LEADS		
	1	2	Case
SCR	C	G	A

TO-41

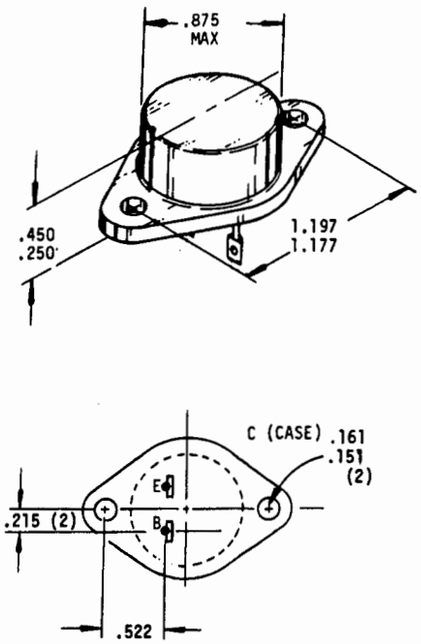

BOTTOM VIEW

TO-66

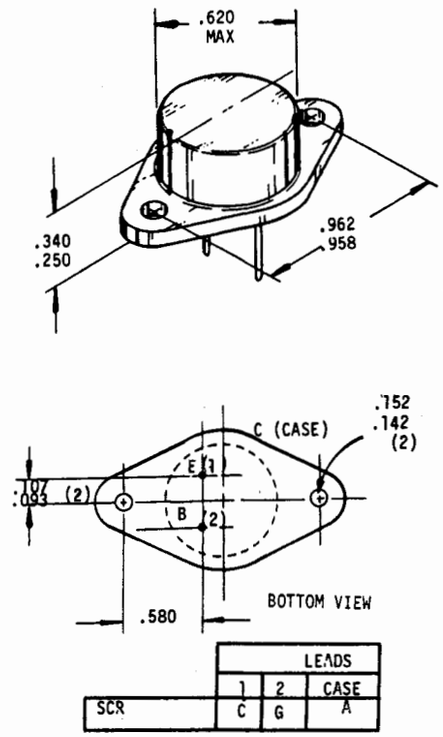

BOTTOM VIEW

	LEADS		
	1	2	CASE
SCR	C	G	A

TRANSISTOR CASE DRAWINGS (CONT)

9

TO-5

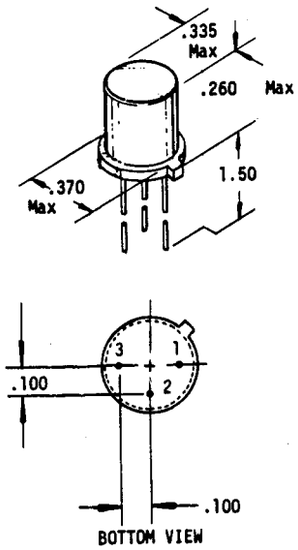

	LEADS		
	1	2	3
Small Signal	E	B	C
FETS	S	D	G
SCR	C	G	A

TO-5C has 4th lead to case
TO-5M has metal Header

TO-8

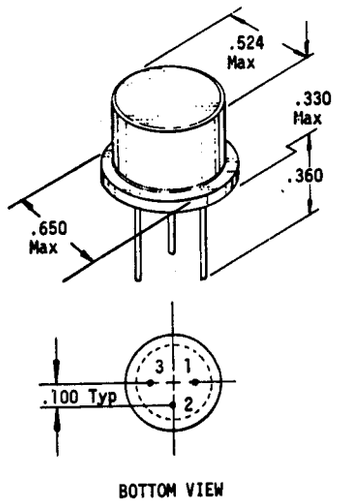

	LEADS		
	1	2	3
Small Signal	E	B	C
SCR	C	G	A

TO-18

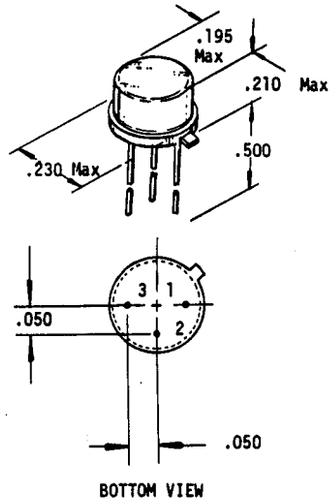

		LEADS		
		1	2	3
	Small Sig & SCR	E	B	C
(A)	FET	D	S	G
(B)	FET	S	G	D
(C)	FET	S	D	G

TO-39

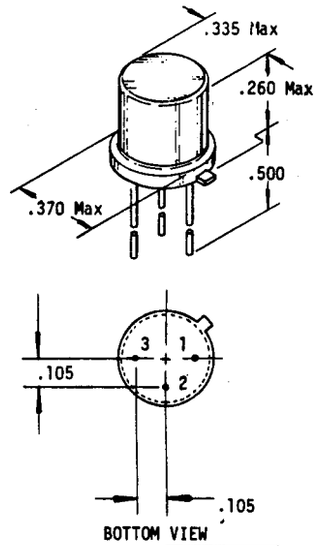

		LEADS		
		1	2	3
	SMALL SIGNAL	E	B	C
(A)	FET	S	G	D
(B)	FET	G	D	S

151-1104-00 is shorter (.185 max.)

TO-46

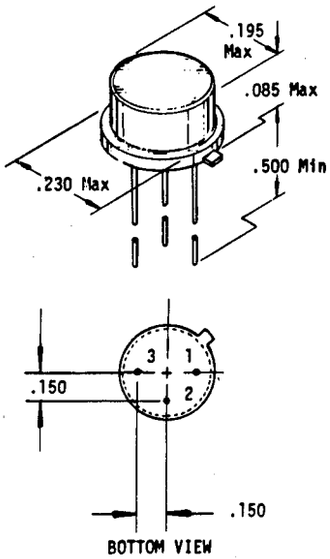

	LEADS		
	1	2	3
SMALL SIGNAL	E	B	C

TO-48

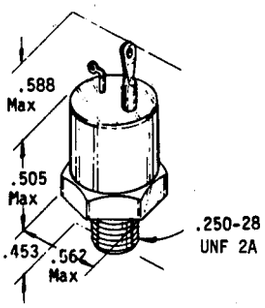

	LEADS		
	1	2	3
SCR	G	C	A

TO-52

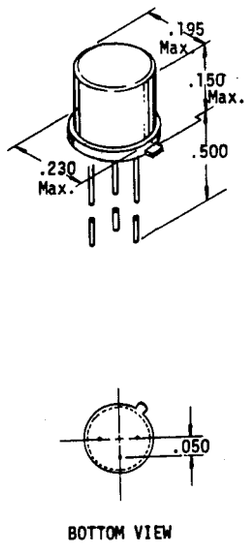

TO-61

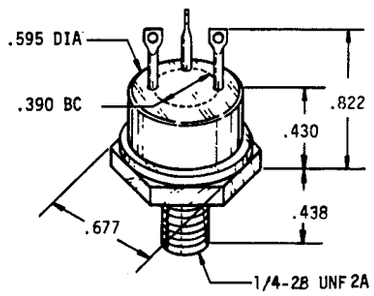

TRANSISTOR CASE DRAWINGS (CONT)

TO-64

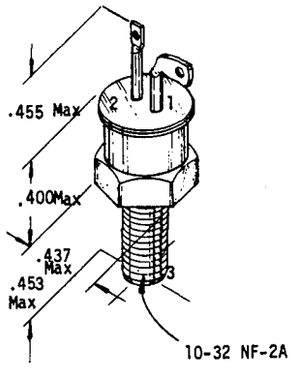

	LEAD		
	1	2	3
Scr	G	A_1	A_2

TO-65

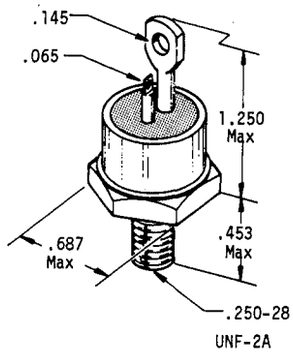

TO-71

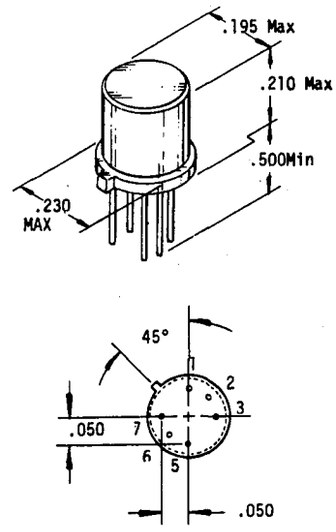

BOTTOM VIEW

	LEADS		
	1-5	2-6	3-7
FET	S	D	G

TO-72

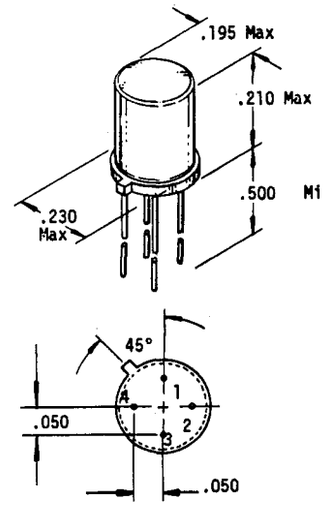

BOTTOM VIEW

		LEADS			
		1	2	3	4
(A)	Small Signal	E	B	C	Case
(B)	Small Signal	B	E	C	Case
(C)	FET	S	D	G	Case
(D)	FET	S	G	D	Case
(E)	FET	D	S	G	Case
(F)	FET	D	G-2	G-1	S
(G)	FET	D	G	Sub	S
(H)	Unijunction	E	B_1		B_2

TO-77

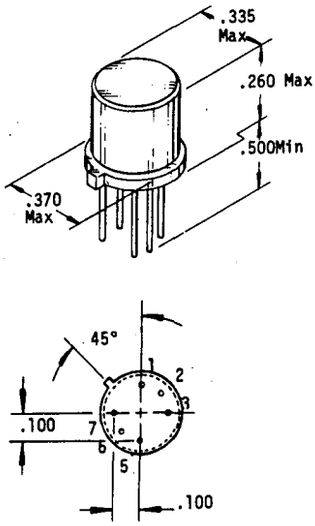

BOTTOM VIEW

LEADS					
1	2	3	5	6	7
C	B	E	E	B	C

TO-78

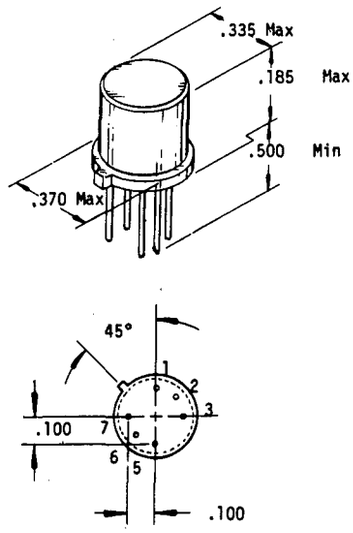

BOTTOM VIEW

		LEADS					
		1	2	3	5	6	7
	Small Signal	C	B	E	E	B	C
(A)	FET	S	D	G	S	D	G
(M)	FET	S	D	G	G	D	S
	FET	G	D	S	S	D	G

TO-92 TO-92+ (TO-237)

Contour of top of pkg uncontrolled

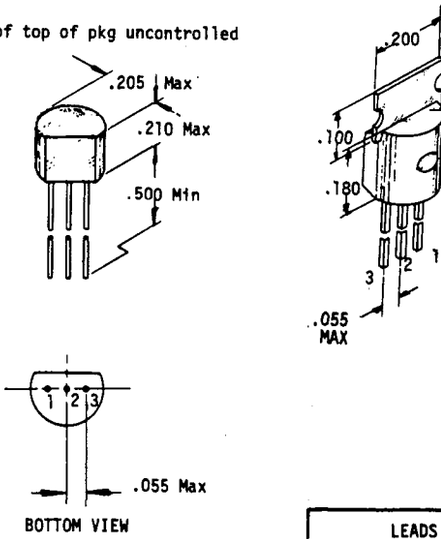

BOTTOM VIEW

		LEADS		
		1	2	3
	Small Signal	E	B	C
(A)	Small Signal	C	B	E
(B)	Small Signal	B	E	C
	FET	S	D	G
(C)	FET	G	S	D
(D)	FET	S	G	D
(E)	FET	G	D	S
(F)	FET	D	S	G
	SCR	C (MT)	G	A (M2)

151-1042-00 Lead Length .250 and leads formed into TO-18 configuration.

151-1070-00 S D G with Bent Leads.

TRANSISTOR CASE DRAWINGS (CONT)

9

TO-98

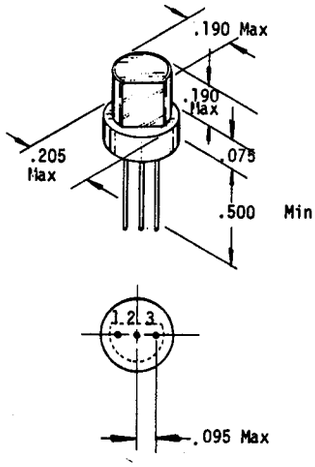

BOTTOM VIEW

	LEADS		
	1	2	3
Small Signal	E	C	B
Unijunction	A	G	C

TO-98A has leads formed into TO-18 Configuration

TO-99

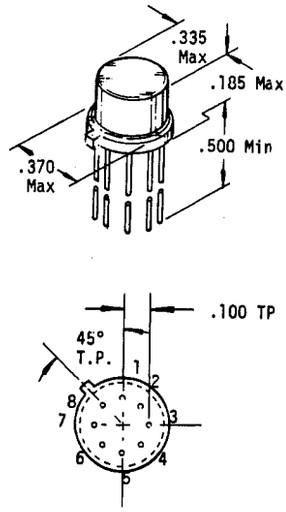

BOTTOM VIEW

		LEADS							
		1	2	3	4	5	6	7	8
A	FET	S	D	G	N/C	S	D	G	N/C
B	FET	S	G	D	C	D	G	S	N/C
C	FET	S	D	G	Sub	S	D	G	N/C

TO-105

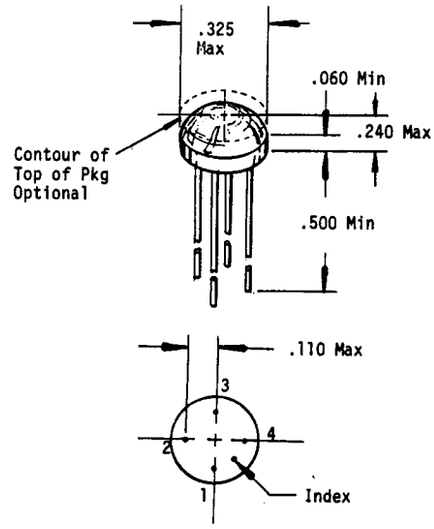

BOTTOM VIEW

	LEADS		
	1	2	3
Small Signal	E	B	C

TO-106

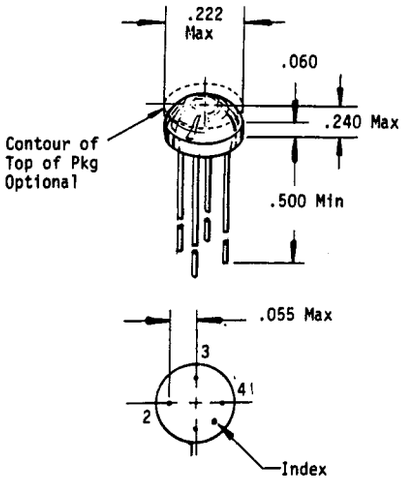

BOTTOM VIEW

	LEADS			
	1	2	3	4
Small Signal	E	B	C	–
FET	S	D	G	–

X-55

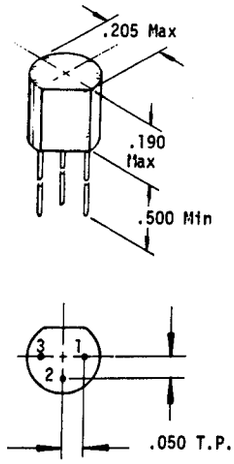

BOTTOM VIEW

	LEADS		
	1	2	3
Small Signal	E	B	C
FET	D	S	G

MU-10

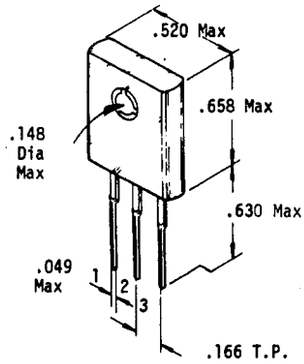

	LEADS		
	1	2	3
SCR	C	A	G

MU-47

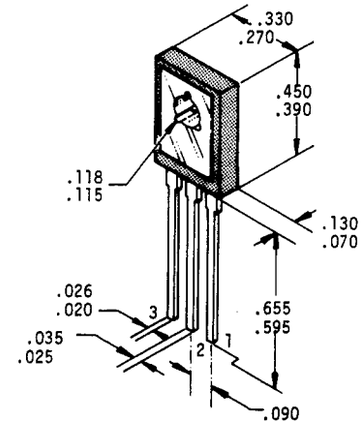

	LEADS		
	1	2	3
SCR	C	A	G

TRANSISTOR CASE DRAWINGS (CONT)

TO-117

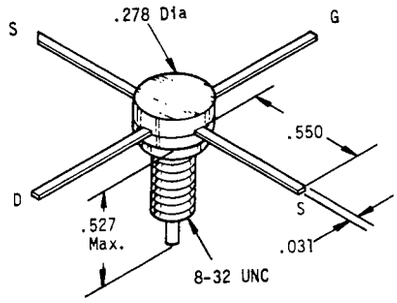

MICRO T (MICRO 23)

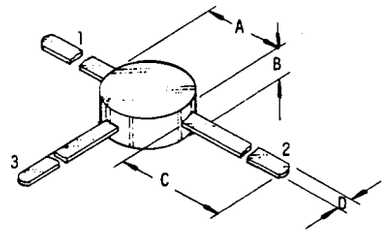

	A	B	C	D	LEADS 1	2	3
Small Signal U23	.138	.078	.158	.024	B	E	C
Small Signal U23a	.158	.078	.158	.024	B	E	C
FET U23b	.138	.057	.181	.025	S	D	G

MICRO T (MICRO 43)

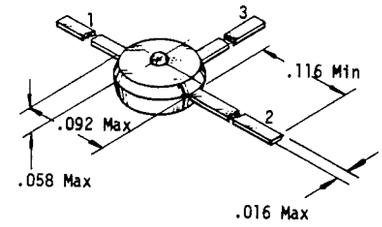

LEADS		
1	2	3
B	C	E

144D-04

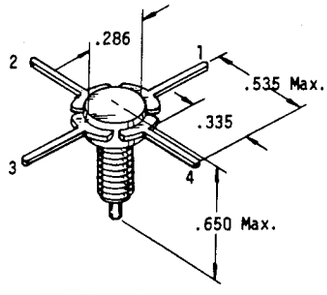

LEADS			
1	2	3	4
E	B	E	C

MICRO X (M100)

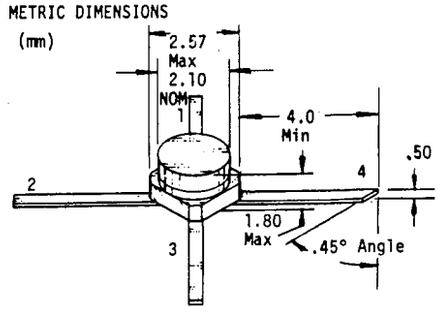

LEADS			
1	2	3	4
E	C	E	B

MICRO X (#320)

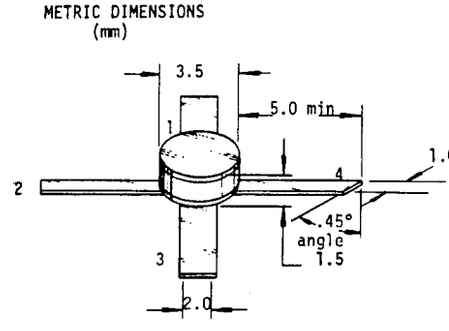

LEADS			
1	2	3	4
E	C	E	B

MACRO T

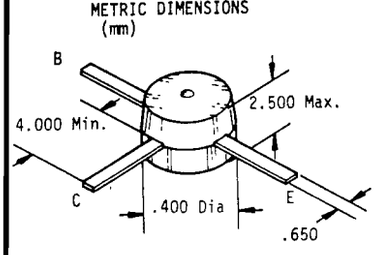

151-0206-00

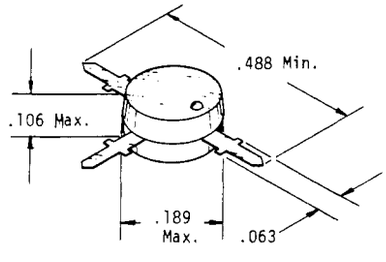

151-0475-00

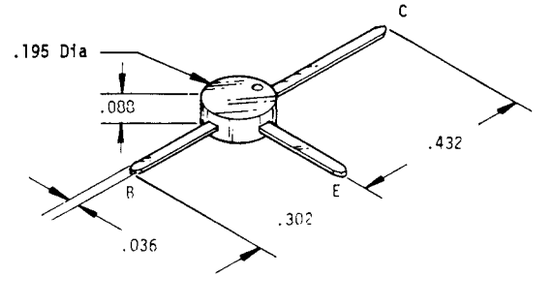

151-0752-00

TRANSISTOR CASE DRAWINGS (CONT)

9

CC-6

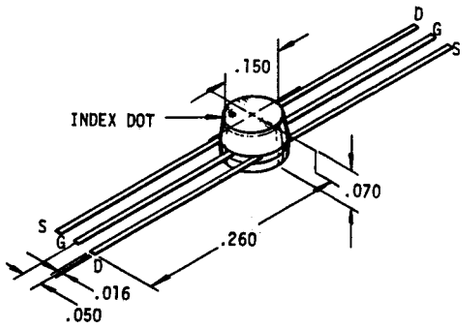

SC-18

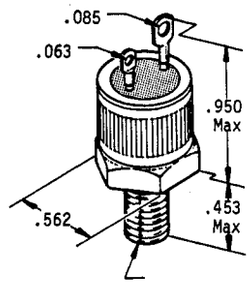

SC-82

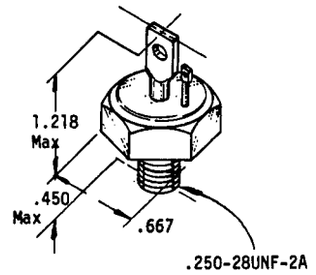

SOT-23 (TO-236)

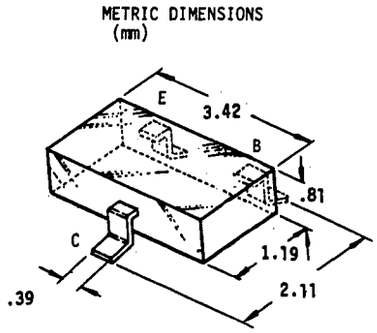

SOT-89

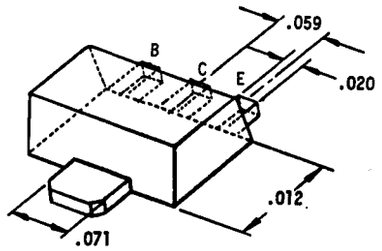

T90

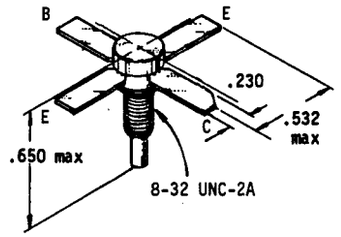

W54

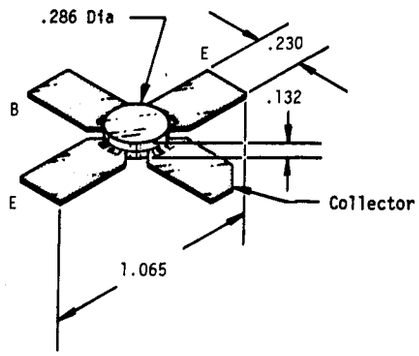

PRESSFIT TRIAC

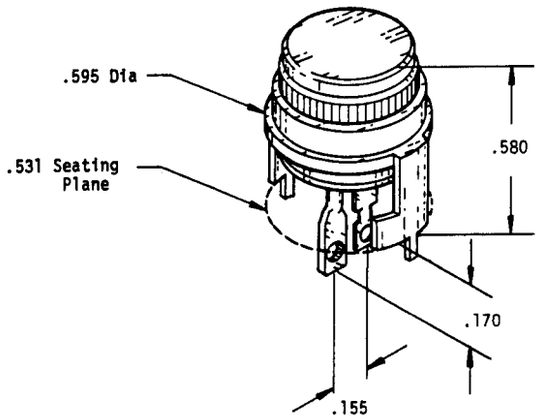

TRANSISTOR CROSS REFERENCE INDEX

TEK PART NUMBER TO VENDOR NUMBER

PART NUMBER	** ND	JEDEC OR VENDOR NUMBER	TYPE (CATALOG SECTION)	INDEX CHAR.	PAGE NO.	§§ ST
151-0001-00	X	2N301	Pwr, PNP, GE		6-22	NP
151-0002-00	X	2N77	Pwr, PNP, GE		6-22	CR
151-0003-00	X	2N407	Sig, PNP, GE		6-17	NP
151-0004-00	X	2N214	Sig, NPN, GE		6-17	EN
151-0005-00	X	2N212	Sig, NPN, GE		6-17	NP
151-0006-00	X	2N307A	Pwr, PNP, GE		6-22	NP
151-0007-00	X	2N270	Sig, PNP, GE		6-17	NP
151-0008-00	X	2N544	Sig, PNP, GE		6-17	NP
151-0009-00	X	2N3015	Pwr, PNP, GE		6-22	NP
151-0010-00	X	2N404	Sig, PNP, GE		6-17	NP
151-0011-00	X	CT1200	Sig, NPN, GE		6-17	NP
151-0012-00	X	2N671	Pwr, PNP, GE		6-22	OB
151-0013-00	X	2N1126	Pwr, PNP, GE		6-22	NP
151-0014-00	X	2N307	Pwr, PNP, GE		6-22	OB
151-0015-00	X	2N1516	Sig, PNP, GE		6-17	NP
151-0016-00	X	2N585	Sig, NPN, GE		6-17	DL
151-0017-00	X	2N373	Sig, PNP, GE		6-17	DL
151-0018-00	X	2N250	Pwr, PNP, GE		6-22	OB
151-0019-00	X	2N591	Sig, PNP, GE		6-22	OB
151-0020-00	X	2N447A	Sig, NPN, GE		6-22	NP
151-0021-00	X	2N597	Sig, PNP, GE		6-22	NP
151-0021-01		2N658	PNP, GE			NP
151-0022-00	X	2N599	Sig, PNP, GE		6-22	DL
151-0023-00	X	2N499	Sig, PNP, GE		6-22	DL
151-0024-00	X	2N588	Sig, PNP, GE		6-22	DL
151-0025-00	X	2N226	Sig, PNP, GE		6-22	NP
151-0026-00	X	2N1102	Sig, NPN, GE		6-22	NP
151-0027-00	X	2N700	Sig, PNP, GE		6-22	LS
151-0027-01	X	2N700	Sig, PNP, GE			DL
151-0028-00	X	2N204	Sig, NPN, GE		6-22	EN
151-0029-00	X	2N478	Sig, NPN, GE		6-22	NP
151-0030-00	X	2N647	Sig, NPN, GE		6-22	NP
151-0031-00	X	2N1517	Sig, PNP, GE		6-22	CS
151-0032-00	X	2N695	Sig, PNP, GE		6-22	NP
151-0033-00	X	2N169A	Sig, NPN, GE		6-22	OB
151-0034-00	X	2N544	Pwr, PNP, GE		6-22	NP
151-0035-00	X	2N1592	Sig, NPN, Si		6-17	OB
151-0036-00	X	2N601	Sig, PNP, GE		6-17	OB
151-0037-00	X	2N675	Sig, PNP, GE		6-17	NP
151-0038-00	X	2N636	Sig, NPN, GE		6-17	OB
151-0039-00	X	2N1381	Sig, PNP, GE		6-17	CR
151-0040-00	X	2N1302	Sig, NPN, GE		6-17	CS
151-0041-00	X	2N1303	Sig, PNP, GE		6-17	LR
151-0042-00	X	2N1378	Sig, PNP, GE		6-17	LR
151-0043-00	X	2N511	Pwr, PNP, GE		6-22	NP
151-0044-00	X	2N705	Sig, PNP, GE		6-17	CS
151-0045-00	A	2N1637S	Sig, PNP, GE		6-17	OB
151-0045-01	X	Selected	Sig, PNP, GE			NP
151-0045-02	X	Selected	Sig, NPN, GE			NP
151-0046-00	X	2N1529	Pwr, PNP, GE		6-22	CS
151-0046-01	X	2N1529	Pwr, PNP, GE			DL
151-0047-00	X	2N1631	Sig, PNP, GE		6-17	OB
151-0048-00	X	2N1632	Sig, PNP, GE		6-17	OB
151-0049-00	X	2N636	Sig, NPN, GE		6-17	NP
151-0050-00	X	2N1478	Sig, PNP, GE		6-17	DL
151-0051-00	X	2N374	Sig, PNP, GE		6-17	NP
151-0052-00	X	2N636	Sig, PNP, GE		6-17	NP
151-0053-00	X	2N469A	Sig, PNP, GE		6-17	OB
151-0054-00	X	2N1754	Sig, PNP, GE		6-17	LS
151-0055-00	X	2N398A	Sig, PNP, GE		6-17	OB
151-0056-00	X	TI483	Sig, NPN, Si		6-17	OB
151-0057-00	X	2N1905	Pwr, PNP, GE		6-22	NP
151-0058-00	X	RTS204	Sig, NPN, Si		6-17	CR
151-0058-01	X	HT403	Sig, PNP, Si			DL
151-0059-00	X	S3430	Sig, PNP, Si		6-17	NP
151-0060-00	X	2N1545	Pwr, PNP, GE		6-22	NP
151-0061-00	X	SS2590	Sig, PNP, GE		6-17	DL
151-0062-00	X	GA1392	Sig, NPN, GE		6-17	NP
151-0063-00	X	2N2207	Sig, PNP, GE		6-17	NP
151-0063-01	X	2N2654	Sig, PNP, GE			NP
151-0064-00	X	2N650	Sig, PNP, GE		6-18	NP
151-0065-00	X	2N1991	Sig, PNP, Si		6-18	OB
151-0066-00	X	2N1700	Pwr, NPN, Si		6-22	NP
151-0067-00	X	2N1143	Sig, PNP, GE		6-18	NP
151-0068-00	X	2N636	Sig, NPN, GE		6-18	NP
151-0068-01	X	2N6361	Sig, NPN, GE			NP
151-0069-00	X	2N1304	Sig, NPN, GE		6-18	CS
151-0070-00	X	2N1377	Sig, PNP, GE		6-18	NP
151-0071-00	X	2N1305	Sig, PNP, GE		6-18	LR
151-0072-00	X	2N1308	Sig, NPN, GE		6-18	LS
151-0073-00	X	TI943	Sig, NPN, GE		6-18	NP
151-0074-00	X	2N336	Sig, NPN, Si		6-18	DL
151-0075-00	X	2N769	Sig, PNP, GE		6-18	NP
151-0076-00	X	2N2048	Sig, PNP, GE		6-18	CS
151-0077-00	X	2N797	Sig, NPN, GE		6-18	NP
151-0078-00	X	2N1997	Sig, PNP, GE		6-18	OB
151-0079-00	X	2N1429	Pwr, PNP, Si		6-22	OB
151-0080-00	X	2N706	Sig, NPN, Si		6-18	CR
151-0081-00	X	2N1749	Sig, PNP, GE		6-18	NP
151-0082-00	X	TI495	Pwr, NPN, Si		6-22	OB
151-0083-00	X	2N964	Sig, PNP, GE		6-18	LR
151-0084-00	X	2N1225	Sig, PNP, GE		6-18	LS
151-0085-00	X	2N741	Sig, PNP, GE		6-18	OB
151-0086-00	X	2N955	Sig, NPN, GE		6-18	NP
151-0087-00	X	2N2905	Sig, PNP, Si		6-18	CR
151-0088-00	X	2N700	Sig, PNP, GE		6-18	OB
151-0089-00	X	2N962	Sig, PNP, GE		6-18	NP
151-0090-00	X	2N2218	Sig, NPN, Si		6-18	NP
151-0091-00	X	2N1226	Sig, PNP, GE		6-18	OB
151-0092-00	X	2N711A	Sig, PNP, GE		6-18	DL
151-0093-00	X	2N2043	Sig, PNP, GE		6-18	NP
151-0094-00	X	2N835	Sig, NPN, Si		6-18	NP
151-0095-00	X		Sig, NPN, Si		6-18	NP
151-0096-00	N	2N1893S	Sig, NPN, Si	Line 7	6-6 & 12	CR
151-0097-00	X	2N955	Sig, NPN, GE		6-18	NP
151-0098-00	X	TI484	Sig, NPN, Si		6-18	OB
151-0099-00	X	2N2219	Sig, NPN, Si		6-18	NP
151-0100-00	X	2N2191	Sig, PNP, GE		6-18	CS
115-0101-00	X	2N2137A	Pwr, PNP, GE		6-22	NP
151-0102-00	X	SP1389	Pwr, PNP, GE		6-22	CR
151-0103-00	A	2N2219A	Sig, NPN, Si	Line 15	6-3 & 12	CR
151-0103-01	N	2N2219	Sig, NPN, Si			CR
151-0103-02	N	Selected	Sig, NPN, Si			CR
151-0104-00	A	2N2484	Sig, NPN, Dual	Line 5	6-10 & 14	CR
151-0105-00	X	SM2335	Sig, NPN, Si		6-18	OB
151-0106-00	X	2N2375	Sig, PNP, GE		6-18	OB
151-0107-00	X	2N967	Sig, PNP, GE		6-18	LS
151-0108-00	A	2N2501	Sig, NPN, Si	Line 1	6-2 & 12	CR
151-0108-01	A	2N2501	Sig, NPN, Si			CR
151-0109-00	N	2N918	Sig, NPN, Si	Line 5	6-8 & 12	CR
151-0109-01	N	2N918	Sig, PNP, GE			CS
151-0109-02		2N918	Screened			PP
151-0110-00	X	507C768H02	Pwr, NPN, Si		6-22	OB
151-0111-00	X	507C768H01	Pwr, NPN, Si		6-22	OB
151-0112-00	X	2N1489	Pwr, NPN, Si		6-22	OB
151-0113-00	X	2N1488	Pwr, NPN, Si		6-22	OB
151-0114-00						DL
151-0115-00	X	2N1142	Sig, PNP, GE		6-18	EN
151-0116-00	X	2N1384	Sig, PNP, GE		6-18	DL
151-0117-00						DL
151-0118-00	X	2N2339	Pwr, NPN, Si		6-22	OB
151-0119-00		2N1131	Sig, PNP, Si		6-18	NP
151-0120-00	X	2N2475	Sig, NPN, Si		6-18	NP
151-0120-01	X	2N2475	Sig, NPN, Si			NP
151-0120-02	X	2N2475	Sig, NPN, Si			DL
151-0120-03		2N2475 Fmly	NPN, Si			IN
151-0121-00	N	2N2219A	Sig, NPN, Si	Line 7	6-3 & 12	CR
151-0121-01		2N2219A	Selected			DL
151-0122-00	X	S5909	Sig, PNP, Si		6-18	CS
151-0123-00		2N976	Sig, PNP, GE		6-18	NP
151-0123-01	X	2N916	Sig, PNP, GE			DL
151-0124-00	A	2N3501S	Sig, NPN, Si	Line 15	6-6 & 12	CR
151-0124-01		2N3501	NPN, Si			NP
151-0124-02	N	Selected	Sig, NPN, Si		8-2	CR
151-0124-03	X	2N3501	Sig, NPN, Si			OT
151-0124-04	X	Selected	Sig, NPN, Si			DL
151-0124-05		2N3501	NPN, Si			TC
151-0125-00	X	2N1701	Sig, NPN, Si		6-22	CS
151-0126-00	A	2N2484	Sig, NPN, Si	Line 5	6-4 & 12	CR
151-0126-01	N	Selected	Sig, NPN, Si		8-2	CR

§§ FOR STATUS CODES, SEE PAGE 9-15.

** FOR NEW DESIGN CODES, SEE PAGE 9-26.

TRANSISTOR CROSS REFERENCE INDEX (CONT)

TEK PART NUMBER TO VENDOR NUMBER

PART NUMBER	** ND	JEDEC OR VENDOR NUMBER	TYPE (CATALOG SECTION)	INDEX CHAR.	PAGE NO.	§§ ST
151-0127-00	A	2N2369	Sig, NPN, Si	Line 9	6-2 & 13	CR
151-0127-01		2N2369 Fmly	NPN, Si			DL
151-0127-02		2N2369 Fmly	NPN, Si			TC
151-0127-03		BSX20	NPN, Si			TC
151-0127-04	N	Selected	Sig, NPN, Si		8-2	CR
151-0127-05		2N2369 Fmly	NPN, Si			TC
151-0128-00	X	2N2140	Pwr, PNP, GE		6-22	OB
151-0129-00	X	2N2207	Sig, PNP, GE		6-18	DL
151-0130-00	X	2N1195	Sig, PNP, GE		6-18	DL
151-0131-00	X	2N964	Sig, PNP, GE		6-18	LR
151-0131-01	X	Selected	Sig, PNP, GE			DL
151-0132-00	X	2N2156	Pwr, PNP, GE		6-22	CS
151-0133-00	A	2N3251	Sig, PNP, Si	Line 38	6-3 & 15	CR
151-0133-01	X	2N3251	Sig, PNP, Si			NP
151-0133-02		2N3251	Sig, PNP, Si			DL
151-0133-03	N	2N3251	Sig, PNP, Si			CR
151-0134-00	A	2N2905A	Sig, PNP, Si	Line 32	6-3 & 15	CR
151-0134-01	X	2N2905A	Sig, PNP, Si			DL
151-0134-02	X	Selected	Sig, PNP, Si			DL
151-0135-00	X	2N2635	Sig, PNP, GE		6-18	NP
151-0136-00	A	2N3053	Sig, NPN, Si	Line 4	6-3 & 12	CR
151-0136-01	X	2N3053	Sig, NPN, Si			OB
151-0136-02	X	2N3053	Sig, NPN, Si			NP
151-0136-03	N	Selected	Sig, NPN, Si	Line 5	6-3 & 12	CR
151-0137-00	X	2N2148	Pwr, PNP, GE		6-22	CR
151-0138-00	N	2N2857	Sig, NPN, Si	Line 2	6-5 & 13	CS
151-0139-00	A	2N918	Sig, NPN, Dual	Line 8	6-10 & 14	CR
151-0139-01	N	D/2N918	Sig, NPN, Dual			CR
151-0140-00	A	2N3055	Pwr, NPN, Si	15.	6-21	CR
151-0140-01	X	Selected	Pwr, NPN, Si			NP
151-0140-02	X	Selected	Pwr, NPN, Si			DL
151-0140-03	N	2N3055	Pwr, NPN, Si			CR
151-0141-00	X	40251	Pwr, NPN, Si		6-22	CR
151-0141-01	X	40251	Pwr, NPN, Si			CR
151-0142-00	N	2N4260	Sig, PNP, Si	Line 15	6-7 & 15	CR
151-0143-00	X	2N2996	Sig, PNP, GE		6-18	DL
151-0144-00	X	2N1743	Sig, PNP, GE		6-18	OB
151-0145-00	X	2N1744	Sig, PNP, GE		6-18	OB
151-0146-00	X	2N1745	Sig, PNP, GE		6-18	CS
151-0147-00	X	2N1747	Sig, PNP, GE		6-18	OB
151-0148-00	N	40250	Pwr, NPN, Si	4.	6-20	CR
151-0148-01	X	Selected	Pwr, NPN, Si			NP
151-0148-02	N	Selected	Pwr, NPN, Si			CR
151-0149-00	N	2N3441	Pwr, NPN, Si	3.	6-20	CR
151-0149-01	N	2N3441	Pwr, NPN, Sel			CR
151-0150-00	A	2N3440	Sig, NPN, Si	Line 2	6-6 & 12	CR
151-0150-01	N	2N3440	Sig, NPN, Si			CS
151-0150-02	X	Selected	Sig, NPN, Si			DL
151-0150-03	N	Selected	Sig, NPN, Si			CR
115-0151-00	A	2N929	Sig, NPN, Si		6-18	NP
151-0152-00	X					NP
151-0153-00	X	2N2923	Sig, NPN, Si		6-18	CS
151-0154-00	X	2N2924	Sig, NPN, Si		6-18	CS
151-0155-00	X	2N2925	Sig, NPN, Si		6-18	CR
151-0156-00						DL
151-0157-00	X	40232	Sig, NPN, Si		6-18	CS
151-0158-00	X	DTG2400	Pwr, PNP, GE		6-22	CS
151-0159-00	N	2N3605	Sig, NPN, Si		6-18	NP
151-0160-00	N	2N3137	Sig, NPN, Si		6-18	NP
151-0161-00	A	2N3284	Sig, PNP, GE		6-18	CS
151-0162-00	A	2N3324	Sig, PNP, GE		6-18	LS
151-0163-00	X	2N1899	Pwr, NPN, Si		6-22	NP
151-0164-00	A	A5T2907	Sig, PNP, Si	Line 29	6-3 & 15	CR
151-0164-01		A5T2907	Sig, PNP, Si	Line 30	6-3 & 15	PP
151-0165-00	X	2N3614	Pwr, PNP, GE		6-22	CR
151-0166-00	X	2N2923	Sig, NPN, Si		6-18	CS
151-0167-00	N	2N4260	Sig, PNP, Si	Line 16	6-7 & 15	CS
151-0168-00	X	40264	Pwr, NPN, Si		6-22	NP
151-0169-00	A	2N3439	Sig, NPN, Si	Line 3	6-6 & 12	CR
151-0169-01	N	Selected	Sig, NPN, Si			CR
151-0170-00	X	2N2147	Pwr, PNP, GE		6-22	OB
151-0171-00	X	C444	Sig, NPN, Si		6-18	NP
151-0172-00		OC36	PNP, GE			IN
151-0173-00	X	2N3478	Sig, NPN, Si		6-19	CS
151-0174-00	X	2N3403	Sig, NPN, Si		6-19	CR
151-0175-00	X	2N3662	Sig, NPN, Si		6-19	CS
151-0176-00	A	2N2222A	Sig, NPN, Si	Line 6	6-10 & 14	CR
151-0177-00	X	2N916	Sig, NPN, Si		6-19	OB
151-0178-00	A	2N3308	Sig, PNP, Dual	Line 14	6-10 & 16	CR
151-0179-00	X	2N3877A	Sig, NPN, Si		6-19	NP
151-0179-01	X	40251	Sig, NPN, Si			DL
151-0180-00	X	40235	Sig, NPN, Si		6-19	NP
151-0181-00	X	40242	Sig, NPN, Si		6-19	LS
151-0182-00	X	2N1307	Sig, PNP, GE		6-19	CS
151-0183-00	N	2N2192	Sig, NPN, Si	Line 1	6-3 & 12	CR
151-0183-01	X	Selected	Sig, NPN, Si			CS
151-0184-00	X	SM7744	Sig, NPN, Si		6-19	CS
151-0185-00	X	2N2929	Sig, PNP, GE		6-19	DL
151-0186-00		ST64	NPN, Si			IN
151-0187-00	X	2N2207	Sig, PNP, GE		6-19	DL
151-0188-00	A	2N3906	Sig, PNP, Si	Line 34	6-3 & 15	CR
151-0188-01	N	2N3906	Sig, PNP, Si			CR
151-0188-02	X	Selected	Sig, PNP, Si			NP
151-0188-03	N	Selected	Sig, PNP, Si		8-3	CR
151-0188-04		2N3906	PNP, Si			IN
151-0188-05		2N3906	Sig, PNP, Si	Line 35	6-3 & 15	PP
151-0189-00	X	U15551	Sig			
151-0190-00	A	2N3904	Sig, NPN, Si	Line 12	6-3 & 12	CR
151-0190-01	N	2N3904	Sig, NPN, Si			CR
151-0190-02	N	2N3904	Sig, NPN, Si			CR
151-0190-03	N	2N3904	Sig, NPN, Si			NP
151-0190-04	N	TE3904	Sig, NPN, Si			PP
151-0190-05	N	Selected	Sig, NPN, Si		8-3	CR
151-0190-06	N	2N3904	Sig, NPN, Si			CR
151-0190-07	N	Selected	Sig, NPN, Si			CR
151-0190-08	N	Selected	Sig, NPN, Si			CR
151-0190-09		2N3904	Sig, NPN, Si	Line 13	6-3 & 12	PP
151-0191-00		2S301	NPN			IN
151-0192-00	A	MPS6521	Sig, NPN, Si	Line 11	6-4 & 12	CR
151-0192-01	X	Selected	Sig, NPN, Si			NP
151-0192-02	N	TPS6521	Sig, NPN, Si			OB
151-0192-03	N	Selected	Sig, NPN, Si		8-3	CR
151-0193-00	A	2N3960	Sig, NPN, Si	Line 17	6-5 & 13	CR
151-0194-00	X	2N3959	Sig, NPN, Si		6-19	DL
151-0195-00	A	MPS6515	Sig, NPN, Si	Line 10	6-4 & 12	CR
151-0195-01	N	MPS6515	Sig, NPN, Si			CR
151-0196-00	X	2N3440	Pwr, NPN		6-22	NP
151-0197-00	X	MPS3640	Sig, PNP, Si		6-19	DL
151-0198-00	A	MPS918	Sig, NPN, Si	Line 6	6-8 & 12	CR
151-0198-01	N	MPS918	Sig, NPN, Si			CR
151-0198-02	N	Selected	Sig, NPN, Si		8-4	CR
151-0198-03	N	Ckd & Mtchd	Sig, NPN, Si		8-20	CR
151-0198-04		MPS918	Sig, NPN, Si	Line 7	6-8 & 12	PP
151-0199-00	A	2N3640	Sig, PNP, Si	Line 10	6-2 & 15	CR
151-0199-01	X	MPS3640	Sig, PNP, Si			NP
151-0199-02	N	Selected	Sig, PNP, Si		8-4	CR
151-0199-03	N	2N3640	Sig, PNP, Si			NP
151-0199-04	N	MPS3640	Sig, PNP, Si			CR
151-0199-05		MPS3640	Sig, PNP, Si	Line 11	6-2 & 15	PP
151-0200-00	A	2N3499S	Sig, NPN, Si	3.	6-12 & 20	CR
151-0201-00	N	2N3739	Pwr, NPN, Si	3.	6-20	CR
151-0202-00	N	2N4261	Sig, PNP, Si	Line 20	6-7 & 15	CR
151-0203-00		U2970/2	PNP, Si			DL
151-0204-00		V405	PNP, Si			IN
151-0205-00	N	2N3959	Sig, NPN, Si	Line 16	6-5 & 13	OB
151-0206-00	A	2SC288C	Sig, NPN, Si	Line 4	6-5 & 13	CR
151-0207-00	A	GET3451	Sig, NPN, Si	Line 9	6-4 & 12	CR
151-0208-00	A	2N4036S	Sig, PNP, Si	Line 24	6-3 & 15	CR
151-0208-01	X	Checked	Sig, PNP, Si			NP
151-0208-02	A	2N4036S	Sig, PNP, Si	Line 23	6-3 & 15	CR
151-0208-03	X	Selected	Sig, PNP, Si			DL
151-0208-04	N	Selected	Sig, PNP, Si		8-4	CR
151-0209-00	N	2N3442	Pwr, NPN, Si	10.	6-21	CR
151-0210-00	N	2N3584	Pwr, NPN, Si	2.	6-20	CR
151-0211-00	A	2N3866	Sig, NPN, Si	Line 1	6-8 & 12	CR
151-0211-01	N	2N3866	Sig, NPN, Si	Line 4		LR
151-0211-02	N	Selected	Sig, NPN, Si		8-5	CR
151-0212-00	A	2N6304	Sig, NPN, Si	Line 13	6-5 & 13	CR
151-0212-01		2N3572	NPN, Si			NP
151-0212-02		BFY90	NPN, Si			DL

TRANSISTOR CROSS REFERENCE INDEX (CONT)

TEK PART NUMBER TO VENDOR NUMBER

PART NUMBER	** ND	JEDEC OR VENDOR NUMBER	TYPE (CATALOG SECTION)	INDEX CHAR.	PAGE NO.	§§ ST
151-0213-00	X	2N4251	Sig, NPN, Si		6-19	NP
151-0213-01	X	NE64310D	Sig, NPN, Si			CR
151-0214-00	N	2N3495	Sig, PNP, Si	Line 27	6-6 & 15	CR
151-0215-00	X	2N4080			6-19	DL
151-0216-00	A	MPS6523	Sig, PNP, Si	Line 15	6-4 & 15	CR
151-0216-01	X	Checked	Sig, PNP, Si			NP
151-0216-02	N	Selected	Sig, PNP, Si		8-5	CR
151-0216-03		2SA1090-GR	PNP, Si			SC
151-0216-04		MPS6523	Sig, PNP, Si	Line 19	6-4 & 15	PP
151-0217-00	N	40250	Pwr, NPN, Si	4.	6-20	CR
151-0218-00	N	2N4348	Pwr, NPN, Si	10.	6-21	CS
151-0219-00	A	2N4250	Sig, PNP, Si	Line 15	6-4 & 15	CR
151-0220-00	N	2N3906	Sig, PNP, Si	Line 41	6-3 & 15	CR
151-0220-01	X	Checked	Sig, PNP, Si			NP
151-0220-02	N	Selected	Sig, PNP, Si			DL
151-0220-03	A	2N3906	Sig, PNP, Si	Line 40	6-3 & 15	CR
151-0220-04	N	Selected	Sig, PNP, Si		8-5	CR
151-0220-05	N	Selected	Sig, PNP, Si		8-5	CR
151-0221-00	A	PN4258	Sig, PNP, Si	Line 15	6-2 & 15	CR
151-0221-01	X	Checked	Sig, PNP, Si			NP
151-0221-02	N	PN4258	Sig, PNP, Si			CR
151-0221-03		2N4258	PNP, Si			IN
151-0221-04	X	PN4258	Sig, PNP, Si			DL
151-0221-05	N	Selected	Sig, PNP, Si		8-5	CR
151-0221-06	N	Selected	Sig, PNP, Si		8-5	CR
151-0221-07		Ckd & Mtchd	PNP, Si		8-20	MP
151-0221-08		2N4258	Sig, PNP, Si	Line 16	6-2 & 15	PP
151-0222-00	X	2N4251	Sig, NPN, Si		6-19	NP
151-0223-00	A	2N5769	Sig, NPN, Si	Line 2	6-2 & 12	CR
151-0223-01	X	Checked	Sig, NPN, Si			NP
151-0223-02	X	2N5769	Sig, NPN, Si			OB
151-0223-03	N	Selected	Sig, NPN, Si		8-6	CR
151-0223-04	N	Selected	Sig, NPN, Si			CR
151-0223-05		2N4275	NPN, Si			MP
151-0224-00	N	2N3904	Sig, NON, Si	Line 14	6-3 & 12	CR
151-0224-01	N	2N3692	Sig, NPN, Si			LS
151-0224-02	N	Selected	Sig, NPN, Si		8-7	CR
151-0225-00	A	2N3563	Sig, NPN, Si	Line 4	6-8 & 13	CR
151-0225-01	X	2N3563	Sig, NPN, Si			DL
151-0225-02	X	2N3563	Sig, NPN, Si			DL
151-0225-03	N	2N3563	Sig, NPN, Sel			CR
151-0225-04	N	Mtchd Pair	Sig, NPN, Si			CR
151-0226-00	A	2N3767	Pwr, NPN, Si	4.	6-20	CR
151-0227-00	A	2N3741	Pwr, PNP, Si	4.	6-20	CR
151-0228-00	A	MPSA93	Sig, PNP, Si	Line 19	6-6 & 15	CR
151-0228-01		S21862	Selected			DL
151-0229-00	X	2SD28	Pwr, PNP			NP
151-0230-00	A	2SC1260	Sig, NPN, Si	Line 7	6-5 & 13	CR
151-0231-00	X	2SC756	Sig, NPN, Si		6-19	CS
151-0231-01		2SC756	NPN, Si, Sel			NP
151-0232-00	A	2N2484	Sig, NPN, Dual	Line 4	6-10 & 14	CR
151-0232-01	X	2N2919	Sig, NPN, Dual			DL
151-0232-02	N	2N2919	Sig, NPN, Si			CR
151-0232-03	N	2N2918	Sig, NPN, Si			CR
151-0232-04		ITS1276	NPN, Si, Dual			SC
151-0233-00		2SC805	NPN, Si, Dual			SC
151-0234-00	X	2SC805	Sig, NPN, Si			CS
151-0235-00	A	2N4890	Sig, PNP, Si	Line 25	6-3 & 15	CR
151-0236-00	A	IT120	Sig, NPN, Dual	Line 1	6-10 & 14	CR
151-0237-00	X	SDA1060	Sig, PNP, Si		6-19	DL
151-0238-00	X	2N1302	Sig, NPN, GE		6-19	CS
151-0239-00	N	2N4111	Pwr, NPN, Si	5.	6-20	CR
151-0240-00	N	2N4063	NPN, Si			NP
151-0240-01	N	2N4063	NPN, Si			CR
151-0241-00	A	2N3585	Pwr, NPN, Si	1.	6-20	CR
151-0242-00		MPS834	NPN, Si			TC
151-0243-00		T119	PNP, GE			OB
151-0244-00		2N3702	PNP, Si			TC
151-0245-00		2N1564T	NPN, Si			CS
151-0246-00		BS495A	NPN, Si			OB
151-0247-00		T126	PNP, GE			TC
151-0248-00		T118	PNP, GE			OB
151-0249-00	X	CS29015	NPN, Si		6-19	NP
151-0250-00	A	MPS5551	Sig, NPN, Si	Line 11	6-6 & 12	CR
151-0250-01	N	Selected	Sig, NPN, Si			CR

PART NUMBER	* ND	JEDEC OR VENDOR NUMBER	TYPE (CATALOG SECTION)	INDEX CHAR.	PAGE NO.	§§ ST
151-0251-00	A	2N4240	Pwr, NPN, Si	2.	6-20	CR
151-0252-00		FPT100A	Phototransistor		14-2	CR
151-0253-00	X	2N5308	Sig, NPN, Si		6-19	CR
151-0253-01	N	Selected	Sig, NPN, Si			CR
151-0254-00	A	2N5308	Sig, NPN, Si	Line 3	6-9 & 12	CR
151-0254-01		2N5308	NPN, Si			NP
151-0254-02	N	2N5308	Sig, NPN, Si			PP
151-0254-03		2N5308	Sig, NPN, Si	Line 4	6-9 & 12	PP
151-0255-00	X	MPS6516	PNP, Si			OB
151-0256-00	A	DTS411	Pwr, NPN, Si	3.5	6-20	CR
151-0256-01	N	Selected	Pwr, NPN, Si			CS
151-0257-00		2N1990U	NPN, Si			TC
151-0257-01		BF305	NPN, Si			TC
151-0257-03		FRB749	NPN, Si			TC
151-0258-00	A	2N4905	Pwr, PNP, Si	15.	6-21	CR
151-0259-00	N	2N3563	Sig, NPN, Si	Line 20	6-8 & 13	CR
151-0260-00	A	2N3724A	Sig, NPN, Si	Line 18	6-3 & 12	CR
151-0260-01	X	Checked	Sig, NPN, Si			NP
151-0260-02	N	2N5859	Sig, NPN, Si			CR
151-0261-00	A	2N3808	Sig, PNP, Dual	Line 15	6-10 & 16	CR
151-0261-01	A	2N3808	Sig, PNP, Dual	Line 16	6-10 & 16	CR
151-0262-00	A	2N5294	Pwr, NPN, Si	4.	6-20	CR
151-0263-00		U14064	NPN, Si			OB
151-0264-00			Pair			NP
151-0264-01			Pair			CS
151-0265-00		KEM103	FET, N-Chan, Si			CS
151-0266-00	N	2N3902	Pwr, NPN, Si	3.5	6-20	CR
151-0267-00	A	2N2857	Sig, NPN, Dual	Line 10	6-10 & 14	CR
151-0268-00	A	A485	Sig, NPN, Dual	Line 11	6-10 & 14	CR
151-0269-00	A	FMT1061	Sig, NPN	Line 5	6-5 & 13	CR
151-0269-01	N	Selected	Sig, NPN, Si			CR
151-0270-00	A	2N3495	Sig, PNP, Si	Line 28	6-6 & 15	CR
151-0270-01						CS
151-0270-02	X	S032714	PNP, Si, Sel			DL
151-0270-03	N	Selected	Sig, PNP, Si		8-7	CR
151-0271-00	A	A5T4261	Sig, PNP, Si	Line 18	6-7 & 15	CR
151-0271-01	N	2N4261	Sig, PNP, Sel			NP
151-0271-02	X	2N4261	Sig, PNP, Sel			DL
151-0271-03	N	Selected	Sig, PNP, Si			CR
151-0272-00	A	2N4261	Sig, PNP, Dual	Line 20	6-10 & 16	CR
151-0273-00	A	2N5249	Sig, PNP, Si	Line 6	6-4 & 12	CR
151-0274-00	A	2N3501S	Sig, NPN, Si	Line 16	6-6 & 12	CR
151-0274-01	N	Selected	Sig, NPN, Si		8-8	CR
151-0275-00	A	2N3771	Pwr, NPN, Si	30.	6-21	CR
151-0276-00	A	2N5087	Sig, NPN, Si	Line 13	6-4 & 15	CR
151-0276-01		2N5087	Sig, PNP, Si	Line 14	6-4 & 15	PP
151-0277-00	X	2N3933	Sig, NPN, Si		6-19	CS
151-0278-00		T116A	PNP, Si			NP
151-0279-00	A	SE7056	Sig, NPN, Si	Line 9	6-6 & 12	CR
151-0279-01	N	SE7056	Sig, NPN, Si			CR
151-0279-02	N	Selected	Sig, NPN, Si		8-8	CR
151-0279-03	N	Selected	Sig, NPN, Si		8-8	CR
151-0279-04	N	Selected	Sig, NPN, Si			CR
151-0280-00	A	2N4931	Sig, PNP, Si	Line 20	6-6 & 15	CR
151-0280-01	N	Selected	Sig, PNP, Si			CR
151-0281-00	A	2N5305	Sig, NPN, Si	Line 5	6-9 & 12	CR
151-0281-01	N	2N5305	Sig, NPN, Si			CR
151-0282-00	A	2N5179	Sig, NPN, Si	Line 16	6-8 & 13	CR
151-0283-00	N	2N918	Sig, NPN, Si	Line 10	6-8 & 13	CR
151-0284-00	X	2N1637	PNP, GE		6-19	CS
151-0285-00	A	2N5160	Sig, PNP, Si	Line 21	6-8 & 15	CR
151-0285-01	N	Selected	Sig, PNP		8-8	CR
151-0285-02	N	Selected	Sig, PNP, Si			PP
151-0286-00	A	2SC515A	Pwr, NPN, Si		6-22	LR
151-0287-00	X	2N4854	NPN, Si			NP
151-0288-00	A	A210	Sig, NPN, Si	Line 12	6-5 & 13	CR
151-0289-00	A	2N3251	Sig, PNP, Si	Line 37	6-3 & 15	CR
151-0290-00	A	2N4895	Sig, NPN, Si	Line 3	6-3 & 12	CR
151-0291-00	A	2N3773	Pwr, NPN, Si	16.	6-21	CR
151-0292-00	A	A5T5058	Sig, NPN, Si	Line 5	6-6 & 12	CR
151-0292-01	N	Selected	Sig, NPN, Si			NP
151-0292-02		A5T5058	Checked			DL
151-0293-00	N	MMT3960A	Sig, NPN, Si	Line 25	6-5 & 13	CR
151-0293-01	N	Selected	Sig, NPN		8-8	CR
151-0294-00	N	2N4261	Sig, PNP, Si	Line 17	6-7 & 15	CR

§§ FOR STATUS CODES, SEE PAGE 9-15.

** FOR NEW DESIGN CODES, SEE PAGE 9-26.

TRANSISTOR CROSS REFERENCE INDEX (CONT)

TEK PART NUMBER TO VENDOR NUMBER

PART NUMBER	** ND	JEDEC OR VENDOR NUMBER	TYPE (CATALOG SECTION)	INDEX CHAR.	PAGE NO.	§§ ST
151-0294-01	N	Selected	Sig, PNP, Si		8-9	CR
151-0295-00	A	V327	Sig, NPN, Si	Line 6	6-7 & 13	CS
151-0296-00	A	MM4049	Sig, PNP, Si	Line 22	6-7 & 15	CR
151-0297-00	A	SE7057	Sig, NPN, Si	Line 6	6-6 & 12	CR
151-0297-01	A	Selected	Sig, NPN, Si			CR
151-0298-00	N	2N5841	Sig, NPN, Si	Line 4	6-7 & 13	CR
151-0299-00	X	2N5956	PNP, Si		6-22	OB
151-0300-00	N	A485	Sig, NPN, Si	Line 14	6-5 & 13	CS
151-0301-00	A	2N2907A	Sig, PNP, Si	Line 31	6-3 & 15	CR
151-0301-01	N	Selected	Sig, PNP, Si		8-9	CR
151-0301-02	N	Selected	Sig, PNP, Si			CR
151-0302-00	N	2N2222A	Sig, NPN, Si	Line 16	6-3 & 12	CR
151-0302-01	N	Selected	Sig, NPN, Si		8-9	CR
151-0302-02		2N2222A	NPN, Si			IN
151-0302-03		ST899				PP
151-0303-00	X	2BFW030	FET, N-Chan			CS
151-0304-00	X	2SC318A	NPN, Si			CS
151-0304-01	N	Checked	Sig, NPN, Si			CS
151-0305-00	X	2SA527	PNP, Si			NP
151-0306-00		2SA756	PNP, Si			SC
151-0307-00	A	2N2907	Sig, PNP, Si	Line 18	6-10 & 16	CR
151-0308-00	A	2N2484	Sig, NPN, Dual	Line 3	6-10 & 14	CR
151-0309-00	A	2N2222	Sig, NPN, Dual	Line 7	6-10 & 14	CR
151-0309-01	N	Selected	Sig, NPN, Si			CR
151-0310-00		2N2218	NPN, Si			TC
151-0310-01		E1530LL	NPN, Si			TC
151-0310-02	X		Sig, NPN		6-19	DL
151-0311-00	X	MJE340	Pwr, NPN, Si		6-22	TC
151-0311-01	A	MJE340	Pwr, NPN, Si	.5	6-20	CR
151-0311-02	N	Selected	Pwr, NPN, Si			CR
151-0312-00		2N4898	Pwr, PNP, Si		6-22	DL
151-0313-00		FPT5122	Phototransistor		14-2	CR
151-0313-01		FPT5122	Phototransistor		14-2	CR
151-0314-00	N	DTS402	Pwr, NPN, Si	3.5	6-20	CS
151-0315-00	A	2N5239	Pwr, NPN, Si	5.	6-20	CR
151-0316-00	A	2N3584	Pwr, NPN, Si	2.	6-20	CR
151-0316-01	N	Selected	Pwr, NPN, Si			CR
151-0317-00		BC109C	NPN, Si			TC
151-0317-01		BC109C	NPN, Si			TC
151-0318-00		BFY51	NPN, Si			TC
151-0319-00	A	1723-0610	Pwr, NPN, Si	40.	6-21	CR
151-0320-00	X	MPS6518	PNP, Si		6-19	CS
151-0320-01		MPS6518	PNP, Si			TC
151-0320-02		BFX48	PNP, Si			TC
151-0321-00	X		NPN, Si, Dual		6-19	DL
151-0322-00	X	2N4890	PNP, Si		6-19	CR
151-0323-00	A	MJE521	Pwr, NPN, Si	4.	6-20	CR
151-0323-01	X	Selected	Pwr, NPN, Si			DL
151-0323-02	N	Selected	Pwr, NPN, Si			PP
151-0324-00	A	MJE371	Pwr, PNP, Si	4.	6-20	CR
151-0324-01	A	Screened	Pwr, PNP, Si			CR
151-0324-02	N	MJE371	Pwr, PNP, Si, Sel			PP
151-0325-00	N	PN4258	Sig, PNP, Si	Line 12	6-2 & 15	CR
151-0325-01	N	Selected	Sig, PNP, Si			CR
151-0325-02						MP
151-0326-00		BC107	NPN, Si			TC
151-0326-01		BC107	NPN, Si			TC
151-0327-00	A	PN4258	Sig, PNP, Si	Line 13	6-2 & 15	
151-0328-00	X	GET2925	NPN, Si		6-19	DL
151-0329-00	A	A210	Sig, NPN, Si	Line 8	6-5 & 13	CS
151-0330-00	A	2N5652	Sig, NPN, Si	Line 5	6-7 & 13	CR
151-0331-00	A	D40C5	Pwr, NPN, Si	.5	6-20	CR
151-0332-00		2N4899	PNP, Si			TC
151-0333-00	A	MPS918	Sig, NPN, Si	Line 8	6-8 & 13	CR
151-0333-01	N	Selected	Sig, NPN, Si		8-10	CR
151-0334-00	A	MJE520	Pwr, NPN, Si	3.	6-20	CR
151-0334-01	N	Selected	Pwr, NPN, Si			CR
151-0335-00	A	MJE370	Pwr, PNP, Si	3.	6-20	CR
151-0335-01	X	Selected	Pwr, PNP, Si			DL
151-0336-00	A	2N3055H	Pwr, NPN, Si	15.	6-21	CR
151-0337-00	A	2N3055H	Pwr, NPN, Si	15.	6-21	CR
151-0337-01	N	Selected	Pwr, NPN, Si			CR
151-0338-00	X	SES1562	NPN, Si		6-19	CS
151-0339-00	X	Selected	NPN, Si			NP
151-0340-00	X	SM8183	NPN, Si			DL
151-0341-00	A	2N3565	Sig, NPN, Si	Line 1	6-4 & 12	CR
151-0342-00	A	2N5086	Sig, PNP, Si	Line 12	7-4 & 15	CR
151-0342-01	N	Selected	Sig, PNP, Si		8-10	CR
151-0343-00		BF259	NPN, Si			TC
151-0344-00	X	SMCM321	Sig, NPN, Si		6-19	LR
151-0344-01			NPN, Si			DL
151-0344-02	X	Selected	Sig, NPN, Si			CR
151-0344-03	X	SMCM321	Sig, NPN, Si			MP
151-0345-00	X	SMT1501	PNP, Si		6-19	NP
151-0346-00		MJ12002	Pwr, NPN, Si	2.5	6-20	CR
151-0346-01	N	Selected	Pwr, NPN, Si			CR
151-0347-00	A	2N5551	Sig, NPN, Si	Line 12	6-6 & 12	CR
151-0347-01	N	Selected	Sig, NPN, Si		8-10	CR
151-0347-02		2N5551	Sig, NPN, Si	Line 13	6-6 & 12	PP
151-0348-00	A	S2002	Sig, NPN, Si		6-19	DL
151-0349-00	A	MJE2801	Pwr, NPN, Si	10.	6-20	CR
151-0349-01	X	MJE2801	Pwr, NPN, Si			DL
151-0349-02	A	Checked	Pwr, NPN, Si			CR
151-0349-03	X	MJE2801	Pwr, NPN, Si			DL
151-0349-04	N	Selected	Pwr, NPN, Si			CR
151-0349-05	N	Selected	Pwr, NPN, Si		8-11	CR
151-0350-00	A	2N5401	Sig, PNP, Si	Line 25	6-6 & 15	CR
151-0350-01	N	Selected	Sig, PNP, Si		8-11	CR
151-0350-02	N	Selected	Sig, PNP, Si			CR
151-0350-03		2N5401	Sig, PNP, Si	Line 26	6-6 & 15	PP
151-0351-00	X	KDC5521	NPN, Si		6-19	DL
151-0352-00	A	D44C6	Pwr, NPN, Si	4.	6-20	CR
151-0352-01	N	Selected	Pwr, NPN, Si			CR
151-0353-00	A	IT121	Sig, NPN, Dual	Line 2	6-10 & 14	CR
151-0354-00	A	ITS1200	Sig, PNP, Dual	Line 17	6-10 & 16	CR
151-0354-01	N	Selected	Sig, PNP, Si			CR
151-0355-00	A	2SC642A	Pwr, NPN, Si		6-22	CR
151-0356-00		2SD291	NPN, Si			CS
151-0357-00		2N48888				DL
151-0358-00	A	D44R4	Pwr, NPN, Si	2.	6-20	CR
151-0358-01	N	Selected	Pwr, NPN, Si			CR
151-0358-02	X	Selected	Pwr, NPN, Si		8-11	CR
151-0359-00		MPSU10	NPN, Si			TC
151-0360-00		BF297	NPN, Si			CS
151-0361-00	A	TD702	NPN/PNP, Si	Line 21	6-10 & 14	CR
151-0362-00	N	MM4049	Sig, PNP, Si	Line 21	6-7 & 15	CR
151-0362-01	N	Selected	Sig, PNP, Si		8-11	CR
151-0363-00		2N6101	Pwr, NPN, Si		8-22	DL
151-0364-00	A	D43C8	Pwr, PNP, Si	3.	6-20	CR
151-0364-01	N	D43C8	Pwr, PNP			CR
151-0365-00	A	D42C9	Pwr, NPN, Si	3.	6-20	CR
151-0366-00	A	D45C Fmly	Pwr, PNP, Si	4.	6-20	CR
151-0367-00	A	A5T3571	Sig, NPN, Si	Line 9	6-5 & 13	CR
151-0367-01	N	SKA6516	Sig, NPN			CR
151-0367-02	N	SKA6516	Sig, NPN			DL
151-0368-00	A	2N6308	Pwr, NPN, Si	5.	6-20	CR
151-0368-01	N	Ckd & Mtchd	Pwr, NPN, Si		8-21	CR
151-0368-02		2N6308				CS
151-0369-00	A	AST4260	Sig, PNP, Si	Line 29	6-5 & 15	CR
151-0369-01						DL
151-0369-02	N	Selected	Pwr, PNP, Si			CR
151-0369-03		AST4260	Sig, PNP, Si	Line 30	6-5 & 15	PP
151-0370-00		TIP34	Pwr, PNP, Si		6-22	OB
151-0371-00			NPN, Si			TC
151-0372-00		2N5401	PNP, Si			TC
151-0373-00	A	MJE2901	Pwr, PNP, Si	10.	6-20	CR
151-0373-01	N	Ckd & Mtchd	Pwr, PNP		8-20	CR
151-0374-00	N	2SD316	NPN, Si			CS
151-0375-00	A	2SC403C	NPN, Si			CS
151-0376-00		2SC402C	NPN, Si			SC
151-0379-00	A	MM4049	Sig, PNP, Si	Line 23	6-7 & 15	CR
151-0379-01		SMCS1056PK	PNP, Si			CR
151-0379-02	N	SMCS2850	Sig, PNP, Si			PP
151-0380-00	A	MMT3960	Sig, NPN, Si	Line 2	6-7 & 13	CR
151-0380-01		MMT3960A	NPN, Si			CR
151-0381-00	X	2N2605	Sig, PNP, Si		6-19	OB
151-0382-00	X	2N3013	Sig, NPN, Si		6-19	OB
151-0383-00	X	2N3251N	Sig, PNP, Si		6-19	OB
151-0384-00	X	2N3569	Sig, NPN, Si		6-19	OB
151-0385-00	N	2N5416	Sig, PNP, Si	Line 18	6-6 & 15	CR

TRANSISTOR CROSS REFERENCE INDEX (CONT)

TEK PART NUMBER TO VENDOR NUMBER

PART NUMBER	** ND	JEDEC OR VENDOR NUMBER	TYPE (CATALOG SECTION)	INDEX CHAR.	PAGE NO.	§§ ST
151-0386-00	X	TIP33	Pwr, NPN, Si		6-22	OB
151-0387-00	X	TIP30	Pwr, PNP, Si		6-22	OB
151-0388-00	X	SS2516	Sig, PNP, Si		6-19	OB
151-0389-00	A	2N4890S	Sig, PNP, Si	Line 26	6-3 & 15	CR
151-0390-00	A	MPSU45	Pwr, NPN, Si	2.	6-20	CR
151-0390-01	N	Selected	Pwr, NPN, Si			CR
151-0391-00	A	MPSU95	Pwr, PNP, Si	2.	6-20	CR
151-0391-01	N	Selected	Pwr, PNP, Si			PP
151-0392-00	X	SE4002	Sig, NPN, Si		6-19	OB
151-0393-00	X	2N3640	Sig, NPN, Si		6-19	NP
151-0394-00	X	TIP33A	Pwr, NPN, Si		6-22	OB
151-0395-00	X	2N5139	Sig, PNP, Si		6-19	OB
151-0396-00	X	2N4916	Sig, PNP, Si		6-19	OB
151-0397-00	X	2N3638	Sig, PNP, Si		6-19	OB
151-0398-00	X	2N3829	Sig, PNP, Si		6-19	OB
151-0399-00	X	TIP29	Pwr, NPN, Si		6-22	OB
151-0400-00		2N5191	NPN, Si			TC
151-0401-00		BC263C	PNP, Si			TC
151-0402-00	A	A5T3571	Sig, NPN, Si	Line 10	6-5 & 13	CR
151-0402-01	X	3571TP	Pwr, NPN, Si			DL
151-0403-00		2SC1012A	NPN, Si			SC
151-0404-00			PNP, Si			TC
151-0405-00	A	MJE800	Pwr, NPN, Si	4.	6-20	CR
151-0405-01						DL
151-0405-02	N	Selected	Pwr, NPN, Si			CR
151-0405-03	A	Selected	Pwr, NPN, Si		8-11	CR
151-0405-04	N	Selected	Pwr, NPN, Si		8-11	CR
151-0406-00	A	2N5401	Sig, PNP, Si	Line 24	6-6 & 15	CR
151-0406-01	N	Selected	Sig, PNP, Si			CR
151-0406-02	N	Selected	Sig, PNP, Si		8-12	CR
151-0407-00	A	2N3923	Sig, NPN, Si	Line 10	6-6 & 12	CR
151-0407-01	N	Selected	Sig, NPN, Si		8-12	CR
151-0407-02	N	Selected	Sig, NPN, Si			CR
151-0408-00	X	D-075A	Sig, NPN, Si		6-19	NP
151-0409-00	X	D-078B	Sig, NPN, Si		6-19	NP
151-0410-00	N	2N5087	Sig, PNP, Si	Line 20	6-4 & 15	CR
151-0410-01	N	Selected	Sig, PNP, Si		8-12	CR
151-0411-00	A	2N5109	Sig, NPN, Si	Line 11	6-5 & 13	CR
151-0411-01	N	Selected	Sig, NPN, Si			CR
151-0412-00		BF257	NPN, Si			IN
151-0413-00	A	2N6258	Pwr, NPN, Si	30.	6-21	CR
151-0414-00	A	MJE1092	Pwr, PNP, Si	5.	6-20	CR
151-0415-00	A	MJE1102	Pwr, NPN, Si	5.	6-20	CR
151-0416-00	A	D-103	Sig, NPN, Si		6-19	NP
151-0417-00	N	S21766	Sig, PNP, Si		6-19	LS
151-0418-00						DL
151-0419-00	A	2N6227	Pwr, PNP, Si	6.	6-20	CR
151-0420-00						NP
151-0421-00		2TX320	NPN, Si			TC
151-0422-00		MD2369B	NPN, Si			TC
151-0423-00	A	TIP50	Pwr, NPN, Si	1.	6-20	CR
151-0423-01	N	Selected	Pwr, NPN, Si		8-12	CR
151-0423-02	N	2SC233K/L				CR
151-0424-00	A	2N5769	Sig, NPN, Si	Line 3	6-2 & 12	CR
151-0424-01	X	2N5769	Sig, NPN, Si			NP
151-0424-02	N	2N5769	Sig, NPN, Si			CR
151-0424-03	N	Selected	Sig, NPN, Si		8-13	CR
151-0424-04		2N5769	Sig, NPN, Si	Line 4	6-2 & 12	PP
151-0425-00	A	MJE1101	Pwr, NPN, Si	5.	6-20	CR
151-0426-00	A	D44H11	Pwr, NPN, Si	10.	6-21	CR
151-0426-01	A	Selected	Pwr, NPN, Si	10.	6-21	CR
151-0426-02	X	Ckd & mtchd	Pwr, NPN			NP
151-0427-00	A	2N3563	Sig, NPN, Si	Line 19	6-8 & 13	CR
151-0427-01	N	Selected	Sig, NPN, Si		8-13	CR
151-0428-00		0-058C	NPN, Si			NP
151-0429-00	A	MJE700	Pwr, PNP, Si	4.	6-20	CR
151-0429-01						CR
151-0430-00	X	D-102	Sig, NPN, Si		6-19	NP
151-0431-00	X	SKA1103	Sig, NPN, Si		6-19	NP
151-0432-00	A	2N3565	Sig, NPN, Si	Line 2	6-4 & 12	CR
151-0432-01		2N3565	Sig, NPN, Si	Line 3	6-4 & 12	PP
151-0433-00	X	2N3055	Pwr, NPN, Si		6-22	CR
151-0434-00	A	2N4261	Sig, PNP, Si	Line 19	6-7 & 15	CR
151-0434-01	N	Selected	Sig, PNP, Si		8-13	CR
151-0434-02	N	Selected	Sig, PNP, Si			CR
151-0435-00	A	MPSA65	Sig, PNP, Si	Line 6	6-9 & 15	CR
151-0435-01	N	MP5AL5	Sig, PNP, Si			PP
151-0436-00	A	MJE2801	Pwr, NPN, Si	10.	6-21	CR
151-0437-00	N	2N5769	Sig, NPN, Si	Line 5	6-2 & 12	CR
151-0438-00	N	MPSH81	Sig, PNP, Si	Line 24	6-8 & 15	CR
151-0438-01	N	Selected	Sig, PNP, Si			CR
151-0439-00	A	D40E7	Pwr, NPN, Si	2.	6-20	CR
151-0439-01	X	Selected	Pwr, NPN, Si			NP
151-0440-00	A	D41E	Pwr, PNP, Si	1.	6-20	CR
151-0441-00	A	2N2857	Sig, NPN, Si	Line 3	6-5 & 13	CR
151-0441-01	N	2N5179	Sig, NPN, Si			CS
151-0441-02	X	2N5179	Sig, NPN, Si			DL
151-0441-03	N	Selected	Sig, NPN, Si		8-13	CR
151-0441-04						MP
151-0442-00	A	2N6304 Fmly	Sig, NPN, Si	Line 15	6-5 & 13	CR
151-0442-01	N	2N6304	Sig, NPN, Si			CS
151-0443-00	A	MPSA92	Sig, PNP, Si	Line 22	6-6 & 15	CR
151-0443-01	X	MPSA92 Fmly	Sig, PNP, Si			DL
151-0443-02	N	Selected	Sig, PNP, Si		8-14	CR
151-0443-03		MPSA92	Sig, PNP, Si	Line 23	6-6 & 15	PP
151-0444-00	A	MPSA42	Sig, NPN, Si	Line 8	6-6 & 12	CR
151-0444-01	N	Selected	Sig, NPN, Si		8-14	CR
151-0444-02	N	SPS797-2	Sig, NPN, Si			CR
151-0444-03	N	Selected	Sig, NPN, Si		8-14	CR
151-0445-00		2TX214	NPN, Si			TC
151-0446-00	A	2N3866	Sig, NPN, Si	Line 2	6-8 & 12	CR
151-0447-00	N	2N5841	Sig, NPN, Si	Line 3	6-7 & 13	CR
151-0448-00	A	2N5836 Fmly	Sig, NPN, Si	Line 22	6-5 & 13	CR
151-0449-00	A	BU208A	Pwr, NPN, Si	5.	6-20	CR
151-0449-01	X	Selected	Pwr, NPN, Si			CS
151-0450-00	A	2N5583	Sig, PNP, Si	Line 28	6-5 & 15	CR
151-0450-01	N	Selected	Sig, PNP, Si		8-15	CR
151-0450-02	N	2N5583	Sig, PNP, Si			CR
151-0451-00	A	2N5943	Sig, NPN, Si	Line 12	6-8 & 13	CR
151-0451-01	N	Selected	Sig, NPN, Si		8-15	CR
151-0451-02	N	2N5943	Sig, NPN, Si			CR
151-0452-00	X	SE5036	Sig, NPN, Si		6-19	LR
151-0453-00	A	2N5086	Sig, PNP, Si	Line 16	6-4 & 15	CR
151-0453-01		2N5086	Sig, PNP, Si	Line 18	6-4 & 15	PP
151-0454-00	A	DTS1010	Pwr, NPN, Si	10.	6-20	CR
151-0455-00		2N5962 Fmly	PNP, Si			SC
151-0456-00	A	2N5962	Sig, NPN, Si	Line 7	6-4 & 12	CR
151-0457-00	A	2N2369	Sig, NPN, Si	Line 7	6-2 & 12	CR
151-0457-01		S39649				PP
151-0458-00	A	PN4258	Sig, PNP, Si	Line 14	6-2 & 15	CR
151-0459-00	A	F2N3251	Sig, PNP, Si	Line 36	6-3 & 15	CR
151-0459-01	N	Selected	Sig, PNP, Si			CR
151-0460-00	N	2N3947	Sig, NPN, Si	Line 10	6-3 & 12	CR
151-0461-00	A	2N3959	Sig, NPN, Dual	Line 9	6-10 & 14	CR
151-0461-01	N	Selected	Sig, NPN, Si		8-15	CR
151-0462-00	A	TIP30C	Pwr, PNP, Si	1.	6-20	CR
115-0462-01	N	Selected	Pwr, PNP, Si			OT
151-0463-00	A	D41E7	Pwr, PNP, Si		6-20	CR
151-0464-00	A	TIP29C	Pwr, NPN, Si	1.	6-20	CR
151-0465-00	A	MJE234	Pwr, PNP, Si	4.	6-20	CR
151-0466-00	A	MJE224	Pwr, NPN, Si	4.	6-20	CR
151-0467-00	A	2N4258	Sig, PNP, Dual	Line 19	6-10 & 16	CR
151-0468-00	A	DTS721	Pwr, NPN, Si	3.	6-20	CR
151-0469-00	A	MJE1661	Pwr, NPN, Si	15.	6-21	CR
151-0470-00	X	MJE3771	Pwr, NPN, Si		6-22	CR
151-0471-00	A	2N5770	Sig, NPN, Si	Line 18	6-8 & 13	CR
151-0471-01	N	2N5770	Sig, NPN, Si			CR
151-0472-00	A	NE41632	Sig, NPN, Si	Line 6	6-5 & 13	CR
151-0472-01	N	Selected	Sig, NPN, Si			NP
151-0472-02	N	NE41632BD	Sig, NPN, Si			CR
151-0473-00	A	D44C9	Pwr, NPN, Si	4.	6-20	CR
151-0474-00	A	2N5947	Pwr, NPN, Si		6-19	NP
151-0474-01	A	MFR511	Sig, NPN, Si	Line 24	6-5 & 13	CR
151-0475-00	A	BFR91	Sig, NPN, Si	Line 12	6-7 & 13	CR
151-0475-01	N	Selected	Sig, NPN, Si		8-15	CR
151-0476-00	A	TIP31C	Pwr, NPN, Si	3.	6-20	CR
151-0476-01	N	TIP31C	Pwr, NPN, Si			CR
151-0476-02	A	TIP31C	Pwr, NPN, Si			CR
151-0477-00	A	TIP35A	Pwr, NPN, Si	25.	6-21	CR
151-0477-01	N	Selected	Pwr, NPN, Si		8-16	CR

§§ FOR STATUS CODES, SEE PAGE 9-15.

** FOR NEW DESIGN CODES, SEE PAGE 9-26.

TRANSISTOR CROSS REFERENCE INDEX (CONT)

TEK PART NUMBER TO VENDOR NUMBER

PART NUMBER	** ND	JEDEC OR VENDOR NUMBER	TYPE (CATALOG SECTION)	INDEX CHAR.	PAGE NO.	§§ ST
151-0478-00	A	TIP31A	Pwr, NPN, Si	3.	6-20	CR
151-0478-01	N	Selected	Pwr, NPN, Si		8-16	CR
151-0479-00		BDX36	NPN, Si			TC
151-0479-01		BDX36	NPN, Si			TC
151-0480-00		2SC1173	NPN, Si			TC
151-0481-00		MPS6517	PNP, Si			TC
151-0482-00	A	TIP32C	Pwr, PNP, Si	3.	6-20	CR
151-0482-01	N	TIP32	Pwr, PNP, Si			CR
151-0483-00	X	MPS3731	Pwr, PNP, GE		6-22	CS
151-0484-00	A	2N5962	Sig, NPN, Si	Line 8	6-4 & 12	CR
151-0485-00	A	2N5758	Pwr, NPN, Si	6.	6-20	CR
151-0486-00		2TX326	NPN, Si			TC
151-0487-00	A	SENT139	Pwr, NPN, Si	15.	6-21	CR
151-0488-00		LPT100B				DL
151-0489-00		2SC1630	NPN, Si			SC
151-0490-00		FRB750	NPN, Si			TC
151-0491-00	A	SJ4208	Pwr, NPN, Si	15.	6-21	CR
151-0492-00		BC202C	NPN, Si			DL
151-0493-00		2N4122	NPN, Si			NP
151-0494-00	A	CD2357	Sig, NPN, Si	Line 23	6-5 & 13	CR
151-0494-01	N	CD2357, Ckd	Sig, NPN, Si			CR
151-0495-00	A	MJ2500	Pwr, PNP, Si	10.	6-20	CS
151-0496-00	A	D40K2	Pwr, NPN, Si	1.5	6-20	CR
151-0497-00	A	TIP47	Pwr, NPN, Si	1.	6-20	CR
151-0497-01	N	Selected	Pwr, NPN, Si		8-16	CR
151-0498-00	A	2NC3866	Sig, NPN, Si	Line 3	6-8 & 12	CR
151-0498-01	N	Checked	Sig, NPN, Si			CR
151-0499-00		2SC1124	NPN, Si			SC
151-0500-00	X	C220	Scr			OB
151-0501-00	X	355	Scr			DL
151-0502-00	X	356	Scr			DL
151-0503-00	A	2N5060	Scr	.8	8-1	CR
151-0504-00	A	2N4851	Unijunction	35.	8-1	CR
151-0504-01		2N4851	Unijunction	35.	8-1	OT
151-0505-00	A	2N3228	Scr	5.	8-1	CR
151-0506-00	A	C106B2X283	Scr	2.7	8-1	CR
151-0507-00	A	2N3669	Scr	12.5	8-1	CR
151-0507-01	N	Checked	Scr			NP
151-0508-00	A	2N6027	Programmable	40.	8-1	CR
151-0508-01	N	Selected	Programmable	40.	8-1 & 16	CR
151-0509-00	X	RTD0440	Scr			NP
151-0510-00	A	2N4852	Unijunction	35.	8-1	CR
151-0511-00	A	2N4103	Scr	12.5	8-1	CR
151-0512-00	N	685343	Scr	63.	8-1	CR
151-0513-00	A	2N4853	Unijunction	35.	8-1	CR
151-0514-00	A	2N3528	Scr			CR
151-0514-01	N	Preconditioned	Scr			CR
151-0515-00		2N4441	Scr			OB
151-0515-01	A	2N4441	Scr	8.	8-1	CR
151-0515-02			Scr			DL
151-0516-00		2N6027	Unijunction			NP
151-0517-00	X	3N83	Scr			DL
151-0518-00			Scr			DL
151-0519-00	N	2N5063	Scr	.8	8-1	CR
151-0520-00	X	MCR4C6-4	Scr			OB
151-0521-00	A	C122B1X70	Scr	8.	8-1	CR
151-0521-01	A	C122B	Scr	8.	8-1	CR
151-0522-00	A	SC141DX164	Triac	6.	8-1	CR
151-0523-00	N	MAC2-2	Triac			DL
151-0524-00	N	C137PBX152	Scr	35.	8-1	PP
151-0525-00		625MW	NPN, Si			TC
151-0526-00	A	2N3896	Scr	35.	8-1	CR
151-0527-00	A	2N6241	Scr	4.	8-1	CR
151-0528-00	A	2N6400	Scr	16.	8-1	CR
151-0529-00	A	CB203	Scr	.5	8-1	CR
151-0530-00	N	MCR106-4	Scr			CS
151-0531-00						NP
151-0532-00	A	MAC2-2	Triac	6.	8-1	CR
151-0533-00	N	MCR649P1	Scr			CS
151-0534-00	N	S0508LS3	Scr			CS
151-0535-00	N	U2TA508	Scr			DL
151-0536-00		50303LS3				CR
151-0537-00	A	SC146DX176	Triac	10.	8-1	CR
151-0538-00		T2800M	Triac	8.	8-1	CR
151-0539-00		SC92D	Triac	8.	8-1	CR
151-0540-00		SC26IDX24	Triac	25.	8-1	CR
151-0541-00		03P5MG	Si			SC
151-0600-00	N	2SA706				CS
151-0601-00						SC
151-0602-00		258	NPN			TC
151-0603-00	A	2N5039	Pwr, NPN, Si	20.	6-21	CR
151-0604-00	A	2N3725	Sig, NPN, Si	Line 17	6-3 & 12	CR
151-0605-00	X	SMX-5032	NPN, Si		6-19	DL
151-0606-00	A	TIP142	Pwr, NPN, Si	10.	6-21	CR
151-0606-01			NPN, Si			DL
151-0607-00	A	TIP147	Pwr, PNP, Si	10.	6-21	CR
151-0608-00	A	NE64535	Sig, NPN, Si	Line 13	6-7 & 13	CR
151-0608-01			NPN, Si			CR
151-0609-00	A	NE21935	Sig, NPN, Si	Line 14	6-7 & 13	CR
151-0609-01			PNP, Si			CR
151-0610-00			NPN, Si			TC
151-0611-00		2SC1674	NPN, Si			SC
151-0612-00	A	MDS60	Pwr, PNP, Si	.5	6-20	CR
151-0612-01	N	Selected	Pwr, NPN, Si		8-16	CR
151-0613-00	A	MJE340	Pwr, NPN, Si	.5	6-20	CR
151-0614-00		D156	Pwr, NPN, Si			CR
151-0615-00	A	2N6558	Pwr, NPN, Si	.5	6-20	CR
151-0615-01	N	Selected	Pwr, NPN, Si		8-17	CR
151-0616-00	A	TIP36A	Pwr, PNP, Si	25.	6-21	CR
151-0617-00	A	2N6256	Pwr, NPN, Si	Line 9	6-8 & 13	CR
151-0618-00			Si			TC
151-0619-00	A	LM394	Sig, NPN, Dual	Line 12	6-10 & 14	CR
151-0620-00	X	D180	Pwr, NPN, Si		6-22	NP
151-0621-00	A	D44H3	Pwr, NPN, Si	10.	6-20	CR
151-0621-01	A	Selected	Pwr, NPN, Si		8-17	CR
151-0622-00	A	92PU51A	Sig, PNP, Si	Line 22	6-3 & 15	CR
151-0623-00	A	TIP52	Pwr, NPN, Si	3.	6-20	CR
151-0624-00	N	2N5551	Sig, NPN, Si	Line 14	6-6 & 12	CR
151-0625-00	A	D45H11	Pwr, PNP, Si	10.	6-21	CR
151-0625-01	N	Selected	Pwr, PNP		8-17	CR
151-0625-02	A	X45H495				CR
151-0626-00	A	NE02107E	Sig, NPN, Si		6-19	NP
151-0626-01			PNP, Si			NP
151-0627-00	X	D186	Sig, NPN, Si			NP
151-0627-01	X	Modified	Sig, NPN, Si			NP
151-0628-00		FPT1674	Phototransistor		14-2	CR
151-0629-00		FPT110	Phototransistor		14-2	CR
151-0630-00	A	NE02135	Sig, NPN, Si	Line 11	6-7 & 13	CR
151-0631-00	A	NE73435	Sig, NPN, Si	Line 21	6-5 & 13	CR
151-0632-00	A	MJE13007	Pwr, NPN, Si	8.	6-20	CR
151-0632-01	N	MJE13007, Ckd	NPN, Si			CR
151-0632-02		2SC2502	NPN, Si			SC
151-0632-03	X	MJE13007	Pwr, NPN, Si			NP
151-0633-00	A	2N3716	Pwr, NPN, Si	10.	6-21	CR
151-0634-00	A	MJE13003	Pwr, NPN, Si	1.5	6-20	CR
151-0634-01	A	Selected	Pwr, NPN		8-17	PP
151-0636-00	A	BFR92	Sig, NPN, Si	Line 8	6-7 & 13	CR
151-0637-00	A	MPSH05	Sig, NPN, Si	Line 21	6-3 & 12	CS
151-0638-00	X	2N3854A	Sig, NPN, Si		6-19	CS
151-0639-00	A	2N5088	Sig, NPN, Si	Line 4	6-4 & 12	CS
151-0640-00	A	MPSH55	Sig, PNP, Si	Line 39	6-3 & 15	CS
151-0641-00	A	MPS3702	Sig, PNP, Si	Line 27	6-3 & 15	CS
151-0642-00		2SA896	PNP, Si			SC
151-0643-00		2SC1811	NPN, Si			SC
151-0644-00	A	2N3791	Pwr, PNP, Si	10.	6-20	CS
151-0645-00	A	MPSA06	Sig, NPN, Si	Line 6	6-3 & 12	CR
151-0646-00	A	MPSA55	Sig, PNP, Si	Line 28	6-3 & 15	CS
151-0647-00	A	FT4178	Pwr, PNP, Si	4.	6-20	CR
151-0648-00		FPT102A	Phototransistor		14-2	CR
151-0649-00	A	2NC2369	Sig, NPN, Si	Line 6	6-2 & 12	OT
151-0649-01	N	2NC2369	Sig, NPN			OT
151-0650-00	A	2SC1252	Sig, NPN, Si	Line 18	6-5 & 13	CR
151-0651-00	A	TIP36C	Pwr, PNP, Si	25.	6-21	CR
151-0652-00	A	TIP35C	Pwr, NPN, Si	25.	6-21	CR
151-0653-00	X	2N6534	Sig, PNP, Si		6-19	DL
151-0654-00	X	P1C1068	Pwr, NPN, Si		6-22	CS
151-0655-00	A	2N3725	Sig, NPN, Si		6-19	CR
151-0656-00	A	2N6044	Pwr, NPN, Si	8.	6-20	CR
151-0657-00	A	2N6041	Pwr, PNP, Si	8.	6-20	CR
151-0658-00	A	NE02103	Sig, NPN, Si	Line 10	6-7 & 13	CR

TRANSISTOR CROSS REFERENCE INDEX (CONT)

TEK PART NUMBER TO VENDOR NUMBER

PART NUMBER	** ND	JEDEC OR VENDOR NUMBER	TYPE (CATALOG SECTION)	INDEX CHAR.	PAGE NO.	§§ ST
151-0659-00		D180	NPN, Si			CR
151-0660-00	A	TIP33C	Pwr, NPN, Si	10.	6-21	OT
151-0661-00	N	NE7400	Sig, NPN, Si	Line 27	6-5 & 13	CR
151-0662-00	N	2N5179	Sig, NPN, Si			DL
151-0663-00	A	MMBTH81	Sig, PNP, Si	Line 22	6-8 & 15	CR
151-0664-00	X	MPS3640 Fmly	Sig, PNP, Si		6-19	DL
151-0665-00		2SA733	PNP, Si			SC
151-0666-00		2SA636	PNP, Si			SC
151-0667-00		2SC1762-1	NPN, Si			SC
151-0668-00		2SC1811-22	NPN, Si			SC
151-0669-00		2SC1816-03	NPN, Si			SC
151-0670-00		2SA884	PNP, Si, Dual			SC
151-0671-00		2SC1983	Pwr, NPN, Si	3.	2-20	CR
151-0672-00		2SA639S	PNP, Si			SC
151-0673-00		2SC1279S	NPN, Si			SC
151-0674-00		FT317A	NPN, Si			DL
151-0675-00		TIP120	NPN, Si			TC
151-0676-00		BF457	NPN, Si			TC
151-0677-00		2SC926A-5	NPN, Si			SC
151-0678-00	A	MJE13005	Pwr, NPN, Si	4.	6-20	CR
151-0678-01	X	MJE13005	Pwr, NPN, Si			CR
151-0679-00	A	MJE13009	Pwr, NPN, Si	12.	6-21	CR
151-0679-01	X	MJE13009	Pwr, NPN, Si			PP
151-0680-00		PN2369	NPN, Si			TC
151-0681-00		BD131	NPN, Si			TC
151-0681-01		BD131	NPN, Si			TC
151-0682-00	N	2N5160	Pwr, NPN, Si		6-19	DL
151-0682-01	N	Checked	Pwr, NPN, Si			DL
151-0683-00	N	2SC403C	NPN, Si			DL
151-0684-00		2SC634A	NPN, Si			SC
151-0685-00	N	2SC1475	NPN, Si			DL
151-0686-00		2SC1474	NPN, Si			SC
151-0687-00	N	2SA772	PNP, Si			DL
151-0688-00		2SA671-C	PNP, Si			SC
151-0689-00	A	NE57835	Sig, NPN, Si	Line 7	6-7 & 13	CR
151-0690-00			NPN, Si			CR
151-0692-00		BD419	NPN, Si			TC
151-0693-00	A	2N6559	Pwr, NPN, Si	.5	6-20	CR
151-0693-01	N	Selected	Pwr, NPN, Si		8-18	CR
151-0694-00	A	MDS60	Pwr, PNP, Si	.5	6-20	CR
151-0694-01	N	Selected	Pwr, PNP, Si		8-18	CR
151-0695-00	A	MRF5175	Sig, NPN, Si	Line 26	6-5 & 13	CR
151-0696-00	A	2SA1006B	Pwr, PNP, Si	1.5	6-20	PP
151-0697-00	A	2SC2336B	Pwr, NPN, Si	1.5	6-20	PP
151-0698-00	A	MJE350	Pwr, PNP, Si	.5	6-20	CR
151-0699-00	A	UTA508	Sig, NPN, Si	Line 1	6-9 & 12	CR
151-0700-00	A	MMBT3906	Sig, PNP, Si	Line 33	6-3 & 15	CR
151-0701-00	A	2SC2527G	Pwr, NPN, Si	10.	6-21	CR
151-0701-01	N	2SC2527G	Pwr, NPN, Si			CR
151-0701-02		2SC2527-B,X	NPN, Si			SC
151-0702-00		2SC1951	NPN, Si			SC
151-0702-01		2SC1904	NPN, Si			SC
151-0703-00	A	2N6587	Pwr, NPN, Si	10.	6-21	CR
151-0704-00	A	2N2369	Sig, NPN, Si	Line 8	6-2 & 12	CR
151-0705-00	X	2N918	NPN, Si		6-19	DL
151-0706-00	A	2N3904	Sig, NPN, Si	Line 11	6-3 & 12	CR
151-0707-00		MJE8S03	Pwr, NPN, Si	5.	6-20	PP
151-0708-00	A	UPTB550	Sig, NPN, Si	Line 1	6-6 & 12	CR
151-0709-00	N	CD3921	Sig, NPN, Si	Line 19	6-5 & 13	CR
151-0709-01						CR
151-0710-00	A	92PU01A	Sig, NPN, Si	Line 2	6-3 & 12	CR
151-0711-00	A	MPSH10	Sig, NPN, Si	Line 14	6-8 & 13	CR
151-0711-01		SPS8608M				PP
151-0711-02		MPSH10	Sig, NPN, Si	Line 15	6-8 & 13	PP
151-0712-00	A	MPHS81	Sig, PNP, Si	Line 24	6-8 & 15	CR
151-0712-01	N	MPSH10	Sig, NPN, Si			CR
151-0712-02		MPSH81	Sig, PNP, Si	Line 25	6-8 & 15	PP
151-0713-00	A	MMBT4260	Sig, PNP, Si	Line 31	6-5 & 15	CR
151-0714-00	A	MMBT5179	Sig, NPN, Si	Line 17	6-8 & 13	CR
151-0715-00	A	BFQ17	Sig, NPN, Si	Line 11	6-8 & 13	CR
151-0716-00	A	92PU45A	Sig, NPN, Si	Line 2	6-9 & 12	PP
151-0717-00		2SC1963	NPN, Si, Dual			SC
151-0718-00		2SA896-22	PNP, Si			SC
151-0719-00	A	MPSH81	Sig, PNP, Si	Line 23	6-8 & 15	CR
151-0720-00	A	MPSH10	Sig, NPN, Si	Line 13	6-8 & 13	CR
151-0721-00		2SA1009	PNP, Si			SC
151-0722-00		2SC1426	NPN, Si			SC
151-0723-00		2SC1733	NPN, Si, Dual			SC
151-0724-00		Tested	PNP, Si			PP
151-0725-00	A	SL360	Sig, NPN, Si	Line 13	6-10 & 14	CR
151-0726-00		2SA1010	PNP, Si			SC
151-0727-00		2SC2334	NPN, Si			SC
151-0728-00	A	2N6591	Pwr, NPN, Si	1.	6-20	CR
151-0729-00	A	D45H485	Pwr, PNP, Si		6-22	DL
151-0730-00	A	MMBTH24	Sig, NPN, Si	Line 19	6-3 & 12	CR
151-0731-00	A	MMBC1321	Sig, NPN, Si	Line 20	6-3 & 12	CR
151-0732-00						PP
151-0733-00						PP
151-0734-00						PP
151-0735-00						PP
151-0736-00	A	2N4401	Sig, NPN, Si	Line 8	6-3 & 12	CR
151-0736-01		2N4401	Sig, NPN, Si	Line 9	6-3 & 12	PP
151-0737-00		2SD549, S/T	NPN, Si			SC
151-0740-00		2SB504	PNP, Si			SC
151-0741-00		2SA840, S/T	NPN, Si			SC
151-0742-00		2SC1670, S/T	NPN, Si			SC
151-0743-00	A	DCC48	Pwr, NPN, Si	4.	6-20	CR
151-0744-00						PP
151-0745-00	A	2SA1077G	Pwr, PNP, Si	10.	6-21	CR
151-0746-00	A	MJ12003	Pwr, NPN, Si		6-22	PP
151-0747-00	A	MJ12004	Pwr, NPN, Si	5.	6-20	CR
151-0748-00			NPN, Si			TC
151-0749-00	A	MPSA92	Sig, PNP, Si	Line 21	6-6 & 15	CR
151-0750-00	A	MPSA42	Sig, NPN, Si	Line 4	6-6 & 12	CR
151-0751-00	A	2N2857	Sig, NPN, Si	Line 1	6-5 & 13	CR
151-0751-01		2NC2857PL	NPN, Si			PP
151-0752-00	A	BFR96	Sig, NPN, Si	Line 9	6-7 & 13	CR
151-0753-00						SC
151-0754-00	A	NE73433	Sig, NPN, Si	Line 20	6-5 & 13	PP
151-0756-00		MRF531	Sig, NPN, Si	Line 1	6-7 & 12	MP
151-0757-00		2SC1988	NPN, Si			SC
151-0758-00						MP
151-0759-00		MJ10011	Pwr, NPN, Si	8.	6-20	MP
151-0760-00		MJ12004	Pwr, NPN, Si	5.	6-20	PP
151-0761-00						PP
151-0762-00						SC
151-0763-00						SC

§§ STATUS CODES

CR	Current Production
§ EN	Engineering
PP	Pre-Production
§ CS	Customer Service
§ NP	Non-Production
§ DL	Deleted
§ OB	Obsolete Instrument
CM	Custom Mod Instrument
§ DS	Digital Systems
§ OT	Obsolescent Instrument
MP	Modified Part
LR	Last Supply Current
LS	Last Supply Customer Service
VN	Vendor
TC	Telequipment Current Production
IN	International
SC	Sony/Tek Current Production

THE STATUS IN THIS CATALOG WAS CORRECT AT THE TIME IT WAS PUBLISHED, BUT IT IS SUBJECT TO CHANGE.

§ TO USE A PART WITH THIS STATUS ON A NEW INSTRUMENT REQUIRES THAT A NEW PURCHASED PART INITIATION FORM (PPIF) BE INITIATED.

(A GLOSSARY OF TERMS FOR THESE STATUS CODES CAN BE FOUND ON PAGE 0-44).

** FOR NEW DESIGN CODES, SEE PAGE 9-26.

TRANSISTOR CROSS REFERENCE INDEX (CONT)

TEK PART NUMBER TO VENDOR NUMBER

PART NUMBER	** ND	JEDEC OR VENDOR NUMBER	TYPE (CATALOG SECTION)	INDEX CHARACTER	PAGE NO.	§§ ST
151-1001-00	X	FN222	FET, N-Channel		7-10	NP
151-1001-01	X	FN222	FET, N-Channel			NP
151-1002-00	N	MFE3001	FET, N-Channel	Line 1	7-2	CR
151-1003-00	N	SU2095	FET, N-Channel		7-10	CS
151-1004-00	A	SN4302	FET, N-Channel	Line 2	7-2	CR
151-1005-00	A	2N4303	FET, N-Channel	Line 3	7-2	CR
151-1005-01	X	Checked	FET, N-Channel			NP
151-1005-02	A	Checked	FET, N-Channel			CR
151-1005-03		2N4303	FET, N-Channel			PP
151-1006-00	A	2N4304	FET, N-Channel	Line 4	7-2	CR
151-1007-00	A	D/2N3684	FET, N-Channel	Gr A, Ln 1	7-6	CR
151-1008-00	A	UC210	FET, N-Channel		7-10	CS
151-1009-00	A	FD1154	FET, N-Channel		7-10	CS
151-1010-00	A	D/2N3822	FET, N-Channel	Gr B, Ln 1	7-6	CR
151-1011-00	A	D/2N3822	FET, N-Channel	Gr B, Ln 2	7-6	CR
151-1011-01	X	FE1167	FET, N-Channel			NP
151-1012-00	A	2N4416	FET, N-Channel	Line 5	7-2	CR
151-1012-01	A	Screened	FET, N-Channel			CR
151-1013-00	A	SBF1370	FET, N-Channel		7-10	CS
151-1014-00	A	2N4220	FET, N-Channel		7-10	CS
151-1015-00	A	2N4303	FET, N-Channel	Line 6	7-2	CR
151-1015-01	X	Selected	FET, N-Channel			DL
151-1015-02	A	Screened	FET, N-Channel			CR
151-1016-00	X	2N4304	FET, N-Channel		7-10	DL
151-1017-00	X	F1333	FET, N-Channel		7-10	NP
151-1017-01	X	MMT3823	FET, N-Channel			CR
151-1018-00		2SK11	FET, N-Channel			SC
151-1019-00	N	SU2235	FET, N-Channel		7-10	CS
151-1020-00	X	FN7428	FET, N-Channel		7-10	NP
151-1021-00	A	2N4391	FET, N-Channel	Line 7	7-2	CR
151-1021-01	X	Checked	FET, N-Channel			NP
151-1021-02	A	Screened	FET, N-Channel			CR
151-1022-00	A	2N4392	FET, N-Channel	Line 8	7-2	CR
151-1022-01	X	Checked	FET, N-Channel			DL
151-1023-00	X	2N4417	FET, N-Channel		7-10	NP
151-1023-01	X	SMCM485	FET, N-Channel			CR
151-1024-00	X	2N4352	FET, P-Channel		7-10	CR
151-1025-00	A	2N4416	FET, N-Channel	Line 9	7-2	CR
151-1025-01	S	Checked	FET, N-Channel			NP
151-1025-02		Selected				NP
151-1026-00	N	2N4304	FET, N-Channel	Line 10	7-2	CR
151-1027-00	A	D/2N4393	FET, N-Channel	Gr C, Ln 1	7-7	CR
151-1027-01	X	DN480A	FET, N-Channel			DL
151-1028-00	N	U1908	FET, N-Channel	Line 11	7-2	CR
151-1029-00	A	D/2N5393	FET, N-Channel	Gr B, Ln 3	7-6	CR
151-1030-00	X	3N138	FET, N-Channel		7-10	CR
151-1031-00	A	DN870	FET, N-Channel	Gr D, Ln 1	7-7	CR
151-1032-00	A	D/2N5397	FET, N-Channel	Gr E, Ln 1	7-8	CR
151-1032-01		DN349	FET, Dual			DL
151-1032-02	A	Prestr & Tstd	FET, N-Channel		8-18	CR
151-1033-00	X	2N6027	FET		7-10	DL
151-1034-00	X	S2010	FET, N-Channel		7-10	NP
151-1034-01	X	S2011	FET, N-Channel			DL
151-1035-00	X	D/2N4416	FET		7-10	DL
151-1036-00	A	D/2N4393	FET, N-Channel	Gr C, Ln 2	7-7	CR
151-1036-01	X	SU2351	FET, N-Channel			DL
151-1036-02		SU2351	FET, N-Channel			TC
151-1037-00	A	D/2N3684	FET, N-Channel	Gr A, Ln 2	7-6	CR
151-1038-00		2SK12	FET			CS
151-1039-00	A	2N5462	FET, P-Channel	Line 1	7-3	CR
151-1039-01	X	Selected	FET, P-Channel			DL
151-1039-02	A	Screened	FET, P-Channel			PP
151-1040-00	X	3N140	FET, N-Channel		7-10	CR
151-1041-00	A	D/2N3822	FET, N-Channel	Gr B, Ln 4	7-6	CR
151-1042-00	A	2N5454	FET, N-Channel	Gr D, Ln 2	7-7	CR
151-1042-01	A	Selected	FET, N-Channel		8-18	CR
151-1042-02	A	Mtchd & Chkd	Fet, N-Channel		8-20	CR
151-1043-00			NPN, Si			CS
151-1044-00	A	2N3955	FET, N-Channel	Gr A, Ln 2	7-10	CS
151-1045-00	A	2N5460	FET, P-Channel	Line 2	7-3	CR
151-1046-00	A	FD1607	FET, N-Channel	Gr C, Ln 3	7-7	CS
151-1047-00	A	FD1623	FET, N-Channel	Gr A, Ln 3	7-6	CR
151-1048-00	N	UC400	FET, P-Channel		7-10	CR
151-1049-00	A	D/2N3822	FET, N-Channel	Gr A, Ln 4	7-6	CR
151-1049-01	A	Checked	FET, N-Chan, Dual			CR
151-1050-00	A	FD1632	FET, N-Channel	Gr B, Ln 5	7-6	CR
151-1051-00		BFW1051	FET, Si			TC
151-1052-00		BFW1051	FET, Si			TC
151-1053-00			FET, Si			TC
151-1054-00	A	2N3958	FET, N-Channel	Gr A, Ln 5	7-6	CR
151-1054-01	A	2N3958	FET, N-Channel			CR
151-1054-02	A	Screened	FET, N-Chan, Dual			CR
151-1055-00	X	3N159	FET, N-Channel		7-10	CR
151-1056-00		E112	FET, N-Channel			CS
151-1057-00	A	D/2N3822	FET, N-Channel	Gr B, Ln 6	7-6	CR
151-1058-00	A	NZD0114C	FET, N-Channel	Gr C, Ln 4	7-7	CR
151-1058-01		NZD0114C	FET, N-Channel			CR
151-1059-00	A	SPF789	FET, N-Channel	Line 12	7-2	CR
151-1060-00	X	FD5018	FET, P-Channel		7-10	DL
151-1061-00	X	E421	FET, N-Channel		7-10	EN
151-1062-00			FET, N-Channel			TC
151-1064-00	A	2N4391	FET, N-Channel	Gr C, Ln 5	7-7	CR
151-1064-01	X	Plated	FET, N-Channel			CR
151-1065-00	X	2N4391/4800	FET, N-Channel		7-10	OB
151-1066-00	A	P1182E	FET, P-Channel	Line 3	7-3	CR
151-1067-00	N	3N163	FET, P-Channel	Line 1	7-5	CR
151-1068-00	A	2N4340	FET, N-Channel	Line 13	7-2	CR
151-1069-00		WD212	FET, Si			TC
151-1070-00	A	2N5245	FET, N-Channel	Gr D, Ln 3	7-7	CR
151-1071-00	A	D2N5397	FET, N-Channel	Gr E, Ln 2	7-8	CS
151-1072-00	X	FD5017			7-10	NP
151-1073-00	A	D/2N3822	FET, N-Channel	Gr B, Ln 7	7-6	CR
151-1074-00						DL
151-1075-00						DL
151-1076-00		WN537	FET, N-Channel			TC
151-1076-01		WN537B	FET, N-Channel			TC
151-1077-00	A	2N5908	FET, N-Channel	Gr F, Ln 1	7-8	CR
151-1078-00	A	2N4393	FET, N-Channel	Line 14	7-2	CR
151-1078-01	X	Selected	FET, N-Channel			DL
151-1079-00	X	MEM660	FET, N-Channel		7-10	LR
151-1080-00		FBR750	NPN, Si			TC
151-1081-00	A	ITS3231	FET, N-Channel	Gr B, Ln 8	7-6	CR
151-1082-00	A	DN1285	FET, N-Channel	Gr E, Ln 3	7-8	CR
151-1083-00	X	MP3731	FET		7-10	DL
151-1084-00		WN744	FET, N-Channel			TC
151-1085-00	A	2N4117A	FET, N-Channel	Line 15	7-2	CR
151-1086-00	A	E2364	FET, N-Channel	Line 16	7-2	CR
151-1087-00		2SC1364	NPN, Si			SC
151-1089-00			FET, N-Channel			DL
151-1090-00	A	D/2N5397	FET, N-Channel	Gr E, Ln 4	7-8	CR
151-1090-01	X	Prestr & Tstd	FET, N-Chan, Dual			NP
151-1090-02	A	SF93007	FET, N-Channel	Gr E, Ln 5	7-8	CR
151-1090-03	A	Selected	FET, N-Channel		8-18	CR
151-1090-04	A	DN1882	FET, N-Channel	Gr E, Ln 6	7-8	CR
151-1090-05		ITS3680	FET, N-Channel			SC
151-1091-00		2N5912	FET, N-Channel			NP
151-1092-00		2SK23A	FET, N-Channel			SC
151-1093-00	N	SKA3704	FET, N-Channel			CR
151-1094-00			FET, N-Channel			TC
151-1095-00		2SA772	PNP, Si			SC
151-1096-00		2SC922	NPN, Si			SC
151-1097-00	A	SF88010	FET, P-Channel	Line 4	7-3	CR
151-1097-01		SF88010	FET, Si			PP
151-1098-00	N	CR585DC	FET, N-Channel	Line 1	7-4	CR
151-1099-00	A	Die Form	FET, N-Channel	Gr E, Ln 7	7-8	CR
151-1099-01	A	Inspected	FET, N-Channel			CR
151-1100-00	A	D/2N5397	FET, N-Channel	Gr E, Ln 8	7-8	CR
151-1100-01	A	D/2N5397	FET, N-Channel			CR
151-1100-02	A	Preconditioned	FET, N-Channel			CR
151-1101-00	X	2N5565	FET, N-Channel	Gr C, Ln 1	7-10	NP
151-1102-00	A	U431	FET, N-Channel	Gr F, Ln 2	7-8	CR
151-1103-00	A	SD210EE	FET, N-Channel	Line 2	7-4	CR
151-1104-00	X	CR702DB	FET, N-Channel		7-10	CS
151-1105-00	X	DN1567	FET, N-Channel		7-10	CR
151-1107-00	X	2N4391	FET, N-Channel		7-11	CR
151-1108-00	A	VMP22	FET, N-Channel	Line 3	7-4	CR
151-1109-00	A	SKA3789	FET, P-Channel			CR
151-1110-00	A	2N5434	FET, N-Channel	Line 17	7-2	CR
151-1111-00		2SK43-2	FET, N-Channel			SC
151-1112-00		2SK97-1	FET, Dual			SC

TRANSISTOR CROSS REFERENCE INDEX (CONT)

TEK PART NUMBER TO VENDOR NUMBER

PART NUMBER	** ND	JEDEC OR VENDOR NUMBER	TYPE (CATALOG SECTION)	INDEX CHARACTER	PAGE NO.	§§ ST
151-1112-01		2SK972	FET, N-Channel			SC
151-1113-00	N	2N4397	FET, N-Channel		7-11	CR
151-1114-00		N13T1	FET			SC
151-1115-00	N	SF93007	FET, N-Channel	Gr E, Ln 9	7-8	CR
151-1116-00		2SK18A-Y	FET, N-Channel			SC
151-1117-00	A	MD1000	FET, N-Channel	Gr F, Ln 3	7-8	CR
151-1118-00		SU2603	FET, N-Channel			TC
151-1118-01		SU2603	FET, N-Channel			TC
151-1119-00	A	ITS4000	FET, N-Channel	Line 4	7-4	CR
151-1120-00	A	VP0106	FET, P-Channel	Line 2	7-5	CR
151-1121-00	A	VN-3	FET, N-Channel	Line 5	7-4	CR
151-1122-00	N	FD1865	FET, N-Channel			PP
151-1123-00	X	2N4220	FET, N-Channel		7-11	PP
151-1124-00	A	J300	FET, N-Channel	Line 18	7-2	CR
151-1125-00		SU2603	FET, N-Channel			TC
151-1125-01		SU2603	FET, N-Channel			TC
151-1126-00		2SK97-2	FET, N-Channel			DL
151-1127-00	A	VN02	FET, N-Channel	Line 6	7-4	CR
151-1128-00	A	IRF9523	FET, P-Channel	Line 3	7-5	CR
151-1129-00		2SC2827	NPN, Si			SC
151-1130-00	A	VN12A4T5	FET, N-Channel	Line 7	7-4	OB
151-1131-00	N	FN4582	FET, N-Channel		7-11	CR
151-1132-00	N	F2968	FET, N-Channel		7-11	DL
151-1133-00	N	FN4579	FET, N-Channel		7-11	CR
151-1134-00	N	FN4594, F2972	FET, N-Channel		7-11	CR
151-1135-00		2SK113-Y	FET, N-Channel			SC
151-1136-00	A	IRF530	FET, N-Channel	Line 8	7-4	CR
151-1137-00	A	IRF630	FET, N-Channel			DL
151-1138-00	N	XSD226CM/CK	FET, N-Channel		7-11	DL
151-1139-00		7A11	FET, Dual			CR
151-1140-00		MPSA05/6	NPN, Si			DL
151-1141-00	A	STP3000	FET, N-Channel	Line 10	7-4	CR
151-1142-00	N	SLD3733	FET, N-Channel	Line 11	7-4	PP
151-1142-01		N13009BD	FET, N-Channel	Line 12	7-4	PP
151-1143-00	N	SH116	FET, N-Channel	Line 13	7-4	PP
151-1143-01			FET, N-Channel	Line 14	7-4	PP
151-1144-00	A	NH0167C	FET, N-Channel	Gr D, Ln 4	7-7	CR
151-1145-00	A	SLD4217	FET, N-Channel	Gr E, Ln 10	7-8	PP
151-1146-00	A	2N4416 DIE	FET, N-Channel	Line 19	7-2	CR
151-1146-01		2N4416, Pltd	FET, N-Channel			PP
151-1147-00	A	MPT564	FET, N-Channel	Line 15	7-4	PP
151-1148-00	N	U310	FET, N-Channel	Line 20	7-2	PP
151-1149-00		2SK121-3	FET			SC
151-1150-00		VN0Z	FET, N-Channel	Line 16	7-4	CR
151-1151-00		IRF710/MPT3N40	FET, N-Channel	Line 17	7-4	PP
151-1152-00		IRF820/MPT475	FET, N-Channel	Line 18	7-4	CR
151-1153-00		TRFS31	FET, N-Channel			SC
151-1154-00			FET, N-Channel			SC
151-1155-00			FET, N-Channel			SC
151-1156-00			NPN, Si			SC

§§ STATUS CODES

CR	Current Production
§ EN	Engineering
PP	Pre-Production
§ CS	Customer Service
§ NP	Non-Production
§ DL	Deleted
§ OB	Obsolete Instrument
CM	Custom Mod Instrument
§ DS	Digital Systems
§ OT	Obsolescent Instrument
MP	Modified Part
LR	Last Supply Current
LS	Last Supply Customer Service
VN	Vendor
TC	Telequipment Current Production
IN	International
SC	Sony/Tek Current Production

THE STATUS IN THIS CATALOG WAS CORRECT AT THE TIME IT WAS PUBLISHED, BUT IT IS SUBJECT TO CHANGE.

§ TO USE A PART WITH THIS STATUS ON A NEW INSTRUMENT REQUIRES THAT A NEW PURCHASED PART INITIATION FORM (PPIF) BE INITIATED.

(A GLOSSARY OF TERMS FOR THESE STATUS CODES CAN BE FOUND ON PAGE 0-44).

PART NUMBER	** ND	BASE P.N./ VENDOR NUMBER	TYPE (CATALOG SECTION)	INDEX CHARACTER	PAGE NO.	§§ ST
153-0501-00	X					OB
153-0502-00	X					NP
153-0503-00	X					DL
153-0504-00	X					DL
153-0505-00	X					NP
153-0506-00	X					NP
153-0507-00	X					NP
153-0508-00	X					NP
153-0509-00	X					NP
153-0510-00	X					NP
153-0511-00	N	151-0031-00	Selected			OB
153-0512-00	X					NP
153-0513-00	X					NP
153-0514-00	X					NP
153-0515-00	X					OB
153-0516-00	X					OB
153-0517-00	X					NP
153-0518-00	X					OB
153-0519-00	X					DL
153-0520-00	N	151-0010-00	Selected			OB
153-0521-00	N	151-0096-00	Selected			OB
153-0522-00	N	151-0103-00	Selected			OB
153-0523-00	X					CS
153-0524-00	N	151-0121-00	Matched & Checked			NP
153-0525-00	N	151-0120-00	Matched & Checked		8-20	CS
153-0526-00	N	151-0127-01	Matched & Checked		8-20	CS
153-0527-00	N	151-0108-01	Matched & Checked		8-20	CS
153-0528-00	N	151-0103-00	Selected		8-18	CR
153-0529-00	X					DL
153-0530-00	N	151-0131-00	Selected		8-18	CR
153-0531-00	X					NP
153-0532-00	N	151-0130-00	Selected			NP
153-0533-00	N	151-0108-01	Selected			OB
153-0534-00	N	151-0103-00	Matched & Checked		8-20	CS
153-0535-00	N	151-0133-00	Matched & Checked		8-20	CS
153-0536-00	N	151-0150-00	Matched & Checked		8-20	CS
153-0537-00	N	151-0142-00	Selected		8-19	CR
153-0538-00	N	151-0108-01	Matched & Checked			OB
153-0539-00	N	151-0103-00	Selected		8-19	CS
153-0540-00	X					DL
153-0541-00	X					NP
153-0542-00	N	151-0108-01	Selected			OT
153-0543-00	N	151-0108-01	Selected		8-19	OB
153-0544-00	N	151-0190-00	Selected			OB
153-0545-00	N	151-0108-01	Selected		8-19	OT
153-0546-00	N	151-0230-00	Selected		8-19	CS
153-0547-00	N	151-0198-01	Matched & Checked		8-20	CR
153-0548-00	N	151-0124-00	Matched & Checked		8-20	CS
153-0549-00	N	151-1005-00	Matched & Checked		8-20	CR
153-0551-00	N	151-1012-00	Matched & Checked			OB
153-0552-00	N					CS
153-0552-01	N	151-0225-00 151-0417-00 200-0781-01	Matched & Checked		8-20	CS
153-0553-00	N	151-0142-00 151-0282-00 214-0818-01	Matched & Checked		8-20	CS
153-0554-00	X					NP
153-0554-01	X					DL
153-0555-00	N	151-0133-00	Selected		8-19	CS
153-0556-01	N	151-0108-01	Matched & Checked		8-20	LR
153-0557-00	N	151-0190-00	Selected		8-19	CR
153-0558-00	N	151-0188-00	Matched & Checked		8-20	CR
153-0559-00	N	Mtchd 2N4416	FET (Dual & Pr)	Gr D, Ln 5	7-7	CR
153-0560-00	N	151-0131-00	Selected		8-19	CR
153-0561-00	N	151-1022-00	Matched & Checked		8-20	CS
153-0562-00	N					IN
153-0563-00	N	151-1006-00	Selected		8-19	CS
153-0564-00	N					DL
153-0565-00	N	151-0190-02	Matched & Checked		8-20	CR
153-0566-00		151-0202-00	Matched & Checked		8-21	CR
153-0567-00	X					DL
153-0568-00	X					NP
153-0569-00	N	151-0252-00	Matched & Checked		8-21	CS
153-0570-00	N	151-1005-00	Matched & Checked		8-21	CR
153-0571-00	N					NP
153-0573-00	N	151-1027-00	Matched & Checked			OB

** FOR NEW DESIGN CODES, SEE PAGE 9-26.

TRANSISTOR CROSS REFERENCE INDEX (CONT)

TEK PART NUMBER TO VENDOR NUMBER

PART NUMBER	** ND	BASE P.N./ VENDOR NUMBER	TYPE (CATALOG SECTION)	INDEX CHARACTER	PAGE NO.	§§ ST
153-0574-00	N	151-0103-00	Matched & Checked		8-21	CR
153-0575-00	N	151-0224-00	Matched & Checked		8-21	CR
153-0576-00	N	151-0124-00	Matched & Checked		8-21	CR
153-0577-00	N	151-0225-00	Matched & Checked		8-21	CS
153-0578-00	X					DL
153-0579-00	X					DL
153-0580-00	N	151-0202-00	Matched & Checked			OB
		151-0212-00				
		200-0945-02				
		200-0945-03				
		211-0001-00				
153-0581-00	N	151-0190-00	Matched & Ch-cked			OB
151-0582-00	N	S2114	Matched			CR
151-0583-00	N	151-0225-00	Selected		8-19	CR
153-0584-00	N	151-0230-00	Matched & Checked		8-21	CS
153-0585-00	X					DL
153-0586-00	N	151-0188-00	Matched & Checked		8-21	CR
153-0587-00	N	151-0190-02	Matched & Checked		8-21	CR
153-0588-00	N	151-0225-00	Selected		8-19	CR
153-0589-00	N	151-0330-00	Matched & Checked		8-21	CS
153-0590-00	N	151-0121-00	Matched & Checked		8-21	CS
		151-0272-00				
		200-1153-00				
		200-1155-00				
		211-0062-00				
153-0591-00	N	151-0212-00	Matched & Checked		8-21	CR
153-0592-00	N	151-0083-00	Selected			NP
153-0593-00	N	151-0150-00	Selected		8-19	CS
153-0594-00	N	151-0206-00	Matched & Checked		8-21	CR
153-0595-00	N	151-0225-00	Matched & Checked		8-21	CR
153-0596-00	N	151-0225-00	Matched & Checked		8-21	CR
153-0597-00	N	151-0221-00	Matched & Checked		8-21	CR
153-0597-01	N	151-0221-00	Matched & Checked		8-21	CR
153-0598-00	X					NP
153-0599-00	X					OB
153-0600-00	N					CS
153-0600-01	X					NP
153-0601-00	N					NP
153-0602-00	N	151-0192-00	Matched & Checked		8-21	CR
153-0603-01	N	151-0367-00	Matched & Checked		8-21	CR
		214-0973-00				
153-0604-00	X					NP
153-0605-00	N	151-0367-00	Selected		8-19	CS
153-0606-00	N	151-0221-00	Matched & Checked		8-22	CR
		151-0271-00				
153-0607-00	N	151-1032-00	Matched & Checked		8-22	CR
153-0608-00	X	151-0188-00	Matched & Checked			DL
153-0609-00	N	151-0271-00	Matched & Checked		8-22	CR
153-0610-00	N	151-0221-00	Matched & Checked		8-22	CR
		214-0973-00				
153-0610-01	N	151-0325-00	Matched & Checked			DL
153-0610-02	N	151-0221-06	Matched & Checked		8-22	CR
		214-0973-00				
153-0610-03	N	151-0221-06	Matched & Checked		8-22	MP
		200-0945-00				
		200-0945-01				
153-0611-00	N	151-0436-00	Matched & Checked		8-22	CS
153-0612-00	N	151-0192-00	Matched & Checked		8-22	CS
		151-0410-00				
		200-0945-03				
		200-0945-04				
		211-0001-00				
153-0612-01	N	151-0192-00	Matched & Checked			NP
		151-0410-00				
		200-0715-00				
153-0612-02	N	151-0188-00	Matched & Checked		8-22	CR
		151-0190-00				
		200-0715-00				
153-0613-00	N	151-0108-01	Matched & Checked		8-22	CR
153-0614-00	N	151-0288-00	Selected		8-19	CR
153-0615-00	N		Matched & Checked			CR
153-0616-00	X					DL
153-0617-00	N		Matched & Checked			IN
153-0618-00	N	151-1025-00	Matched & Checked		8-22	CR
153-0619-00	N	151-1078-00	Matched & Checked		8-22	CR
153-0621-00	N	151-0484-00	Matched & Checked		8-22	CR
153-0622-00	X					DL
153-0623-00	N	151-0233-00	Matched & Checked		8-22	CR
		151-0271-00				
153-0624-00	N	151-0427-00	Matched & Checked		8-22	CR
		214-1916-00				
153-0625-00	N					CR
153-0626-00	N	151-0423-00	Matched & Checked			CS
153-0627-00	N	151-0462-00	Matched & Checked		8-22	CR
153-0628-00	N	151-0464-00	Selected		8-19	CR
153-0629-00	N	151-0410-00	Matched & Checked		8-22	CR
153-0630-00	N	151-0462-00	Selected		8-19	CR
153-0631-00	N	151-0441-00	Matched & Checked		8-22	CR
153-0632-00	N					CR
153-0633-00	N	151-0282-00	Matched & Checked		8-22	CR
153-0634-00			Matched & Checked			IN
153-0635-00			Matched & Checked			IN
153-0636-00	N					CR
153-0637-00	X					NP
153-0638-00	X					NP
153-0639-00	X					CR
153-0640-00	X					NP
153-0641-00	X					DL
153-0642-00	N	151-0354-00	Selected		8-19	CR
153-0643-00	X					DL
153-0644-00	N	151-0271-00	Matched & Checked			NP
153-0645-00	N	151-0271-00	Matched & Checked			NP
153-0646-00	N	151-0190-00	Selected			CS
153-0647-00	N	151-0188-00	Selected		8-19	CS
153-0648-00	X					NP
153-0649-00	N	151-0426-01	Matched & Checked		8-22	CR
153-0650-00	N	151-0447-00	Matched & Checked		8-23	CR
153-0651-00	N					CR
153-0652-00	N	151-0679-00	Selected		8-19	CS
153-0653-00	N	151-0271-00	Matched & Checked		8-23	CR
153-0654-00	N	151-0712-00	Matched & Checked		8-23	PP
153-0655-00	N	151-0223-05	Matched & Checked		8-23	PP
		200-0945-00				
		200-0945-01				
156-0048-00	A	CA3046	Arrays		6-23	CR
156-0048-01	A	CA3046	Checked		6-23	CR
156-0048-02	N	CA3046	Checked		6-23	CR
156-0048-03	N	CA3046	Selected		6-23	CR
156-0065-00	N	CA3045	Arrays		6-23	CR
156-0065-01	N	CA3045	Arrays		6-23	CR
156-0068-00	N	CA3046	Arrays		6-23	CR
156-0197-00	A	CA3086	Arrays		6-23	CR
156-0197-01	N	CA3086	Checked		6-23	CR
156-0197-03	N	CA3086	Checked		6-23	CR
156-0259-00	A	CA3083	Arrays		6-23	CR
156-0259-01	N	CA3083	Selected		6-23	CR
156-0259-02	N	CA3083	Selected		6-23	CR
156-0281-00	A	CA3724G	Arrays		6-23	CR
156-0355-00	A	CA3081	Arrays		6-23	CR
156-0534-00	A	CA3102	Arrays		6-23	CR
156-0534-01	N	CA3102	Screened		6-23	CR
156-0901-00	A	CA3060	Arrays		6-23	CR
156-1163-00	A	MPQ2907	Arrays		6-23	CR
156-1190-00	A	CA3082	Arrays		6-23	CR
156-1245-00	A	ULN2003	Arrays		6-23	CR
156-1294-00	A	CA3127E	Arrays		6-23	CR
156-1303-00	A	SC500B	Arrays		6-23	CR
156-1303-01		SD5000	Screened		6-23	CR
156-1349-00	N	CA3054	Arrays		6-23	CR
156-1349-01	N	CA3054	Screened		6-23	OB
156-1381-00	A	CA3096AE	Arrays		6-23	CR
156-1450-00		CA3141E	Arrays		6-23	CR
156-1527-00	A	CA3183	Arrays		6-23	CR
156-1533-00	A	SD5002CM	Arrays		6-23	CR
156-1569-00	A	MHZ3467	Arrays		6-23	CR

§§ FOR STATUS CODES, SEE PAGE 9-17.

TRANSISTORS (CONT)

JEDEC TO TEK PART NUMBER INDEX

JEDEC NUMBER	PART NUMBER
2N138	151-1030-00
2N140	151-1040-00
2N169A	151-0033-00
2N204	151-0028-00
2N212	151-0005-00
2N214	151-0004-00
2N250	151-0018-00
2N270	151-0007-00
2N277	151-0002-00
2N291	151-0232-00
2N301	151-0001-00
2N301S	151-0009-00
2N307	151-0014-00
2N307A	151-0006-00
2N3336	151-0074-00
2N373	151-0017-00
2N394	151-0051-00
2N398A	151-0055-00
2N404	151-0010-00
2N407	151-0003-00
2N447A	151-0020-00
2N469A	151-0053-00
2N478	151-0029-00
2N499	151-0023-00
2N511	151-0043-00
2N544	151-0008-00
2N544S	151-0045-01
2N554	151-0034-00
2N588	151-0024-00
2N591	151-0019-00
2N597	151-0021-00
2N597	151-0021-01
2N599	151-0022-00
2N601	151-0036-00
2N636	151-0038-00
2N636	151-0049-00
2N636	151-0052-00
2N636A	151-0068-00
2N636	151-0068-01
2N640	151-0045-02
2N647	151-0030-00
2N650	151-0064-00
2N671	151-0012-00
2N675	151-0037-00
2N695 Fmly	151-0032-00
2N696	151-0152-00
2N700	151-0088-00
2N700 Fmly	151-0027-00
2N700 Fmly	151-0027-01
2N705	151-0044-00
2N706	151-0080-00
2N711A	151-0092-00
2N741	151-0085-00
2N769	151-0075-00
2N797	151-0077-00
2N835	151-0094-00
2N916	151-0177-00
2N918 Fmly	151-0109-00
2N918 Fmly	151-0109-01
2N918	151-0139-01
D2N918 Fmly	151-0139-00
2N918	151-0705-00
2N929 Fmly	151-0151-00
2N955 Fmly	151-0086-00
2N955	151-0097-00
2N962	151-0089-00
2N964 Fmly	151-0083-00
2N964 Fmly	151-0131-00
2N964	151-0131-01
2N967	151-0107-00
2N976	151-0123-00
2N1102	151-0026-00
2N1126	151-0013-00
2N1131	151-0119-00
2N1142	151-0115-00

JEDEC NUMBER	PART NUMBER
2N1143	151-0067-00
2N1195 Fmly	151-0130-00
2N1225	151-0084-00
2N1226	151-0091-00
2N1302	151-0040-00
2N1302 Fmly	151-0238-00
2N1303	151-0041-00
2N1304 Fmly	151-0069-00
2N1305	151-0071-00
2N1307	151-0182-00
2N1308 Fmly	151-0072-00
2N1377	151-0070-00
2N1378	151-0042-00
2N1381	151-0039-00
2N1384	151-0116-00
2N1429	151-0079-00
2N1478	151-0050-00
2N1488 Fmly	151-0113-00
2N1489 Fmly	151-0112-00
2N1504	151-0245-00
2N1516	151-0015-00
2N1517	151-0031-00
2N1529	151-0046-00
2N1529	151-0046-01
2N1545	151-0060-00
2N1564	151-0245-00
2N1592	151-0035-00
2N1631	151-0047-00
2N1632	151-0048-00
2N1637S	151-0045-00
2N1637	151-0284-00
2N1700	151-0066-00
2N1701	151-0125-00
2N1743	151-0144-00
2N1744	151-0145-00
2N1745	151-0146-00
2N1747	151-0147-00
2N1749	151-0081-00
2N1754 Fmly	151-0054-00
2N1893 Fmly	151-0096-00
2N1899 Fmly	151-0163-00
2N1905	151-0057-00
2N1990U	151-0257-00
2N1991	151-0065-00
2N1997	151-0078-00
2N2043	151-0093-00
2N2048	151-0076-00
2N2137A	151-0101-00
2N2140	151-0128-00
2N2147	151-0170-00
2N2148	151-0137-00
2N2156	151-0132-00
2N2191	151-0100-00
2N2192 Fmly	151-0183-00
2N2192	151-0183-01
2N2207	151-0063-00
2N2207	151-0129-00
2N2207 Fmly	151-0187-00
2N2218	151-0090-00
2N2218 Fmly	151-0310-00
2N2219 Fmly	151-0099-00
2N2219A	151-0103-00
2N2219F	151-0103-01
2N2219A	151-0103-02
2N2219	151-0309-00
2N2218A	151-0310-00
2N2222A	151-0302-00
2N2222A	151-0302-01
2N2222A	151-0302-02
D/2N2222A	151-0309-01
2N2339	151-0118-00
2N2369 Fmly	151-0127-00
2N2369 Fmly	151-0127-01
2N2369 Fmly	151-0127-02
2N2369 Fmly	151-0127-04

JEDEC NUMBER	PART NUMBER
2N2369	151-0457-00
2NC2369	151-0649-00
2NC2369	151-0649-01
2N2369 Fmly	151-0704-00
2N2375	151-0025-00
2N2375	151-0106-00
2N2475 Fmly	151-0120-00
2N2475 Fmly	151-0120-01
2N2475 Fmly	151-0120-02
2N2475 Fmly	151-0120-03
2N2484 Fmly	151-0126-00
2N2484 Fmly	151-0126-01
D/2N2484	151-0308-00
2N2501 Fmly	151-0108-00
2N2501 Fmly	151-0108-01
2N2605	151-0381-00
2N2635	151-0135-00
2N2644	151-0236-00
2N2654 Fmly	151-0063-01
2N2857 Fmly	151-0138-00
2N2857	151-0751-00
D/2N2857	151-0267-00
2N2905 Fmly	151-0087-00
2N2905A	151-0134-00
2N2905A	151-0134-01
2N2905A	151-0134-02
2N2907A Fmly	151-0164-00
2N2907A	151-0301-00
2N2907 Fmly	151-0307-00
2N2913 Fmly	151-0104-00
2N2918	151-0232-00
2N2918	151-0232-03
2N2923 Fmly	151-0153-00
2N2923	151-0166-00
2N2924 Fmly	151-0154-00
2N2925 Fmly	151-0155-00
2N2926	151-0156-00
2N2929 Fmly	151-0185-00
2N2996	151-0143-00
2N3013	151-0382-00
2N3053 Fmly	151-0136-00
2N3053 Fmly	151-0136-01
2N3053 Fmly	151-0136-03
2N3055H Fmly	151-0140-00
2N3055	151-0140-01
2N3055 Fmly	151-0140-02
2N3055H Fmly	151-0336-00
2N3055	151-0336-01
2N3055H Fmly	151-0337-00
2N3055	151-0337-01
2N3055	151-0433-00
2N3137 Fmly	151-0016-00
2N3137 Fmly	151-0160-00
2N3137	151-0339-00
2N3228	151-0505-00
2N3228	151-0520-00
2N3251	151-0133-00
2N3251	151-0133-01
2N3251	151-0133-02
2N3251	151-0133-03
2N3251 Fmly	151-0188-01
2N3251 Fmly	151-0188-03
2N3251 Fmly	151-0289-00
2N3251A	151-0383-00
2N3251	151-0459-00
2N3251	151-0459-01
2N3284	151-0161-00
2N3308 Fmly	151-0178-00
2N3324	151-0162-00
2N3403	151-0174-00
2N3403	151-0193-00
2N3409 Fmly	151-0176-00
2N3415 Fmly	151-0207-00
2N3439	151-0169-00
2N3440 Fmly	151-0150-00

JEDEC NUMBER	PART NUMBER
2N3440	151-0150-01
2N3440	151-0196-00
2N3441 Fmly	151-0149-00
2N3441	151-0149-01
2N3442	151-0209-00
2N3478	151-0173-00
2N3495S Fmly	151-0214-00
2N3495	151-0270-00
2N3495	151-0270-02
2N3499	151-0200-00
2N3500 Fmly	151-0121-00
2N3501 Fmly	151-0124-00
2N3501 Fmly	151-0124-02
2N3501 Fmly	151-0274-00
2N3501	151-0274-01
2N3503 Fmly	151-0124-03
2N3503	151-0124-04
2N3528	151-0514-00
2N3553	151-0338-00
2N3563 Fmly	151-0225-00
2N3563 Fmly	151-0259-00
2N3563 Fmly	151-0427-00
2N3563	153-0595-00
2N3563	153-0596-00
2N3565 Fmly	151-0341-00
2N3565	151-0432-00
2N3569	151-0384-00
2N3572 Fmly	151-0212-01
2N3584 Fmly	151-0210-00
2N3584 Fmly	151-0316-00
2N3584	151-0316-01
2N3585 Fmly	151-0241-00
2N3605 Fmly	151-0159-00
2N3614 Fmly	151-0165-00
2N3638	151-0397-00
2N3640	151-0199-00
2N3640	151-0199-01
2N3640	151-0199-02
2N3640	151-0199-03
2N3640	151-0199-04
2N3646	151-0393-00
2N3662	151-0175-00
2N3669	151-0507-00
2N3669	151-0507-01
D/2N3684 Fmly	151-1007-00
2N3684 Fmly	151-1037-00
2N3684 Fmly	151-1044-00
D/2N3684 Fmly	151-1047-00
D/2N3684 Fmly	151-1049-00
D/2N3684 Fmly	151-1054-00
2N3692	151-0224-01
2N3692	151-0224-02
2N3702	151-0244-00
2N3716	151-0633-00
2N3722 Fmly	151-0604-00
2N3725	151-0655-00
2N3739	151-0201-00
2N3741	151-0227-00
2N3767 Fmly	151-0226-00
2N3771	151-0275-00
2N3773 Fmly	151-0291-00
2N3773 Fmly	151-0487-00
2N3791	151-0644-00
2N3808 Fmly	151-0261-00
2N3808	151-0261-01
D/2N3822 Fmly	151-1010-00
D/2N3822 Fmly	151-1011-00
D2N3822 Fmly	151-1011-01
D/2N3822 Fmly	151-1029-00
D/2N3822 Fmly	151-1041-00
D/2N3822 Fmly	151-1049-00

TRANSISTORS (CONT)

JEDEC TO TEK PART NUMBER INDEX

9

JEDEC NUMBER	PART NUMBER
D/2N3822 Fmly	151-1049-01
D/2N3822 Fmly	151-1050-00
D/2N3822 Fmly	151-1057-00
D/2N3822 Fmly	151-1073-00
D/2N3822 Fmly	151-1081-00
2N3829	151-0398-00
2N3854A	151-0638-00
2N3866 Fmly	151-0211-00
2N3866 Fmly	151-0446-00
2N3877	151-0179-00
2N3896	151-0526-00
2N3902 Fmly	151-0266-00
2N3904	151-0190-00
2N3904	151-0190-01
2N3904	151-0190-02
2N3904	151-0190-03
2N3904	151-0190-04
2N3904	150-0190-05
2N3904	151-0190-06
2N3904	151-0190-07
2N3904 Fmly	151-0224-00
2N3904 Fmly	151-0706-00
2N3906	151-0188-00
2N3906	151-0188-02
2N3906 Fmly	151-0220-00
2N3906	151-0220-01
2N3906	151-0220-02
2N3906 Fmly	151-0220-03
2N3906	151-0220-04
2N3906	151-0220-05
2N3923 Fmly	151-0407-00
2N3923 Fmly	151-0407-01
2N3923 Fmly	151-0407-02
2N3933 Fmly	151-0277-00
2N3933 Fmly	151-0283-00
2N3947	151-0460-00
2N3955	151-1044-00
2N3958 Fmly	151-1054-00
2N3958 Fmly	151-1054-01
2N3958 Fmly	151-1054-02
2N3959 Fmly	151-0189-00
2N3959 Fmly	151-0193-00
2N3959	151-0194-00
2N3959 Fmly	151-0205-00
D/2N3959 Fmly	151-0461-00
2N3959	151-0461-01
2N4036 Fmly	151-0208-00
2N4036	151-0208-01
2N4036 Fmly	151-0208-02
2N4036	151-0208-03
2N4036	151-0208-04
2N4063	151-0240-00
2N4080 Fmly	151-0215-00
2N4091	151-1021-02
2N4103	151-0511-00
2N4111	151-0239-00
2N4117A	151-1085-00
2N4122	151-0493-00
2N4124	151-0192-00
2N4124	151-0192-03
2N4208	151-0458-00
2N4220	151-1014-00
2N4220	151-1123-00
2N4240	151-0251-00
2N4249 Fmly	151-0342-00
2N4249	151-0342-01
2N4250	151-0219-00
2N4251 Fmly	151-0213-00
2N4251 Fmly	151-0222-00
2N4258	151-0221-00
2N4258	151-0221-01
2N4258	151-0221-02
2N4258	151-0221-03
2N4258	151-0221-04
2N4258	151-0221-05

JEDEC NUMBER	PART NUMBER
2N4258 Fmly	151-0325-00
2N4258 Fmly	151-0325-01
2N4258	151-0327-00
2N4261 Fmly	151-0202-00
2N4261 Fmly	151-0271-00
D/2N4261 Fmly	151-0272-00
2N4261 Fmly	151-0294-00
2N4261 Fmly	151-0434-00
2N4261	151-0434-01
2N4261	151-0434-02
2N4275	151-0223-02
2N4275	151-0223-03
2N4302 Fmly	151-1004-00
2N4303 Fmly	151-1005-00
2N4303	151-1005-02
2N4303 Fmly	151-1015-00
2N4304 Fmly	151-1006-00
2N4304 Fmly	151-1016-00
2N4304 Fmly	151-1026-00
2N4340	151-1068-00
2N4348 Fmly	151-0218-00
2N4352 Fmly	151-1024-00
2N4391 Fmly	151-1021-00
2N4391 Fmly	151-1021-01
2N4391 Fmly	151-1064-00
2N4391 Fmly	151-1064-01
D/2N4391	151-1107-00
2N4392 Fmly	151-1022-00
D/2N4393 Fmly	151-1027-00
D/2N4393 Fmly	151-1036-00
D/2N4393 Fmly	151-1046-00
2N4393 Fmly	151-1078-00
D/2N4393	151-1101-00
2N4401	151-0736-00
2N4416 Fmly	151-1012-00
2N4416 Fmly	151-1025-00
2N4416 Fmly	151-1025-01
D/2N4416 Fmly	151-1031-00
D/2N4416	151-1035-00
D/2N4416 Fmly	151-1042-00
D/2N4416	151-1070-00
2N4416 DIE	151-1146-00
D/24416	153-0559-00
2N4417	151-1023-00
D/2N4417	151-1034-00
2N4441	151-0515-00
2N4800	151-1065-00
2N4851	151-0504-00
2N4851	151-0504-01
2N4852	151-0510-00
2N4853	151-0513-00
2N4854	151-0287-00
2N4888 Fmly	151-0228-00
2N4888 Fmly	151-0228-01
2N4890	151-0235-00
2N4890 Fmly	151-0322-00
2N4890 Fmly	151-0389-00
2N4895	151-0290-00
2N4898	151-0312-00
2N4905	151-0258-00
2N4916	151-0396-00
2N4931	151-0280-00
2N4931	151-0280-01
2N5039	151-0603-00
2N5060	151-0503-00
2N5063	151-0519-00
2N5087	151-0276-00
2N5087 Fmly	151-0453-00
2N5088	151-0195-00
2N5088	151-0639-00
2N5109 Fmly	151-0451-00
2N5109 Fmly	151-0451-01
2N5139	151-0395-00
2N5160 Fmly	151-0285-00
2N5160	151-0285-01

JEDEC NUMBER	PART NUMBER
2NC5160	151-0682-00
2NC5160	151-0682-01
2N5179	151-0282-00
2N5179 Fmly	151-0441-00
2N5179 Fmly	151-0441-01
2N5179 Fmly	151-0441-03
2N5179 Fmly	151-0662-00
2N5189	151-0260-01
2N5191	151-0400-00
2N5239	151-0315-00
2N5245 Fmly	151-1025-00
2N5245 Fmly	151-1070-00
2N5249 Fmly	151-0273-00
2N5294 Fmly	151-0262-00
2N5305 Fmly	151-0281-00
2N5308 Fmly	151-0253-00
2N5308 Fmly	151-0253-01
2N5308	151-0254-00
2N5308	151-0254-01
D/2N5393 Fmly	151-1029-00
D/2N5397	151-0082-00
D/2N5397	151-0099-00
D/2N5397 Fmly	151-1032-00
D/2N5397 Fmly	151-1032-01
D/2N5397 Fmly	151-1032-02
D/2N5397 Fmly	151-1058-00
D/2N5397 Fmly	151-1071-00
D/2N5397 Fmly	151-1090-00
D/2N5397	151-1100-00
2N5401	151-0350-00
2N5401	151-0350-01
2N5401	151-0350-02
2N5401	151-0372-00
2N5401 Fmly	151-0406-00
2N5401 Fmly	151-0406-01
2N5401 Fmly	151-0406-02
2N5416-17	151-0385-00
2N5434	151-1110-00
2N5454 Fmly	151-1042-00
2N5454 Fmly	151-1042-01
2N5454 Fmly	151-1042-02
2N5460	151-1045-00
2N5461	151-1109-00
2N5462	151-1039-00
2N5462	151-1039-01
2N5551 Fmly	151-0250-00
2N5551 Fmly	151-0250-01
2N5551 Fmly	151-0347-00
2N5551	151-0624-00
2N5565	151-1011-00
2N5565	151-1011-01
2N5583 Fmly	151-0450-00
2N5583 Fmly	151-0450-01
2N5652	151-0330-00
2N5758	151-0485-00
2N5769 Fmly	151-0223-00
2N5769 Fmly	151-0223-01
2N5769	151-0424-00
2N5769	151-0424-01
2N5769	151-0424-02
2N5769	151-0424-03
2N5769 Fmly	151-0437-00
2N5770	151-0471-00
2N5771	151-0221-00
2N5836 Fmly	151-0448-00
2N5841 Fmly	151-0298-00
2N5841 Fmly	151-0447-00
2N5859	151-0260-00
2N5859	151-0260-02
2N5908	151-1077-00
2N5912	151-1091-00
2N5943 Fmly	151-0411-00
2N5947	151-0474-00
2N5956 Fmly	151-0299-00

JEDEC NUMBER	PART NUMBER
2N5962 Fmly	151-0455-00
2N5962 Fmly	151-0456-00
2N5962 Fmly	151-0484-00
2N6027	151-0508-00
2N6027	151-0516-00
2N6027	151-1033-00
2N6041	151-0657-00
2N6044	151-0656-00
2N6085 Fmly	151-0236-00
2N6101	151-0363-00
2N6227	151-0419-00
2N6241	151-0527-00
2N6256	151-0617-00
2N6304 Fmly	151-0212-00
2N6258	151-0413-00
2N6304 Fmly	151-0442-00
2N6304 Fmly	151-0442-01
2N6308 Fmly	151-0368-00
2N6308 Fmly	151-0368-01
2N6308 Fmly	151-0368-02
2N6400	151-0528-00
2N6534	151-0653-00
2N6558	151-0615-00
2N6558	151-0615-01
2N6559	151-0693-00
2N6559	151-0693-01
2N6586 Fmly	151-0703-00
2N6591 Fmly	151-0728-00
2N48888	151-0357-00
3N83	151-0517-00
3N138	151-1030-00
3N140	151-1040-00
3N159 Fmly	151-1055-00
3N163	151-1067-00

TRANSISTORS (CONT)

MANUFACTURER PART NUMBER TO TEK PART NUMBER INDEX

MFG. PART NO.	TEK PART NO.
A22	151-0342-00
A210	151-0288-00
A210	151-0329-00
A485	151-0300-00
A485	151-0212-00
A705	151-0346-01
A2607	151-0268-00
A2662	151-0288-00
A2728	151-0300-00
A2962	151-0449-00
A5T3571	151-0402-00
A5T3571	151-0367-00
A5T3571	151-0367-01
A5T4260	151-0369-00
A5T4260	151-0369-01
A5T4260	151-0369-02
A5T5058	151-0292-00
A5T5058	151-0292-01
A5T5058	151-0292-02
A5T6450	151-1093-00
A8T3702	151-0164-00
AF239	151-0161-00
B1182	151-0483-00
BC107	151-0326-00
BC107	151-0326-01
BC109C	151-0317-00
BC109C	151-0317-01
BC208C	151-0492-00
BC263C	151-0401-00
BD131	151-0681-00
BD238	151-0335-00
BD419	151-0692-00
BD437	151-0323-00
BD438	151-0324-00
BDX36	151-0479-00
BDX36	151-0479-01
BDX83C	151-0454-00
BF257	151-0412-00
BF258	151-0602-00
BF259	151-0343-00
BF297	151-0360-00
BF305	151-0257-01
BF464	151-0612-00
BF467	151-0676-00
BFQ17	151-0715-00
BFR91	151-0475-00
BFR91	151-0475-01
BFR92	151-0636-00
BFR96	151-0752-00
BFS17	151-0662-00
BFS17	151-0705-00
BFT93	151-0713-00
BFW1051	151-1052-00
BFX20	151-0127-03
BFX48	151-0320-02
BFYS1	151-0318-00
BFY90	151-0212-02
BSR17	151-0706-00
BSV52	151-0704-00
BSY95A	151-0246-00
BU208	151-0635-00
BU208A	151-0449-00
BU208A	151-0449-01
BU210	151-1135-00
BUX86	151-0311-01
BUY698	151-0420-00
BUZ-41	151-1147-00
C22	151-0341-00
C122B1X70	151-0521-00
C444	151-0171-00
C137PBX152	151-0524-00
C220	151-0500-00
C106B2	151-0506-00
C106B2X283	151-0506-00
CA3039	156-0106-00
CA3045	156-0065-00
CA3046	156-0048-00
CA3060	156-0901-00
CA3081	156-0355-00
CA3082	156-1190-00
CA3083	156-0259-00
CA3086	156-0197-00
CA3102	156-0534-00
CA3724G	156-0281-00
CB203	151-0529-00
CD2193	151-0448-00
CD2357	151-0494-00
CD3921	151-0709-00
CDQ10243	151-0096-00
CDQ10662	151-0136-00
CM7219	151-0180-00
CR585DC	151-1098-00
CR702DB	151-1104-00
CS23214	151-0259-00
CS23366	151-0225-00
CS23382	151-0224-00
CS23240	151-0159-00
CS29015	151-0232-01
CS29015	151-0249-00
CT1200	151-0011-00
D25	151-0281-00
D41E	151-0440-00
D058C	151-0428-00
D075A	151-0408-00
D078B	151-0409-00
D102	151-0430-00
D103	151-0416-00
D156	151-0614-00
D180	151-0627-00
D180	151-0659-00
D186	151-0627-00
D186	151-0627-01
D40C5	151-0331-00
D40C5	151-0332-00
D40E7	151-0439-00
D40K2	151-0496-00
D41E7	151-0463-00
D42C9	151-0365-00
D43C8	151-0364-00
D43C8	151-0364-01
D44C6	151-0352-00
D44C6	151-0352-01
D44C8	151-0743-00
D44C9	151-0473-00
D44H3	151-0620-00
D44H3	151-0621-00
D44H3	151-0621-01
D44R4	151-0358-00
D44R4	151-0358-01
D44R4	151-0358-02
D44H11	151-0426-00
D44H11	151-0426-01
D44H11	151-0426-02
D4209	151-0467-00
D44T4	151-0358-00
D45C6	151-0366-00
D45H11	151-0625-00
D45H485	151-0729-00
D/A485	151-0268-00
DCC48	151-0743-00
DL408	151-0307-00
DN399	151-1032-00
DN480A	151-1027-00
DN480A	151-1027-01
DN497	151-1007-00
DN500	151-1011-00
DN870	151-1031-00
DN872	151-1049-00
DN1114	151-1054-00
DN1120	151-1071-00
DN1285	151-1082-00
DN1332	151-1077-00
DN1336	151-1034-00
DN1567	151-1105-00
DN1663	151-1036-00
DN1836	151-1029-00
DN1882	151-1090-04
DTG2400	151-0158-00
DTS402	151-0314-00
DTS411	151-0256-00
DTS411	151-0256-01
DTS721	151-0468-00
DTS1010	151-0454-00
D/UC210	151-1008-00
D/UC210	151-1009-00
D/UC400	151-1072-00
D/UC4001	151-1060-00
E112	151-1056-00
E309	151-1086-00
E421	151-1061-00
E1530	151-0310-01
E2269	151-1070-00
E2270	151-1059-00
E2364	151-1086-00
E6021	151-1066-00
E7026	151-1061-00
EP808	151-0358-00
EP1425	151-0477-00
EP1809	151-0368-00
EP2785	151-0660-00
EP2970	151-0423-00
EP8010	151-0606-00
EP8106	151-0607-00
EP9236	151-0633-00
EP9237	151-0644-00
F1234	151-1022-00
F1333	151-1017-00
F1499	151-1015-00
F1585	151-1012-00
F1763	151-1021-00
F1782	151-1022-00
F1782	151-1022-01
F2232	151-1004-00
F2233	151-1005-00
F2234	151-1006-00
F2234	151-1066-00
F2263	151-1025-00
F2395	151-1026-00
F2594	151-1068-00
F2651	151-1078-00
F2700	151-1085-00
F2873	151-1113-00
F2942	151-1124-00
F2968	151-1132-00
F2972	151-1134-00
F2975	151-1028-00
F2986	151-1015-02
F2987	151-1012-01
F2996	151-1093-00
F3006	151-1085-00
F5393	151-1048-00
F5526	151-1097-00
FD1121	151-1007-00
FD1136	151-1008-00
FD1154	151-1009-00
FD1167	151-1011-00
FD1173	151-1010-00
FD1392A	151-1027-00
FD1551	151-1036-00
FD1553	151-1037-00
FD1560	151-1019-00
FD1582	151-1041-00
FD1607	151-1046-00
FD1620	151-1049-00
FD1623	151-1047-00
FD1632	151-1050-00
FD1644	151-1054-00
FD1662	151-1057-00
FD1720	151-1073-00
FD1764	151-1054-01
FD1789	151-1031-00
FD1865	151-1122-00
FD1867	151-1032-00
FD5017	151-1072-00
FD5018	151-1060-00
FM3955	151-1044-00
FMT4020	151-0608-00
FMT4225	151-0609-00
FMT4225	151-0609-01
FMT5092	151-0269-00
FMT5093	151-0472-00
FMX5032	151-0605-00
FN222	151-1001-00
FN222	151-1001-01
FN389	151-1014-00
FN390	151-1015-00
FN391	151-1016-00
FN684	151-1004-00
FN686	151-1006-00
FN742B	151-1020-00
FN815	151-1021-00
FN1230	151-1026-00
FN1234	151-1022-00
FN1919	151-1001-00
FN1919	151-1001-01
FN2742	151-1068-00
FN3341	151-1085-00
FN4535	151-1131-00
FN4572	151-1021-02
FN4572	151-1134-00
FN4579	151-1133-00
FN4582	151-1131-00
FN4594	151-1134-00
FP39291	151-0225-00
FPSA92	151-0443-02
FPT100A	151-0252-00
FPT110	151-0629-00
FPT120A	151-0648-00
FPT167A	151-0628-00
FPT220	151-0628-00
FPT5122	151-0313-00
FRB749	151-0257-03
FRB750	151-0490-00
FRB750	151-1080-00
FT47	151-0497-00
FT50	151-0423-00
FT317A	151-0674-00
FT417B	151-0647-00
GA1392	151-0062-00
GA3461	151-0238-00
GA3802	151-0040-00
GA3803A	151-0072-00
GA3804	151-0069-00
GET118	151-0248-00
GET119	151-0243-00
GET126	151-0247-00
GET2925	151-0328-00
GET5308	151-0254-00
GL14	151-0054-00
GM1030	151-0130-00
HDA420	151-0329-00
HT403	151-0058-01
HVG104	151-0635-00
IRF513	151-1127-00
IRF530	151-1136-00
IRF630	151-1137-00
IRF710	151-1151-00
IRF731	151-1147-00
IRF820	151-1152-00
IRF9523	151-1128-00

9

TRANSISTORS (CONT)

MANUFACTURER PART NUMBER TO TEK PART NUMBER INDEX

MFG. PART NO.	TEK PART NO.
IT121	151-0353-00
ITS1074	151-0236-00
ITS1200A	151-0354-00
ITS1251	151-0353-00
ITS1277-1	151-0308-00
ITS1296	151-0232-00
ITS1390	151-0232-02
ITS3231-1	151-1081-00
ITS3539	151-1032-00
ITS3546	151-1003-00
ITS3550	151-1029-00
ITS30681	151-1110-00
ITS30880/D	151-1099-00
ITS30918	151-1090-02
ITS30929	151-1090-00
ITS30974	151-1110-00
ITS31259	151-1042-00
ITS31504	151-1097-00
ITS4000	151-1119-00
J300	151-1124-00
J309	151-1086-00
J2012	151-1042-00
J2022	151-1025-00
J2033	151-1005-00
J2133	151-1078-00
J2400	151-1124-00
J2426	151-1070-00
J6011	151-1066-00
JANTX4091	151-1021-02
KD4391	151-1064-00
KDC5521	151-0351-00
KEM102	151-0264-00
KEM103	151-0265-00
KK416	151-1023-00
LM394H	151-0619-00
LPT110B	151-0488-00
M100	151-1002-00
M5106	151-1067-00
MAC2-2	151-0523-00
MAC2-2	151-0532-00
MCR106-4	151-0530-00
MCR206	151-0529-00
MCR649P1	151-0533-00
MD97	151-0054-00
MD1000	151-1117-00
MD2219A	151-0309-00
MD2369B	151-0422-00
MD2369B	151-1074-00
MD23698B	151-1075-00
MDS60	151-0612-00
MDS60	151-0612-01
MDS60	151-0694-00
MDS60	151-0694-01
MDS160	151-0694-00
MEM660/BK	151-1079-00
MF3771	151-0470-00
MFE3001	151-1002-00
MJ2500	151-0495-00
MJ2955	151-0258-00
MJ6586	151-0703-00
MJ12002	151-0346-00
MJ12004	151-0747-00
MJE224	151-0466-00
MJE234	151-0465-00
MJE340	151-0311-00
MJE340	151-0311-01
MJE340	151-0311-02
MJE340	151-0613-00
MJE350	151-0698-00
MJE370	151-0335-00
MJE370	151-0335-01
MJE371	151-0324-00
MJE371	151-0324-01
MJE520	151-0334-00
MJE520	151-0334-01

MFG. PART NO.	TEK PART NO.
MJE521	151-0323-00
MJE521	151-0323-01
MJE700	151-0429-00
MJE800	151-0405-00
MJE1092	151-0414-00
MJE1101	151-0425-00
MJE1102	151-0415-00
MJE1661	151-0469-00
MJE2801	151-0349-00
MJE2801	151-0349-01
MJE2801	151-0349-03
MJE2801	151-0349-04
MJE2801	151-0349-05
MJE2801	151-0436-00
MJE2901	151-0373-00
MJE2901	151-0373-01
MJE3771	151-0470-00
MJE13003	151-0634-00
MJE13005	151-0678-00
MJE13007	151-0632-00
MJE13009	151-0679-00
MM4003	151-0280-00
MM4049	151-0296-00
MM4049	151-0362-00
MM4049	151-0362-01
MMBFU310	151-1148-00
MMBR920	151-0636-00
MMBT918	151-0705-00
MMBT2369	151-0704-00
MMBT2857	151-0714-00
MMBT3904	151-0706-00
MMBT3906	151-0700-00
MMBT4260	151-0713-00
MMBTH81	151-0663-00
MMCS3866	151-0498-00
MMT3960A	151-0293-00
MMT3960A	151-0293-01
MMT3960A	151-0380-00
MMT4261	151-0294-01
MP504	151-0102-00
MP3731	151-0483-00
MP3731	151-1083-00
MPS834	151-0242-00
MPS918	151-0198-00
MPS918	151-0198-01
MPS918	151-0198-02
MPS918	151-0198-03
MPS918	151-0333-00
MPS918	151-0333-01
MPS3640	151-0197-00
MPS3563	151-0225-00
MPS3640	151-0199-04
MPS3640	151-0664-00
MPS3702	151-0641-00
MPS5551M	151-0347-00
MPS6515	151-0195-01
MPS6516	151-0195-00
MPS6516	151-0255-00
MPS6517	151-0481-00
MPS6518	151-0320-00
MPS6518	151-0320-01
MPS6521	151-0192-00
MPS6521	151-0192-01
MPS6523	151-0216-00
MPS6523	151-0216-01
MPS6523	151-0216-02
MPSA06	151-0645-00
MPSA42	151-0444-00
MPSA42	151-0444-01
MPSA42	151-0444-03
MPSA42	151-0750-00
MPSA55	151-0646-00
MPSA65	151-0435-00
MPSA92	151-0443-00
MPSA92	151-0443-01

MFG. PART NO.	TEK PART NO.
MPSH05	151-0637-00
MPSH10	151-0711-00
MPSH11	151-0711-00
MPSH55	151-0740-00
MPSH81	151-0438-00
MPSH81	151-0438-01
MPSH81	151-0663-00
MPSHS81	151-0712-00
MPSU10	151-0359-00
MPSU45	151-0390-00
MPSU45	151-0390-01
MPSU95	151-0391-00
MPT3N4D	151-1151-00
MRF511	151-0474-00
MRF5175	151-0695-00
MRX3866	151-0715-00
MS12273	151-0136-00
MTP564	151-1147-00
MU227	151-1002-00
MU552	151-1067-00
N311	151-1114-00
NO1003N3	151-1121-00
N13009BD	151-1142-01
ND62337	151-0261-00
ND07472	151-0104-00
ND07480	151-0232-00
NE41632B	151-0472-00
NE57835	151-0689-00
NE64310D	151-0213-01
NE64535	151-0608-00
NE73432B	151-0269-00
NE73435	151-0631-00
NE73435	151-0754-00
NE74000	151-0661-00
NE02103	151-0658-00
NE02103-D	151-0658-00
NE02135	151-0630-00
NE02107E	151-0626-00
NH0167C	151-1144-00
N1110	151-0095-00
NS7383	151-0104-00
NS7406	151-0261-00
NS7909	151-0287-00
NS07480	151-0232-00
NS12063	151-0183-00
NS12273	151-0136-00
NS20397	151-0302-00
NS48051	151-0279-00
NS63334	151-0134-00
NS12363	151-0136-03
NS14069	151-0183-00
NS67065	151-0208-00
NS0123	151-0728-00
NSD0123	151-0728-00
NT350	151-0698-00
NTC2333L	151-0423-00
NTM3906	151-0700-00
NZD0114C	151-1058-00
NZD0125C	151-1100-00
ON532	151-0714-00
P1182E	151-1066-00
PIC1068	151-0654-00
PN2369	151-0680-00
PT1928-1	151-0163-00
PT9223	151-0703-00
RCA29C	151-0462-00
RCA30C	151-0462-00
RCA31A	151-0478-00
RCA31C	151-0476-00
RCA32C	151-0482-00
RCA47	151-0497-00
RF1011	151-0446-00
RLB511	151-0338-00
RS1815	151-0058-00
RS1816	151-0058-00

MFG. PART NO.	TEK PART NO.
RS2203	151-0301-00
RS3015	151-0604-00
RS3263	151-0126-00
RS3303	151-0302-00
RT2582	151-0151-00
RT3998	151-0183-00
RT5204	151-0058-00
RT5588	151-0096-00
RTD0440	151-0509-00
S1950	153-0559-00
S2002	151-0348-00
S2010	151-1034-00
S2089	151-1042-00
S2154	151-1070-00
S3430	151-0059-00
S5835	151-0109-01
S5909	151-0122-00
S159011	151-0274-00
S2114	151-0582-00
S21766	151-0417-00
S21862	151-0228-00
S24850	151-0224-00
S25381	151-0279-00
S35924	151-0188-00
S36521	151-0350-00
S38487	151-0302-00
S38704	151-0437-00
S39061	151-0452-00
S39062	151-0453-00
S39287	151-0427-00
S39288	151-0259-00
S39291	151-0225-00
S39649	151-0457-00
S39651	151-0459-00
S39652	151-0460-00
S39875	151-0471-00
S39968	151-0484-00
S39988	151-0456-00
S42530	151-0221-02
S42140	151-0604-00
S43187	151-0435-00
S43851	151-0471-01
S48044A	151-0279-00
S50442	151-0423-00
S50728	151-0279-00
S50910	151-0462-00
SA1447	151-0232-00
SA1937	151-0307-00
SA1938	151-0309-00
SA2700	151-0236-00
SA2706	151-0232-00
SA2855	151-0308-00
SA2856	151-0309-00
SA5709	151-0435-00
SA24850	151-0224-00
SAB6710	151-0202-00
SAC145K	151-0523-00
SAC8184	151-0434-00
SBF1370	151-1013-00
SC92D	151-0539-00
SC140D	151-0532-00
SC141DX164	151-0522-00
SC141D1X164	151-0522-00
SC146D	151-0537-00
SC146DX176	151-0537-00
SC261DX24	151-0540-00
SC3000	151-0474-00
SCR356	151-0502-00
SCR1256K	151-0515-01
SCR5016K	151-0519-00
SCR5138	151-0503-00
SD39	151-0287-00
SD210EE	151-1103-00
SD220	151-1104-00
SD220H	151-1104-00

TRANSISTORS (CONT)

MANUFACTURER PART NUMBER TO TEK PART NUMBER INDEX

MFG. PART NO.	TEK PART NO.
SD222DE	151-1098-00
SD222DC	151-1098-00
SD356	151-0693-00
SD441	151-0261-00
SD4441-1	151-0261-01
SD51	151-0642-00
SD554	151-0178-00
SD555	151-0176-00
SD569	151-0139-00
SD1006	151-0451-00
SD1300	151-0293-00
SD1301	151-0442-00
SD1305	151-0213-00
SD1306	151-0472-00
SD1307	151-0267-00
SD1307	151-0441-00
SD1311	151-0269-00
SD1330	151-0127-00
SD1911	151-0307-00
SD3167	151-0309-00
SD3174	151-0467-00
SD3179	151-0139-00
SD4453	151-0272-00
SD5000	156-1303-01
SD24849	151-0221-00
SD43123	151-0624-00
SDS352	151-0439-00
SDS353	151-0440-00
SDS354	151-0463-00
SDS356K	151-0693-00
SDS357	151-0694-00
SDS358K	151-0615-00
SDS359	151-0612-00
SDS363	151-0728-00
SE2178	151-0226-00
SE3167	151-0309-00
SE4002	151-0392-00
SE5036	151-0452-00
SE7056	151-0279-00
SE7056	151-0279-01
SE7056	151-0279-02
SE7056	151-0279-03
SE7056	151-0279-04
SE7057	151-0297-00
SENT139	151-0487-00
SES1562	151-0338-00
SF50031	151-1042-00
SF50075	151-1025-00
SF55037	151-1005-00
SF88010	151-1097-00
SF88025	151-1066-00
SF90001	151-1032-00
SF91000	151-1028-00
SF93004	151-1090-00
SF93007	151-1090-02
SF93007	151-1115-00
SF93008	151-1099-00
SF96007A	151-1101-00
SFB1369	151-1011-00
SFB1370	151-1013-00
SFB8129	151-1025-00
SFB8822	151-1027-00
SFB8823	151-1029-00
SFC2147	151-1022-00
SFC2505	151-1032-00
SFC6220	151-1050-00
SFC7090	151-1070-00
SFD1922	151-1105-00
SFD3143	151-1049-00
SFE034	151-1024-00
SFE523	151-1055-00
SFE844M2	153-0559-00
SFE846	151-1002-00
SFK93004	151-1115-00

MFG. PART NO.	TEK PART NO.
SGC2622	151-0279-00
SGC7282	151-0406-00
SGD2254	151-0190-06
SGD2263	151-0460-00
SH116	151-1143-00
SJ2304	151-0256-00
SJ2304H	151-0256-01
SJ2754	151-0368-00
SJ2758	151-0314-00
SJ2913	151-0241-00
SJ2914	151-0346-00
SJ2914H	151-0346-01
SJ2937	151-0210-00
SJ2943	151-0433-00
SJ2967	151-0251-00
SJ2968	151-0316-00
SJ2968H	151-0316-01
SJ3250	151-0470-00
SJ3693	151-0201-00
SJ4208	151-0491-00
SJ6796	151-0454-00
SJ6802	151-0468-00
SJ6807	151-0226-00
SJ6821	151-0291-00
SJ6831	151-0485-00
SJ6841	151-0485-00
SJ6847	151-0275-00
SJ6852	151-0266-00
SJ6911	151-0703-00
SJ6926	151-0747-00
SJ6927	151-0746-00
SJ6930	151-0419-00
SJ2020	151-0140-03
SJ7023	151-0336-00
SJ7024	151-0337-00
SJ7025	151-0487-00
SJ7028	151-0258-00
SJ7032	151-0315-00
SJE016	151-0324-00
SJE327	151-0466-00
SJE347	151-0678-01
SJE349	151-0425-00
SJE362	151-0679-00
SJE371	151-0476-00
SJE374	151-0477-00
SJE375	151-0606-00
SJE376	151-0607-00
SJE377	151-0616-00
SJE378	151-0651-00
SJE379	151-0652-00
SJE380	151-0729-00
SJE389	151-0476-02
SJE410	151-0478-00
SJE412	151-0464-00
SJE419	151-0415-00
SJE484	151-0414-00
SJE790	151-0621-00
SJE794	151-0426-00
SJE795	151-0647-00
SJE797K	151-0465-00
SJE865	151-0324-01
SJE867	151-0423-00
SJE908	151-0311-01
SJE914	151-0334-00
SJE915	151-0324-00
SJE916	151-0323-00
SJE917	151-0335-00
SJE924	151-0349-00
SJE925	151-0373-00
SJE943	151-0405-00
SJE957	151-0429-00
SJE966	151-0436-00
SJE1101	151-0469-00
SJE1648	151-0636-00
SJE1655	151-0349-02
SJE1657	151-0613-00

MFG. PART NO.	TEK PART NO.
SJE1933	151-0632-00
SJE1937	151-0634-00
SJE1946	151-0632-00
SJE1972	151-0656-00
SJE1973	151-0657-00
SJE1977	151-0482-00
SJE1985	151-0497-00
SJE2758	151-0314-00
SJE2914	151-0346-00
SJE2943	151-0433-00
SJE3251	151-0470-00
SJEMJE350	151-0698-00
SJ5J012	151-0429-00
SKA1060	151-0237-00
SKA1103	151-0431-00
SKA3052	151-0254-00
SKA3055	151-0333-00
SKA3056	151-0471-00
SKA3310	151-0219-00
SKA3312	151-0216-00
SKA3418	151-0192-00
SKA3483	151-0220-03
SKA3484	151-0207-00
SKA3487	151-0276-00
SKA3502	151-0254-00
SKA3503	151-0281-00
SKA3701	151-0292-00
SKA3702	151-0188-00
SKA3703	151-0190-00
SKA3704	151-1093-00
SKA3788	151-0641-00
SKA3789	151-1109-00
SKA4504	151-0271-00
SKA4785	151-0224-00
SKA4799	151-0225-00
SKA5122	151-0220-00
SKA5390	151-1042-00
SKA6176	151-0342-00
SKA6177	151-0342-00
SKA6198	151-0327-00
SKA6516	151-0367-00
SKA6664	151-0369-00
SKA6814	151-0402-00
SKA6991	151-0410-00
SKA8001	151-0350-00
SKA8899	151-0444-00
SKB8899	151-0444-00
SKB3334	151-0164-00
SKB5574	151-0198-00
SKM1029	151-0294-00
SKM1103	151-0431-00
SL63 Fmly	151-0142-00
SL63 Fmly	151-0167-00
SL4049	151-0296-00
SL6073A	151-0127-00
SL41341	151-0619-00
SLD3733	151-1142-00
SLD3760	151-1058-00
SLD4217	151-1145-00
SLS363	151-0728-00
SM04	151-0032-00
SM24	151-0027-00
SM483	151-0088-00
SM628	151-0083-00
SM1307	151-0103-00
SM1478	151-0085-00
SM1527	151-0108-01
SM2218	151-0130-00
SM2335	151-0105-00
SM2572	151-0142-00
SM2602	151-0185-00
SM3155	151-0133-00
SM3195	151-0134-00
SM5801	151-0133-00

MFG. PART NO.	TEK PART NO.
SM7706	151-0109-00
SM7744	151-0184-00
SM7745	151-0167-00
SM7769	151-0121-00
SM8138	151-0124-00
SM8138	151-0124-01
SM8138	151-0124-04
SM8183	151-0340-00
SM23007	151-0190-00
SMBR100	151-0662-00
SMBR123	151-0714-00
SMBT1090	151-0704-00
SMBT1105	151-0713-00
SMBT1120	151-0731-00
SMC50249	151-0498-00
SMC50249	151-0498-01
SMC51056	151-0379-00
SMCM321	151-0344-00
SMCM321-1	151-0344-01
SMCM321-2	151-0344-02
SMCM321-2	151-0294-00
SMCM485	151-1023-01
SMCS684	151-0348-00
SMCS1056	151-0379-00
SMCS1058PK	151-0380-00
SMCS2391	151-0649-00
SMCS2673	151-0498-00
SMCS2850	151-0379-02
SMT1014	151-0294-00
SMT1050	151-0293-00
SMT1105	151-0362-00
SMT1501	151-0345-00
SMT5012	151-0625-00
SN5232	151-0155-00
SN8183	151-0340-00
SN63164	151-0301-00
S005835	151-0109-00
S005871	151-0087-00
S006075	151-0127-00
S016223	151-0160-00
S019393	151-0213-00
S020836	151-0222-00
S022650	151-0219-00
S024848	151-0223-00
S024849	151-0221-00
S024850	151-0224-00
S025381	151-0279-00
S032074	151-0096-00
S032308	151-0290-00
S032677	151-0190-00
S032714	151-0270-00
S032790	151-0283-00
S034163	151-0280-00
S035284	151-0325-00
S035928	151-0342-00
S035930	151-0297-00
S035939	151-0347-00
S036228	151-0220-00
S036521	151-0350-00
S036744	151-0250-00
S037880	151-0406-00
S037881	151-0407-00
S038487	151-0302-00
SD38704	151-0437-00
S039035	151-0103-00
S039118	151-0424-00
S039291	151-0225-00
S039404	151-0150-00
S039618	151-0169-00
S039650	151-0458-00
S039651	151-0459-00
S039652	151-0460-00
S039875	151-0471-00
S039988	151-0456-00
S040065	151-0341-00

TRANSISTORS (CONT)

MANUFACTURER PART NUMBER TO TEK PART NUMBER INDEX

9

MFG. PART NO.	TEK PART NO.
S042530	151-0221-02
S042810	151-0327-00
S050151	151-0239-00
S043003	151-0109-01
S050160	151-0227-00
S0508LS3	151-0534-00
S05835	151-0109-00
S00675	151-0127-00
SP569	151-0139-00
SP1398	151-0102-00
SP1805	151-0046-00
SP1806K	151-0060-00
SP1820	151-0165-00
SP1830	151-0002-00
SP1831	151-0101-00
SP2597	151-1083-00
SP8481	151-0104-00
SP9843	151-0139-00
SP9843	151-0139-01
SP10460	151-0633-00
SP10461	151-0644-00
SP12141	151-0232-00
SP12435	151-0267-00
SP13378	151-0309-00
SP13404	151-0307-00
SP13794	151-0467-00
SP14318	151-0232-02
SP21155A	151-0424-02
SPF627	151-1042-00
SPF627M2	151-1042-01
SPF628	151-1045-00
SPF685	151-1005-00
SPF713	151-1097-00
SPF776	151-1066-00
SPF789	151-1059-00
SPF877	151-1039-00
SP08481	151-0104-00
SPS246	151-0221-00
SPS628	151-1045-00
SPS797	151-0444-00
SPS1752	151-0333-00
SPS3319	151-0190-00
SPS3414	151-0390-00
SPS5648	151-0271-00
SPS5956	151-0443-01
SPS5957	151-0325-00
SPS6304	151-0273-00
SPS6700	151-0350-00
SPS6737	151-0331-00
SPS6765	151-0410-00
SPS6866K	151-0199-00
SPS6867K	151-0391-00
SPS6868K	151-0188-00
SPS6897	151-0198-01
SPS6915	151-0220-00
SPS6915	151-0220-03
SPS6916	151-0223-00
SPS6919	151-0341-00
SPS6927	151-0438-00
SPS7545K	151-0195-01
SPS7890	151-0225-00
SPS7950	151-0443-00
SPS7951	151-0347-00
SPS7969	151-0190-00
SPS7972	151-0444-02
SPS8006	151-0199-04
SPS8007	151-0424-00
SPS8007	151-0424-02
SPS8025	151-0276-00
SPS8026	151-0223-00
SPS8203	151-0646-00
SPS8223	151-0712-00
SPS8223-1	151-0712-01
SPS8224	151-0711-00
SPS8226	151-0719-00

MFG. PART NO.	TEK PART NO.
SPS8232	151-0720-00
SPS8236	151-0271-00
SPS8246	151-0424-00
SPS8288	151-0645-00
SPS8317	151-0736-00
SPS8335	151-0435-00
SPS8405	151-0750-00
SPS8467M	151-0221-06
SPS8521	151-0271-03
SPS8530M	151-0225-04
SPS8619	151-0471-00
SPS8800	151-0195-00
SPS8801	151-0192-00
SPS8802-1	151-0198-00
SPS8803	151-0216-00
SR8139	151-0224-00
SR263771	151-0270-00
SRF478	151-0283-00
SRF501	151-0441-00
SRF502	151-0447-00
SRF503	151-0451-00
SRF504	151-0448-00
SRF505	151-0442-00
SRF507	151-0450-00
SRF518	151-0212-00
SRF529	151-0211-00
SRF572	151-0461-00
SRF709	151-0411-00
SRF774	151-0277-00
SRF2074	153-0615-00
SRF2103	151-0267-00
SRF2262	151-0474-01
SRF2320	151-0446-00
SRF2502	151-0338-00
SRF2625	151-0282-00
SRF3188	151-0752-00
SRF55037	151-1005-00
SRFMRF5175	151-0695-00
SS62	151-0205-00
SS84K	151-0188-01
SS106	151-0289-00
SS443	151-0296-00
SS765	151-0220-00
SS1489	151-0322-00
SS1945	151-0131-01
SS2025	151-0202-00
SS2110	151-0193-00
SS2455	151-0310-02
SS2456	151-0407-00
SS2590	151-0061-00
SS2738	151-0272-00
SS2821	151-0279-00
SS2843	151-0279-01
SS3598	151-1002-00
SS3716	153-0559-00
SS3918	151-0285-00
SS3918H	151-0285-02
SS4157	151-0298-00
SS4353	151-0235-00
SS5917	151-0389-00
SS6748	151-0108-00
SS7144	151-0434-00
SS7394	151-0274-00
SS8065	151-0280-00
SSC1096	151-0287-00
SSC2738	151-0272-00
SSD3691	151-1082-00
ST64	151-0186-00
ST514	151-0214-00
ST613	151-0297-00
ST657	151-0150-00
ST830	151-0169-00
ST830H	151-0169-01
ST898	151-0301-00
ST899	151-0302-00

MFG. PART NO.	TEK PART NO.
ST976	151-0279-00
ST1010K	151-0127-00
ST1011	151-0190-06
ST1046	151-0126-00
ST1060	151-0655-00
ST1068	151-0459-00
ST1071	151-0655-00
ST1083	151-0260-00
ST1096	151-0458-00
ST1149	151-0260-02
ST1283	151-0133-03
ST1330	151-0121-01
ST1366H	151-0150-03
ST1390H	151-0280-01
ST1403H	151-0279-04
ST1440H	151-0183-00
ST1440H	151-0183-01
ST1512	151-0183-00
ST1862	151-0228-00
ST05071	151-0254-00
ST7313	151-0118-00
ST8124	151-0087-00
ST16005	151-0347-00
ST16019	151-0624-00
ST20182	151-0301-00
ST21125	151-0223-00
ST21137	151-0424-00
ST21155A	151-0424-02
ST23057	151-0190-00
ST2N3904	151-0190-03
ST27123	151-0195-00
ST28233	151-0319-00
ST30032	151-0270-00
ST43102B	151-0427-00
ST43112	151-0259-00
ST43112B	151-0259-00
ST43121	151-0225-00
ST43122	151-0471-00
ST59011	151-0274-00
ST62355	151-0453-00
ST62392	151-0342-00
ST65028H	151-0221-00
ST65031	151-0325-00
ST65038	151-0199-00
ST65057	151-0199-00
ST65059	151-0199-04
ST66012	151-0220-00
ST89192	151-0124-00
ST89358	151-0183-00
STA6045	151-0491-00
STA8059	151-0319-00
STA8105	151-0150-00
STA9315	151-0368-00
STC4948	151-0140-00
STC8926	151-0413-00
STC9042	151-0487-00
STD1102	151-0319-00
STJ1030	151-0227-00
ST05071	151-0254-00
ST07391	151-0432-00
ST07546	151-0341-00
ST07580	151-0157-00
STP3000	151-1141-00
STP3001	151-1147-00
STP3002	151-1152-00
SU249K	151-0510-00
SU309	151-0504-01
SU2080	151-1003-00
WU2095	151-1003-00
SU2115	151-1010-00
SU2154	151-1009-00
SU2181	151-1013-00
SU2235	151-1019-00
SU2240	151-1029-00
SU2327	151-1031-00

MFG. PART NO.	TEK PART NO.
SU2328	151-1027-00
SU2346	151-1011-00
SU2351	151-1036-00
SU2388	151-1046-00
SU2390	151-1044-00
SU2394	151-1047-00
SU2404	151-1041-00
SU2409	151-1049-00
SU2438	151-1032-00
SU2443	151-1057-00
SWC2422	151-0270-00
SWC6175	151-0260-00
SWD3317	151-0260-02
SWD3382	151-0613-00
SZ50601	151-0122-00
T116A	151-0278-00
T1425	151-0410-00
T1483	151-0056-00
T1484	151-0098-00
T1495	151-0082-00
T1943	151-0073-00
T2040	151-0061-00
T4731	151-0435-01
T65028A	151-0221-00
TA1075	151-0104-00
TD702	151-0361-00
TE23652	151-0190-01
TE23652	151-0190-04
TE23684	151-0190-00
TE23704	151-0427-00
TIP29	151-0399-00
TIP29C	151-0402-01
TIP29C	151-0464-00
TIP30	151-0387-00
TIP30	151-0388-00
TIP30C	151-0462-00
TIP31A	151-0478-00
TIP31C	151-0476-00
TIP32C	151-0482-00
TIP33	151-0386-00
TIP33A	151-0394-00
TIP33C	151-0660-00
TIP34	151-0370-00
TIP35A	151-0477-00
TIP35C	151-0652-00
TIP36A	151-0616-00
TIP36C	151-0651-00
TIP47	151-0497-00
TIP50	151-0423-00
TIP50	151-0423-01
TIP50	151-0423-02
TIP52	151-0623-00
TIP120	151-0675-00
TIP142	151-0606-00
TIP147	151-0607-00
TIP484	151-0098-00
TIP495	151-0082-00
TM10941	151-0136-02
TM80006	151-0411-00
TN4258	151-0327-00
TPS6521	151-0192-02
TR08	151-0033-00
TX671	151-0216-00
U274A	151-1001-00
U274 Fmly	151-1001-01
U431	151-1102-00
U1490E	151-1005-00
U1491E	151-1006-00
U1634	151-1014-00
U1635	151-1015-00
U1636	151-1016-00
U1863E	151-1026-00
U1908	151-1028-00
U14064	151-0263-00
U2172E	151-1025-00

TRANSISTORS (CONT)

MANUFACTURER PART NUMBER TO TEK PART NUMBER INDEX

MFG. PART NO.	TEK PART NO.
U2313	151-1022-00
U2314	151-1021-00
U2690	151-1042-00
U2783E	151-1059-00
U2881E	151-1004-00
U2882E	151-1005-00
U2883E	151-1006-00
U2884E	151-1025-00
U2884J	151-1025-00
U2885E	151-1042-00
U2885J	151-1042-00
U2895E	151-1026-00
U2896E	151-1059-00
U310	151-1148-00
U3374	151-1070-00
U3374RR	151-1070-00
UC400 Fmly	151-1048-00
D/UC400 Fmly	151-1072-00
UN480A	151-1027-00
UN5017	151-1011-00
UPTB5008	151-0708-00
U2TA508	151-0535-00
U2TA508	151-0699-00
V327	151-0295-00
V34-4203	151-0622-00
V871 (1)	151-0230-00
VA1006	151-1108-00
VF12-VNZ	151-1119-00
VM1009	151-1108-00
VMVM1024	151-1108-00
VMP22	151-1108-00
VN3	151-1121-00
VN02	151-1150-00
VN12	151-1130-00
VN1207N2	151-1130-00
VN99AK	151-1108-00
VN0106N3Z	151-1121-00
VN12007NE	151-1119-00
VN12A4T5	151-1130-00
VN02	151-1127-00
VP11	151-1128-00
VP0106N3	151-1120-00
WD212	151-1069-00
WN537	151-1026-00
WN744	151-1084-00
X13B684	151-0517-00
X13T520	151-0508-00
X16A2070	151-0166-00
X16A2522-1	151-0153-00
X16A2522-2	151-0154-00
X16A2522-3	151-0155-00
X16E3616	151-0273-00
X16G1611	151-0175-00
X16G2525	151-0175-00
X16P4039	151-0281-00
X16X2069	151-0179-00
X32C4755	151-0328-00
X32D6191	151-0207-00
X32E3891	151-0159-00
X38D6191	151-0207-00
X3818218	151-0281-01
X38L3118	151-0254-00
X38H74934	151-0645-00
X39C2760	151-0435-00
X39H2999	151-0220-03
X40C115	151-0331-00
X40E602	151-0439-01
X40E658	151-0439-00
X40K374	151-0496-00
X41E263	151-0440-00
X41E603	151-0440-00
X41E617	151-0463-00
X42C182	151-0365-00
X43C181	151-0364-00
X44C282	151-0352-00

MFG. PART NO.	TEK PART NO.
X44C388	151-0473-00
X44C672	151-0743-00
X44H242	151-0426-00
X44H298	151-0426-01
X44H383	151-0621-00
X44T211	151-0358-00
X45C277	151-0366-00
XA22BCP0219	151-0219-00
XA38B0P0188	151-0188-00
XD11BCP0207	151-0207-00
XSD226CM/CK	151-1138-00
XSD226	151-1138-00
ZTX314	151-0445-00
ZTX320	151-0421-00
1S017	151-1103-00
2BFW030	151-0303-00
2BFW1036	151-1036-01
2C5179	151-0751-00
2N5461	151-1109-00
2S301	151-0191-00
2SA527	151-0305-00
2SA636	151-0666-00
2SA639S	151-0672-00
2SA671C	151-0688-00
2SA706	151-0600-00
2SA733	151-0665-00
2SA756	151-0306-00
2SA772	151-0687-00
2SA772	151-1095-00
2SA884	151-0670-00
2SA896	151-0642-00
2SA1006B-R/Q	151-0696-00
2SA1006B	151-0696-00
2SA1077G	151-0745-00
2SC2336B-R/Q	151-0697-00
2SC288A	151-0206-00
2SC318A	151-0304-00
2SC318A	151-0304-01
2SC402	151-0376-00
2SC403C	151-0375-00
2SC403C	151-0683-00
2SC515A	151-0286-00
2SC634A	151-0684-00
2SC642A	151-0355-00
2SC756	151-0231-00
2SC756	151-0231-01
2SC805	151-0233-00
2SC805	151-0234-00
2SC922	151-1096-00
2SC926A	151-0677-00
2SC1012A	151-0403-00
2SC1124	151-0499-00
2SC1173	151-0480-00
2SC1217	151-0274-00
2SC1252	151-0650-00
2SC1260	151-0230-00
2SC12795	151-0673-00
2SC1364	151-1087-00
2SC1424	151-0212-00
2SC1474	151-0686-00
2SC1475	151-0685-00
2SC1475	151-0601-00
2SC1630	151-0489-00
2SC1674	151-0611-00
2SC1762-1	151-0667-00
2SC1811	151-0643-00
2SC1811	151-0668-00
2SC1816	151-0669-00
2SC1951	151-0702-00
2SC1983	151-0671-00
2SC2333L	151-0423-00
2SC2336B	151-0697-00
2SC2527G	151-0701-00
2SD28	151-0229-00
2SD291	151-0356-00

MFG. PART NO.	TEK PART NO.
2SD313D	151-0476-02
2SD316	151-0374-00
2SD348	151-0449-00
2SD416	151-0449-00
2SD743A-R/S	151-0464-00
2SD525-O/R	151-0464-00
2SK18A	151-1116-00
2SK23A	151-1092-00
3N138	151-1030-00
3N140	151-1040-00
320C113H12	151-0319-00
320C196H21	151-0209-00
32S6844	151-0221-00
32S7475	151-0190-00
32S7502	151-0333-00
32S8421	151-0190-00
62460	151-1055-00
62SMW	151-0525-00
68H01	151-0111-00
68H02	151-0111-00
84SE105	151-0239-00
91AJ133	151-0226-00
91AJ153	151-0149-00
92PU01A	151-0710-00
92PU45A Fmly	151-0716-00
92PU51A	151-0622-00
93SX287	151-0337-00
93SX288	151-0336-00
49SX6258	151-0413-00
21/69	151-0085-00
355	151-0501-00
356	151-0502-00
12E1482	151-0232-00
151-07	151-0111-00
152-07	151-0110-00
3539	151-1032-00
3550	151-1029-00
3687	151-0045-00
4209	151-0467-00
4504	151-0271-02
34080	151-0137-00
34663	151-0096-00
35098	151-0138-00
35495	151-0136-00
36568	151-0140-00
36872	151-0150-00
37669	151-0209-00
37768	151-0211-00
37794	151-0208-02
37981	151-0218-00
39224	151-0251-00
39539	151-0148-00
39570	151-0277-00
39625	151-0241-00
39626	151-0210-00
39637	151-0217-00
39801	151-0315-00
40232	151-0157-00
40235	151-0180-00
40242	151-0181-00
40250 Fmly	151-0148-00
40250 Fmly	151-0148-01
40250 Fmly	151-0148-02
40250	151-0217-00
40251 Fmly	151-0141-00
40251 Fmly	151-0179-01
40264 Fmly	151-0168-00
40327-17	151-0253-00
40C10B	151-0512-00
412022	151-0164-00
41632BD	151-0269-00
60010	151-0149-00
60069	151-0275-00
60156	151-0291-00
60157	151-0299-00

MFG. PART NO.	TEK PART NO.
60418	151-0316-00
60580	151-0141-00
60794	151-0211-01
61030	151-0040-00
61333	151-0072-00
61442	151-0336-00
61443	151-0337-00
61577	151-0368-00
61654	151-0363-00
62396	151-0262-00
62460	151-1055-00
64272	151-0446-00
64520	151-0136-02
64562	151-0260-00
64733	151-0505-00
65128	151-0451-00
65130	151-0441-00
65349	151-0208-00
65835	151-0169-00
67464	151-0136-03
68303	151-0603-00
68343	151-0462-00
68430	151-0476-00
68478	151-0514-01
685343	151-0512-00
70106-1	151-0133-01
94-0102	151-1136-00
940109	151-1141-00
3035930	151-0297-00
4032717	151-0253-00
45SX550	151-0140-00
71520-03	151-0191-00
7299716	151-0158-00
7305762	151-0256-00
7931342	151-0314-00
7934938	151-0266-00
9342820	151-0468-00
17230610	151-0319-00
150340900	151-0653-00
507C768H01	151-0111-00
507C768H02	151-0110-00

9

NOTES

9

COST CODE

(CC COLUMN)

CODE	A	B	C	D	E	F	G	H	I	J	K	L	M	N	O
≈ VALUE with +	.75¢	2¢	3.75¢	6¢	10¢	18¢	35¢	60¢	$1	$2	$3.75	$6	$10	$18	$35+
≈ VALUE no suffix	.5¢	1.5¢	3¢	5¢	8¢	15¢	25¢	50¢	75¢	$1.50	$3	$5	$8	$15	$25
≈ VALUE with -	.2¢	1.25¢	2.5¢	4.25¢	7¢	13¢	22¢	40¢	65¢	$1.25	$2.50	$4.25	$7	$13	$22

NOTE: Costs may vary from order to order due to order quantities, vendor, etc.

RELIABILITY NOTES

COMPONENT RELIABILITY DATA: CAUTION!

The Component reliability data listed in this catalog are compiled from Tek field failure data. As such, they represent historical information based on many different instrument applications and environments. Using a part with a particular rate does not guarantee that the part will exhibit that rate in the circuit. This is due to the dependence of the failure rate on application stress (voltage, current, temperature, mechanical stresses) and other factors which may determine the part failure rate to an even greater extent than application stress. Some of these factors are:

1. Dependence on typical or unspecified parameters for proper circuit operation.
2. Circuit characterization which did not anticipate component parameter distribution or account for variations in performances at high or low temperatures.
3. Effects of thermomechanical cycling stress, such as in a sweep circuit.
4. Safe operating area-second breakdown phenomena.
5. Susceptibility to burn-out by transients.
6. User-induced failure.
7. Poor maintenance technizues.

One might ask: Of what value is this reliability data? It is a comparative indicator of Tek's experience with that component. Parts having experience failure rates greatly different from the generic rates should trigger some questions about their use in new applications. For example, is there evidence the part has been misapplied or occasionally suffered abuse? Have the suppliers had difficulty making the part? Does the new application stress the parts to the same degree as earlier applications? Component Engineering or Component Reliability Engineering can assist in answering such questions. The value of the data is as a flag indicating we have experienced some kind of reliability problem with that part in the past.

HOW FAILURE RATES DEPEND ON APPLIED STRESS

Semiconductors

Models have been developed to represent, in a heuristic manner, the dependence of semiconductor failure rates on voltage and temperature stress. These models are based on the Arrhenius equation which for a physical process, describes the process rate dependence on temperature:

$$R = R_o \exp - \frac{E_A}{kT_K}$$

where R = reaction rate
R_o = a constant
E_A = activation energy in eV
k = Boltzmann's constant (8.6×10^{-5} eV/K)
T_K = absolute temperature in Kelvin

Thus, the acceleration factor (AF) for the failure rate is:

$$AF = \exp \frac{E_A}{k} \left[\frac{1}{T_1} - \frac{1}{T_2} \right]$$

Where T_1 is the test temperature (or a reference temperature) and T_2 is the desired temperature in degrees Kelvin. Figure 1 shows this factor normalized to the failure rate at 60°C junction temperature. Also shown is the effect of voltage stress (MIL-HDBK-217B model for bipolar transistors only.) Voltage stress ratio is defined as the ratio of operating V_{CE} to rated V_{CE}.

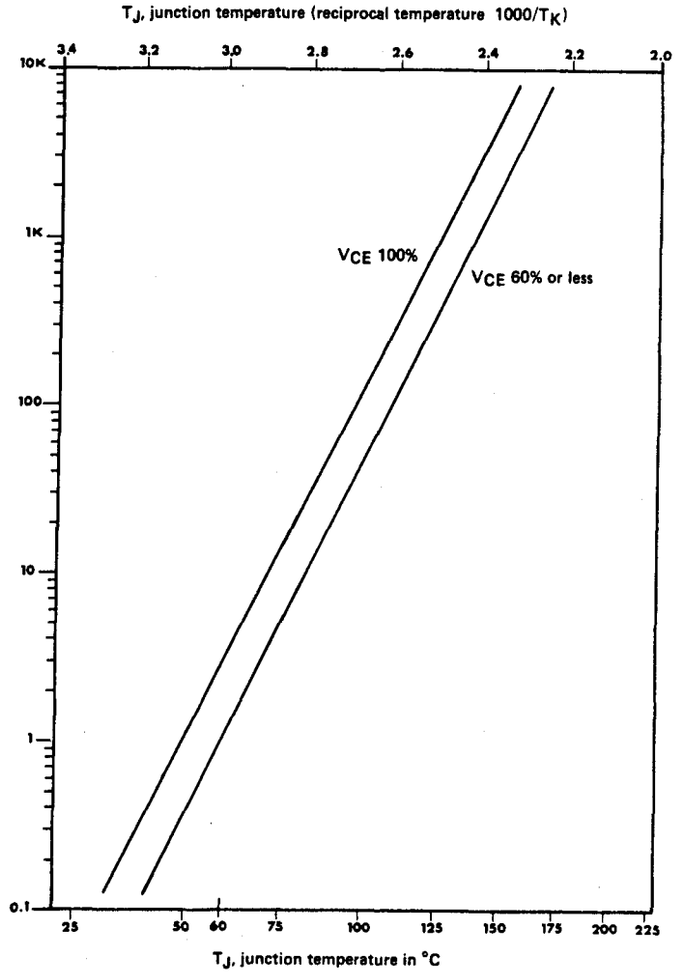

Figure 1 - Failure rate acceleration factors normalized to a failure rate of 1 at 60°C junction temperature. Effects of transistor voltage stress are indicated by the two lines for 100% and 60% voltage stress levels. For microcircuit acceleration factors, use the 60% line.

GENERIC FAILURE RATE DATA

	%/Warranty Year Tek Experience
Transistors, Bipolar	
Power	.05
Small Signal-PNP/NPN	.02
Transistors, JFET and MOSFET	.08
SCR/Triac/Unijunction	.08

IN ADDITION TO THE GENERIC FAILURE RATE DATA LISTED HERE, THIS SECTION LISTS THE EXPERIENCED FAILURE RATE DATA FOR MANY OF THE INDIVIDUAL PARTS.

†† CATALOG RELIABILITY CODES

USAGE/YR	CODE
≥10	1
≥100	2
≥1 000	3
≥10 000	4
≥100 000	5
≥1 000 000	6
≥10 000 000	7

FAILURE FREQ	CODE		%/YR (median)
1/100 000	A	=	.001
1/50 000	B	=	.002
1/20 000	C	=	.005
1/10 000	D	=	.01
1/5 000	E	=	.02
1/2 000	F	=	.05
1/1 000	G	=	.1
1/500	H	=	.2
1/200	I	=	.5
1/100	J	=	1.0+

RELIABILITY NOTES

Reliability screening for semiconductor devices

9

When is it recommended?

Distributions

Semiconductor parameters such as leakage currents, breakdown voltages, current gain, threshold voltage, junction capacitances usually are found to be distributed normally (also called Gaussian) if a significant sample is tested.

What about the life of a semiconductor device? Some say that the life is unlimited. However, let's hypothesize that life is a measurable parameter just as any electrical parameter. Would it not be reasonable to expect the life of a semiconductor device to also have a normal distribution?

Semiconductor Life Distributions

Experiments have shown that the lives of semiconductors (for a constant junction temperature) are normally distributed as shown in Figure 1. Notice the horizontal scale is the log of time---not a linear function of time.

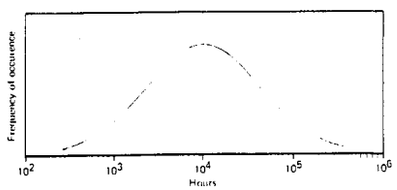

FIG 1 Life distribution of a typical part (Test temperature of 150°C T_J) Median life = 10^4 hours Standard deviation = 1.5

Multiple Distributions

In the course of some experiments to determine semiconductor device life, multiple distributions are often found (see Figure 2). The secondary distribution that occurs earlier than the main distribution is sometimes called a "freak" distribution when the failure mechanism is the same as failures from the main distribution.

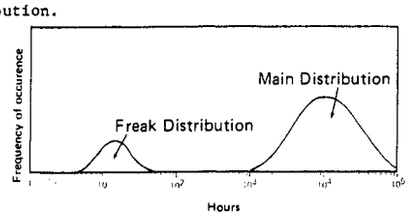

FIG 2

Log Normal Distribution

Accelerated life testing is used in order to obtain the necessary data for the log-normal distribution (i.e. the median life and the standard deviation).

In order to establish the presence and position of the freak and main distributions, tests must be continued until approximately 50% of the units on test fail (failure is defined as not complying with the part specification). This means that life tests are usually performed at or above the maximum junction temperature referred to in the specification. For example, transistor life tests are usually between 150 and 250°C.

Once the median life and standard deviation is found at an elevated temperature, the projected failure rate in a normal use condition can be derived (see Component News No. 236). This projected failure rate can be used to compare the reliability of several vendors or to indicate what benefits would accrue from screening (burn-in).

Application to Part Screening

Component reliability screening can be of significant benefit when:

1. The part type in question has been found by life testing to have a significant freak proportion (over 1%) and,

2. the application calls for junction temperatures of about 75°C or higher (at 25° C ambient), or when,

3. lowest possible failure rates are needed (out to 10,000 or more hours of instrument operation).

The reason for this is that the freak population is responsible for determining the component failure rate (except for application voltage overstress or user abuse) during the bulk of the instrument useful life. Figure 3 illustrates a typical transistor (151-0103-00, vendor T) failure rate curve for two different junction temperatures. Results are also applicable to the 151-0302-00 because the same chip is used in both part types.

Accelerated life tests showed that those parts had a "freak" population of about 5% of the sample with a freak median life of 20 hours. The main population had a median life of 900 hours at the test temperature (245°C)

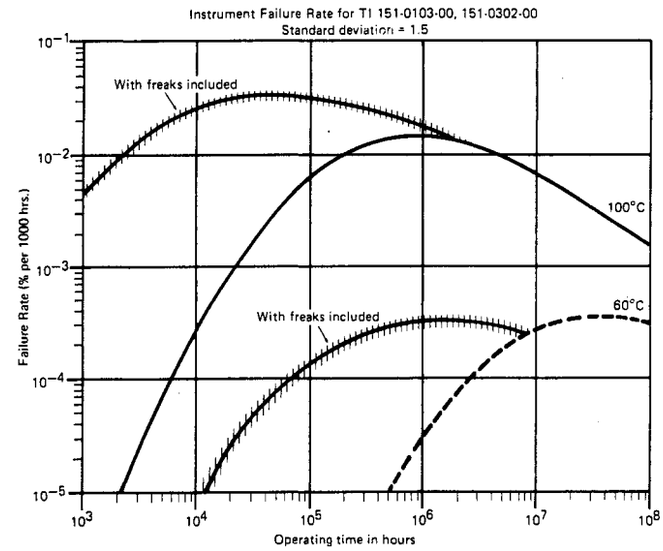

Note the effect of removing the freaks becomes significant only at the higher junction temperature because the useful life of most Tek instruments is probably only about 20,000 hours of actual use (except for TV products which may be up to 100,000 hours). To remove the freaks, a high temperature burn-in is necessary.

Summary

Component Reliability Engineering can, by using accelerated life tests techniques:

1. Determine whether any significant reliability performance difference exists among vendors in order to qualify vendors with higher reliability (and disqualify those with inferior reliability) or merely to provide a reliability related input to a vendor rating system.

2. Identify the proportion of infant mortality or "freak" devices existing in lots of a particular part so that the positive effects of screening out those weak parts can be estimated and cost-benefit trade-offs measured.

3. Estimate the expected in-use failure rates so that application problems may be identified more easily.

4. Determine the inherent part reliability so that requirements reflecting this level may be added to part specifications and provisions added for lot reliability acceptance tests at incoming inspection.

High reliability versions of many Tek part numbered transistors already exist. If your application may benefit from use of these parts, contact Component Reliability Eng. Ext 1605 for further information.

Safe operating area and second breakdown

Bipolar transistors are known to experience a failure mode called "secondary breakdown" even though the operating currents and voltages are well within the permissible limits set by thermal dissipation requirements.

It is essential that all necessary information regarding this failure mode be understood so that circuits may be designed to avoid such failures.

The object of this article is to give important *and reliable "rules of thumb" that will facilitate* proper designs, and to guide the designer to sources of information on the subject.

Definition of terms

If there is a secondary breakdown, obviously there must be a primary breakdown. Actually, transistors exhibit several modes of breakdown and while there are various interpretations, a consensus does prevail.

Figure 1 shows the breakdown characteristics of a typical transistor. In addition to those shown, other ratings exist (BV_{CES}, BV_{CER} and BV_{CEX}) but they all fall somewhere between BV_{CEO} and BV_{CBO}.

As shown, **secondary breakdown** results in a collapse of the device's voltage sustaining abilities with the accompanying sharp rise in collector current. This usually results in permanent damage -- almost always a collector-to-emitter short. (The mechanism of this failure mode will be discussed at the end of this article.)

Transistor manufacturers have dealt with this breakdown problem since about 1958 by publishing ratings for each type of device. These ratings are commonly referred to as **"Safe Operating Area Ratings"** or SOAR.

Figure 1 Breakdown characteristics of a typical transistor.

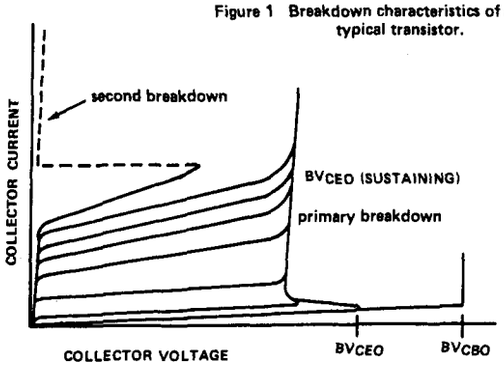

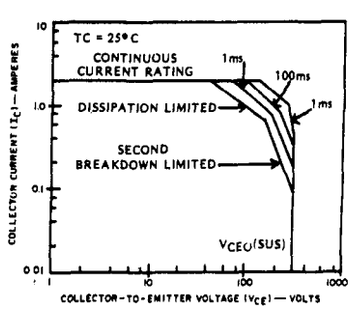

Figure 2 A typical safe-operating-area curve.

SOA ratings

(I recently received a data sheet from Toshiba of Japan in which they refer to an "Area of Safe Operation" or ASO – presumably pronounced "Ah-so.")

SOA ratings are in graphic form. A typical curve is shown in Figure 2. Note that ratings are energy-related involving voltage, current, time and temperature.

All power transistors and many small signal transistors have SOA ratings. Some manufacturers publish a graph outlining voltage, current and time *limitations while others show a second graph plot*ted at an elevated temperature such as 100°C.

The manufacturers therefore guarantee their devices to survive as long as they are operated within their ratings. One would conclude then that it is impossible to properly design a circuit without referring to a SOA graph.

Manufacturing processes and SOA ratings

Another important point to remember is that almost all bipolar transistors are made using four basic processes. These are:

1. Single diffused, homogeneous base (hometaxial base)
2. Single diffused, epitaxial base (epi-base)
3. Double diffused, epitaxial (epi-collector)
4. Triple diffused

Each of these processes has distinct characteristics and SOA ratings. It is desirable to be able to associate a particular transistor with its process family.

Once the trade-offs between each process type *are understood, proper device selection is made* much simplier. Figure 3 gives a brief comparison of the four processes.

SOA ratings and f_t

Notice that there is a direct relationship between SOA and f_t. As a rule, as the f_t goes up, the SOA goes down.

It is also true that there are generally rather large differences between SOA groups and small differences between different parts within a group. Since this is also true of f_t, a good indicator of a device's process is its f_t.

An exception to this rule would be an epi-base part and a triple diffused device. The devices might both have an f_t of 4 MHz, but the triple diffusion process is used almost exclusively for devices re*quiring breakdown voltages greater than 200. Thus,* the clue would be the voltage rating.

Specification problems

Not only is it sometimes difficult to identify a part's manufacturing process, but sometimes the manufacturer will purposely omit the information. It's a matter of being engaged in "specsmanship" to minimize the SOA rating differences between com*petitors. A couple of examples –*

Many applications require a large SOA. Here single diffused parts are best. Texas Instruments does not manufacture parts by this process. They do make epi-base, and since epi-base requires only one diffusion step and runs a close second in SOA, TI calls it "single diffused." Very clever.

In another example, TI makes a broad range of plastic (TO-220) complementary pairs – TIP *29/30, TIP 31/32 etc. So does GE – D40, 41, 42,* etc. In many cases their parts have identical voltage, current and power ratings.

However, GE makes only double diffused, epi-collector parts. So, when GE is after business in competition with TI, they don't talk about SOA. But, if you check out their f_t, you would find about 50 MHz versus 4 MHz for TI's devices. On the other hand, if you're looking for fast switching, the tables turn.

Another game the manufacturers play is with the SOA graphs. Here, the more rectangular the shape, the better. To get a good-looking graph, the manufacturers use different scaling factors. Sometimes you have to look twice to detect the rather rapid derating.

Figure 4 shows graphs for each of the four process types. Notice the scaling factors. Since these were all drawn from the RCA Power Data Book, they don't show as much exaggeration as some graphs.

Figure 3 BIPOLAR MANUFACTURING PROCESSES

	Single diffused	Epitaxial Base	Double diffused, Epitaxial	Triple diffused
Current rating (amps)	5 to 30	1 to 50	1 to 50	1 to 30
Voltage rating (volts)	40 - 160	40 - 120	40 - 200	2000
Switching speed (f_t)	0.8 MHz typical	1 to 4 MHz	15 to 100 MHz	2 to 5 MHz
SOAR	very best	next best	poorest	good
Advantages	rugged	NPN – PNP complements, wide variety	very fast, NPN – PNP	medium speed, high voltage
Disadvantages	NPN only, slow	limited in voltage	poor SOAR	mostly NPN
Cost vs. Power	*low*	*low*	*high*	*medium*

Figure 4 **SOA ratings and manufacturing processes**

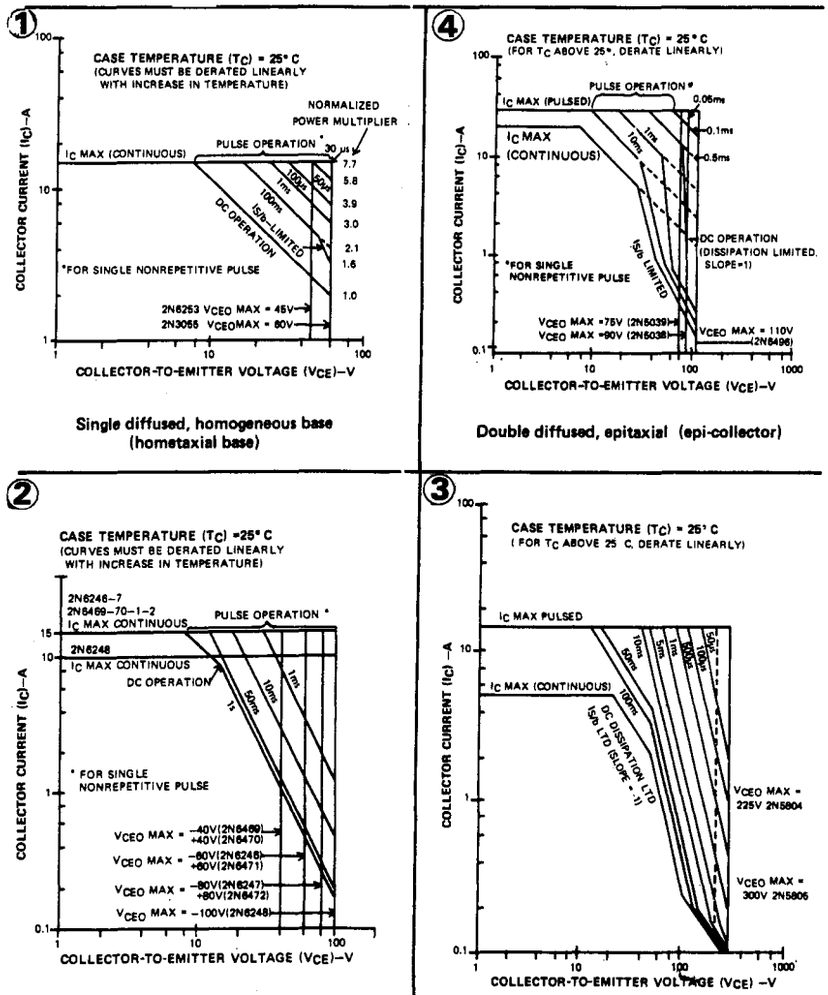

Second breakdown

As I mentioned earlier, second breakdown has been under investigation since 1958. The amount of material on the subject is truly voluminous.

However, as incredible as it may seem, after so many years of investigation, this phenomena is still not fully understood and cannot be predicted by device design calculations.

Note – Just prior to writing this article, I contacted transistor designers at Motorola, TI, and Solitron for update information. The most recent paper published on the subject is in the October 1974 edition of **IEEE Transactions on Electron Devices** (Ed. 21, No. 10). The author is Phillip Hower of Westinghouse.

The two most important facts concerning second breakdown are that:

1. A device's power-handling capability decreases with increased collector-to-emitter voltage, and
2. Resistance to second breakdown is highly dependent on base thickness – the thicker the base, the more rugged the device.

Since base thickness is a fundamental factor controlling f_t, we see a direct relationship between SOA ratings and f_t.

Until Hower's report, everyone tried to explain second breakdown in the terms of "current crowding" which is present in transistors when the base current flowing laterally causes de-biasing near the center of the emitter. See Figure 5.

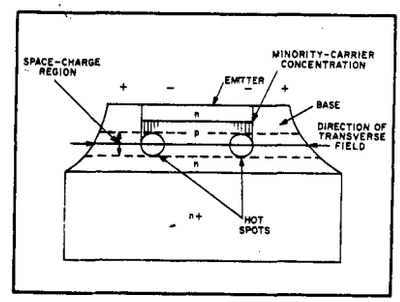

Figure 5 Diagram illustrating current crowding.

This focusing of current does cause hot spots but the fact is that second breakdown can and does occur at low collector currents where there is no appreciable current crowding. The paradox is that the techniques used to promote current spreading (such as emitter ballasting) do improve resistance to second breakdown.

Another explanation of second breakdown is that at high collector voltages, the base is partially depleted, thus reducing its effective thickness. The problem here is that in single-diffused transistors the V_{CE} is supported almost entirely in the base, which depletes very deeply (at BV_{CEO} to zero width). But, these happen to be the parts that have the highest SOA ratings.

The fact that second breakdown is mostly a voltage-dependent phenomena is also seen when one notices that transistors with breakdown ratings of over 250 volts, or so, all have maximum SOA current ratings of about 200 mA, regardless of the geometry or size.

Concluding remarks

To summarize, all manufacturers are using the techniques learned over the past 17 years and are nearly equal in their proficiency to produce state-of-the-art devices.

I'm told that our suppliers usually build a part and then test it, sometimes destroying the device to arrive at an SOA rating. Therefore, it is much more important to select the right device process family than the particular manufacturer.

And, again, it is **essential** that a circuit designer refer to the SOA graph to complete a reliable design.

FOOTNOTE: **reverse bias second breakdown**

In the text above I have dealt with what is commonly referred to as "forward bias second breakdown." There is another phenomena known as "**reverse bias second breakdown.**" The two terms should not be confused.

There are operating conditions in certain circuits that subject a transistor to high V_{CE} and I_C simultaneously, with a reverse bias on the base.

Such a condition would be an inductive load in the collector circuit where a current is flowing due to forward base drive and then that drive is abruptly reversed. As the transistor turns off, the collector voltage rises until the transistor breaks down. The whole of the energy stored in the inductor must then be absorbed by the transistor.

The reverse bias SOA rating is given in joules. This rating is not always listed in transistor specs, especially if the device is weak. But here again, devices can be divided by process family and the same rules will apply as in the case of forward bias SOA.

For further information contact Jim Williamson, Component Engineering , 78-557, Ext 2552

APPLICATION NOTES

DESOLDERING TOOLS-STATIC CHARGE

TOOL	CHARGE LEVEL RETAINED ON TOOL	
	Immediate charge	Charge after time
Silverstat Soldapullt	0V	0V After five minutes
Deluxe Soldapullt	3kV	300-400V After five minutes
Standard Soldapullt	20kV	10kV After five minutes
Bulb Solder Sucker	10kV	4kV After five minutes
Solder-Wick	*2kV	0V After one minute

*Charge was retained due to solder-wick's plastic reel

Some circuit board components are sensitive to static charge. Also, some desoldering tools create a static charge. In order to identify and preclude potential problems, we have tested the various desoldering tools available for use at Tek.

A circuit board was used, with components removed, to determine static levels. Each device was tested ten times. The desoldering tools were checked for immediate charge retention and for the charge held after five minutes.

Each of the tools except the Silverstat Soldapullt, left a static charge on the circuit board and retained a charge (see chart). The Silverstat Soldapullt, a model with a metallized surface, left no charge and also retained no charge. Therefore, it is the preferred tool. It has been assigned part number 003-0795-00.

For more information on these desoldering tools, contact Herb Zajac, ext. 4759.

Handling precautions for TO-220's

We all know that electrical stresses must be maintained within specified limits to assure reliable performance and long device life. What we often neglect to recognize though is that the limitation of mechanical stresses during handling and mounting of devices is equally important to reliable field performance.

GE presents the following recommendations for the handling of TO-220 plastic power pacs. These suggestions apply to all vendor's devices.

lead forming and bending

1. point of bend ≥ 1/8" from plastic package
2. *provide stress relief between bending point* and package during bending
3. do not allow stress-relief tool to contact the plastic part of the package
4. avoid repeated bendings

screw mounting of device

1. maximum screw size: UNF 4-40 or Metric M3
2. screw head: Phillips or hex socket head cap preferred so mounting tool does not contact or press against the plastic part of the package
3. a flat round or rectangular washer against the top of the device flange is recommended to spread the mounting force – Washer dimensions must be such that it does not contact the plastic part of the package
4. lubricate screw threads and top of device flange around mounting hole with thermal compound
5. maximum mounting torque: ≤ 6 in-lbs.
6. if a minimum interface thermal impedance is important, observe the following:
   a. minimum mounting torque: 3 in-lbs.
   b. use thermal compound such as GE642

mounting surface type and preparation

1. flatness: ≤ .002 in/inch
2. maximum diameter of hole: ≤ .140 inch – This must include any countersinking, chamfering or cupping around hole
3. edge of hole must be clean with no burrs or ridges

possible damage

Damage to these devices from improper handling and/or mounting manifests itself as excessive current leakage or an electrical short in the device's principle current path.

For further discussions related to mounting practices as they affect interface thermal impedances, reference GE application note 200.55 entitled "Handling and Thermal Considerations for GE Plastic Power Devices."

Contact Jim Williamson, Component Engineering, 78-557, Ext. 2552 for more information.

APPLICATION NOTES

9

Storage Times and Saturation Voltages

The data in this table was obtained by averaging the saturation voltages and switching times taken from 10 transistors of each type tested in the circuit shown. The values are not intended to be used as design values, but rather as a basis for comparison between different transistor types.

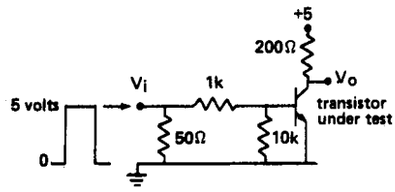

NPN (151-'s)	Storage Time (nsec)	Saturation voltage (volts)	Cost code
-0223-	13.2	0.122	E-
-0424-	17.0	0.106	E
-0127-	17.5	0.112	G-
-0225-	106.4	0.107	E+
-0190-	414.0	0.0394	D+
-0302-	658.0	0.0326	F-
-0192-	689.0	0.0298	E
-0341-	1082.	0.0607	D+
PNP (151-'s)			
-0325-	35.3	0.092	E
-0221-	83.9	0.096	E
-0188-	287.	0.0506	D+
-0220-	294.	0.0413	E
-0216-	610.	0.0768	E+
-0342-	711.	0.0729	E-
-0410-	935.	0.0505	E

STATIC SENSITIVE

HANDLING OF STATIC SENSITIVE COMPONENTS

MOST SEMICONDUCTOR PART TYPES, BOTH SEPARATELY AND IN ASSEMBLIES, HAVE BEEN FOUND TO BE SUSCEPTIBLE TO DAMAGE AT VOLTAGE LEVELS COMMONLY FOUND IN MANUFACTURING ENVIRONMENTS. THE SIMULATED STATIC DISCHARGE TESTS SHOWED THE FOLLOWING CATEGORIES TO BE ESPECIALLY SUSCEPTIBLE:

CATEGORIES	RELATIVE DEGRADATION LEVEL[1]
MOS OR CMOS MICROCIRCUITS OR DISCRETES OR LINEAR MICROCIRCUITS WITH MOS INPUTS	100 - 500
ECL	200 - 500
SCHOTTKY SIGNAL DIODES	250
SCHOTTKY TTL	500
HIGH FREQUENCY BIPOLAR TRANSISTORS	400 - 600
JFETS	600 - 800
LINEAR MICROCIRCUITS	400 - 1000 (est.)
LOW POWER SCHOTTKY TTL	900
TTL	1200

[1]VOLTS ON 100 pF CAPACITOR DISCHARGED THROUGH SERIES RESISTANCE OF 100 OHMS.

RECOMMENDATION:

SINCE ALMOST EVERY ASSEMBLY INCLUDES SOME OF THESE PARTS, WE RECOMMEND STATIC SENSITIVE PROCEDURES BE IMPLEMENTED FOR ALL OPERATIONS INVOLVING SEMICONDUCTOR PART HANDLING.

DIRECT ANY QUESTIONS TO:

RON SCHWARTZ, COMP. REL. ENG., EXT 1605.

APPLICATION NOTES

Avoid using selected components if possible

Using existing part-numbered components for new design has obvious advantages. These include:

1. generally lower cost due to increased volume
2. availability
3. known component history(failure rates, vendor quality, etc.)

When circuit design calls for components with parameter value different than those available, one alternative has been for Component Preconditioning and Test at Tektronix to select an existing part-numbered component for a particular parameter value. A typical example is the selection of a 151-xxxx-00 transistor for a beta between 75 and 80.

As shown in Figure 1, some 151-xxxx-00 transistors are sent to Component Selection and the rest go directly to production areas using the part. The number of transistors sent to Component Selection depends on:

1. The number of selected parts needed, and
2. the projected yield (i.e. how many devices will have a beta between 75 and 80).

Transistors with the desired beta are given a 153-xxxx-00 part number and shipped to the appropriate production lines.

All other transistors are sent to 151-xxxx-00 using areas via the warehouse in bags marked 151-xxxx-89. The -89 suffix is marked on the containers to avoid screening those devices for beta again and again.

These 151-xxxx-00 transistors in -89 bags are NOT rejects but are in fact of higher quality than the parts sent directly to production areas. This is because the opens, shorts, and other defective parts are automatically removed during the selection process.

Some production areas have returned devices in bags marked -89 to the warehouse as rejects, failing to understand this selection process. However, by far the worst misconception about selected parts has to do with the associated cost.

Figure 2 includes relevant usage and price figures for a typical component. Specific prices and part numbers are withheld to protect the innocent.

Suppose that 1k 153-xxxx-00 selected transistors are needed per period and the expected selection yield is 50%. Therefore, 2k devices must be screened by Component Selection to meet the demand.

In screening the 2k 151-xxxx-00's, Component Selection entails a labor charge of around 3¢ per 153-xxxx-00 device. (Labor charges run anywhere from 2 to 5% for each selected device.) The total cost of the selected parts in this example is 28¢.

If all goes well, the "fallout" devices are routed back to the warehouse as -89's and used in production lines at 25¢ each. But you guess it- "If" is a big word.

Figure 3 shows what generally happens two or three years after the selection process for a component was iniated. Notice the following changes:

1. The selected parts has become popular and its usage has increased from 1k devices per period to 5k devices per period.
2. The selection yield has dropped from 50% to 10% because of minor process changes. The vendor's part nonetheless still meets our original min. and max. beta specs.
3. The demand and usage of the original 151-xxxx-00 device we select from has declined from 10k devices/period to 1k/period.
4. The cost of the raw part and the labor charge have both increased.

In this example, Tektronix is accumulating 151-xxxx-00 transistors at the rate of 44k devices per period. Though not all cases are as drastic, the trend certainly exists. We currently have around $160k worth of discrete devices in surplus stock.

In light of this information, Tektronix has taken several steps to ensure that this problem will not reoccur. Effective immediately:

1. Any new selected component request will not be processed unless authorized by a Component Evaluation Manager. This is to ensure that the actual cost of the selected part is know and that all other alternatives have been investigated.

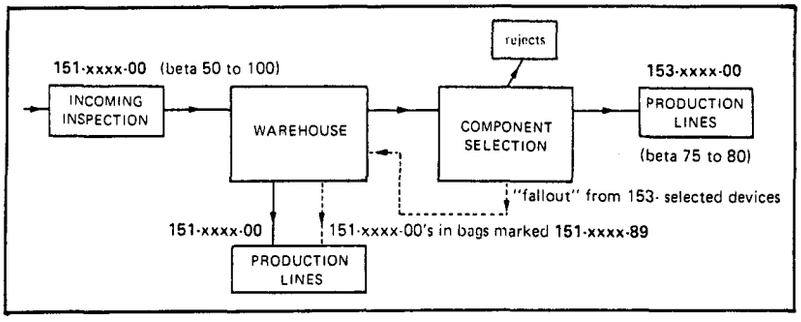

FIGURE 1

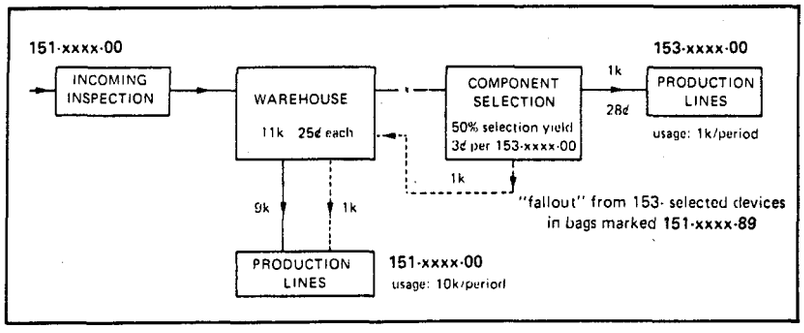

FIGURE 2

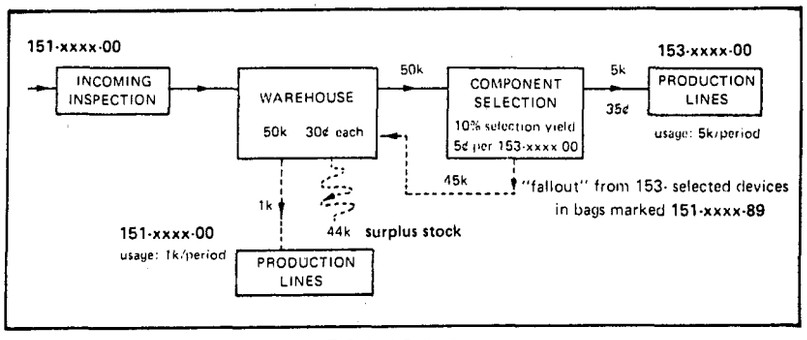

FIGURE 3

2. Expected yield rates and all other hidden costs will be included in the cost of the selected component. For the example given, the actual cost C_a, is:

$$C_a = (\text{raw cost} + \text{labor charge}) + \frac{(\text{Surplus stock})\ (\text{Raw cost})}{\text{no. of selected devices}}$$

$$C_a = 30¢ + 5\% + \frac{44{,}000 \times 30¢}{5{,}000} = 35¢ + \$2.64 = \$2.99 \text{ per selected device}$$

3. Vendors will be queried to see if they can select components. Tek will select any parts where it is economically feasible to do so, but all cost will be computed and weighed before deciding to select in-house.

For further information, contact Component Engineering (Semiconductor Group), Jerry Willard (Manager), Ext. 2539.

TO-220 mounting system features high voltage withstand capability

9

A new integrated TO-220 transistor mounting system has been developed by TV Products Mechanical Engineering, in cooperation with Analog Component Engineering. The system features very high breakdown voltage capability, with attention given to variations in device mounting torque.

The mounting system consists of two parts: a purchased Chomerics "Cho-therm R 1674" silicon rubber insulator, and a Tek-made polysulfone shoulder washer. A special heat-sink counterbore detail is also required. Figure 1 shows an exploded view of this system.

Electrical characteristics

This new system was developed to accommodate the Hi-Pot requirement for UL instrument certification. Common methods used for TO-220 package mounting were not adequate for the 1500 volt specification. What was desired was a long-stemmed shoulder washer and a relatively tight-fitting insulator — both not commercially available. Thus, the need to develop our own system became apparent.

The results of breakdown voltage testing (both initial and repeated "strikes") are shown in Table 1.

Trial #	Largest hole (.151 in.)	Smallest hole (.131 in.)
1 (initial breakdown)	1500V	1850V
2	1400V	1600V
3 (repeated break-	1400V	1900V
4 downs with	1400V	1550V
5 same insulator)	1400V	1550V
6	1400V	1600V

Table 1 — Hi-Pot test results

The manufacturer's electrical ratings are:

Volume resistivity (per ASTM D257)
$2 \times 10^{14}\Omega$/cm(typ)

Dielectric constant (per ASTM D150)
4 @ 1MHz(typ)

Breakdown voltage (per ASTM D149)
1500V (min)

Mechanical considerations

The polysulfone (yellow or black) shoulder washer (Tek P/N 342-0536-00) acts like a spring washer with TO-220 device case styles. It is expressly designed for a #4-40 UNC 2B-type screw, with a nominal applied torque range of 4 to 5 in-lbs. As mounting screw torque is increased, the washer expands contact with the top of the device tab and begins to apply pressure toward the heat sink with the special counterbore detail that must be used (see Figure 1).

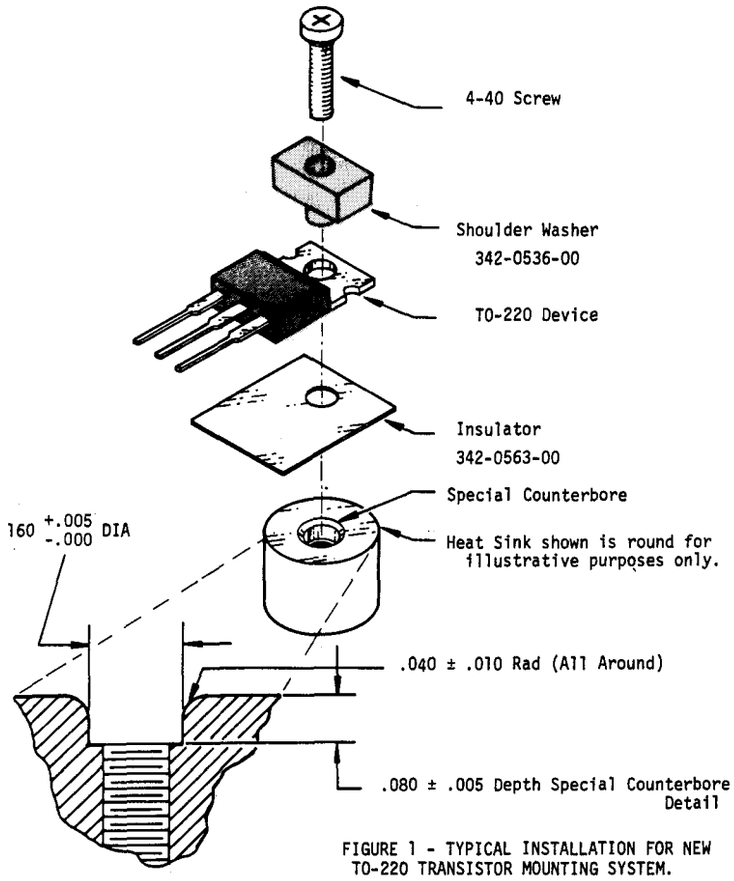

FIGURE 1 - TYPICAL INSTALLATION FOR NEW TO-220 TRANSISTOR MOUNTING SYSTEM.

On the underside of the shoulder washer a circular recess prevents stress-cracking of the washer, and prevents the device tab from being forced into the region around the counterbore. If the tab were forced into the detail it would distort, thereby reducing contact area, increasing device operating temperature and causing possible die fracture.

Thermal attributes

The maximum recommended transistor case operating temperature is 125°C, although 150°C can be used for brief periods. At this temperature some elastic characteristics of the polysulfone spring shoulder washer will be lost, but not to the extent that it will cause device failure.

The average $R\theta_{CS}$ of this system is 1.47°C/W. The thermal resistance between tab and heat sink will decrease somewhat between 10 and 100 hours of operation. This occurs because the insulator material will "cold-flow" into void areas and increase the effective contact area.

One final caution — do not use any heat sink "grease" with this insulator material. Compounds currently used (e.g., Dow #4 and Thermalcote) contain solvents that will attack the silicon rubber insulator material.

FOR MORE INFORMATION, CONTACT JIM WILLIAMSON, EXT. 2552 OR ED JOSTE, TV PRODUCTS MECHANICAL ENGINEERING, EXT. 1330.

STATIC SENSITIVE

HANDLING OF STATIC SENSITIVE COMPONENTS

MOST SEMICONDUCTOR PART TYPES, BOTH SEPARATELY AND IN ASSEMBLIES, HAVE BEEN FOUND TO BE SUSCEPTIBLE TO DAMAGE AT VOLTAGE LEVELS COMMONLY FOUND IN MANUFACTURING ENVIRONMENTS. THE SIMULATED STATIC DISCHARGE TESTS SHOWED THE FOLLOWING CATEGORIES TO BE ESPECIALLY SUSCEPTIBLE:

CATEGORIES	RELATIVE DEGRADATION LEVEL[1]
MOS OR CMOS MICROCIRCUITS OR DISCRETES OR LINEAR MICROCIRCUITS WITH MOS INPUTS	100 - 500
ECL	200 - 500
SCHOTTKY SIGNAL DIODES	250
SCHOTTKY TTL	500
HIGH FREQUENCY BIPOLAR TRANSISTORS	400 - 600
JFETS	600 - 800
LINEAR MICROCIRCUITS	400 - 1000 (est.)
LOW POWER SCHOTTKY TTL	900
TTL	1200

[1]VOLTS ON 100 pF CAPACITOR DISCHARGED THROUGH SERIES RESISTANCE OF 100 OHMS.

RECOMMENDATION:

SINCE ALMOST EVERY ASSEMBLY INCLUDES SOME OF THESE PARTS, WE RECOMMEND STATIC SENSITIVE PROCEDURES BE IMPLEMENTED FOR ALL OPERATIONS INVOLVING SEMICONDUCTOR PART HANDLING.

DIRECT ANY QUESTIONS TO:

RON SCHWARTZ, COMP. REL. ENG. x 1605.

DESOLDERING TOOLS-STATIC CHARGE

TOOL	CHARGE LEVEL RETAINED ON TOOL		
	Immediate charge	Charge after time	
Silverstat Soldapullt	0V	0V	After five minutes
Deluxe Soldapullt	3kV	300-400V	After five minutes
Standard Soldapullt	20kV	10kV	After five minutes
Bulb Solder Sucker	10kV	4kV	After five minutes
Solder-Wick	*2kV	0V	After one minute

*Charge was retained due to solder-wick's plastic reel

Some circuit board components are sensitive to static charge. Also, some desoldering tools create a static charge. In order to identify and preclude potential problems, we have tested the various desoldering tools available for use at Tek.

A circuit board was used, with components removed, to determine static levels. Each device was tested ten times. The desoldering tools were checked for immediate charge retention and for the charge held after five minutes.

Each of the tools except the Silverstat Soldapullt, left a static charge on the circuit board and retained a charge (see chart). The Silverstat Soldapullt, a model with a metallized surface, left no charge and also retained no charge. Therefore, it is the preferred tool. It has been assigned part number 003-0795-00.

For more information on these desoldering tools, contact Herb Zajac, ext. 4759.

SEMICONDUCTOR DEVICE, DIODE

10

SECTIONS 10 THRU 13

TABLE OF CONTENTS

	PAGE(S)
LISTINGS	
ARRAYS	10-3
BACK	10-2
CURRENT LIMITING	11-3
FOUR-LAYER	10-2
MATCHED OR SELECTED	12-6 THRU 12-8
RECTIFIER (BRIDGES)	12-1
RECTIFIER (SILICON)	12-1
RELIABILITY CHECKED	12-8
SIGNAL & SWITCHING (GERMANIUM & GaAs)	12-4
SIGNAL & SWITCHING (SILICON & SCHOTTKY)	12-4
SNAP-OFF	10-3
TEK-MADE SCHOTTKY	12-5
TRANSIENT VOLTAGE SUPPRESSORS	10-3
TUNNEL	10-2
VOLTAGE MULTIPLIERS	12-3
VOLTAGE VARIABLE CAPACITANCE (VVC)	10-2
ZENER	11-1 & 11-2
REFERENCE ONLY (NOT TO BE USED IN NEW DESIGN)	
SECTION 10	10-4
SECTION 11	11-4 & 11-5
SECTION 12	12-5 & 12-9 THRU 12-12
NOTES	10-5, 11-6, 13-11 & 13-17
CROSS REFERENCE INDEXES	
TEK PART NUMBER TO VENDOR NUMBER INDEX	13-2 THRU 13-10
JEDEC NUMBER TO TEK PART NUMBER INDEX	13-12 THRU 13-13
DIODE CASE DRAWINGS	13-14 THRU 13-16
RELIABILITY NOTES	13-18
APPLICATION NOTES	
ZENER DIODES	13-19
HOT CARRIER DIODES	13-20
HANDLING OF STATIC SENSITIVE COMPONENTS	13-21

CATALOG WRITER: NANCY KING, EXT. 2582.

SEMICONDUCTOR DEVICE, DIODE (CONT)

TUNNEL

I_p (mA)	C MAX (pF)	CASE STYLE	PART NUMBER	** ND	CC	†† RC
1 ± .1	10	DO-17	Δ152-0169-00	N	L+	
1 ± .025	5	DO-17	Δ152-0181-00	N	L+	4D
4.7 ± .12	18	DO-17	Δ152-0125-00	N	L+	4F
4.7 ± .12	18	DO-17	Δ152-0125-01	N	L+	4G
5.025 ± .275	7	DO-17	Δ152-0310-00	N	N+	
10 ± 1	90	DO-17	Δ152-0098-00	N	M	
10 ± .25	50	DO-17	Δ152-0182-00	N	M+	
10 ± 1	25	DO-17	Δ152-0386-00	N	L+	
10 ± 1	8	DO-17	Δ152-0140-01	N		
10 ± 1	2.4	DO-17	Δ152-0177-01	N	M+	
10 ± .5	2.4	DO-17	Δ152-0177-02	N	N-	4H
18.9 ± 2.1	1.5	DO-20	Δ152-0329-00	N	O+	
50.75 ± 5.75	t_r 31 pS	Special	Δ152-0383-00	N	O+	

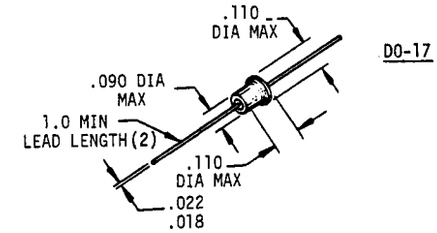

BACK

FOR I MAX	REV I MAX	REC TIME	CASE STYLE	PART NUMBER	** ND	CC	†† RC
5μA	5mA	0.4 ns	DO-7	152-0070-00	N	L+	2I

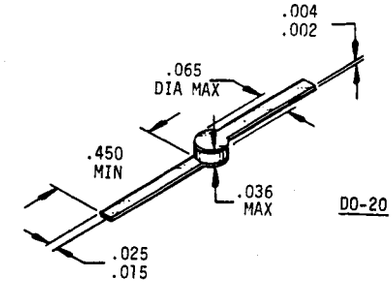

SHOCKLY, FOUR LAYER

V_S	I_F (A)	MAX I_S (μA)	I_H (mA)	MIN I_{rb} (V)	MAX I_{LK} (μA)	OTHER	CASE STYLE †	JEDEC OR VENDOR NO.	PART NUMBER	** ND	CC	†† RC
18 - 22	10	125	10 - 20	22	15	4 Layer	DO-7	1N3831 Fmly	152-0136-00	N		
28 - 36	2	100		28	10	3 Layer	TO-92	MPT32	152-0401-00	N	G-	4F
46 - 54	10	125	15 - 30	30	15	4 Layer	DO-7	4EX264	152-0108-00	U	L	

VOLTAGE VARIABLE CAPACITANCE (VVC)

C_4 NOM pF	TOL. %	QUALITY FACTOR MIN Q	V_R (V)	f (MHz)	BRKDN MIN VOLTS	LEAKAGE CURRENT MAX (μA)	@ V_R (V)	CASE STYLE †	JEDEC OR VENDOR NO.	PART NUMBER	** ND	ΔΔ MID	CC	†† RC
1.	20	325	4	1	30	.02	25	Chip	MV1C2097	152-0679-00	A		I-	
1.2	10	2400	30	50	30	.02	25	DO-35	GC-105	152-0738-00	A		M+	
1.5	20	2400	4	50	45	.02	35	Microstrip	DVH-6934-98	152-0722-00	N		N	
6.8	10.3	300	4	100	60	.5	48	Pill	MV1864D	152-0272-00	A		M+	3H
7.	14.3	3	4	50	100	.1	100	DO-7	V7EA	152-0358-00	N			
7.	10	50	4	50	25	.5	25	DO-7	PG1084	152-0422-00	A		H-	
7.05	6.4	4000	4	50	60	.06	60	Pill	8C2070	152-0684-00	N			
10.	20	3.5	4	50	100	.1	100	DO-7	C33-4001	152-0271-00	A		J+	
11.5		225		100	30	.5	28	A276	BB105B	152-0650-00	A		H-	
17.5	15	15	4	50	50	.030	45	DO-7	1N4806 Fmly	152-0612-00	A		J-	
33.	20	55	4	50	35	1.0	30	DO-7	SMV1263	152-0269-00	A	✓	H-	4D
33.	5	55	4	50	35	1.0	30	DO-7	SMV1263	152-0269-01	A	✓	H	
61.6	9	7	4	50	40	.1	40	DO-7	V56 Fmly	152-0270-00	A		J+	
100.	5	175	4	50	30	.02	25	DO-7	1N5456B	152-0719-00	A		J+	
120.	20	200	2	1	12	.1	10	DO-7	MV1404	152-0595-00	A		L	2I
(@ 2V, Hyperabrupt Junction)														
155.	5.2	70	4	50	22	.010	10	DO-7	V34-4202	152-0578-00	A		M+	3F
(Hyperabrupt Junction)														
155.	10	70	4	50	15	.02	10	DO-7	V34-4204	152-0622-01	A		L	IJ
155.	10	70	4	50	15	.5	10	DO-7	V34-4203	152-0622-00	A		L-	
330.	10	300	8	20	50	.3	45		PQ-1046	152-0597-00	A		M-	
29 @ 3V	10.3	280	3	50	30	.1	28	A276	BB109G	152-0665-00	A		G+	
500 @ 1V	12	150	1	1	18	.1	15	TO-92	SMV1361	152-0673-00	A		I	

SEMICONDUCTOR DEVICE, DIODE (CONT)

SNAP-OFF

SNAP TIME (pS)	MINORITY CARRIER LIFETIME MIN (nS)	MAX (nS)	MIN BRKDN VOLTS (V)	TOTAL CAPACITANCE MIN (pF)	MAX (pF)	@ V_R (V)	CASE STYLE †	JEDEC OR VENDOR NUMBER	PART NUMBER	** ND	CC	†† RC
70 max	10		15		.5	10	U10	SND1571	152-0741-00	A	M+	
100 max	17		30	1.5	2.1	0	DO-35	GC-2534-15	152-0252-01	A	L	
120 max	60	15	30	.45	1.10	10	Chip	A4X618	152-0506-00	A	K+	
140 max	10	50	10	.38	.58	6	F111	MA43677	152-0451-00	A	0	3H
150 max	20	100	35		.9	0	DO-35	A4X583	152-0335-01	A	L-	
150 max	21		40	.85	1.15	6	U10	GC-2544-00	152-0678-00	A	L	
500 max	150	250	35	2.5	10.	0	DO-35	5082-8872	152-0503-00	A	K	
500 max	150	200	35	2.5	10.	0	DO-35	QSRD-4866	152-0503-01	A	L	

TRANSIENT VOLTAGE SUPPRESSORS

ENERGY (JOULES)	STAND OFF V	V_{BR}	MAX V_{CLAMP}	MAX I_R AT STAND OFF V	†CASE STYLE	JEDEC OR VENDOR NUMBER	PART NUMBER	** ND	CC	†† RC
1.5	11.1	13 ± 5% at 1mA	18.2 at 82A	5μA	A1ey	TVP1505A	152-0761-00	A	J-	
1.5	171	200 ± 10% at 1mA	274 at 5.5A	5μA	A1ey	1N6303A	152-0599-00	A	I+	
5	45	55 ± 10% at 5mA	80.3 at 62A	10μA	A1gq	5KP45	152-0788-00	A	K-	4H

ARRAYS (DIODE)

VENDOR NUMBER	PART NUMBER	** ND	CC	†† RC	DESCRIPTION	CASE STYLE †
FSA2619P	156-1540-00	A	J+		8-diode array	16 DIP
FSA2720M	156-1545-00	A	K-		7-diode array	14 DIP
CA3039	156-0106-00	N	J-	4F	6-diode array	MOD TO-101
CA3039	156-0106-01	N	I		100% tested	
CA3141E	156-1450-00	N	G+	3F	10-diode array	16 DIP

PIN

TYPE	ON R_S MIN (Ω)	MAX (Ω)	@I_F (mA)	MAX OFF C C (pF)	@ V_R (V)	CASE STYLE †	VENDOR NUMBER	PART NUMBER	** ND	CC	†† RC
ATTENUATING	25	50 2.5	1 100	.4	50	DO-35	MA47690	152-0524-00	A	J-	
ATTENUATING		8 2.5	20 100	.4	0	A196p	UM6601B	152-0579-00	A	K-	
SWITCHING		.6	10	2.	20	DO-35	5082-3188	152-0728-00	A	F+	
SWITCHING		1.6	100	.2	50	Chip	5082-0012	152-0643-00	A	K	

† CASE DRAWINGS CAN BE FOUND ON PAGES 13-14 thru 13-16.

** NEW DESIGN CODE RECOMMENDATION FROM COMPONENT ENGINEERING:

A = Acceptable
N = Not Recommended
U = Unidentified

ΔΔ PURCHASED ON TAPE AND REEL FROM MACHINE INSERTION

STATIC SENSITIVE

THIS APPLIES TO ALL DEVICES ON THIS PAGE WITH Δ BY PART NUMBER. (See PAGE 10-0 FOR EXPLANATION.)

†† CATALOG RELIABILITY CODES

USAGE/YR	CODE
≥10	1
≥100	2
≥1 000	3
≥10 000	4
≥100 000	5
≥1 000 000	6
≥10 000 000	7

FAILURE FREQ	CODE		%/YR (median)
1/100 000	A	=	.001
1/50 000	B	=	.002
1/20 000	C	=	.005
1/10 000	D	=	.01
1/5 000	E	=	.02
1/2 000	F	=	.05
1/1 000	G	=	.1
1/500	H	=	.2
1/200	I	=	.5
1/100	J	=	1.0+

For further explanation of this code, see page 13-18.

SEMICONDUCTOR DEVICE, DIODE (CONT)
DO NOT USE IN NEW DESIGN

TUNNEL

PART NUMBER	VENDOR NUMBER	§§ STATUS	OTHER	CASE STYLE	I_P (mA)	C MAX (pF)
152-0041-00	XF1A510	NP	Germanium	TO-18	10	6
152-0043-00	1N3129	NP	Germanium	M-83	20	20
152-0063-00	1N2941	NP	Germanium	TO-18	4.7	50
152-0073-00	SMTD604	DL	Germanium	M-83	10	25
152-0074-00	1N3128	NP	Germanium	M-83	5	15
152-0078-00	1N3130	CR	Germanium	M-83	50	25
152-0081-00	1N3714	NP	Germanium	A82	2.2	25
152-0093-00	STD736	CS	Germanium	DO-17	4.7	50
152-0099-00	TD1081	NP	Germanium	M-83	50	6
152-0102-00	STD615	OB	Germanium	A82	10	28
152-0140-00	1N3848	NP	Germanium	M-83	10	25
152-0154-00	TD253	NP	Germanium	M-214	10	9
152-0155-00	TD202	NP	Germanium	DO-20	2.2	5
152-0156-00	37181	NP	Germanium	DO-20	4.7	8
152-0159-00	37181	NP	Germanium	M-83	20	4
152-0189-00	1N3712	DL	Germanium	A82A	1	10
152-0203-00	32623	NP	Germanium	M-83	20	4
152-0214-00	TD252	NP	Germanium	DO-18	4.7	6
152-0225-00	TD256	CM	Germanium	M-214	100	6
152-0253-00	SMTD714	DL	Germanium		50	5
152-0254-00	SMTD716	OB	Germanium		100	6
152-0254-01	SMTD716	OB	Germanium with Ground Spring		100	6
152-0266-00	TD256	DL	Germanium	M-214	100	35
152-0275-00	SMTD907	CS	Germanium		50	5
152-0276-00		NP				
152-0277-00	37650, 1N3851	NP	Germanium	M-83	100	40
152-0330-00	STD930	CS	Germanium		2.2	25
152-0332-00		DL				
152-0334-00	152-0099	NP	Germanium with Ground Spring	M-83	50	6
152-0334-01		OB	Germanium with Ground Spring		50	6
152-0365-00	TD1081	NP	Germanium		50	6
152-0371-00	152-0371-00	DL	Germanium	A239	10	8
152-0373-00	STD932	CS	Germanium	DO-17	4.7	50
152-0375-00	SMTD908	CS	Germanium	DO-17 or DO-20	100	40
152-0376-00		DL	Germanium	A239	5	7
152-0377-00	SMTD636	DL	Germanium		50	1
152-0378-00	TD717	DL	Germanium	A239	4.7	25
152-0379-00	SMTD912	CS	Germanium	DO-17	20	10
152-0380-00	38820	CS	Germanium	A239	20	10
152-0381-00	38769	CS	Germanium	A239	5	15
152-0382-00	SMTD	DL	Germanium		50	3
152-0387-00	SMTD914	CR	Germanium	DO-17	20	4.5
152-0402-00	STD931	OT	Germanium	DO-17	2.2	25
152-0507-00	SMTD961	DL	Germanium inserted & epoxied in holder		50.7	1.2
153-0021-00	152-0078-00	DL	Germanium with matched shunt resistor		50	25
153-0042-00		CR	Checked, Diode/Resistor Pair			
153-0043-00	153-0036	NP	Checked with Ground Spring			
153-0043-01	153-0036	CS	Checked			

BACK

PART NUMBER	VENDOR NUMBER	§§ STATUS	OTHER	CASE STYLE
152-0077-00	BD-1	NP	Germanium	A8

SHOCKLY, FOUR LAYER

PART NUMBER	VENDOR NUMBER	§§ STATUS	OTHER	CASE STYLE
152-0204-00	4E20	DL	Replaced by 152-0136-00	A71

VOLTAGE VARIABLE CAPACITANCE(VVC)

PART NUMBER	VENDOR NUMBER	§§ STATUS	CASE STYLE	C_4 NOM pF	TOL. %	QUALITY FACTOR MIN Q	V_R	f MHz	BREAKDOWN MIN VOLTS	LEAKAGE CURRENT MAX µA	@ V_R
152-0187-00	KV4803	CS	DO-14	10	20	100	4	50	100	.1	100
152-0230-00	SMV8135	LS	Pill	6.8	9.7	300	4	100	60	.5	48
152-0231-00	1N5144 Fmly	OT	DO-7	22	10	200	4	50	60	.5	48
152-0271-01	PG-1155	OT	A276	11	±1pF	225		50	30	.5	28
152-0455-00		EN		13	8						

FOR LISTINGS OF RECOMMENDED PARTS, SEE PAGES 10-2 & 10-3.

NOTES

10

§§ STATUS CODES

CR	Current Production
§EN	Engineering
PP	Pre-Prod
§CS	Customer Service
§NP	Non-Prod
§CL	Cancelled
§DL	Deleted
§OB	Obsolete Instrument
CM	Custom Mod Instrument
§DS	Digital Systems
§OT	Obsolescent Instrument
MP	Modified Part
LR	Last Supply Current
LS	Last Supply Customer Service
VN	Vendor
TC	Telequipment Current Prod.
IN	International
SC	Sony/Tek Current Prod.

THE STATUS IN THIS CATALOG WAS CORRECT AT THE TIME IT WAS PUBLISHED, BUT IT IS SUBJECT TO CHANGE.

§ TO USE A PART WITH THIS STATUS ON A NEW INSTRUMENT REQUIRES THAT A NEW PURCHASED PART INITIATION FORM (PPIF) BE INITIATED.

(A GLOSSARY OF TERMS FOR THESE STATUS CODES CAN BE FOUND ON PAGE 0-44).

COST CODE

(CC COLUMN)

CODE	≈ VALUE with -	≈ VALUE no suffix	≈ VALUE with +
A	.2¢	.5¢	.75¢
B	1.25¢	1.5¢	2¢
C	2.5¢	3¢	3.75¢
D	4.25¢	5¢	6¢
E	7¢	8¢	10¢
F	13¢	15¢	18¢
G	22¢	25¢	35¢
H	40¢	50¢	60¢
I	65¢	75¢	$1
J	$1.25	$1.50	$2
K	$2.50	$3	$3.75
L	$4.25	$5	$6
M	$7	$8	$10
N	$13	$15	$18
O	$22	$25	$35+

NOTE: Costs may vary from order to order due to order quantities, vendor, etc.

SEMICONDUCTOR DEVICE, DIODE (CONT)

ZENER

V	TOL %	POWER (W)	TEST CURRENT (mA)	IMPD MAX (Ω)	TEMP. COEF (per °C)	† CASE STYLE	JEDEC OR VENDOR NUMBER	MID ΔΔ	PART NUMBER	** ND	CC	†† RC	OTHER
2.4	5.	.4	20.	30.		DO-35	1N4370A		152-0688-00	A	E-	3E	
2.7	5.	.4	20.	30.		DO-35	1N4371A		152-0807-00	A	E+		
3.	2.	.4	2.	220.		DO-35	SZG30025RL		152-0667-00	A	G+		
3.	5.	.4	20.	29.		DO-7	1N4372A	✓	152-0278-00	A	D	5A	
3.3	5.	.4	20.	28.		DO-7	1N746A		152-0690-00	A	D		
3.3	5.	1.5	113.	10.		DO-41	1N5913B		152-0732-00	A	G+		
3.6	5.	.4	20.	24.	5.5mV	DO-7	1N747A		152-0744-00	A	D-	4F	
3.9	5.	.4	20.	23.		DO-35	1N748A		152-0689-00	A	D		
4.	5.	.4	2.	500.		DO-35	SZG30068		152-0693-00	A	F-		
4.3	5.	.4	20.	22.	-1.mV	DO-7	1N749A	✓	152-0395-00	A	D	5E	
4.75	5.	.4	5.	60.		DO-7	SZG137	✓	153-0059-00	N	F	3F	
5.	1.	.4	5.	50.	.6mV	DO-7	SFG195	✓	152-0662-00	A	G	5B	
5.1	5.	.4	5.	50.	.6mV	DO-7	1N751A Fmly	✓	152-0195-00	A	D+	5C	
5.1	5.	.4	5.	50	.6mV	DO-7	1N751A Fmly	✓	152-0226-00	A	D+	4B	50 μV noise max @ 40mA I_Z
5.1	5.	.4	20.	17.	.6mV	DO-7	1N751A	✓	152-0279-00	A	D	5D	
5.1	5.	1.	49.	7.	.6mV	A31a	1N3826A		152-0481-00	A	I-		
5.1	10.	1.	49.	7.		DO-41	1N4733		152-0691-00	N	G		
5.6	5.	.4	5.	20.	1.1mV	DO-7	1N752A	✓	152-0175-01	N	F+		20 μV noise max @ 5mA I_Z
5.6	5.	.4	20.	11.	1.1mV	DO-7	1N752A	✓	152-0175-00	A	D	5D	
5.6	5.	10.	445.	1.	1.1mV	DO-4	1N3997A		152-0519-00	A	L	3G	With insulating mounting hardware
5.6	5.	1.	810.	5.		DO-41	1N4734A		152-0772-00	A	D+		
5.6	7.2	200.mW	5.	40.	1.1mV	SOT-23	BZX84-C5V6		152-0739-00	N			
6.2	2.	.25	7.5	15.	.002%	DO-7	1N3497 Fmly	✓	152-0486-00	A	H+	4E	TC @ 0 to 75°C
6.2	2.	.4	5.	10.	2.2mV	DO-35	SZG30205		152-0760-00	A	F-		
6.2	5.	.25	7.5	15.	.002%	DO-7	1N3497	✓	152-0317-00	A	G	5D	TC @ 0 to 75°C
6.2	5.	.4	.01			DO-7	SZG231-1	✓	153-0058-00	A	G		
6.2	5.	.4	5.	10.	2.2mV	DO-7	1N753A Fmly	✓	152-0166-00	A	D	5C	
6.2	5.	.4	5.	10.	2.2mV	DO-7	1N753A Fmly	✓	152-0227-00	A	E-	4C	75 μV noise max @ 4mA I_Z
6.2	5.	.4	7.5	15.	.01%	DO-7	1N821	✓	152-0461-00	A	F-	4D	TC @ -55 to 100°C
6.2	5.	.4	7.5	15.	.001%	DO-7	1N827		152-0456-00	A	H		TC @ -55 to 100°C
6.2	5.	.4	20.	7.	2.2mV	DO-7	1N753A	✓	152-0280-00	A	D	5D	
6.2	5.	1.	41.	2.	2.2mV	DO-41	1N4735A	✓	152-0757-00	A	D+	4D	Mini Glass
6.2	5.	1.	41.	2.	2.2mV	A31a	1N3828A		152-0309-00	A	I-	4F	
6.2	5.	10.	405.	1.1	2.2mV	DO-4	1N3998A		152-0148-00	A	L		
6.3	2.	.4	7.5	15.	.001%	DO-7	1N827		152-0727-00	A	I	3F	
6.3	3.2	.4	20.	7.	2.3mV	DO-7/DO-35	1N753A Fmly	✓	152-0337-00	A	E+	4H	
6.35	1.	.4	7.5	15.	.0005%	DO-7	1N829A Fmly		152-0526-00	A	L+	3E	TC @ -55 to 100°C
6.4	5.	.4	1.	100.	.01%	DO-7	1N4570		152-0464-00	A	J+		TC @ 0 to 75°C
6.8	5.	.4	18.5	4.5		DO-7	1N957B	✓	152-0647-00	A	D	5B	
6.8	5.	1.	37.	3.5	2.7mV	A31a	1N3016B		152-0290-00	A	I		
7.	2.	.4	20.	5.	2.9mV	DO-35/DO-41	SZG30174		152-0745-00	A	I		
7.	5.	.4	10.	7.	2.9mV	DO-7	SZG98	✓	152-0638-00	A	G		
7.5	5.	.4	16.5	5.5	3.4mV	DO-7	1N958B	✓	152-0127-00	A	D	5D	
7.5	5.	.4	16.5	5.5	3.4mV	DO-7	1N958B Fmly	✓	152-0326-00	A	E+		.5mV noise max @ 7mA I_Z
7.5	5.	1.	34.	4.	3.4mV	A146h	UZ2359		152-0683-00	A	H		Mini Glass
8.2	2.	.4	10.		3.9mV	DO-7	1N959 Fmly	✓	152-0437-00	A	G-		Impd = 6.5Ω max @ 15mA
8.2	5.	.4	1.	4.	3.9mV	DO-7	1N959B Fmly	✓	152-0217-00	A	D	5C	
8.2	5.	1.	31.	4.5	3.9mV	A31a	1N3018B		152-0576-00	A	H-	3H	
9.	2.	.4	1.		4.6mV	DO-7	1N960 Fmly	✓	152-0611-00	A	F-		Impd = 7.5Ω max @ 14mA
9.	5.	.4	2.	80.	.01%	DO-7	SZ50850	✓	152-0359-00	A	H-	4F	TC @ -15 to 55°C
9.	5.	.5	7.5	20.	.01%	DO-7	1N935A Fmly	✓	152-0123-00	A	G+	3F	TC @ -15 to 100°C
9.	5.	.5	7.5	20.	.005%	DO-7	1N936 Fmly	✓	152-0212-00	A	H-	4E	TC @ 0 to 75°C
9.	5.	.5	7.5	20.	.002%	DO-7	1N937	✓	152-0411-00	A	H-	4E	TC @ 0 to 75°C
9.	5.	.5	7.5	20.	.001%	DO-7	1N938A		152-0124-00	A	J-	4E	TC @ -55 to 100°C
9.	5.	.5	7.5	20.	.001%	DO-7	1N938A Fmly		152-0174-00	A	L+		TC @ -55 to 100°C 1mV max drift/wk
9.	5.	.25	4.	40.	.001%	DO-7	SZ13463K		152-0366-00	N	L		TC @ 0 to 75°C
9.1	5.	.4	14.	7.5	4.6mV	DO-7	1N960B	✓	152-0306-00	A	C	5E	
9.1	5.	.4	14.	7.5	4.6mV	DO-7	1N960B Fmly	✓	152-0306-01	A	F-	3F	I_R = 100nA max @ 6.9V
9.1	5.	1.	28.	5.	4.6mV	DO-41	1N4739A	✓	152-0512-00	A	D		Mini Glass
9.1	5.	3.	75.	3.	4.6mV	A60	UZ1364		152-0438-00	A	J-	4G	
10.	1.	.4	.25		5.5mV	DO-7	1N961B Fmly	✓	152-0514-00	A	G+	4C	Impd = 8.5Ω max @ 12.5mV
10.	5.	.4	12.5	8.5	5.5mV	DO-7	1N961B	✓	152-0149-00	A	C	5F	
10.	5.	1.	25.	7.	5.5mV	A31a	1N3020B		152-0120-00	A	H-		
10.	10.	50.	1.2A	.6	5.5mV	C5a	1N2808A		152-0730-00	N	L		
11.	5.	.4	11.5	9.5	6.6mV	DO-7	1N962B	✓	152-0055-00	A	D-	4C	
11.7	5.	.5	7.5	30.	.005%	DO-7	1N942		152-0589-00	A	I+		TC @ 0 to 75°C
11.7	5.	.5	7.5	30.	.001%	DO-7	1N944 Famly		152-0171-00	A	J-		TC @ 0 to 75°C
12.	5.	.4	10.5	11.5	7.8mV	DO-7	1N963B	✓	152-0168-00	A	C	5D	
12.	5.	5.	100.	2.5		A1ee	1N5349B		152-0809-00	A	H		
12.	5.	1.	21.	9.	7.8mV	DO-41	1N4742A	✓	152-0520-00	A	E	4E	Mini Glass

ΔΔ PURCHASED ON TAPE AND REEL FOR MACHINE INSERTION
† FOR CASE DRAWINGS, SEE PAGES 13-14 thru 13-16
†† FOR RELIABILITY CODES, SEE PAGE 11-3.

** NEW DESIGN RECOMMENDATION FROM COMPONENT ENGINEERING
A = Approved
N = Not Recommended

NOTE: ZENERS NOT TO BE USED IN NEW DESIGN ARE LISTED ON PAGES 11-4 & 11-5.

SEMICONDUCTOR DEVICE, DIODE (CONT)

ZENER (CONT)

V	TOL %	POWER (W)	TEST CURRENT (mA)	IMPD MAX (Ω)	TEMP. COEF (per °C)	† CASE STYLE	JEDEC OR VENDOR NUMBER	MID ΔΔ	PART NUMBER	** ND	CC	†† RC	OTHER
12.	5.	3.	65.	5.	7.8mV	A146f	UZ1215		152-0369-00	A	K		
12.5	4.	.4	1.7	100.	8.1mV	DO-7	1N963B Fmly	✓	152-0236-00	A	F	3F	V_Z = .1V max from 1.7 to 2.7mA I_{ZT}
12.6	5.	.4	9.9	12.4	8.2mV	DO-7	SF13294	✓	152-0508-00	A	E+	4C	
12.6	5.	1.	19.	10.	8.2mV	A31a	1N3022 Fmly		152-0059-00	A			
12.6	5.	10.	198.	3.	8.2mV	DO-4	1N2976 Fmly		152-0089-00	A	N-		Stud is anode
13.	2.	.5	9.5	13.		DO-7	5M13ZS2		152-0702-00	A	H-		
14.	1.	1.	20.	10.	9. mV	DO-41	SZG40053		152-0746-00	A	H		
14.5	1.5	.4	8.5	16.	10. mV	DO-7	SZG193		153-0050-00	A	G+		
15.	5.	.4	8.5	16.	10.5mV	DO-7	1N965B	✓	152-0243-00	A	D	5D	
15.	5.	1.	17.	14.	10.5mV	DO-41	1N4744A	✓	152-0405-00	A	E	5B	Mini Glass
15.	5.	1.	17.	14.	10.5mV	A31a	1N3024B		152-0024-00	A	I-		
15.	5.	5.	75.	2.5	10.5mV	A1ee	1N5352B		152-0733-00	A	H-		
16.	5.	.4	7.8	17.	11.2mV	DO-7	1N966B		152-0571-00	A	D+	4H	
18.	5.	.4	7.	21.	13.5mV	DO-7	1N967B	✓	152-0590-00	A	D-	4F	
18.	5.	5.	75.	2.5	13.5mV	A1ee	1N5355B		152-0783-00	A			
19.3	1.	.4	.5	70.		DO-7	SZG266		152-0680-00	A	G+	4D	
20.	5.	.4	6.2	25.	15. mV	DO-7	1N968B	✓	152-0304-00	A	C	5D	
20.	5.	1.	12.5	22.	15. mV	A31a	1N3027B		152-0291-00	A	H-		
22.	2.	.4	14.	29.	17.6mV	DO-35	SZG3033RL	✓	152-0778-00	A	G		
22.	5.	.4	5.6	29.	17.6mV	DO-7	1N969B	✓	152-0281-00	A	D-	4D	
24.	5.	.4	5.2	33.	19.2mV	DO-7	1N970B	✓	152-0265-00	A	D	4E	
25.	5.	1.	10.	33.	20.5mV	A31a	1N3029 Fmly		152-0022-00	A	I-	4F	
27.	2.	.4	11.	41.	22.9mV	DO-35		✓	152-0777-00	A	H-		
27.	5.	.4	4.6	41.	22.9mV	DO-7	1N971B	✓	152-0147-00	A	D-	4E	
28.	5.	.4	1.5	41.		DO-7	SZG134	✓	152-0651-00	A	H-		
30.	5.	.4	4.2	49.	25.5mV	DO-7	1N972B	✓	152-0282-00	A	D	4E	
30.	5.	1.	8.5	40.	25.5mV	A31a	1N3031B		152-0292-00	A	I-		
30.	5.	10.	85.	8.	25.5mV	DO-4	1N2989B		152-0480-00	A	J		
33.	5.	.4	3.8	58.	28. mV	DO-7	1N973B	✓	152-0241-00	A	D-	4E	
33.	5.	1.	7.5	45.	28. mV	A31a	1N3032B		152-0293-00	A	I-		
36.	5.	1.	7.	50.	30.6mV	A31a	1N3033B		152-0294-00	A	I-	4F	
39.	5.	1.	6.5	60.	35. mV	A31a	1N3034B		152-0229-00	A	I-	3H	
43.	5.	.4	3.	93.	39. mV	DO-7	1N976B	✓	152-0283-00	A	D-	4F	
47.	5.	.4	2.7	105.	42. mV	DO-7	1N977B	✓	152-0284-00	A	D-		
47.	5.	1.	5.5	80.	42. mV	A31a	1N3036B		152-0394-00	A	I-	4F	
47.	5.	1.	5.5	80.	42. mV	DO-41	1N4756A	✓	152-0756-00	A	E		Mini Glass
51.	5.	.4	2.5	125.	46. mV	DO-7	1N978B	✓	152-0255-00	A	D-	5B	
51.	5.	1.	5.	95.	46. mV	A31a	1N3037B		152-0150-00	A	I-		
51.	5.	10.	50.	15.	46. mV	Do-4	1N2997B		152-0096-00	A			
56.	5.	.4	2.2	150.	50. mV	DO-7	1N979B	✓	152-0268-00	A	D	4G	
56.	5.	3.	10.	70.	50. mV	A146f	UZ756		152-0264-00	N	K-		Surge I = 700mA max
56.	5.	10.	45.	16.	50. mV	DO-4	1N2999B		152-0311-00	A	I-		
62.	5.	.4	2.	185.	56. mV	DO-7	1N980B	✓	152-0285-00	A	D	5F	
75.	2.	.4	1.7	270.	68. mV	DO-7	1N982 Fmly	✓	152-0580-00	A	F+	4F	
75.	5.	1.	11.	100.		A31a	SZ12386		152-0215-00	N	J+		
75.	5.	.4	1.7	270.	68. mV	DO-7	1N982B	✓	152-0286-00	A	D	5F	
75.	5.	1.	3.3	175.	68. mV	A31a	1N3041B		152-0101-00	A	I-	4E	
75.	5.	10.	33.	22.	68. mV	DO-4	1N3002B		152-0312-00	A	L		
82.	5.	.4	1.5	330.	74. mV	DO-7	1N983B	✓	152-0357-00	A	D	4H	
82.	5.	1.	3.	200.	74. mV	A31a	1N3042B		152-0295-00	A	I-		
82.	5.	5.	15.	65.	74. mV	A1ee	1N5375B		152-0749-00	A	H-		
91.	5.	1.	2.8	250.	86. mV	A146f	UZ2354		152-0513-00	A	H	3I	Mini Glass
100.	5.	.4	1.3	500.	100. mV	DO-7	1N985B	✓	152-0427-00	A	E+	4F	
100.	5.	1.	2.5	350.	100. mV	A31a	1N3044B	✓	152-0087-00	A	I-	3F	
108.	2.	.4	.2	1000.		DO-7	SZG20107	✓	152-0657-00	A	G-		
110.	5.	.4	1.1	750.	110. mV	DO-7	1N986B	✓	152-0287-00	A	E+	4E	
110.	5.	1.	2.3	450.	110. mV	A31a	1N3045B		152-0305-00	A	I-	3G	
120.	5.	.4	1.	900.	120. mV	DO-7	1N987B	✓	152-0428-00	A	G	4D	
120.	5.	1.	2.	550	120. mV	A31a	1N3046B		152-0100-00	A	I-		
120.	5.	5.	10.	170.	120. mV	A133	1N5380B		152-0669-00	A	H-		
130.	5.	1.	1.9	700.	130. mV	A31a	1N3047B		152-0417-00	A	L		
140.	5.	.4	.9	1300	140. mV	DO-7	1N988 Fmly	✓	152-0288-00	A	E+	4F	
150.	5.	.4	.85	1500	150. mV	DO-7	1N989B	✓	152-0247-00	A	E+	4E	
150.	5.	1.	1.7	1000	150. mV	A31a	1N3048B		152-0510-01	A	H-	3H	
150.	10.	5.	8.	330.	150. mV	A146m	UZ5215		152-0240-00	N	K-		
180.	5.	.4	.68	2200	180. mV	DO-7	1N991B	✓	152-0289-00	A	E+	4C	
180.	5.	5.	1.	430.	200. mV	A1ee	1N5386B		152-0705-00	A	G	1J	
200.	5.	.4	.65	2500	200. mV	DO-7	1N992B		152-0470-00	A	G		

SEMICONDUCTOR DEVICE, DIODE (CONT)
CURRENT LIMITING

PINCHOFF CURRENT (mA)	TEST VOLTS (V)	IMPEDANCE AT TEST V (MΩ)	OPERATING PEAK VOLTS (V)	† CASE STYLE	JEDEC OR VENDOR NUMBER	PART NUMBER	** ND	CC	†† RC
.05 to .30	25	10.	100	DO-7	1N5283 Fmly	152-0328-00	N	L+	
.27 ± 10%	25	14.	100	DO-7	1N5285	152-0490-00	N	J+	
1.2 ± 10%	25	.64	100	DO-7	1N5299	152-0460-00	N	J+	

†† CATALOG RELIABILITY CODES

USAGE/YR	CODE
≥10	1
≥100	2
≥1 000	3
≥10 000	4
≥100 000	5
≥1 000 000	6
≥10 000 000	7

FAILURE FREQ	CODE		%/YR (median)
1/100 000	A	=	.001
1/50 000	B	=	.002
1/20 000	C	=	.005
1/10 000	D	=	.01
1/5 000	E	=	.02
1/2 000	F	=	.05
1/1 000	G	=	.1
1/500	H	=	.2
1/200	I	=	.5
1/100	J	=	1.0 +

For further explanation of this code, see page 13-18.

COST CODE
(CC COLUMN)

CODE	≈ VALUE with -	≈ VALUE no suffix	≈ VALUE with +
A	.2¢	.5¢	.75¢
B	1.25¢	1.5¢	2¢
C	2.5¢	3¢	3.75¢
D	4.25¢	5¢	6¢
E	7¢	8¢	10¢
F	13¢	15¢	18¢
G	22¢	25¢	35¢
H	40¢	50¢	60¢
I	65¢	75¢	$1
J	$1.25	$1.50	$2
K	$2.50	$3	$3.75
L	$4.25	$5	$6
M	$7	$8	$10
N	$13	$15	$18
O	$22	$25	$35+

NOTE: Costs may vary from order to order due to order quantities, vendor, etc.

ΔΔ PURCHASED ON TAPE AND REEL FOR MACHINE INSERTION.
† FOR CASE DRAWINGS, SEE PAGES 13-14 thru 13-16.

** NEW DESIGN RECOMMENDATION FROM COMPONENT ENGINEERING

A = Approved
N = Not Recommended

NOTE: ZENERS NOT TO BE USED IN NEW DESIGN ARE LISTED ON PAGES 11-4 & 11-5.

SEMICONDUCTOR DEVICE, DIODE (CONT)
ZENER (CONT)
DO NOT USE IN NEW DESIGN

11

PART NUMBER	JEDEC OR VENDOR NO.	§§ ST	† CASE STYLE	V	TOL %	POWER (W)	TEST CURRENT (mA)	IMPD MAX (Ω)	TEMP COEF (mV/°C)	OTHER
152-0004-00	1N707	NP	A62	7.1	12.7	.25	10.	10.	.6	Replaced by 152-0127-00
152-0018-00	1N2995	DL	DO-4	47.	20.	10.	55.	14.	7.2	Replaced by 152-0303-00
152-0019-00	1N2971	OB	DO-4	7.5	20.	10.	335.	1.3	3.4	Replaced by 152-0300-00
152-0020-00	1N2985A	OB	DO-4	22.	10.	10.	115.	5.	17.6	Replaced by 152-0301-00
152-0021-00	1N2991	OB	DO-4	36.	20.	10.	70.	10.	30.6	Replaced by 152-0302-00
152-0024-01	1N466B	DL	DO-13	15.	5.	1.	63.	14.		
152-0031-00	1N718A	NP	DO-7	15.	5.	.25	12.	13.	10.5	Replaced by 152-0243-00
152-0032-00	1N986	DL	DO-7	105.	10.	.25	.6	1000.	91.	
152-0033-00	1N988	NP	DO-7	140.	10.	.25	.45	2000.	140.	
152-0034-00	1N753	NP	DO-7	6.2	10.	.4	20.	7.	2.2	Replaced by 152-0280-00
152-0037-00	1N3820	NP	C-14	200.	20.	1.5	1.9	1000.	200.	Replaced by 152-0299-00
152-0038-00	1N3816	NP	C-14	140.	20.	1.5	2.9	600.	140.	
152-0039-00	1N3814	NP	C-14	110.	20.	1.5	3.4	300.	10.	
152-0044-00	1N3042A	NP	A31a	82.	10.	1.	3.	200.	74.	Replaced by 152-0135-00
152-0052-00	1N3004B	OB	DO-4	91.	5.	10.	28.	35.	82.	
152-0053-00	1N2984B	OB	DO-4	20.	5.	10.	125.	4.	15.	
152-0054-00	1N3798B	OB	C-14	10.	5.	1.5	37.5		5.5	Matched pair
152-0056-00	1N3804B	CS	C-14	43.	5.	1.5	9.	45.	39.	
152-0057-00	1N3807B	NP	C-14	56.	5.	1.5	6.7	75.	9.6	Replaced by 152-0264-00
152-0058-00	SG22	NP	A1	.64	10.		1.	50.		Replaced by 152-0141-01
152-0060-00	1N3027A	NP	A31a	20.	10.	1.	12.5	22.	15.	Replaced by 152-0291-00
152-0064-00	1N961A	CS	A3989	10.	10.	.4	12.	8.5		
152-0067-00	1N3029	NP	A31a	24.	20.	1.	10.	25.		
152-0068-00	1N3031A	NP	A31a	30.	10.	1.		40.	8.5	
152-0069-00	1N3041A	DL	A31a	75.	10.	1.	3.3	175.	68.	
152-0076-00	1N4372	CS	DO-7	3.	10.	.4	20.	29.		Replaced by 152-0278-00
152-0082-00	1N3008B	DL	DO-4	120.	5.	10.	20.	75.	120.	
152-0086-00	1RS5651	NP		36.	10.	1.5			30.6	Replaced by 152-0294-00
152-0091-00	1N982	NP	DO-7	75.	20.	.4	1.7	270.	68.	Replaced by 152-0286-00
152-0091-01	1N483	DL	G-1	75.	20.	1.				Replaced by 152-0101-00
152-0094-00	1N3037	NP	A31a	50.	10.	1.	5.	90.	45.	Replaced by 152-0150-00
152-0097-00	1N3800A	NP	C-14	30.	10.	1.5	12.	25.	25.5	Replaced by 152-0296-00
152-0104-00	1N3016A	NP	A31a	6.8	10.	1.	37.	3.5	2.8	Replaced by 152-0290-00
152-0105-00	1N2620	CS	A31a	9.3	5.	.75	10.	15.	.01	TC @ 0 to 75°C
152-0118-00	1N3033A	NP	A31a	36.	20.	1.	7.	50.	30.6	Replaced by 152-0296-00
152-0118-02	1N3033A	NP	A31a	36.	20.	1.	7.	50.	30.6	Replaced by 152-0296-01
152-0119-00	1N968A	NP	DO-7	22.	10.	.4	5.6	29.	17.6	Replaced by 152-0281-00
152-0122-00	1N3001B	DL	DO-4	68.	10.	10.	37.	18.	61.	Replaced by 152-0133-00
152-0126-00	1N3024A	CS	A31a	15.	10.	1.	17.	14.		
152-0132-00	1N2997B	DL	DO-4	51.	5.	10.	50.	15.	46.	Replaced by 152-0096-00
152-0133-00	1N3001B	OB	DO-4	68.	5.	10.	37.	18.	61.	
152-0134-00	1N3044A	CS	A31a	100.	10.	1.	2.5	350.	100.	Replaced by 152-0087-00
152-0135-00	1N3042A	DL	A31a	82.	10.	1.	3.	200.	74.	Replaced by 152-0295-00
152-0137-00	1N3016	CS	A31a	13.6	2.	2.	37.	7.	5.4	Series matched pair, values given are for both diodes in series.
152-0139-00	1N751	MP	DO-7	5.1	10.	.4	20.	17.	.6	Replaced by 152-0279-00
152-0142-00	1N972A	NP	DO-7	30.	10.	.4	4.2	49.	25.5	Replaced by 152-0282-00
152-0146-00	1N991A	NP	DO-7	180.	10.	.4	.68	2.2k	180.	Replaced by 152-0289-00
152-0157-00	4M140	NP	DO-7	140.	10	.4	.9	1300.	140.	
152-0166-01	1N753A	DL	DO-7	6.2	5.	.4	5.	10.	2.2	Motorola only
152-0167-00	1N976	CS	A398	43.	20.	.4	3.	93.	39.	Replaced by 152-0283-00
152-0172-00	1N970A	NP	A398	24.	10.	.4	5.2	33.	19.2	Replaced by 152-0265-00
152-0176-00	1N980A	NP	DO-7	62.	10.	.4	2.	185.	56.	Replaced by 152-0285-00
152-0190-00	1N977A	NP	DO-7	47.	10.	.4	2.7	105.	42.	Replaced by 152-0284-00
152-0191-00	1N980A	DL	DO-7	62.	10.	.4	2.	185.	56.	Replaced by 152-0285-00
152-0213-00	1N3032	CS	A31a	33.	20.	1.	7.5	45.	28.	Replaced by 152-0293-00
152-0228-00	1M105Z10	NP	A31a	105.	10.	1.	2.4	400.	105.	
152-0234-00	1N976A	NP	DO-7	43.	10.	.4	3.	93.	39.	Replaced by 152-0283-00
152-0235-00	1N979A	DL	DO-7	60.	10.	.4	1.5	150.	54.	Matched pair; replaced by (2) 152-0268-00
152-0267-00		NP		27.	10.	1.8			22.9	
152-0295-01	1N3042B	DL	A31a	82.	5.	1.	3.	200.	74.	
152-0296-00	1N3800B	CS	C-14	30.	5.	1.5	12.	25.	25.5	
152-0297-00	1N3814B	CS	C-14	110.	5.	1.5	3.4	300.	110.	
152-0298-00	1N3816B Fmly	CR	C-14	140.	5.	1.5	2.7	550.	140.	
152-0299-00	1N3820B	CR	C-14	200.	5.	1.5	1.9	1000.	200.	
152-0300-00	1N2971B	DL	DO-4	7.5	5.	10.	335.	1.3	3.4	
152-0301-00	1N2985B	DL	DO-4	22.	5.	10.	115.	5.	17.6	
152-0302-00	1N2991B	DL	DO-4	36.	5.	10.	70.	10.	30.6	
152-0303-00	1N2995B	DL	DO-4	47.	5.	10.	55.	14.	42.	
152-0308-00	GREA35	NP	DO-7	9.	5.		4.	40.	.005	

NOTE: FOR LISTINGS OF RECOMMENDED PARTS, SEE PAGES 11-1 THRU 11-3.

SEMICONDUCTOR DEVICE, DIODE (CONT)
ZENER (CONT)
DO NOT USE IN NEW DESIGN

PART NUMBER	JEDEC OR VENDOR NO.	§§ ST	+ CASE STYLE	V	TOL %	POWER (W)	TEST CURRENT (mA)	IMPD MAX (Ω)	TEMP COEF (mV/°C)	OTHER
152-0309-01	1N3828A	CS	A31a	6.2	5.	1.	41.	2.	3.5	Motorola only
152-0318-00	1N4166	DL	DO-29	15.	5.	1.	17.	14.	10.5	
152-0424-00	UZ5807	EN	A223	7.5	10.	1.25	175.	1.5	3.4	
152-0440-00	1N3817B	CS	C-14	150.	5.	1.5	2.5	700.	150.	
152-0461-01	1N821	DL	DO-7	6.2	5.	.4	7.5	15.	.1	
152-0500-00	UZ718	DL	A60	18.	5.	3.	40.	8.	13.5	
152-0521-00	SZ13479	EN	DO-7	105.	5.	.4	1.05	825.	105.	
152-0527-00	1N748B	OB	A1	3.9	5.	.4	20.	23.		
152-0532-00	1N5347B	OB	A1ee	10.	5.	5.	125.	2.		
152-0534-00	1N4733	OB	A1ay	5.1	10.	7.	49.	7.		
152-0537-00	1N5227A	OB	A398a	3.6	10.	.5	20.	24.	.1	
152-0553-00	1N705A	OB		48.	5.	.25				
152-0562-00	1N983	CS	DO-7	82.1	1.1	.4	1.5	330.		
152-0563-00	1N4561	CR	C-5a	5.6	20.	50.	2250.	.12	1.1	
152-0573-00	1N3997AR	OT	DO-4	5.6	5.	10.	445.	1.	1.1	Reverse polarity stud is anode
152-0615-00	1N5378B	EN	A1ee	100.	5.	5.	12.	90.	100.	
152-0641-00	1N3828A	DL	A31a	6.2	5.	1.	41.	2.	3.5	
153-0001-00	1N752A	DL	DO-7	5.6	5.	.4	20.	11.	1.1	Checked for noise
153-0005-00	152-0298-00	NP								Matched pair
153-0017-00	152-0297-00 152-0298-00	NP								Checked
153-0018-00	152-0297-00	NP								Checked
153-0019-00	152-0299-00	NP								Checked
153-0026-00	152-0297-00 152-0298-00	NP								Series matched pair
153-0027-00	1N755A	NP								Selected

§§ STATUS CODES

CR	Current Production
§EN	Engineering
PP	Pre-Prod
§CS	Customer Service
§NP	Non-Prod
§CL	Cancelled
§DL	Deleted
§OB	Obsolete Instrument
CM	Custom Mod Instrument
§DS	Digital Systems
§OT	Obsolescent Instrument
MP	Modified Part
LR	Last Supply Current
LS	Last Supply Customer Service
VN	Vendor
TC	Telequipment Current Prod.
IN	International
SC	Sony/Tek Current Prod.

THE STATUS IN THIS CATALOG WAS CORRECT AT THE TIME IT WAS PUBLISHED, BUT IT IS SUBJECT TO CHANGE.

§ TO USE A PART WITH THIS STATUS ON A NEW INSTRUMENT REQUIRES THAT A NEW PURCHASED PART INITIATION FORM (PPIF) BE INITIATED.

(A GLOSSARY OF TERMS FOR THESE STATUS CODES CAN BE FOUND ON PAGE 0-44).

+FOR CASE STYLES, SEE PAGES 13-14 thru 13-16.

NOTES

11

COST CODE

(CC COLUMN)

CODE	≈ VALUE with -	≈ VALUE no suffix	≈ VALUE with +
A	.2¢	.5¢	.75¢
B	1.25¢	1.5¢	2¢
C	2.5¢	3¢	3.75¢
D	4.25¢	5¢	6¢
E	7¢	8¢	10¢
F	13¢	15¢	18¢
G	22¢	25¢	35¢
H	40¢	50¢	60¢
I	65¢	75¢	$1
J	$1.25	$1.50	$2
K	$2.50	$3	$3.75
L	$4.25	$5	$6
M	$7	$8	$10
N	$13	$15	$18
O	$22	$25	$35+

NOTE: Costs may vary from order to order due to order quantities, vendor, etc.

++ RELIABILITY CODES

USAGE/YR	CODE
≥10	1
≥100	2
≥1 000	3
≥10 000	4
≥100 000	5
≥1 000 000	6
≥10 000 000	7

FAILURE FREQ	CODE		%/YR (median)
1/100 000	A	=	.001
1/50 000	B	=	.002
1/20 000	C	=	.005
1/10 000	D	=	.01
1/5 000	E	=	.02
1/2 000	F	=	.05
1/1 000	G	=	.1
1/500	H	=	.2
1/200	I	=	.5
1/100	J	=	1.0+

FOR FURTHER EXPLANATION OF THIS CODE, SEE PAGE 13-18.

SEMICONDUCTOR DEVICE, DIODE (CONT)

RECTIFIER BRIDGES

MAX I_{AVG} (A)	WORKING VOLTAGE (V)	MAX I_{SRG} (A)	CASE STYLE	JEDEC OR VENDOR NUMBER	PART NUMBER	** ND	CC	†† RC	OTHER
.75	200	50	Fig 6	W02M-30	152-0585-00	A	G	4D	
.75	200	50	Fig 6	RW02M	152-0779-00	A	H+		Fast Recovery
.75	800	50	Fig 6	W08M-11	152-0666-00	A	G+	4E	
1.	200	50	Fig 3	ZKBP02-8	152-0488-00	A	G+	5F	
1.	600	60	Fig 3	KBP06-4	152-0497-00	A	H-	3E	
1.	200	25	Fig 5	66-8039	152-0199-00	N	J-		
1.5	400	25	Fig 5	SBR4	152-0200-00	N	I+	4F	
1.5	600	40	Fig 5	66-8382	152-0232-00	N	J		
2.5	50	100	Fig 1 or 2	KBL005-8	152-0556-00	A	I+	4F	
2.5	50	100	Fig 2	SDA10271K	152-0556-01	A	J		With Mounting Hole
2.5	200	100	Fig 1 or 2	KBL02-8	152-0462-00	A	I+	4D	
2.5	200	100	Fig 2	MDA970-3	152-0462-02	A	J		With Mounting Hole
2.5	200	100	Fig 1 or 2	RKBL02-14	152-0462-01	N	K		Medium Recovery
3.	200	100	Fig 9	W675 Fmly	152-0406-00	A	I+	4G	
3.	400	100	Fig 9	VH447	152-0396-00	N	I+	2I	
3.	400	100	Fig 9	KBPC604-1	152-0396-01	A	M-	4H	
3.	600	125	Fig 9	RKBPC606	152-0750-00	A	J+		Fast Recovery
6.	200	125	Fig 9	KBPC802	152-0668-00	A	J-	4G	
6.	400	125	Fig 9	KBPC804	152-0769-00	A	J-	3F	
12.	50	300	Fig 4	SDA10211	152-0475-00	A	J	4D	
12.	100	300	Fig 4	SDA10339	152-0535-00	N	K-		
12.	200	300	Fig 4	SDA10266	152-0557-00	A	J+	3G	
15.	50	150	Fig 8	SCPA05	152-0618-00	A	K-		Half-wave Bridge + Output
15.	100	150	Fig 8	689-1P	152-0799-00	A	L-		Fast Recovery, Half-wave
25.	500	250	Fig 7	R155	152-0384-00	N	M+		Assembly
30.	50	300	Fig 4	K019	152-0518-00	A	K-	4G	
35.	400	400	Fig 4	SDA10388K	152-0713-00	A	J+	3E	

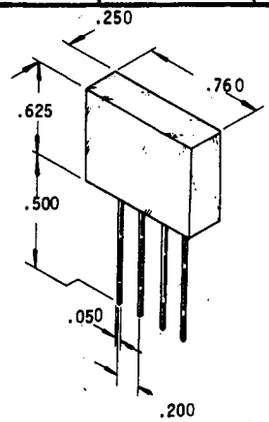

FIG 1

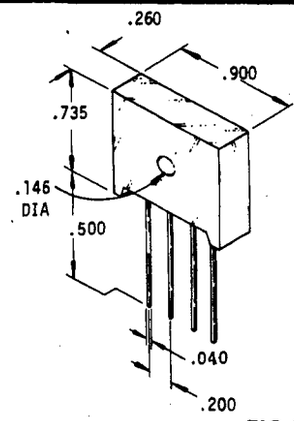

FIG 2

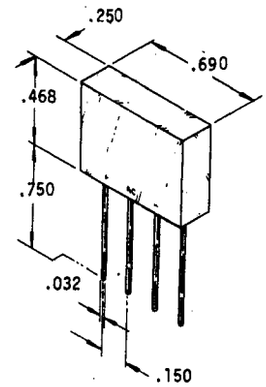

FIG 3

PART NUMBER	A	B	C	D
152-0518-00	.375	.710	.870	.165
152-0475-00	.520	.950	1.370	.180
152-0535-00	.520	.950	1.377	.180
152-0557-00	.520	.950	1.377	.180
152-0713-00	.520	.950	1.377	.180

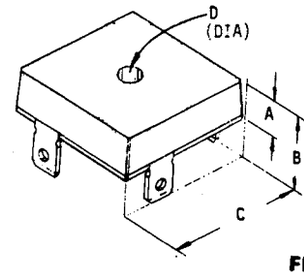

FIG 4

	A	B	C	D
Pkg A	.85	.565	.285	.25
Pkg B	.70	.560	.220	.40
Pkg C	1.70	.45	.210	.37

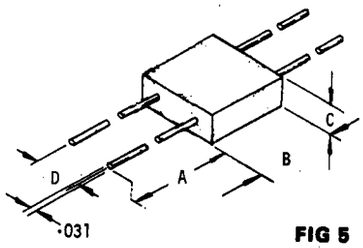

FIG 5

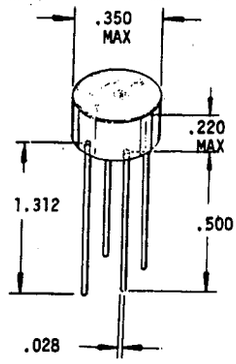

FIG 6

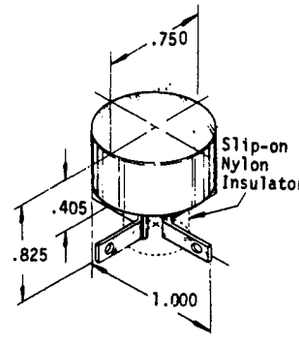

FIG 7

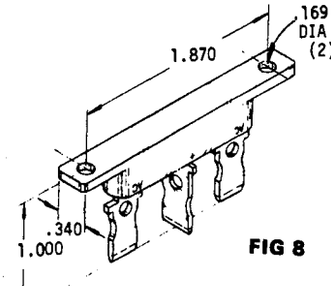

FIG 8

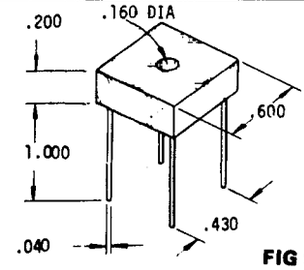

FIG 9

** NEW DESIGN CODE FROM COMPONENT ENGINEERING:

A = Acceptable

N = Not Recommended

NOTE: Those rectifiers not to be used are on page 12-9.

†† FOR RELIABILITY CODES, SEE PAGE 12-3.

SEMICONDUCTOR DEVICE, DIODE (CONT)

RECTIFIER (SILICON)

MAX I_{AVG} (A)	WORKING VOLTAGE (V)	MAX I_{SRG} (A)	MAX I_R @ V_{WRG} (mA)	MAX V_F (V) @ I_F (A)	† CASE STYLE	JEDEC OR VENDOR NUMBER	ΔΔ MID	PART NUMBER	** ND	CC	†† RC	OTHER
3m	12 k	5	.001	25 - .005	A1zv	ESJA25-12		152-0787-00	A	H		Must be Potted above 3kV
5m	10 k	3	.004	14 - .005	A1ug	SA2055		152-0408-00	A	J-	4D	
5m	12 k	3	.004	25 - .005	A298j	VG-12X		152-0409-00	N	I-	5E	Must be Potted above 3kB
10m	5 k	3	.002	14 - .010	A298j	VG-5X-905		152-0429-00	A	H	5E	
10m	10 k	2	.0005	20 - .010	A1xj	MX100		152-0639-00	A	H+	5C	Must be Potted above 3kV
25m	1.5k	3	.001	4 - .025	A83a	1N4441 Fmly		152-0170-00	A	H	5F	
30m	800	5	1.	2 - 30m	Not shwn	SF-1		152-0331-00	N	H-	4E	
50m	5 k	3	.001	13 - .050	A48BK	7701-54		152-0192-00	A	J	3G	
100m	2 k	3	.005	5 - .100	A298m	VB20		152-0385-00	A	H+	4F	
400m	400	10	.002	1 - .400	A1	1N647 Fmly	✓	152-0107-00	N	D+	5E	
400m	400	10	.001	1 - .400	A1	G727	✓	152-0107-03	N	E	5D	Medium Recovery
400m	400	10	.001	1 - .400	Not shwn	GPD011	✓	152-0107-04	N	E		Slow Recovery
400m	400	10		1 - .400	A1	1N647 Fmly		152-0426-00	N	F	5G	6pF Max @ 8 V_R use 152-0107-03
500m	600	30	.005	1.2 - .500	A94g	RGP10J-011	✓	152-0586-00	A	G-	5D	Fast Recovery, 750 nS
.5	600	30	.005	1.2 - .500	DO-41	RGP10J-005	✓	152-0586-01	A	G		trr = 750 nS Max, Low I_R
1	20	100	1.	.45 - 1.	A59	1N5817		152-0581-00	A	H-	4D	Schottky
1	100		.01	1.1 - 1.	U10	A4D4002		152-0801-00	A			Chip
1	150	35	.002	.875 - 1.	DO-41	MUR115	✓	152-0601-00	A			Fast Recovery, 25 nS
1	200	30	.005	1.1 - 1.	A59	1N4935	✓	152-0398-00	A	E+	5C	Fast Recovery, 200 nS
1	200	30	.01	1.1 - 1.	A59	MR812	✓	152-0414-00	A	E+	5A	Fast Recovery, 750 nS
1	400	20	.01	1.5 - 1.	A59	UES1106	✓	152-0808-00	A	J-		Fast Recovery, 50 nS
1	400	30	.005	1.1 - 1.	A59	1N4936	✓	152-0400-00	A	E+	5E	Fast Recovery, 200 nS
1	400	30	.01	1.1 - 1.	A59	MR814 Fmly		152-0413-00	N	E+	5D	Fast Recovery, 750 nS
1	400	40	.01	1.2 - 1.	Not shwn	1N4004G	✓	152-0066-01	N	C	5D	Medium Recovery, 2 µS
1	400	40	.01	1.2 - 1.	DO-41	1N4004G	✓	152-0066-03	A	D	4H	
1	400	50	.01	1.1 - 1.	DO-41	1N4004G	✓	152-0066-00	A	D+	6D	
1	600	50	.01	1.2 - 1.	DO-41	1N4005G	✓	152-0040-00	A	C	5F	
1	800	30	.002	1.3 - 1.	DO-41	1N4947		152-0674-00	A	I+	3F	Fast Recovery, 250 nS
1	800	50	.01	1.2 - 1.	DO-41	S8M Fmly	✓	152-0353-00	A	E-	4G	
1	1000	30	.01	1.1 - 1.	DO-41	1N4007G		152-0704-00	A	D		
1	1600	30	.01	1.1 - 1.	A59	MRI-1600		152-0752-00	A	H-	3E	Medium Recovery
2	600	65	.005	1.1 - 2.	A399	GP20J-009	✓	152-0782-00	A	F+	5F	
3	20	250	2.	.47 - 3.	A282	1N5820		152-0582-00	A	I-	4E	Schottky
3	40	80	2.	.5 - 3.	A282	SKS002		152-0670-00	A	I+		Schottky
3	50	80	.01	1. - 4.		DSR5050		152-0672-00	A	J+		Fast Recovery, 25 nS
3	100	110	.005	1.1 - 5.	A249	A115AX39		152-0655-00	A	H	5E	trr = 200 nS Max
3	100	110	.005	1.1 - 9.	A249	SRSFR310		152-0655-01	N	H	4E	Small lead diameter
3	150	80	.15	1.1 - 5.		BYV28		152-0814-00	A			
3	200	150	.001	1. - 3.	A249g	SS4986		152-0198-02	A	H		Small lead diameter
3	200	300	.005	1.1 - 5.	A249	1N5624		152-0198-00	A	G	5D	Small Glass Case
3	200	300	.5	.9 - 3.	A179a	1N4721		152-0198-01	N	I-	4E	Motorola only, Metal Case
3	400	125	.005	1.1 - 5.	A248j	1N5625		152-0676-00	A	G	4D	
3	600	100	.3	1.25 - 3.	A282	MR856		152-0661-00	A	H	4E	Fast Recovery, 200 nS
3	1000	100	.01	1.25 - 3.	A399a	MR918 Fmly		152-0789-00	A	I-	4E	Fast Recovery, 750 nS
3	1000	125	.005	1.1 - 5.	A248j	GP30M-008		152-0706-00	A	I+	3F	Medium Recovery, 3 µs
5	100	300	1.	1.1 - 5.	A264	MR821 Fmly		152-0686-00	A	I	4D	Fast Recovery, 200 nS
5	200	300	.025	1.1 - 5.	A264	MR822 Fmly		152-0784-00	A	I		Fast Recovery, 200 nS
5	600	110	1.	1.1 - 5.	A264	MR826		152-0768-00	A	I+		Fast Recovery, 200 nS
6	100	40	.01	1.7 - 5.	TO-220	TIR102A		152-0718-00	N	I		
6	100	400	.25	1.25 - 100.	A264	MR751		152-0659-00	A	G+	4D	
7	100	80	.01	1.3 - 20.	TO-220	BYW29-100		152-0720-00	A	I		Fast Recovery, 50 nS
7	150	80	.01	1.3 - 20.	TO-220	UES1403		152-0810-00	A	I+		Fast Recovery, 50 nS
8	40	380	5.	.7 - 16.	A399a	80 SQ040		152-0754-00	A	J-	4E	Schottky
10	30	120	2.5	.55 - 5.	TO-220	95-4269		152-0794-00	A	J		Schottky, Dual, Common Cathode
12	100	200	.025	1. - 12.	DO-4	1N3890 Fmly		152-0397-00	A	I+		Fast Recovery, 200 nS
12	100	200	1.3	1.3 - 50.	DO-4	BYW30-100U		152-0721-00	A	K	4F	Fast Recovery, 50 nS
12	100	200	3.	1.18 - 20.	DO-4	1N3890R		152-0742-00	A	I+		Fast Rec., 200 nS; Anode is Stud
12	100	200	10.	1.2 - 12.	DO-4	1N1200 Fmly		152-0274-00	A	H	4E	
12	300	200	.5	1. - 12.	DO-4	1N1203		152-0479-00	A	I+		
15	35	120	.1	.84 - 15.	TO-220	MBR1535CT		152-0600-00	A	I+		Schottky, Dual, Common Cathode
15	100	250	1.	1.5 - 40.	DO-5	1N3209		152-0088-01	A	I+		
25	20	800	20.	.44 - 25.	DO-4	1N5829		152-0540-00	N	K-	3J	Schottky
25	40	250	20.	.055 - 15.	Not shwn	ESAD83-004		152-0793-00	A	L		Schottky, Dual, Common Cathode
30	20	500	10.	.64 - 15.	TO-3	SKS017		152-0692-00	A	K		Dual, Common Cathode, Schottky
30	35	600	20.	.7 - 30.	DO-4	SD-4101		152-0640-00	A	J+	4G	Schottky
30	40	500	10.	.56 - 8.	TO-3	SD-241		152-0762-00	A	L	3F	Dual, Common Cathode, Schottky
30	100	250	1.	1.2 - 15.	TO-3	R711A		152-0729-00	N	J+		Dual, Common Anode
50	40	800	250.	.86 - 50.	DO-5	1N6098		152-0714-00	A	L-	5F	Schottky
60	35	800	50.	.7 - 60.	DO-5	SD51		152-0642-00	A	K-	3F	Schottky
150	100		25.	.91 - 100.	DO-30	1N3085		152-0028-00	A	N		

ΔΔ PURCHASED ON TAPE AND REEL FOR MACHINE INSERTION.
† FOR CASE DRAWINGS, SEE PAGES 13-14 thru 13-16.

NOTE: THOSE RECTIFIERS NOT TO BE USED ARE ON PAGE 12-9.

** NEW DESIGN RECOMMENDATION FROM COMPONENT ENGINEERING
A - ACCEPTABLE
N - NOT RECOMMENDED

SEMICONDUCTOR DEVICE, DIODE (CONT)
VOLTAGE MULTIPLIERS

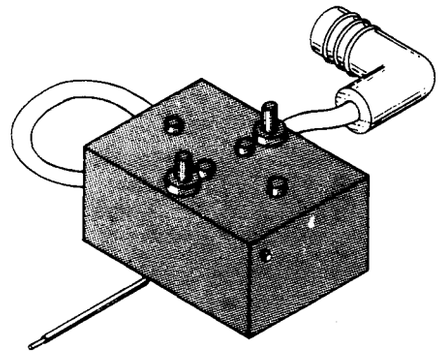

MULTIPLICATION FACTOR (MAXIMUM)	WORKING V_{IN} (AC, P-P)	NOM WORKING V_{OUT} (DC)	SERIES R (Ω)	L x W x H (INCHES)	MOUNTING	HV CONNECTION	PART NUMBER	** ND	CC	†† RC
1	7 kV	7 kV	7.8 M	1.6 x 1.3 x 1.1	Studs (Drilled & Tapped)	Straight	152-0584-00	A	M	3J
1	7 kV	7 kV	15.0 M	3.3 x 1.5 x .6	Threaded Studs	Straight	152-0682-00	A	M+	3I
1.5	6.7 kV	10 kV	1.5 M	1.2 x 1.1 x 1.1	Threaded Studs	Right Angle	152-0634-00	A	M+	3J
1.5	6.7 kV	10 kV	1.5 M	1.5 x 1.1 x 1.0	Wire Terminals	Special Spade Terminal	152-0637-02	A	M	4J
1.5	6.7 kV	10 kV	3.0 M	2.5 x 2.1 x 1.1	Wire Terminals	Right Angle	152-0635-00	A	N+	3J
1.5	7 kV	10.5 kV	1.5 M	1.26x 1.0 x 1.0	Wire Terminals	Straight	152-0660-00	A	M+	2J
2	4 kV	8 kV	6.0 M	2.6 x 1.85x 1.0	Threaded Studs	Right Angle	152-0652-00	A	N	3G
2	4 kV	8 kV	1.0 M	1.0 x 1.0 x 1.85	Wire Terminals	Special Spade Terminal	152-0791-00	A	M	4G
2	7.5 kV	15 kV	1.5 M	2.6 x 1.5 x 1.2	Threaded Studs	Straight	152-0495-00	A	N-	3H
2	7.5 kV	14.4 kV	1.5 M	2.6 x 1.5 x 1.1	Threaded Studs	Wire Lead	152-0495-01	A	O	
2	7.5 kV	15 kV	1.0 M	2.0 x 1.2 x 1.0	Wire Terminals	Right Angle	152-0703-00	A	M+	
2	8 kV	16 kV	20.0 k	2.7 x 1.5 x 1.3	Threaded Studs	TV	152-0771-00	A	O-	3H
2	8.2 kV	16 kV	1.5 M	2.3 x 1.5 x 1.2	Studs (Tapped)	Straight	152-0587-00	A	M+	3I
2.5	6 kV	15 kV	1.0 M	2.6 x 1.5 x 1.1	Special	Special	152-0797-00	A	N+	
3	4 kV	12 kV	1.0 M	2.5 x 1.8 x 1.1	Wire Terminals	Right Angle	152-0598-00	A		
3	4 kV	12 kV	1.0 M	1.0 x 1.0 x 1.9	Threaded Studs	Right Angle	152-0806-00	A	N-	
3	4.7 kV	14 kV	1.0 M	3.0 x 2.0 x 1.0	Wire Terminals	Straight	152-0805-00	A	O+	
3	5 kV	15 kV	510.0 k	2.6 x 1.8 x 1.2	Threaded Studs	Right Angle	152-0552-00	A	N-	4I
3	5.4 kV	16 kV	1.0 M	2.3 x 1.8 x 1.0	Wire Terminals	Straight	152-0767-00	A	O	4G
3	6 kV	18 kV	510.0 k	2.6 x 1.8 x 1.2	Threaded Studs	Right Angle	152-0552-01	A	N	3G
								100% Burn-In		
3	7 kV	21 kV	10.0 k	2.6 x 2.0 x 1.3	Threaded Studs	TV	152-0712-00	A	O+	3J
5	2.5 kV	12.5 kV	100.0 M	2.5 x 1.9 x 1.0	Threaded Studs	Straight	152-0687-00	A	O	2I
6	3 kV	18 kV	10.2 M	2.5 x 1.9 x 1.0	Threaded Studs	Right Angle	152-0509-00	A	O	3F
7	3 kV	21 kV	10.0 M	2.25x 2.25x 1.0	Threaded Studs	Right Angle	152-0493-00	A	O	3J
7	3 kV	21 kV	10.0 M	2.6 x 2.08x 1.8	Threaded Studs	Right Angle	152-0716-00	A	O-	3F

COST CODE
(CC COLUMN)

CODE	≈ VALUE with -	≈ VALUE no suffix	≈ VALUE with +
A	.2¢	.5¢	.75¢
B	1.25¢	1.5¢	2¢
C	2.5¢	3¢	3.75¢
D	4.25¢	5¢	6¢
E	7¢	8¢	10¢
F	13¢	15¢	18¢
G	22¢	25¢	35¢
H	40¢	50¢	60¢
I	65¢	75¢	$1
J	$1.25	$1.50	$2
K	$2.50	$3	$3.75
L	$4.25	$5	$6
M	$7	$8	$10
N	$13	$15	$18
O	$22	$25	$35+

NOTE: Costs may vary from order to order due to order quantities, vendor, etc.

†† CATALOG RELIABILITY CODES

USAGE/YR	CODE
≥10.	1
≥100	2
≥1 000	3
≥10 000	4
≥100 000	5
≥1 000 000	6
≥10 000 000	7

FAILURE FREQ	CODE		%/YR (median)
1/100 000	A	=	.001
1/50 000	B	=	.002
1/20 000	C	=	.005
1/10 000	D	=	.01
1/5 000	E	=	.02
1/2 000	F	=	.05
1/1 000	G	=	.1
1/500	H	=	.2
1/200	I	=	.5
1/100	J	=	1.0+

For further explanation of this code, see page 13-18.

SEMICONDUCTOR DEVICE, DIODE (CONT)

SIGNAL AND SWITCHING

MAX WRK V	MIN BKN V	MAX AVG mA	MAX I_R µA @ VR_R V	MAX V_F V @ I_F mA	MAX C_o pF	REVERSE RECVRY t_{rr} ns I_F * - I_R mA	OTHER	ΔΔ MID	† CASE STYLE	JEDEC OR VENDOR NUMBER	PART NUMBER	** ND	CC	†† RC
							(SCHOTTKY)							
4			.25 - 3	.6 - 10	1.0		General Purpose, Low R_s, 4V		C132	SMV1110	152-0536-00	A	G-	4E
15	15		.1 - 10	.48 - 1	1.2		General Purpose, 15V		DO-35	ND4973	152-0322-00	A	F+	6D
							Matched Set of 16		DO-35		152-0322-01	A	L+	
20	20		.1 - 15	1. - 35	1.2		General Purpose, Hi Conduct.		DO-35	5082-2810	152-0725-00	A	H+	
25	25		.1 - 15	.45 - 1	2.0		General Purpose, 25V		DO-35	5082-2068	152-0457-00	A	H	5E
70	70		.2 - 50	.41 - 1	2.0		General Purpose, 70V		DO-35	5082-2800	152-0664-00	A	H	
5	6		.05 - 5	.6 - 1	.45		High Speed		DO-35	A2X1518	152-0723-00	N	L	
5	7		.1 - 5	.65 - 1	.7		High Speed		DO-35	MA4E119	152-0748-00	A	K+	
7	7		.002- 3	.65 - 1	.5		High Speed		DO-35	MA4E145	152-0803-00	A	L	
7	7		.002- 3	.65 - 1	.5		High Speed, Matched Pair		DO-35	MA4E145M2	152-0420-01	A	L+	
7	7		.002- 3	.65 - 1	.5		High Speed, Matched Quad		DO-35	MA4E145M4	152-0755-00	A	N-	
10	10	50					High Speed, Matched Pair		M709	ND4121M-3G	152-0525-00	N	N	
9	9		.015- 5	.75 - 1	.3		High Speed, Matched Pair				152-0471-01	N	O-	3J
4	4	15	.25 - 3	.6 - 10	1.0		SOT-23, 4V		SOT-23	MMBV101	152-0740-00	A		
50	50		.2 - 25	1.2 - 10			SOT-23, 50V		SOT-23	MMBD501	152-0766-00	N	G	
15	15		.1 - 8	.41 - 1	1.1		Chip, 15V		Chip	5082-0087	152-0710-00	A	H	
50	50		.2 - 25	1.2 - 10			Chip, 50V		Chip	MBDC501	152-0747-00	N		
6	7		.03 - 3	.65 - 1	.4		Chip, low C		Chip	MA4E424	152-0811-00	A	F+	
			.1 - 1	.50 - 1	1.0		Chip, Special Spec.		Chip	MA4E278	152-0798-00	N	K	
4	5		10. - 5	.4 - 1	.1		Beam Leads		A330	HP9645	152-0675-00	A	L+	4D
5	6		.015- 5	.7 - 1	.25		Beam Leads, Low I_R		A330	DMJ6777	152-0804-00	A	M+	3F
70	70	15	10. - 70	1. - 15	2.0		Beam Leads, 70V		A330	QSCH-1608	152-0685-00	A	N	K
4	4		10. - 4	.475- 1	.2		Beam Leads, Series Pair		A330t	QSCH-5806	152-0770-00	A	N	
		10		.3 - 1	.7		Ring Quad		M491g	D5847A	152-0609-00	A	O-	
							Ring Quad		M491g	5082-6878	152-0609-01	A	M	
		30		.5 - 1	1.0		Ring Quad, Crossover		M491g	ND487C2-3P	152-0715-00	N	K-	
55		10		.55 - 1	.3		Ring Quad, Beam Leads		Chip	MA40487	152-0812-00	A	K+	
							(SILICON)							
							H.F. Mixer, KA Band		P1	1N53B	152-0362-00	N	M+	
							H.F. Mixer, KU Band		P1	MA4933B	152-0363-00	N	M	
							H.F. Mixer, K Band		P1	MA4934B	152-0364-00	N	N+	
10	15	50	.1 - 10	1.0 - 20	1.0	.75 10-10-1		✓	DO-7	FD7003	152-0153-00	N	F-	5C
30	40	150	.05 - 30	.55 - .1	2.0				DO-35	ZS142	152-0141-01	N		
30	40	150	.05 - 30	.88 - 20	2.0	2 E 10-6-1	Special Forward Recovery Spec		DO-35	1N4152 Fmly	152-0141-06	A	E-	
30	40	150	.05 - 30	.88 - 20	2.0	2 E 10-6-1		✓	DO-35	1N4152	152-0141-02	A	B	7B
30		150					*No markings on case*	✓	DO-35	1N4152 Fmly	152-0141-05	N	D+	
40	50		.01 - 5	1.0 - 20	2.0	4 I 10-10-1		✓	DO-7	DA2740	152-0245-00	A	E+	4A
40	50	200	100pA - 3	1.0 - 20	6.0	5000 I 20-.1		✓	DO-7	DE140	152-0246-00	A	E	5D
40	50	100	20pA - 20	1.1 -100	3.7	1000 I 10-10-1		✓	DO-7	DE102	152-0323-00	A	I+	5E
40	50	100	25pA - 20	1.25 -100	2.0	1000 I 10-10-1			DO-35	DE101	152-0323-01	A	J-	4C
40	50	100	50pA - 20	1.1 -100	3.7	1000 I 10-10-1			DO-7	DE103	152-0324-00	A	H+	4C
40	50	100	50pA - 20	1.1 -100	3.7	100 10-10-1			DO-7	DE133	152-0324-01	A	I+	
50	50	50	.1 - 40	1.0 - 10	5.0	6 10-6-1			Flip Chip	MMCFD914	152-0656-00	A	F-	
50	75	200	100nA - 50	1.0 -200	2.0	4 I 10-10-1	Chip		Chip	FDC3600	152-0701-00	N	F	
55	80	200	.1 - 55	1.1 -300	2.0	4 I 10-10-1		✓	DO-35	1N4610 Fmly	152-0333-00	A	D-	6C
70	70	100	.1 - 50	1.0 - 10	8.0	100 I 10-10-1	Monolithic Pr, Common Anode		TO-92	SSD2405	152-0501-00	N	F	
70	70	100	2.5 - 70	1.1 - 50	2.5	6 I 10-10-1	Pair, Common Anode		SOT-23	BAW56 Fmly	152-0735-00	A	F+	
70	70	100	5.0 - 70	1.1 - 50	1.5	6 I 10-10-1	Pair, Common Cathode		SOT-23	BAV70	152-0736-00	A	F	
70	70	100	2.5 - 70	1.1 - 50	1.5	6 I 10-10-1	Series Pair		SOT-23	BAV99	152-0731-00	A	G-	
80	100	75	.05 - 30	1.15 - 20	2.0	4 I 10-10-1		✓	DO-7	FDH1986	152-0233-00	A	E+	4D
100	100	130	.1 - 50	1.1 -100	1.5	4 I 10-10-1	Monolithic Pr, Common Cathode		TO-92	SSD1150	152-0307-00	N	F	
100	100	100	.25 - 20	1.0 - 10	4.0	4 I 10-10-1			SOT-23	MMBD914	152-0734-00	A		
120	120	150	.05 - 30	1.0 - 20	2.0	4 I 10-10-1		✓	DO-35	WG1308	152-0574-00	A	C	4G
175	200	100	5.0 -175	1.0 -100	4.0	700 S 20-1		✓	DO-35	FDH2161 Fmly	152-0061-00	A	C-	6E
200	225	100	5.0 -200	1.0 -100	4.0	700 S 20-1		✓	DO-35	PV120	152-0629-00	A	D-	
225	240	200	.05 -225	1.0 -100	10.0			✓	DO-7	1N486A Fmly	152-0242-00	A	D+	6F
265	280	200	.05 -265	1.0 -100	10.0				DO-7	TD13419	152-0751-00	A	F-	4H
							(GaAs)							
3	3		10.	.4 - 1	.015					60561200	152-0753-00	U	O+	
							(GERMANIUM)							
15	15	40	10. - 6	.4 - 5	2.5	150 S 20-.1		✓	DO-7	ED2007 Fmly	152-0071-00	N	E+	4C
22		40	10. - 6	.3 - 1		240 S 20-.5		✓	DO-7	G866	152-0075-00	N	E	5B
60	75	60	30. - 10	1.0 - 20				✓	A1	T12G or 1N34A Fmly	152-0008-00	N	E+	4D
125		100	35. - 30	1.0 - 50	1.2			✓	DO-7	1N634	152-0025-00	N	F-	

† FOR CASE DRAWINGS, SEE PAGES 13-14 THRU 13-16.
ΔΔ MACHINE INSERTABLE DIODE.
* E = t_{rr} TEST: I = CURRENT t_{rr} TEST: S = SPECIAL TEST CIRCUIT.
NOTE: SIGNAL & SWITCHING DIODES NOT TO BE USED ARE ON PAGE 12-11.

STATIC SENSITIVE

THIS APPLIES TO ALL DEVICES ON THIS PAGE WITH Δ BY PART NUMBER. (SEE PAGE 10-0 FOR EXPLANATION.)

SEMICONDUCTOR DEVICE, DIODE (CONT)

TEK MADE SCHOTTKY

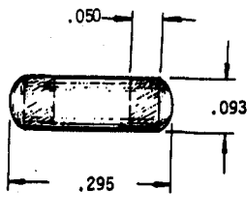

FIG A

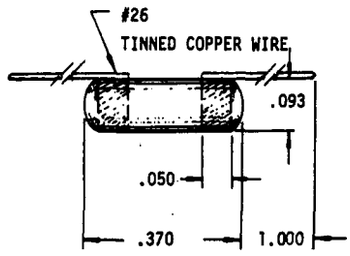

FIG B

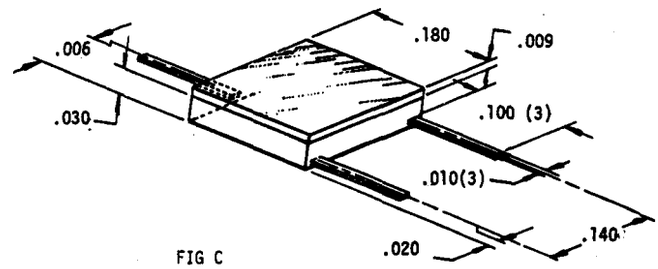

FIG C

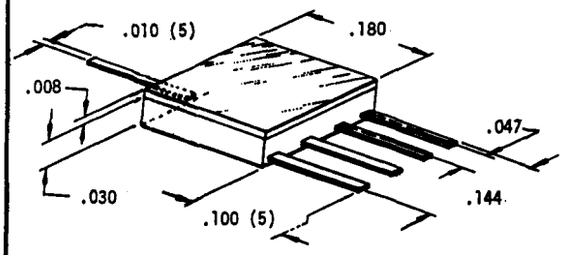

FIG D

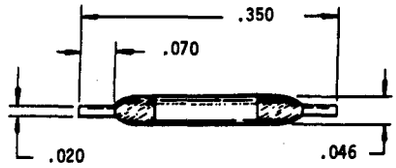

FIG E

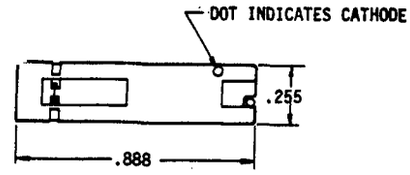

FIG F

$V_{(BR)}$ (V) MIN @ 2 µA, EXCEPT AS NOTED	I_R (nA) MAX @ 3.0V, 55°C EXCEPT AS NOTED	C (pF) MAX @ 0.V, 1. mHz EXCEPT AS NOTED	R_F (Ω) MAX @ 10 mA EXCEPT AS NOTED	MATCHING REQUIREMENTS	NO. OF DIODES	CASE FIG	PART NUMBER	** ND	†† RC
4. @ 4 µA		1.		V_F 5 mV (I_F = 5 mA)	2		152-0646-00	A	
5.		.8		V_F 5 mV (I_F = 20 mA)	2	Micro T	152-0646-02	A	
		DO NOT USE IN NEW DESIGN							
4.5	Not specified	.45	70.	V_F 70 mV (I_F = 10 mA)	2	C	152-0572-00	X	2I
5.	30.	.5	30.	R_F 3Ω (I_F = 10 mA)	2	A	152-0420-00	X	2J
5.	30.	.3	40.	R_F 5Ω (I_F = 10 mA)C = .04pF	2	A	152-0442-00	X	2I
5.	30.	.28	25.	R_F 5Ω (I_F = 10 mA)	2	A	152-0442-01	X	
5. @ 1 µA	60.	.6	12.Ω @ 20 mA	R_F 3Ω (I_F = 10 to 20 mA)	1	A	152-0458-00	X	
5. @ 1 µA	60.	.6	12.Ω @ 20 mA	R_F 3Ω (I_F = 10 to 20 mA)	1	B	152-0458-01	X	
6.	Not specified	.45	70.	V_F 70 mV (I_F = 10 mA)	4	D	152-0368-00	X	
7.	50. @ 25°C	Single .4	75.	R_F -4Ω of 10% @ I_F = 10 mA	2	F	152-0453-00	X	
	Room Temp.	Match .08		V_F ≤ 2.0V, match 50 mV					
8.	50.	.5	25.Ω @ 20 mA	R_F 3Ω (I_F = 20 mA)	2	A	152-0446-00	X	
8.	50. @ 2V	.8	30.	V_F 25 mV (I_F = 1 to 10 mA)	2	A	152-0463-00	X	
8. @ 1 µA	25.	.5	30.	V_F each pair 50 mV	4	E	152-0441-00	X	
				Pair - pair 60 mV					
				(I_F = 1 to 10 mA)					
9.	30. @ 5V	.4	60.	R_F 4Ω (I_F = 10 mA)C = .08pF	2	F	152-0471-00	X	
9. @ 2 µA	50. @ 5V	.30	100.	R_F 4Ω (I_F = 10 mA)	2	F	152-0482-00	X	
9. @ .1 µA	30. @ 5V	.3	70.	Special Matching Requests	2	C	152-0631-00	X	

†† CATALOG RELIABILITY CODES

USAGE/YR	CODE
≥10	1
≥100	2
≥1 000	3
≥10 000	4
≥100 000	5
≥1 000 000	6
≥10 000 000	7

FAILURE FREQ	CODE		%/YR (median)
1/100 000	A	=	.001
1/50 000	B	=	.002
1/20 000	C	=	.005
1/10 000	D	=	.01
1/5 000	E	=	.02
1/2 000	F	=	.05
1/1 000	G	=	.1
1/500	H	=	.2
1/200	I	=	.5
1/100	J	=	1.0+

For further explanation of this code, see page 13-18.

SYMBOLS:

$V_{(BR)}$ Reverse Breakdown Voltage

I_R Reverse Leakage Current

C Capacitance

r_F Forward Resistance

** NEW DESIGN CODE:

A = Acceptable

X = Do Not Use

STATIC SENSITIVE

THIS APPLIES TO ALL DEVICES ON THIS PAGE

MATCHED OR SELECTED DIODES

FINISHED PART NUMBER	ND **	CC	RC ††	RAW PART NUMBER	CHARACTERISTICS
152-0109-00	N	H		(2) 152-0141-02	1. V_F @ 100μA between 460 - 540mV matched within 10mV 2. V_F @ 10μA between 380 - 440mV matched within 10mV
152-0111-00	X	L		(2) 152-0071-00	1. $V_F \geq 115mV \leq 125mV$, I_F = 10μA matched within 4mV 2. $V_F \geq 280mV \leq 300mV$, I_F = 1mA matched within 10mV
152-0177-00	N	M+	4I	152-0177-01	1. $I_P \geq 9mA \leq 11mA$ 2. $V_P \leq 120mV$ 3. $I_V \leq 1.4mA$
152-0178-00	N	H+		(2) 152-0061-00	Non-sorted pair with Heat Sink
152-0316-00	X	I+		(1) 153-0031-00	Matched pair 152-0249-00 potted in temp stabilizer
152-0322-01	A	L+	6D		16 Schottky barrier diodes matched for V_F of 10mV at .5mA
152-0383-01	N	O+		152-0383-00	Switching time ≤ 35pS
152-0383-02	N	O+		152-0383-00	Switching time ≤ 37pS
152-0474-00	N	J-		(2) 152-0428-00	V_Z selection to 237V ± 5V I_Z 100μA
153-0004-00	U	L+		152-0299-00 152-0298-00	V_Z = 334V ± 2V @ I_{ZT} = 1mA
153-0006-00	U			152-0288-00	$I_R \leq 0.1mA$ and $V_Z \geq 126V \leq 154V$ @ I_{ZT} = 1mA
153-0007-00	X			152-0066-01	$t_{rr} \leq 12\mu$ sec @ I_F = 200mA I_R = 10mA
153-0008-00	X			152-0040-00	$t_{rr} \leq 30\mu$ sec @ I_F = 200mA I_R = 1mA
153-0009-00	U	K		152-0297-00	V_Z selected for (102V - 108V) @ I_{ZT} = 1mA
153-0010-00	U	M+		(2) 152-0298-00 (2) 152-0297-00	Set of 4 - (2) 152-0297-00 (V_Z = 110V) 4 total value = 490 ± 5V (2) 152-0298-00 (V_Z - 140V)
153-0020-00	X			152-0177-00	V_P = ≤ 100mV, I_P = ≥ 9mA ≤ 11mA
153-0024-00	X	J-		(2) 152-0202-00	Diode pair matched within 5mV @ .1mA and 5mA
153-0025-00	A	I+	3G	(2) 152-0153-00	Diode pair matched within 10mV @ I_F = 50μA within 5mV @ I_F = 1mA
153-0026-01	N	J+		(2) 152-0100-00	V_Z paired to 237V ± 5V @ I_{ZT} = 1mA
153-0028-00	X	J		(4) 152-0153-00	V_F (four diodes) matched within 5mV @ I_F = 1mA
153-0029-00	N	H+		(2) 152-0141-02	V_F pair selected to be within 5mV @ I_F = 3mA
153-0030-00	N	H+	3E	(2) 152-0280-00	Diode pair matched within 100mV @ 5mA I_Z
153-0031-00	N	I-		(2) 152-0233-00	Pair of diodes matched within 5mV, V_F @ I_F = 6mA
153-0032-00	A	J-		(2) 152-0322-00	Pair of diodes matched within 5mV, V_F @ I_F = 100μA
153-0033-00	X	I-		308-0439-00 152-0317-00 321-XXXX-00	V_Z measurement of 152-0317-00, $V_Z \geq 5.89 \leq 6.51V$ @ I_{ZT} = 7.5mA 1 Set - 1 - 152-0317-00 2 - 308-0439-00 2 - 321-XXXX-00
153-0033-01	X	K+		(1) 152-0317-00 (2) 308-0439-00 (2)	1. V_Z of diode ≥ 5.89V ≤ 6.51V @ I_{ZT} - 7.5mA 2. Check (2) 308-0439-00 for same value 3. Take (2) 321-XXXX-00 of same value so 308-0439-00 and 321-XXXX-00 equal diode value - 50.

MATCHED OR SELECTED DIODES (CONT)

FINISHED PART NUMBER	** ND	CC	†† RC	RAW PART NUMBER	CHARACTERISTICS
153-0034-00	X	F+	4F	(1) 152-0287-00	1. $I_R \leq 200\mu A$ @ Zener Knee 2. $V_Z \geq 95V \leq 115V$ @ $I_Z = 200\mu A$
153-0035-00	X			(2) 152-0249-00	Pair matched for $V_F \leq 10mV$ with $I_F \geq 20mA \leq 50mA$
153-0036-00	X			(1) 152-0275-00	$I_p \geq 45mA \leq 55mA$, $V_p = \leq 170mV$, $I_V = \leq 8.5mA$
153-0037-00	A	I+	3F	(2) 152-0322-00	Pair of diodes matched within 10mV, V_F @ $I_F = 8mA$
153-0038-00	X	M+		152-0140-01 and 100Ω to 250Ω 315-XXXX-00	Diode/Register matched for 200mV peak to peak waveform
153-0039-00	A	H-		(2) 152-0061-00	Diode pair matched within 5mV, V_F @ $I_F = .2mA$
153-0040-00	N	O+	1J	(1) 152-0383-01	TD Assembly, switching time ≤ 35pS
153-0040-01	N	O+	2J	(1) 152-0383-02	TD Assembly, switching time ≤ 37pS
153-0041-00	N	O+	2J	(1) 152-0383-02	TD Assembly 1. $I_p \geq 45mA \leq 56.5mA$ 2. $V_p \leq 230mV$
153-0044-00	A	J+		(4) 152-0322-00	Four diodes matched with 5mV @ $I_F = 1mA$
153-0044-01	A	J-		(2) 152-0322-00	Two diodes matched within 5mV @ $I_F = 1mA$ & within 10mV @ $I_F = 5mA$
153-0045-00	A			(2) 152-0322-00	Four diodes matched within 25mV @ 25μA I_F
153-0048-00	X	K-		(8) 152-0166-00	V_Z match 8 diodes within 20mV, V_Z @ $I_{ZT} = 2.5mA$
153-0049-00	A	K-		(6) 152-0166-00	V_Z match 6 diodes within 20mV, V_Z @ $I_{ZT} = 2.5mA$
153-0051-00	N	I+	3E	(4) 152-0061-00	Four diodes matched within 5mV, V_F @ $I_F = 12mA$
153-0052-00	N	I		(4) 152-0414-00	Four diodes matched within 50mV, V_F @ $I_F = 500mA$
153-0053-00	A	J+		(4) 152-0322-00	1. $I_R \leq 20nA$ @ $V_R = 3V$ 2. 4 diodes matched within 1nA, I_R @ $V_R = 3V$
153-0054-00	N	I+		(1) 153-0158-00	$V_Z \leq 50mV$ @ $I_Z = 10\mu A$ to 100μA (Machine inserted diode)
153-0055-00	A	I		(4) 152-0141-02	Set of 4 diodes matched within 5mV in V_F @ $I_F = .75mA$
153-0056-00	N	J		(1) 152-0427-00	1. V_Z @ 50μA ≥ 97V 2. V_Z @ 1mA, 102V ± 2%
153-0057-00	N	G-	4E	(1) 152-0246-00	$I_R \leq 50pA$ @ $V_R = 10V$
153-0058-00	A	G		(1) 152-0166-00	Selected, 6.7V ± 5% @ 5mA, V_Z = 50mV Max from 10μA to 100μA I_Z (Machine inserted diode)
153-0059-00	N	F	3F	(1) 152-0226-00	Selected 4.75V ± 5% @ $I_{ZT} = 5mA$
153-0060-00	X	H-		(1) 152-0317-00	$V_Z = 6.2 \pm 2\%$, V @ $I_{ZT} = 7.5mA$ (Machine inserted diode)
153-0061-00	X	L	3H	(1) 152-0321-00	$I_R \leq .5pA$ @ $V_R = 3V$
153-0062-00	A	F		(1) 152-0175-00	$V_Z \geq 4.9V$ @ $I_{ZT} = 100\mu A$
153-0063-00	A	H		(2) 152-0127-00	V_Z matched within 50mV @ $I_{ZT} = 10mA$
153-0064-00	X	I-		(1) 152-0153-00	$I_R \leq 3nA$ @ $V_R = 10V$

** NEW DESIGN CODE FROM COMPONENT ENGINEERING:

A = Acceptable
N = Not Recommended
X = *Do Not Use*
U = Undefined

†† FOR RELIABILITY CODES, SEE PAGE 12-8.

MATCHED OR SELECTED DIODES (CONT)

FINISHED PART NUMBER	** ND	CC	†† RC	RAW PART NUMBER	CHARACTERISTICS
153-0065-00	A	H	4E	(2) 152-0246-00	V_F pair selected to be within 15mV @ I_F = 100μA
153-0066-00	A	G		(1) 152-0195-00	V_Z, 5V ± 2% @ I_{ZT} = 2mA
153-0067-00	A	I+		(2) 152-0212-00	V_F pair selected to be within 100mV @ I_{ZT} = 12mA
153-0068-00	A	J+		(3) 152-0153-02	1. Three diodes match within 5mV @ I_F = 3mA, V_F = 825mV Max. 2. Three diodes match within 20mV @ I_F = 15mA
153-0069-00	A	I	3G	152-0520-00	Matched pair each $V_Z \geq 11.4 \leq 12.6$, I_{ZT} = 15mA
153-0073-00	A	J+	2I	(2) 152-0153-02	Pair matched within 5mV @ I_F = 3mA, $V_F \leq$ 825mV Pair matched within 20mV @ I_F = 15mA

RELIABILITY CHECKED

PART NUMBER	** ND	CC	†† RC	RAW PART NUMBER	CHARACTERISTICS	TEST
152-0040-01	N	H		152-0040-00	Rectifier, Silicon, 600V, 1A	Burned In
152-0149-01	A	F-	3F	152-0149-00	Zener, Silicon, 10V, 5%, .4W	Tested
152-0153-02	N	G+		152-0153-00	Silicon, Switching, 10V, 50mA	Burned In
152-0168-01	U	G+		152-0168-00	Zener, Silicon, 12V, 5%, .4W	Burned In
152-0195-01	A	F		152-0195-00	Zener, Silicon, 5.1V, 5%, .4W	Tested
152-0226-01	A	F		152-0226-00	Zener, Silicon, 5.1V, 5%, .4W	Tested
152-0241-01	A	G		152-0241-00	Zener, Silicon, 33V, 5%, .4W	Burned In
152-0242-02	U	G+		152-0242-00	Rectifier, Silicon, 225V, 200mA	Burned In
152-0246-01	A	F+		152-0246-00	Silicon, Switching, 40V, 200mA	Tested
152-0304-01	A	F-		152-0304-00	Zener, Silicon, 20V, 5%, .4W	Tested
152-0333-02	A	F-		152-0333-00	Silicon, Switching, 55V, 200mA	Tested
152-0398-01	A	F+		152-0398-00	Rectifier, Silicon, 200V, 1A	Tested
152-0411-01	A	I		152-0411-00	Zener, Silicon, 9V, 5%, .5W	Burned In
152-0457-01	U	H+		152-0457-00	Schottky, Silicon, 25V	Burned In
152-0488-01	A	I+		152-0488-00	Rectifier Bridge, 200V, 1A	Burned In
152-0581-03	U	I+		152-0581-00	Schottky, Silicon, 20V, 1A	Burned In
152-0688-01	A	F		152-0688-00	Zener, Silicon, 2.4V, 5%, .4W	Tested

†† CATALOG RELIABILITY CODES

USAGE/YR	CODE
≥10	1
≥100	2
≥1 000	3
≥10 000	4
≥100 000	5
≥1 000 000	6
≥10 000 000	7

FAILURE FREQ	CODE		%/YR (median)
1/100 000	A	=	.001
1/50 000	B	=	.002
1/20 000	C	=	.005
1/10 000	D	=	.01
1/5 000	E	=	.02
1/2 000	F	=	.05
1/1 000	G	=	.1
1/500	H	=	.2
1/200	I	=	.5
1/100	J	=	1.0+

For further explanation of this code, see page 13-18.

COST CODE
(CC COLUMN)

CODE	≈ VALUE with -	≈ VALUE no suffix	≈ VALUE with +
A	.2¢	.5¢	.75¢
B	1.25¢	1.5¢	2¢
C	2.5¢	3¢	3.75¢
D	4.25¢	5¢	6¢
E	7¢	8¢	10¢
F	13¢	15¢	18¢
G	22¢	25¢	35¢
H	40¢	50¢	60¢
I	65¢	75¢	$1
J	$1.25	$1.50	$2
K	$2.50	$3	$3.75
L	$4.25	$5	$6
M	$7	$8	$10
N	$13	$15	$18
O	$22	$25	$35+

NOTE: Costs may vary from order to order due to order quantities, vendor, etc.

** NEW DESIGN CODE:

A = Acceptable
N = Not Recommended
U = Undefined

§§FOR STATUS CODES, SEE PAGE 12-10.

SEMICONDUCTOR DEVICE, DIODE (CONT)
RECTIFIER (SILICON)
DO NOT USE IN NEW DESIGN

PART NUMBER	JEDEC OR VENDOR NO.	§§ STATUS	CASE STYLE	MAX I_{AVG} (mA)	WORKING VOLTAGE (V)	MAX I_{SRG} (A)	MAX I_R @ V_{WRG} (mA)	MAX V_F (V)	@ I_F (mA)	OTHER
152-0002-00	1N3583	CS	A31a	100	1.5k	2.5	.001	.4	1	
152-0009-00		DL		500						Tekmade
152-0010-00		DL		500						Tekmade
152-0011-00	1N2070	NP	A38AH	750	400		10	1.1	500	
152-0011-01		NP		500						
152-0012-00	1N2071	NP	A1es	750	600		10	1.1	500	
152-0013-00		DL		500	600					Tekmade
152-0014-00		DL		500	800					Tekmade
152-0015-00		DL		500	1500					Tekmade
152-0017-00	1N789	OB	A46	120	30		1	1.0	10	
152-0023-00	SP209	NP		500	400					Replaced by 152-0047-00
152-0029-00	1N2024	CS	DO-5	10A	245	150		1.5	25	
152-0030-00	1N540	NP	DO-3	750	400		10	1.1	500	Replaced by 152-0066-00
152-0035-00	1N4998	CR	M176a	3A	100	300	.5	.9	3	
152-0036-00	1N1582	NP	DO-4	3000	100		500	1.5	6000	
152-0042-00	1N1581	CS	DO-4	3000	50		500	1.5	6000	
152-0046-00	1N691	DL	DO-7	400	80			1.0	400	
152-0047-00	1N2862	NP	DO-1	750	400		10	1.2	500	
152-0047-01		NP		750	400					Replaced by 152-0066-01
152-0048-00	1N2864	NP	DO-1	750	600	40	10	1.2	500	
152-0048-01	U214	NP	DO-1	750	600	40	10	1.2	500	Replaced by 152-0040-00
152-0049-00	1N2862	DL	DO-1	750	400	40	10	1.2	500	
152-0050-00	1N1566	OB		1500	400		5	1.2	500	
152-0051-00	1N1124	OB	DO-4	3000	200		10	1.1	1000	
152-0066-02	1N3194	DL		750	400	40	10	1.2	750	Replaced by 152-0066-01
152-0088-00	1N3209	CS	DO-5	15A	100	250m	1000	1.5	40A	
152-0107-02	1S113	DL								Unselected Pair
152-0113-00	40108	NP		10A	50		75	1.2	10A	Replaced by 152-0274-00
152-0128-00	1N3728	NP	A-21	200	550			1.0	200	
152-0162-00	1N1218	DL	DO-1	1600	100		1500	1.0	1600	
152-0180-00	UTR1112	CR		5A	100	30	.1	1.2	5A	Fast Recovery
152-0188-00	1N64	NP	DO-7	50	25	500m		1.0	3	Germanium
152-0208-00	1N3195	NP	A50	750	600	40		1.2	750	Replaced by 152-0040-00
152-0218-00	7715-10X	NP	A48BJ	20	10k	1000m		25	20	Replaced by 152-0408-00
152-0222-00	2202	NP		250						
152-0224-00	UTR166	CS	A224	200	300	10		1.0	100	
152-0248-00	1S023	CR	A89	1500	400		50	1.25	5	
152-0260-00	UBR261	OT		1.5A	100	15	2	2	.9A	Medium Recovery
152-0336-00	7715-15X	DL		5	15k	3000m		36.	5	
152-0399-00	SR1878	CR		3A	50	100	.05	1.1	3A	Fast Recovery, 200 nS
152-0400-01	1N4936	DL	A98	1000	40	30	5	1.1	1000	
152-0404-00		CS								Unselected, mounted on an alum. plate
152-0404-01	152-0384 Fmly	CR			25	500				
152-0408-01		DL								
152-0408-02	H345	OB		5	10k			14	5	
152-0412-00	SRT936	CR		3A	50	100	.075	1.4	3A	Fast Recovery, 1 µS
152-0418-00	1N4999	CR	M176a	3A	300	300	.5	.9	3A	
152-0423-00	1N5000	CR	M176a	.5	400	300	3	.9	3A	
152-0444-00		DL	TO-5	1600						
152-0478-00	652-634	NP		1500	600		2	1.1	500	
152-0491-00		CS		2.5	15					
152-0492-00	652-637	DL		1000	100	20	3	1.1	500	
152-0502-00	1N5823	CR	A179c	5A	20	500	10	.36	5A	Schottky
152-0529-00	MDA540A-1	OB		1000	25					Matched Pair
152-0530-00	MDA520A-7	OB		1000	600					Full Wave Bridge
152-0531-00	MDA902A-2	OB		1000	50					Full Wave Bridge
152-0533-00	VH148	OB		3000	100					Full Wave Bridge
152-0538-00	1N3880	OB	DO-4	6000	100		15	1.4	6000	
152-0560-00	1N5832	OB	DO-5	40A	20	800	20	.52	40A	Schottky
152-0568-00	SCAJ6F	OB		1500	600	9	2	1.3	1000	
152-0577-00	40891	NP								
152-0577-01	D2103S	NP	DO-1	3000	700	12	10	1.4	4000	
152-0613-00	1N4785	CS	TO-3	250	320	7	1	77	7A	
152-0633-00	1N5821	PP	A282	3A	30	250	2	.5	3	Schottky
152-0636-00	1N5824 Fmly	CR	A179c	5A	35	500	10	.38	5A	Schottky
152-0645-00	3L05	DL			3	50				
153-0007-00	152-0066-00	NP	A50							

NOTE: FOR LISTINGS OF RECOMMENDED PARTS, SEE PAGE 12-2.

SEMICONDUCTOR DEVICE, DIODE (CONT)

VOLTAGE MULTIPLIERS

DO NOT USE IN NEW DESIGN

PART NUMBER	VENDOR NO.	§§ STATUS	MULTIPLICATION FACTOR (MAX)	WORKING V_{IN} (AC, P-P)	WORKING V_{OUT} (DC)	SERIES R (Ω)	MOUNTING	HV CONNECTION
152-0498-00	SCMA10134	DL	4	4.75	18.0			None
152-0591-00	SCMA10379E	DL	2	5.00	9.8	.51	Threaded	Right Angle
152-0592-00	SCMA10377E	DL	2	6.00	12.0			
152-0593-00	CMX15	DL	2	5.00	-10. k			
152-0594-00	CMX155A	DL	1	2.50	2500			
152-0637-00	CMX232	NP	1.5	6.70	10	1.5 M	Wire Terminals	Special Spade Term.
152-0637-01	CMX232	NP	1.5	6.70	10	1.5 M	Wire Terminals	Special Spade Term.

NOTE: FOR LISTINGS OF RECOMMENDED PARTS, SEE PAGE 12-3.

MISCELLANEOUS

PART NUMBER	VENDOR NO.	CASE STYLE	§§ STATUS	DESCRIPTION
152-0003-00			EN	Missing Diode
152-0273-00			DL	Tab, Lead Spider, Missing Diode
152-0548-00			NP	Ph Si
152-0548-01			CR	Ph Si
152-0548-02			CS	Ph Si
152-0549-00			NP	Ph Si
152-0549-01			CR	Ph Si
152-0549-02			CR	Ph Si
152-0550-00			NP	Ph Si
152-0550-01			CR	Ph Si
152-0550-02			CR	Ph Si
152-0550-03			CM	Ph Si
152-0558-01			CR	Photo-optic potted
152-0564-00	21D17		CR	Ph 20 Sq. MM
152-0569-00			CR	Ph Si
152-0569-01			CR	Ph Si
152-0570-00			PP	Ph Si
152-0572-47			MP	Ph Si
152-0575-00			TC	LED
152-0588-00	PD10		OB	Ph
152-0620-00			CR	Photometric
152-0632-00		TO-8	CR	Ph 20 Sq. MM
152-0654-00			SC	Ph Ga As
152-0677-00		TO-18	DL	Ph WPN
153-0011-00			DL	
153-0012-00			DL	
153-0016-00			DL	

§§ STATUS CODES

CR	Current Production
§EN	Engineering
PP	Pre-Prod
§CS	Customer Service
§NP	Non-Prod
§CL	Cancelled
§DL	Deleted
§OB	Obsolete Instrument
CM	Custom Mod Instrument
§DS	Digital Systems
§OT	Obsolescent Instrument
MP	Modified Part
LR	Last Supply Current
LS	Last Supply Customer Service
VN	Vendor
TC	Telequipment Current Prod.
IN	International
SC	Sony/Tek Current Prod.

THE STATUS IN THIS CATALOG WAS CORRECT AT THE TIME IT WAS PUBLISHED, BUT IT IS SUBJECT TO CHANGE.

§ TO USE A PART WITH THIS STATUS ON A NEW INSTRUMENT REQUIRES THAT A NEW PURCHASED PART INITIATION FORM (PPIF) BE INITIATED.

(A GLOSSARY OF TERMS FOR THESE STATUS CODES CAN BE FOUND ON PAGE 0-44).

SEMICONDUCTOR DEVICE, DIODE (CONT)

SIGNAL & SWITCHING

DO NOT USE IN NEW DESIGN

PART NUMBER	JEDEC OR VENDOR NO.	§§ STATUS	CASE STYLE	MAX WRK V	MIN BKN V	MAX AVG mA	MAX I_R µA	@ VR_F V	MAX V_F V	I_F mA	C_o pF	REVERSE RECOVERY t_{rr} ns	I_F - I_R mA	OTHER
							(SILICON)							
152-0006-00	T13G	NP		150		3								
152-0045-00	1N662A	NP	DO-7	100	125	200	.001	9	1.	100	9	150	5	
152-0062-00	1N914	NP	DO-7	100		75	.025	20	1.	10	4	4	10 - 1	
152-0065-00	HD5000	NP		10	25	12	.200	5	1.	5	1	.5	10 - 1	
152-0072-00	1N3258	NP	A22	100		160	.025	20	1.	100	4	4	10 - 1	
152-0090-00	FD613	OB		35			.050	30	1.	100	2			
152-0092-00	HD5004	OB	DO-7	10	15	12	1.000	5	1.	2	1	.5	1 - 10	
152-0095-00	1N625	CS	DO-35	20	30	20	1.000	20	1.5	4	6			
152-0141-00	1N3605	NP	DO-7	30	40		.050	30	.55	.1	2	2	10 - 10	
152-0141-03	1N4152 Fmly	OT	DO-35	30										Trimmed, Gold Pl Leads
152-0141-04	1N4152	DL		30	40	150	.050	30	.55	.1	2			w/Clipped Leads
152-0143-00	1N999	NP	DO-7	75			.001	75	1.0	50	2	4	10 - 10	
152-0143-03		DL												
152-0151-00	152-0141-02	CR		30										Non-sorted pair in temp. stabilizer
152-0153-01	HP5082	NP	DO-35	10	15		.100	15	1.	20	1			Hot Carrier
152-0165-00	1N3579 Fmly	CR	DO-7	175	200	150	10p	3	1.	100				
152-0173-00	1N999	NP	DO-7	30	40	75	.001	5	1.	10	2	2	10 - 10	
152-0185-00	1N4152	NP	DO-35	30										Use 152-0141-02
152-0185-01	1N4152	NP	DO-35 only	30	40	150	.050	30	.55	.1	2	2	10 - 10	
152-0185-02	CD8204	NP	DO-7 only	30	40	150	.050	30	.55	.1	2	2	10 - 10	
152-0194-00	1N416D	OT	P-3											HF Mixer S Band
152-0196-00		DL	A90	5			15.	.5	.5	15				HF Mixer
152-0197-00	1N415D	CS	P3A											HF Mixer X Band
152-0202-00	1N82A Fmly	LR	DO-7	5		25	3000.	3	.5	9	1			HF Mixer, 1 GHz
152-0220-00	CG81H	NP					30.		1.	20				
152-0238-00	1N4442	NP	DO-35	30		200	.001	30	1.	100	3			
152-0239-00	DHD125	CS	A159	15			.010	15	1.	10	1			
152-0249-00	Tek Made	CR		80	100		200p	2	2	20	2	4	10-10-1	Series pair in temp. stabilizer
152-0256-00	1N78BMR	DL	P1B											Matched Pair HF Mixer KU Band
152-0315-00	MHG9008	EN	DO-7	40	50	150	.100	40	1.	100	2	2	10 - 1	
152-0321-00	FSA1480	CR	TO-72	30	35	100	10p	20	1.3	100	1.3	250	10-10-1	Series pair, case isolated
152-0323-02	DE101	DL	DO-35	35	50	100	25p	20	1.3	100	2	1000	10 - 1	
152-0367-00	FSA1544	DL	TO-18	30	30	100	20p	100	1.3	100	3.7	500	10-10-1	Case isolated
152-0454-00	FPE100	CS												Light Emitting Diode
152-0459-00		DL												Matched Pair
152-0505-00	A2S100	NP	Chip	3		30								Hot Carrier
152-0516-00	1N5297	NP	DO-7											
152-0558-00		NP		200	200		.500	10			225			Photo Diode w/Red LED filter
152-0596-00	UM6601A	DL		100	100		10.	100	.25	100	.4	1000		
152-0619-00	1N3070	DL	A398	200					1.	100		50	30 - 30	
153-0002-00	152-0026-00													Selected
153-0013-00		OB												Checked
153-0039-01		CR												Matched Pair w/Heat Sink
153-0039-02		DL												Matched Pair
153-0039-03		DL												Matched Pair
153-0046-00		CS												Matched Pair
							(SCHOTTKY)							
152-0717-00	6-6778-94	DL	A330	5	5				.55	1	.1			Beam Leads
							(GERMANIUM)							
152-0001-00	1N91	CS	DO-3	100		150	1350.	100	.22	150		50KHz MAX		
152-0005-00	T13G	CS	A1	25		70	2.	10	1.	40				
152-0007-00		NP	DO-7	25			10.	6	.3	1.	.6	400		
152-0026-00	Q6-100	CS	DO-7	5	6	100	100.	6	1.	100	1.	5	10 - 1	
152-0027-00	1N281	NP	DO-7	60	75	75	30.	10	1.	100				
152-0079-00	HD1841	NP	DO-7	20			20.	10	.45	10	1.5	6	10 - 3	
152-0110-00	ED2007	CS	DO-7	8	10	50	10.	5	.125	.01		200	20 - 1	
152-0111-00		CS	DO-7	8	10	50	10.	5	.125	.01	1.5	200	20 - 1	
152-0129-00	1N87A	CR	DO-7	20		8	10.	1.5	1.	.25				
152-0160-00	HD1872G	CS	DO-7	5	6	100	10.	2	1.	-100	1.25	100	20 - 1	
152-0186-00	1N198	OT	A21	80		30	10.	10	1.	4	1.			

NOTE: FOR LISTINGS OF RECOMMENDED PARTS, SEE PAGES 12-4 & 12-5.

SEMICONDUCTOR DEVICE, DIODE (CONT)
TEK MADE SIGNAL & SNAP-OFF
DO NOT USE IN NEW DESIGN

PART NUMBER	NUMBER OF DIODES	§§ STATUS	OTHER
152-0083-00		NP	
152-0084-00		NP	
152-0085-00		NP	
152-0106-00		DL	
152-0112-00		OB	
152-0114-00		NP	
152-0115-00		NP	
152-0115-01		NP	
152-0116-00		NP	
152-0117-00		NP	
152-0130-00		NP	
152-0131-00	Single	DL	
152-0138-00	Single	NP	
152-0144-00	Quad	DL	
152-0145-00	Single	NP	
152-0152-00	Single	NP	Replaced by 152-0446-00
152-0158-00		DL	Missing Diode
152-0161-00	Single	NP	Replaced by 152-0249-00
152-0163-00	Single	DL	
152-0164-00			
152-0183-00	Single	DL	
152-0184-00		NP	
152-0193-00	Pair	NP	
152-0201-00	Quad	NP	
152-0205-00	Single	NP	
152-0206-00	Single	NP	Replaced by 152-0457-00
152-0207-00		NP	
152-0209-00		NP	
152-0210-00		NP	
152-0211-00		NP	
152-0216-00		NP	
152-0219-00		NP	Replaced by 152-0249-00
152-0250-00		LS	
152-0251-00		LS	
152-0252-00		CR	
152-0257-00		NP	
152-0258-00		NP	
152-0259-00		NP	
152-0262-00	Single		
152-0263-00	Single	NP	
152-0313-00	Single	CR	
152-0313-01	Single	DL	
152-0313-02	Single	NP	
152-0313-03	Single	NP	
152-0314-00	Quad	CS	
152-0319-00		CS	
152-0320-00		CS	
152-0335-00		NP	
152-0360-00		NP	
152-0361-00		NP	
152-0425-00		CS	
152-0434-00	Single	OB	
152-0435-00	Single	DL	
152-0436-00	Single	DL	
152-0439-00	Pair	OB	
152-0443-00	Single	OB	
152-0445-00	Single	CR	
152-0446-01	Pair	OT	
152-0450-00	Pair	DL	
152-0452-00		CR	
152-0452-01		CR	
152-0465-00	Quad	OB	
152-0499-00		NP	
153-0014-00		OB	
153-0015-00		OB	
153-0022-00		NP	Selected 152-0112-00
153-0023-00		NP	Selected 152-0112-00

§§ FOR STATUS CODES, SEE PAGE 12-10

SEMICONDUCTOR DEVICE, DIODE

13

SECTION 13

TABLE OF CONTENTS

PAGE(S)

CROSS REFERENCE INDEXES
- TEK PART NUMBER TO VENDOR NUMBER INDEX ..... 13-2 THRU 13-10
- JEDEC NUMBER TO TEK PART NUMBER INDEX ..... 13-12 & 13-13

DIODE CASE DRAWINGS ..... 13-14 THRU 13-16

RELIABILITY NOTES 13-18

APPLICATION NOTES
- ZENER DIODES 13-19
- HOT CARRIER DIODES 13-20

HANDLING OF STATIC SENSITIVE COMPONENTS 13-21

NOTES ..... 13-11 & 13-17

COST CODE

(CC COLUMN)

CODE	A	B	C	D	E	F	G	H	I	J	K	L	M	N	O
≈ VALUE with +	.75¢	2¢	3.75¢	6¢	10¢	18¢	35¢	60¢	$1	$2	$3.75	$6	$10	$18	$35+
≈ VALUE no suffix	.5¢	1.5¢	3¢	5¢	8¢	15¢	25¢	50¢	75¢	$1.50	$3	$5	$8	$15	$25
≈ VALUE with -	.2¢	1.25¢	2.5¢	4.25¢	7¢	13¢	22¢	40¢	65¢	$1.25	$2.50	$4.25	$7	$13	$22

NOTE: Costs may vary from order to order due to order quantities, vendor, etc.

CATALOG WRITER: NANCY KING, EXT. 2582.

DIODE PART NUMBER INDEX

TEK PART TO VENDOR NUMBER

13

PART NUMBER	** ND	JEDEC OR VENDOR NO.	TYPE	INDEX CHAR.	§§ STATUS	PAGE NO.
152-0001-00	X	Ref. Only	Sig, Ge		OB	12-11
152-0002-00	X	Ref. Only	Rect, Si		CS	12-9
152-0003-00	X	Ref. Only	Misc.		EN	12-10
152-0004-00	X	Ref. Only	Zener		NP	11-4
152-0005-00	X	Ref. Only	Sig, Ge		CS	12-11
152-0006-00	X	Ref. Only	Sig, Ge		NP	12-11
152-0007-00	X	Ref. Only	Sig, Ge		NP	12-11
152-0008-00	N	G1409 ∞ HD2607A-R ∞ S3884G	Sig, Ge	60	CR	12-4
152-0009-00	X	Ref. Only	Rect, Si		DL	12-9
152-0010-00	X	Ref. Only	Rect, Si		DL	12-9
152-0011-00	X	Ref. Only	Rect, Si		NP	12-9
152-0011-01	X	Ref. Only	Rect, Si		NP	12-9
152-0012-00	X	Ref. Only	Rect, Si		NP	12-9
152-0013-00	X	Ref. Only	Rect, Si		DL	12-9
152-0014-00	X	Ref. Only	Rect, Si		DL	12-9
152-0015-00	X	Ref. Only	Rect, Si		DL	12-9
152-0016-00	X	Ref. Only	Zener		NP	
152-0017-00	X	Ref. Only	Rect, Si		OB	12-9
152-0018-00	X	Ref. Only	Zener		DL	11-4
152-0019-00	X	Ref. Only	Zener		OB	11-4
152-0020-00	X	Ref. Only	Zener		OB	11-4
152-0021-00	X	Ref. Only	Zener		OB	11-4
152-0022-00	A	1N3029 Famly SZ12815RL ∞ 1Y25	Zener	25	CR	11-2
152-0023-00	X	Ref. Only	Rect, Si		NP	12-9
152-0024-00	A	1N3024B	Zener	15	CR	11-2
152-0024-01	X	Ref. Only	Zener		DL	11-4
152-0025-00	N	1N634 G1471	Sign, Ge	125	CR	12-4
152-0026-00	X	Ref. Only	Sig, Ge		CS	12-11
152-0027-00	X	Ref. Only	Sig, Ge		NP	12-11
152-0028-00	A	1N3085 I.R.150L15	Sect, Br	150	LS	12-2
152-0029-00	X	Ref. Only	Rect, Si		CS	12-9
152-0030-00	X	Ref. Only	Rect, Si		NP	12-9
152-0031-00	X	Ref. Only	Zener		NP	11-4
152-0032-00	X	Ref. Only	Zener		DL	11-4
152-0033-00	X	Ref. Only	Zener		NP	11-4
152-0034-00	X	Ref. Only	Zener		NP	11-4
152-0035-00	X	Ref. Only	Rect, Si		CR	12-9
152-0036-00	X	Ref. Only	Rect, Si		NP	12-9
152-0037-00	X	Ref. Only	Zener		NP	11-4
152-0038-00	X	Ref. Only	Zener		NP	11-4
152-0039-00	X	Ref. Only	Zener		NP	11-4
152-0040-00	A	1N4005G GP10J-019 LG109 S6M	Rect, Si	1	CR	12-2
152-0040-01	N	SEN-R-253 GP10J-049	Rect, Si		PP	12-8
152-0041-00	X	Ref. Only	Tnl, Ge		NP	10-4
152-0042-00	X	Ref. Only	Rect, Si		CS	12-9
152-0043-00	X	Ref. Only	Tnl, Ge		NP	10-4
152-0044-00	X	Ref. Only	Zener		NP	11-4
152-0045-00	X	Ref. Only	Sig, Si		NP	12-11
152-0046-00	X	Ref. Only	Rect, Si		DL	12-9
152-0047-00	X	Ref. Only	Rect, Si		NP	12-9
152-0047-01	X	Ref. Only	Rect, Si		NP	12-9
152-0048-00	X	Ref. Only	Rect, Si		NP	12-9
152-0048-01	X	Ref. Only	Rect, Si		NP	12-9
152-0049-00	X	Ref. Only	Rect, Si		DL	12-9
152-0050-00	X	Ref. Only	Rect, Si		OB	12-9
152-0051-00	X	Ref. Only	Rect, Si		OB	12-9
152-0052-00	X	Ref. Only	Zener		OB	11-4
152-0053-00	X	Ref. Only	Zener		OB	11-4
152-0054-00	X	Ref. Only	Zener		OB	11-4
152-0055-00	A	1N962B DZ780417A SZG35009K1 Z5407	Zener	11	CR	11-1
152-0056-00	X	Ref. Only	Zener		CS	11-4
152-0057-00	X	Ref. Only	Zener		NP	11-4
152-0058-00	X	Ref. Only	Zener		NP	11-4
152-0059-00	A	1N3022 Fmly SZ50601RL	Zener	12.6	CR	11-2
152-0060-00	X	Ref. Only	Zener		NP	11-4
152-0061-00	A	FDH2161 PV120 Fmly	Sig, Si	175	CR	12-4
152-0062-00	X	Ref. Only	Sig, Si		NP	12-11
152-0063-00	X	Ref. Only	Tnl, Ge		NP	10-4
152-0064-00	X	Ref. Only	Zener		CS	11-4
152-0065-00	X	Ref. Only	Sig, Si		NP	12-11
152-0066-00	A	1N3194 Fmly GP10G-020 LG4016 ∞ FR 1076	Rect, Si	1	CR	12-2
152-0066-01	N	1N4004G GIG-002 S4M ∞ EM5175	Rect, Si	1	CR	12-2
152-0066-02	X	Ref. Only	Rect, Si		DL	12-9
152-0066-03	A	1N4004G GP10G-052 LG4017	Rect, Si	1	CR	12-2
152-0067-00	X	Ref. Only	Zener		NP	11-4
152-0068-00	X	Ref. Only	Zener		NP	11-4
152-0069-00	X	Ref. Only	Zener		DL	11-4
152-0070-00	N	BD4	Tunnel	5	CR	10-2
152-0071-00	N	ED2007 Fmly G865	Sig, Ge	15	CR	12-4
152-0072-00	X	Ref. Only	Sig, Si		NP	12-11
152-0073-00	X	Ref. Only	Tnl, Ge		DL	10-4
152-0074-00	X	Ref. Only	Tnl, Ge		NP	10-4
152-0075-00	N	G866 ∞ NPC075	Sig, Ge	22	CR	12-4
152-0076-00	X	Ref. Only	Zener		CS	11-4
152-0077-00	X	Ref. Only	Back		NP	10-4
152-0078-00	X	Ref. Only	Tunnel		CR	10-4
152-0079-00	X	Ref. Only	Sig, Ge		NP	12-11
152-0081-00	X	Ref. Only	Tnl, Ge		NP	10-4
152-0082-00	X	Ref. Only	Zener		DL	11-4
152-0083-00	X	Ref. Only	Sig, GaAs		NP	12-12
152-0084-00	X	Ref. Only	Sig, GaAs		NP	12-12
152-0085-00	X	Ref. Only	Sig, GaAs		NP	12-12
152-0086-00	X	Ref. Only	Zener		NP	11-4
152-0087-00	A	1N3044B SZ1627	Zener	100	CR	11-2
152-0088-00	X	Ref. Only	Rect, Si		CS	12-9
152-0088-01	A	1N3209 SR2099	Rect, Si		CR	12-2
152-0089-00	A	1N2976 Fmly SZ11501	Zener	12.6	CR	11-2
152-0090-00	X	Ref. Only	Sig, Si		OB	12-11
152-0091-00	X	Ref. Only	Zener		NP	11-4
152-0091-01	X	Ref. Only	Zener		DL	11-4
152-0092-00	X	Ref. Only	Sig, Si		OB	12-11
152-0093-00	X	Ref. Only	Tunnel		CS	10-4
152-0094-00	X	Ref. Only	Zener		NP	11-4
152-0095-00	X	Ref. Only	Sig, Si		CS	12-11
152-0096-00	A	SZ50600K	Zener	51	OB	11-2
152-0097-00	X	Ref. Only	Zener		NP	11-4
152-0098-00	N	STD916	Tunnel	10	CS	10-2
152-0099-00	X	Ref. Only	Tnl, Ge		NP	10-4
152-0100-00	A	1N3046B	Zener	120	CR	11-2
152-0101-00	A	1N3041B ∞ SZM25000K1	Zener	75	CR	11-2
152-0102-00	X	Ref. Only	Tnl, Ge		OB	10-4
152-0103-00	X	No info	Sig, GaAs		NP	
152-0104-00	X	Ref. Only	Zener		NP	11-4
152-0105-00	X	Ref. Only	Zener		CS	11-4
152-0106-00	X	Ref. Only	Sig, Si		DL	12-12
152-0107-00	N	1N647 Fmly G727 GPD-010 ∞ MR603 ∞ RS194	Rect, Si	400	CR	12-2

DIODE PART NUMBER INDEX (CONT)

TEK PART TO VENDOR NUMBER

ART NUMBER	** ND	JEDEC OR VENDOR NO.	TYPE	INDEX CHAR.	§§ STATUS	PAGE NO.
52-0107-02	X	Ref. Only	Rect, Si		DL	12-9
52-0107-03	N	G727	Rect, Si	400	CR	12-2
		∞ T160				
52-0107-04	N	GPD011	Rect, Si	400	CR	12-2
52-0108-00	U	4EX264	Shockly	46-54	CS	10-2
52-0109-00	N	CD700 Fmly	Mat or Sel		CS	12-6
52-0110-00	X	Ref. Only	Sig, Ge		CS	12-11
52-0111-00	X	Ref. Only	Mat or Sel		CS	12-6 & 11
52-0112-00	X	Ref. Only	Sig, Snap-Off		OB	12-12
52-0113-00	X	Ref. Only	Rect, Si		NP	12-9
52-0114-00	X	Ref. Only	Sig, Snap-Off		NP	12-12
52-0115-00	X	Ref. Only	Sig, Snap-Off		NP	12-12
52-0115-01	X	Ref. Only	Sig, Snap-Off		LS	12-12
52-0116-00	X	Ref. Only	Sig, GaAs		NP	12-12
52-0117-00	X	Ref. Only	Sig, GaAs		NP	12-12
52-0118-00	X	Ref. Only	Zener		NP	11-4
52-0118-02	X	Ref. Only	Zener		NP	11-4
52-0119-00	X	Ref. Only	Zener		NP	11-4
52-0120-00	A	1N3020B	Zener	10	CR	11-1
		SZ1619				
52-0121-00	u	No info			DL	
52-0122-00	X	Ref. Only	Zener		DL	11-4
52-0123-00	A	1N935A Fmly	Zener	9	CR	11-1
		DT1050				
		DT720623U				
		SZ11530RL				
		∞ 69-9061				
52-0124-00	A	1N938A	Zener	9	CR	11-1
		SZ50642				
52-0125-00	N	STD704	Tunnel	4.7	CR	10-2
52-0125-01	N	STD704	Tunnel	4.7	CR	10-2
52-0126-00	X	Ref. Only	Zener		CS	11-4
52-0127-00	A	1N958B	Zener	7.5	CR	11-1
		SZG35009K2				
		Z5347				
52-0128-00	X	Ref. Only	Rect, Si		NP	12-9
52-0129-00	X	Ref. Only	Sig, Ge		CR	12-11
52-0130-00	X	Ref. Only	Sig, GaAs		NP	12-12
52-0131-00	X	Ref. Only	Sig, Snap-Off		DL	12-12
52-0132-00	X	Ref. Only	Zener		DL	11-4
52-0133-00	X	Ref. Only	Zener		OB	11-4
52-0134-00	X	Ref. Only	Zener		CS	11-4
52-0135-00	X	Ref. Only	Zener		DL	11-4
52-0136-00	N	4EX363	Shockly	18-22	OB	10-2
52-0137-00	X	Ref. Only	Zener		CS	11-4
52-0138-00	X	Ref. Only	Sig, GaAs		NP	12-12
52-0139-00	X	Ref. Only	Zener		NP	11-4
52-0140-00	X	Ref. Only	Tnl, Ge		NP	10-4
52-0140-01	N	SMTD995	Tunnel	10	CR	10-2
		∞ MA4C163				
52-0141-00	X	Ref. Only	Sig, Si		NP	12-11
52-0141-01	N	ZS142	Sig, Si	30	NP	12-4
52-0141-02	A	1N4152 Fmly	Sig, Si	30	CR	12-4
		DA2527				
		DS06TRS4152				
		NDP0263				
		WG1464				
52-0141-03	X	Ref. Only	Sig, Si		LS	12-11
52-0141-04	X	Ref. Only	Sig, Si		DL	12-11
52-0141-05	N	1N4152 Fmly	Sig, Si	30	CR	12-4
		NDP373				
52-0141-06	A	DA2905	Sig, Si	30	CR	12-4
52-0142-00	X	Ref. Only	Zener		NP	11-4
52-0143-00	X	Ref. Only	Sig, Si		NP	12-11
52-0143-03	X	Ref. Only	Sig, Si		DL	12-11
52-0144-00	X	Ref. Only	Sig, GaAs		DL	12-12
52-0145-00	X	Ref. Only	Sig, GaAs		NP	12-12
52-0146-00	X	Ref. Only	Zener		NP	11-4
52-0147-00	A	1N971B	Zener	27	CR	11-2
		DZ790116B				
		SZ50622KRL				
		TD3810972				
		∞ CD38941				

PART NUMBER	** ND	JEDEC OR VENDOR NO.	TYPE	INDEX CHAR.	§§ STATUS	PAGE NO.
152-0148-00	A	1N3998A	Zener	6.2	CS	11-1
		SZ1617K				
152-0149-00	A	1N961B	Zener	10	CR	11-1
		DZ780511B				
		SZG35009K3				
		Z5406				
152-0149-01	A	1N961B	Zener		PP	12-8
152-0150-00	A	1N3037B	Zener	51	CR	11-2
		∞ 69-4132				
		∞ SZM25000K2				
152-0151-00	X	Ref. Only	Sig, Si		CR	12-11
152-0152-00	X	Ref. Only	Sig, GaAs		NP	12-12
152-0153-00	N	FD7003	Sig, Si	10	CR	12-4
		∞ PG7026				
		∞ TID777				
152-0153-01	X	Ref. Only	Sig, Si		NP	12-11
152-0153-02	N	FD7003	Sil, Sw		CR	12-8
152-0154-00	X	Ref. Only	Tnl, Ge		NP	10-4
152-0155-00	X	Ref. Only	Tnl, Ge		NP	10-4
152-0156-00	X	Ref. Only	Tnl, Ge		NP	10-4
152-0157-00	X	Ref. Only	Zener		NP	11-4
152-0158-00	X	Ref. Only	Sig, Snap-Off		DL	12-12
152-0159-00	X	Ref. Only	Tnl, Ge		NP	10-4
152-0160-00	X	Ref. Only	Sig, Ge		OB	12-11
152-0161-00	X	Ref. Only	Sig, GaAs		NP	12-12
152-0162-00	X	Ref. Only	Rect, Si		DL	12-9
152-0163-00	X	Ref. Only	Sig, Snap-Off		DL	12-12
152-0164-00	X	Ref. Only	Sig, GaAs		NP	12-12
152-0165-00	X	Ref. Only	Sig, Si		CR	12-11
152-0166-00	A	1N753A Fmly	Zener	6.2	CR	11-1
		SZ11738				
		TD3811404				
		Z5784				
		∞ 69-9035				
		∞ CD36972				
		∞ TD3810974				
152-0166-01	X	Ref. Only	Zener		DL	11-4
152-0167-00	X	Ref. Only	Zener		OB	11-4
152-0168-00	A	1N963B	Zener	12	CR	11-1
		SZG35009K4				
		TD331689				
		Z5408				
152-0168-01	U	1N963B	Zener		PP	12-8
152-0169-00	N	1N3712	Tunnel	1	CR	10-2
		STD962				
152-0170-00	A	1N4441 Fmly	Rect, Si	25	CR	12-2
		86-117				
		CX342				
152-0171-00	A	1N944 Fmly	Zener	11.7	CR	11-1
		DT710902D				
		SZ13464				
152-0172-00	X	Ref. Only	Zener		NP	11-4
152-0173-00	X	Ref. Only	Sig, Si		NP	12-11
152-0174-00	A	1N938A Fmly	Zener	9	CR	11-1
		SZ10930H				
152-0175-00	A	1N752A	Zener	5.6	CR	11-1
		SZG35008				
		TD3810976				
152-0175-01	N	1N752A	Zener	5.6	CR	11-1
		SZG-5021				
152-0176-00	X	Ref. Only	Zener		NP	11-4
152-0177-00	N		Mat or Sel		CR	12-6
152-0177-01	N	SMTD994	Tunnel	10	CR	10-2
152-0177-02	N	SMTD998	Tunnel	10	CR	10-2
152-0178-00	N	152-0061-00	Mat or Sel		CR	12-6
152-0179-00	X	Ref. Only	Rect, Si		CS	
152-0180-00	X	Ref. Only	Rect, Si		CR	12-9
152-0181-00	N	STD933	Tunnel	1	CR	10-2
152-0182-00	N	STD964	Tunnel	10	CR	10-2
152-0183-00	X	Ref. Only	Sig, GaAs		DL	12-12
152-0184-00	X	Ref. Only	Sig, GaAs		NP	12-12
152-0185-00	X	Ref. Only	Sig, Si		NP	12-11
152-0185-01	X	Ref. Only	Sig, Si		NP	12-11
152-0185-02	X	Ref. Only	Sig, Si		NP	12-11

∞ NOT A CURRENT VENDOR.

§§ FOR STATUS CODES, SEE PAGE 13-11

** NEW DESIGN CODE FROM COMPONENT ENGINEERING:

A = Acceptable
X - Do Not Use
N = Not Recommended
U = Undefined

DIODE PART NUMBER INDEX (CONT)
TEK PART TO VENDOR NUMBER

13

PART NUMBER	** ND	JEDEC OR VENDOR NO.	TYPE	INDEX CHAR.	§§ STATUS	PAGE NO.
152-0186-00	X	Ref. Only	Sig, Si		CS	12-11
152-0187-00	X	Ref. Only	VVC		OB	10-4
152-0188-00	X	Ref. Only	Rect, Si		NP	12-9
152-0189-00	X	Ref. Only	Tunnel		DL	10-4
152-0190-00	X	Ref. Only	Zener		NP	11-4
152-0191-00	X	Ref. Only	Zener		DL	11-4
152-0192-00	A	7701-54	Rect, Si	50	CR	12-2
152-0193-00	X	Ref. Only	Sig, GaAs		NP	12-12
152-0194-00	X	Ref. Only	Sig, Si		CS	12-11
152-0195-00	A	1N751A Fmly SZ11755RL TD332125 ∞ 69-65112 ∞ TD3810978	Zener	5.1	CR	11-1
152-0195-01	A		Zener		CR	12-8
152-0196-00	X	Ref. Only	Sig, Si		DL	12-11
152-0197-00	X	Ref. Only	Sig, Si		CS	12-11
152-0198-00	A	1N5624	Rect, Si	3	CR	12-2
152-0198-01	N	1N4721	Rect, Si	3	CR	12-2
152-0198-02	A	SEN-R-235 SS4986 ∞ 3SM2	Rect, Si	3	CR	12-2
152-0199-00	N	66-8039 ∞ SBEA2 ∞ MDA942-3 ∞ SDA10074	Rect, Br	1	CR	12-1
152-0200-00	N	66-8038 SA9172 ∞ SBR4	Rect, Br	1.5	CR	12-1
152-0201-00	X	Ref. Only	Sig, GaAs		NP	12-12
152-0202-00	X	Ref. Only	Sig, Si		LS	12-11
152-0203-00	X	Ref. Only	Tunnel		NP	10-4
152-0204-00	X	Ref. Only	Shockly		DL	10-4
152-0205-00	X	Ref. Only	Sig, GaAs		NP	12-12
152-0206-00	X	Ref. Only	Sig, GaAs		NP	12-12
152-0207-00	X	Ref. Only	Sig, GaAs		NP	12-12
152-0208-00	X	Ref. Only	Rect, Si		NP	12-9
152-0209-00	X	Ref. Only	Sig, GaAs		NP	12-12
152-0210-00	X	Ref. Only	Sig, GaAs		NP	12-12
152-0211-00	X	Ref. Only	Sig, GaAs		NP	12-12
152-0212-00	A	1N936 Fmly DT770120F SZ50646RL ∞ 69-9062 ∞ G5454	Zener	9	CR	11-1
152-0213-00	X	Ref. Only	Zener		CS	11-4
152-0214-00	X	Ref. Only	Tunnel		NP	10-4
152-0215-00	N	69-3530 SZ12386	Zener	75	CS	11-2
152-0216-00	X	Ref. Only	Sig, GaAs		NP	12-12
152-0217-00	A	1N756A Fmly SZG20 TD3810979 ∞ 69-6560 ∞ CD331882	Zener	8.2	CR	11-1
152-0218-00	X	Ref. Only	Rect, Si		NP	12-9
152-0219-00	X	Ref. Only	Sig, GaAs		NP	12-12
152-0220-00	X	Ref. Only	Sig, Sw		NP	12-11
152-0221-00	U	DD2026	Rect, Si		IN	
152-0222-00	X	Ref. Only	Rect, Si		NP	12-9
152-0223-00	U	1M15Z10	Zen, Si		IN	
152-0224-00	X	Ref. Only	Rect, Si		CS	12-9
152-0225-00	X	Ref. Only	Tnl, Ge		CM	10-4
152-0226-00	A	1N751A Fmly SZ12262RL TD3810980 ∞ CD332912	Zener	5.1	CR	11-1
152-0226-01	A		Zener		PP	12-8
152-0227-00	A	1N753A Fmly SZ13903 TD3810981 ∞ CD331212	Zener	6.2	CR	11-1
152-0228-00	X	Ref. Only	Zener		NP	11-4
152-0229-00	A	1N3034B ∞ SZM25000K3	Zener	39	CR	11-2
152-0230-00	X	Ref. Only	VVC	6.5	LS	10-4
152-0231-00	X	Ref. Only	VVC		CS	10-4
152-0232-00	N	66-8382 SBEA6 ∞ MDA942-6	Rect, Si	1.5	CS	12-1
152-0233-00	A	DA 2737 FDH1986 ∞ PG2309 ∞ CD61128	Sig, Si	80	CR	12-4
152-0234-00	X	Ref. Only	Zener		NP	11-4
152-0235-00	X	Ref. Only	Zener		DL	11-4
152-0236-00	A	1N963B Fmly SZ13553RL TD333881 ∞ 69-6636	Zener	12.5	CR	11-2
152-0237-00	U		Rect, Si		IN	
152-0238-00	X	Ref. Only	Sig, Si		NP	12-11
152-0239-00	X	Ref. Only	Sig, Si		OB	12-11
152-0240-00	N	UZ5215	Zener	150	CS	11-2
152-0241-00	A	1N973B DZ780511A SZG35009K5	Zener	33	CR	11-2
152-0241-01	A		Zener		PP	12-8
152-0242-00	A	1N486A Fmly FDH5004 MT5129 NDP341 ∞ 3065	Sig, Si	225	CR	12-4
152-0242-01	X		Matched		DL	
152-0242-02	U	1N486A	Rect, Si		CR	12-8
152-0243-00	A	1N965B SZ13203 TD3810983 Z5412	Zener	15	CR	11-2
152-0244-00	U	No info			IN	
152-0245-00	A	DA2740 NDP539 ∞ CD61165 ∞ PG2310	Sig, Si	40	CR	12-4
152-0246-00	A	DE140 WG1537HR ∞ CD12676 ∞ FDH5227 ∞ NDP0533	Sig, Si	40	CR	12-4
152-0246-01	A		Si, Sw		CR	12-8
152-0247-00	A	1N989B SZG275K1RL	Zener	150	CR	11-2
152-0248-00	X	Ref. Only	Rect, Si		DL	12-9
152-0249-00	X	Ref. Only	Rect, Si		CR	12-11
152-0250-00	X	Ref. Only	Sig, Snap-Off		OB	12-12
152-0251-00	X	Ref. Only	Sig, Snap-Off		OB	12-12
152-0252-00	X	Ref. Only	Sig, Snap-Off		NP	12-12
152-0252-01	A	GC-2534-15	Sig, Snap-Off	100	CR	10-3
152-0253-00	X	Ref. Only	Tunnel		DL	10-4
152-0254-00	X	Ref. Only	Tunnel		OB	10-4
152-0254-01	X	Ref. Only	Tunnel		OB	10-4
152-0255-00	A	1N978B DZ780417B SZG35009K7 ∞ TD3810985	Zener	51	CR	11-2
152-0256-00	X	Ref. Only	Sig, Si		DL	12-11
152-0257-00	X	Ref. Only	Sig, GaAs		NP	12-12
152-0258-00	X	Ref. Only	Sig, GaAs		NP	12-12
152-0259-00	X	Ref. Only	Sig, GaAs		NP	12-12
152-0260-00	X	Ref. Only	Rect, Si		CS	12-9
152-0261-00	X	No info	Zen, Si		DL	
152-0262-00	X	Ref. Only	Sig, Snap-Off		NP	12-12
152-0263-00	X	Ref. Only	Sig, Snap-Off		NP	12-12
152-0264-00	N	AUZ756-2	Zener	56	CR	11-2

DIODE PART NUMBER INDEX (CONT)

TEK PART TO VENDOR NUMBER

PART NUMBER	** ND	JEDEC OR VENDOR NO.	TYPE	INDEX CHAR.	§§ STATUS	PAGE NO.
152-0265-00	A	1N970B SZG35009K8 ∞ TD3810986	Zener	24	CR	11-2
152-0266-00	X	Ref. Only	Tunnel		DL	10-4
152-0267-00	X	Ref. Only	Zener		NP	11-4
152-0268-00	A	1N979B DZ720714C SZG35009K9 ∞ TD3810987	Zener	56	CR	11-2
152-0269-00	A	1N3182 Fmly SMV1263 ∞ PG 1151	VVC	33	CR	10-2
152-0269-01	A	SMV1263-1	VVC	33	CR	10-2
152-0270-00	A	SMV1563 ∞ V-56E Fmly ∞ V791	VVC	61.6	CR	10-2
152-0271-00	A	C33-4001	VVC	10	CR	10-2
152-0271-01	X	Ref. Only	VVC		CS	10-4
152-0272-00	A	MT-60077-300 ∞ SMV229	VVC	6.8	CR	10-2
152-0273-00	X	Ref. Only	Tab, Ld Spi		DL	12-10
152-0274-00	A	1N1200 Fmly 66-8501 SR1901	Rect, Si	12	CR	12-2
152-0275-00	X	Ref. Only	Tunnel		OB	10-4
152-0275-01	X	Ref. Only	w/Washers		OB	
152-0276-00	X	Ref. Only	Tunnel		NP	10-4
152-0276-01	X	Ref. Only	Tunnel		NP	
152-0277-00	X	Ref. Only	Tunnel		NP	10-4
152-0278-00	A	1N4372A SZG35009K20 ∞ TD3810988	Zener	3	CR	11-1
152-0279-00	A	1N751A DZ720714D SZG35010RL TD3810989	Zener	5.1	CR	11-1
152-0280-00	A	1N753A Z5410 ∞ SZG30086 ∞ TD3810990	Zener	6.2	CR	11-1
152-0281-00	A	1N969B SZG35009K12 TD3810991	Zener	22	CR	11-2
152-0282-00	A	1N972B ∞ TD3810992	Zener	30	CR	11-2
152-0283-00	A	1N976B DZ750903B SZ14257KRL TD3810993	Zener	43	CR	11-2
152-0284-00	A	1N977B SZG35009K14 TD3810994	Zener	47	CR	11-2
152-0285-00	A	1N980B SZG35009K15 ∞ TD3810995	Zener	62	CR	11-2
152-0286-00	A	1N982B DZ720714B SZG35007K15 TD3810996	Zener	75	CR	11-2
152-0287-00	A	1N986B	Zener	110	CR	11-2
152-0288-00	A	1N988 Fmly DZ720717C SZ11824RL ∞ TD332977	Zener	140	CR	11-2
152-0289-00	A	1N991B DZ720717B SZ12484KRL	Zener	180	CR	11-2
152-0290-00	A	1N3016B SZM25000K12	Zener	6.8	CS	11-1
152-0291-00	A	1N3027B SZM25000K4	Zener	20	CR	11-2
152-0292-00	A	1N3031B	Zener	30	CS	11-2
152-0293-00	A	1N3032B SZM25000K5	Zener	33	CS	11-2
152-0294-00	A	1N3033B ∞ SZM25000K6	Zener	36	CR	11-2
152-0295-00	A	1N3042B SZM25000K7RL	Zener	82	CR	11-2
152-0295-01	X	Ref. Only	Zener		DL	11-4
152-0296-00	X	Ref. Only	Zener		CS	11-4
152-0297-00	X	Ref. Only	Zener		CS	11-4
152-0298-00	X	Ref. Only	Zener		CR	11-4
152-0299-00	X	Ref. Only	Zener		CR	11-4
152-0300-00	X	Ref. Only	Zener		DL	11-4
152-0301-00	X	Ref. Only	Zener		DL	11-4
152-0302-00	X	Ref. Only	Zener		DL	11-4
152-0303-00	X	Ref. Only	Zener		DL	11-4
152-0304-00	A	1N968B SZG35009K17 Z5411 ∞TD3811000	Zener	20	CR	11-2
152-0304-01	A		Zener		CR	12-8
152-0305-00	A	1N3045B ∞ SZM25000K8	Zener	110	CR	11-2
152-0306-00	A	1N960B SZ12812RL Z5409	Zener	9.1	CR	11-1
152-0306-01	A	1N960B Fmly SZG44RL	Zener	9.1	CR	11-1
152-0307-00	N	SSD1150 ∞ MSD6100	Sig, Si	100	CR	12-4
152-0308-00	X	Ref. Only	Zener		NP	11-4
152-0309-00	A	1N3828A SZ14310	Zener	6.2	CR	11-1
152-0309-01	X	Ref. Only	Zener		CS	11-5
152-0310-00	N	STD910	Tunnel	5.25	CR	10-2
152-0311-00	A	1N2999B SZM86 ∞ 69-4167	Zener	56	CR	11-2
152-0312-00	A	1N3002B	Zener	75	CS	11-2
152-0313-00	X	Ref. Only	Sig, Snap-Off		CR	12-12
152-0313-01	X	Ref. Only	Sig, Snap-Off		DL	12-12
152-0313-02	X	Ref. Only	Sig, Snap-Off		NP	12-12
152-0313-03	X	Ref. Only	Sig, Snap-Off		NP	12-12
152-0314-00	X	Ref. Only	Sig, Snap-Off		NP	12-12
162-0315-00	X	Ref. Only	Sig, Si		EN	12-11
152-0316-00	X	Ref. Only	Mat or Sel		CS	12-6
152-0317-00	A	1N3497 SZG20012 TD41113	Zener	6.2	CR	11-1
152-0318-00	X	Ref. Only	Zener		DL	11-5
152-0319-00	X	Ref. Only	Sig, Snap-Off		OB	12-12
152-0320-00	X	Ref. Only	Sig, Snap-Off		CS	12-12
152-0321-00	X	Ref. Only	Sig, Si		CR	12-11
152-0322-00	A	A2X600 BAR11 1SS97(2)T 5082-2672 ∞ ESM2811Fmly ∞ ND4973-7E	Sig, Schottky	15	CR	12-4
152-0322-01	A	5082-9475 A2X600A	Mat or Sel		CR	12-4 & 6
152-0323-00	A	DE102 MT5085 WG1518 ∞ 3254	Sig, Si		CR	12-4
152-0323-01	A	DE101 MT5127	Sig, Si	40	CR	12-4
152-0323-02	X	Ref. Only	Sig, Si		DL	12-11
152-0324-00	A	DE103 MT5128 ∞ 3253 ∞ TD55125	Sig, Si	40	CR	12-4
152-0324-01	A	DE133	Sig, Si	40	CR	12-4
152-0325-00	X	No info.	Sig, Snap-Off		NP	
152-0326-00	A	1N755A Fmly DZ720925A SZ13927 ∞ 69-6913	Zener	7.5	CR	11-1

∞ NOT A CURRENT VENDOR.
§§ FOR STATUS CODES, SEE PAGE 13-11.

** NEW DESIGN CODE FROM COMPONENT ENGINEERING:
A = Acceptable N = Not Recommended
X = Do Not Use U = Undefined

DIODE PART NUMBER INDEX (CONT)

TEK PART TO VENDOR NUMBER

13

PART NUMBER	** ND	JEDEC OR VENDOR NO.	TYPE	INDEX CHAR.	§§ STATUS	PAGE NO.
152-0327-00	U	No info.			SC	
152-0328-00	N	1N5283 Fmly SCL011	Current Limiting	.05-30	CS	11-3
152-0329-00	N	SMTD892	Tunnel	18.9	CR	10-2
152-0330-00	X	Ref. Only	Tunnel		CS	10-4
152-0331-00	N	SF-1	Rect, Si	30	CR	12-2
152-0332-00	X	Ref. Only	Tunnel		DL	10-4
152-0333-00	A	1N4610 DJ2011 FDH-6012 NDP261	Sig, Si	55	CR	12-4
152-0333-01	X	Ref. Only	Sig, Si		CR	
152-0333-02	A	1N461D	Si, Sw		CR	12-8
152-0334-00	X	Ref. Only	Tunnel		NP	10-4
152-0334-01	X	Ref. Only	Tunnel		OB	10-4
152-0335-00	X	Ref. Only	Sig, Snap-Off		NP	12-12
152-0335-01	A	A4X583 GC20279	Snap-Off	150	CR	10-3
152-0336-00	X	Ref. Only	Rect, Si		DL	12-9
152-0337-00	A	1N753A Fmly SZG210K TD3811003 ∞ CD331701	Zener	6.3	CR	11-1
152-0341-00	U		Sig, Si		TC	
152-0353-00	A	1N4006GP GP10K-014 S8M ∞ MR1-1600	Rect, Si	1	CR	12-2
152-0357-00	A	1N983B DZ720719E SZ12461KRL TD3811004	Zener	82	CR	11-2
152-0358-00	N	V7EA	VVC	7	OB	10-2
152-0359-00	A	SZ50850 ∞ DC41174	Zener	9	CR	11-1
152-0360-00	X	Ref. Only	Sig, GaAs		NP	12-12
152-0361-00	X	Ref. Only	Sig, GaAs		NP	12-12
152-0362-00	N	1N53B 5-0053-77	Sig, Si		CS	12-4
152-0363-00	N	MA4933B	Sig, Si		CS	12-4
152-0364-00	N	MA4934A	Sig, Si		CS	12-4
152-0365-00	X	Ref. Only	Tunnel		NP	10-4
152-0366-00	N	SZ13463K ∞ GREA7	Zener	9	CS	11-1
152-0367-00	X	Ref. Only	Sig, Si		CR	12-11
152-0368-00	X	Ref. Only	Schottky		CR	12-5
152-0369-00	A	UZ1215	Zener	12	CR	11-2
152-0371-00	X	Ref. Only	Tunnel		DL	10-4
152-0372-00	U	No info.	Zener		TC	
152-0373-00	X	Ref. Only	Tunnel		CS	10-4
152-0375-00	X	Ref. Only	Tunnel		OB	10-4
152-0376-00	X	Ref. Only	Tunnel		DL	10-4
152-0377-00	X	Ref. Only	Tunnel		DL	10-4
152-0378-00	X	Ref. Only	Tunnel		DL	10-4
152-0379-00	X	Ref. Only	Tunnel		CS	10-4
152-0380-00	X	Ref. Only	Tunnel		OB	10-4
152-0381-00	X	Ref. Only	Tunnel		OB	10-4
152-0382-00	X	Ref. Only	Tunnel		DL	10-4
152-0383-00	N	SMTD898	Tunnel	50.75	CR	10-2
152-0383-01	N	152-0383-00	Mat or Sel		CR	12-6
152-0383-02	N	152-0383-00	Mat or Sel		CR	12-6
152-0384-00	N	R-155	Rect, Br	25	CR	12-1
152-0385-00	A	CX523 SC20 VB-20	Rect, Si	100	CR	12-2
152-0386-00	N	STD927	Tunnel	10	CR	10-2
152-0387-00	X	Ref. Only	Tunnel		CR	10-4
152-0392-00	X	Ref. Only	Rect, Si		NP	
152-0393-00	X	Ref. Only	Sig, Si		NP	
152-0394-00	A	1N3036B ∞ SZM25000K9	Zener	47	CR	11-2
152-0395-00	A	1N749A SGZ35009K18 TD332317	Zener	4.3	CR	11-1
152-0396-00	N	VH-447	Rect, Br	3	CR	12-1
152-0396-01	A	6520821 KBPC604-1	Rect, Br	3	CR	12-1
152-0397-00	A	1N3890 Fmly SR1976K ∞ DR710903A ∞ MR880 Fmly	Rect, Si	12	CR	12-2
152-0398-00	A	1N4935 RGP10D-005 SR3609RL	Rect, Si	1	CR	12-2
152-0398-01	A		Rect, Si		CR	12-8
152-0399-00	X	Ref. Only	Rect, Si		CR	12-9
152-0400-00	A	1N4936 1N4944 MB2501 SR1977K	Rect, Si	1	CR	12-2
152-0400-01	X	Ref. Only	Rect, Si		DL	12-9
152-0401-00	N	SPT32K ∞ MPT32	Shockly	28-36	CR	10-2
152-0401-01	X	Ref. Only	Shockly, Si		CS	
152-0402-00	X	Ref. Only	Tunnel		CS	10-4
152-0404-00	X	Ref. Only	Rect, Si		CS	12-9
152-0404-01	X	Ref. Only	Rect, Si		CR	12-9
152-0405-00	A	1N4744A Z6041	Zener	15	CR	11-2
152-0406-00	A	W-675 ∞ VH-247	Rect, Br	3	CR	12-1
152-0408-00	A	H-345 SA2055 ∞ VF5-12X	Rect, Si	5	CR	12-2
152-0408-01	X	Ref. Only	Rect, Si		DL	12-9
152-0408-02	X	Ref. Only	Rect, Si		OB	12-9
152-0409-00	N	CX149 VG-12X	Rect, Si	5	CR	12-2
152-0411-00	A	1N937 SZ12483KRL ∞ 69-7582	Zener	9	CR	11-1
152-0411-01	A	SZG20286H DT-1073	Zener		CR	12-8
152-0412-00	X	Ref. Only	Rect, Si		CR	12-9
152-0413-00	N	RGP10G-022 SR2046KRL UTR307 ∞ S4F	Rect, Si	1	CR	12-2
152-0414-00	A	RGP10D Series SR2069RL UTR 308 ∞ RGP10G Ser	Rect, Si	1	CR	12-2
152-0415-00	X	Ref. Only	Rect, Si		NP	
152-0416-00	U	No info	Zener		CS	
152-0417-00	A	1N3047B SZM20065	Zener	130	CS	11-2
152-0418-00	X	Ref. Only	Rect, Si		CR	12-9
152-0419-00	U	No info.	Rect, Si		CS	
152-0420-00	X	Ref. Only	Schottky		CR	12-5
152-0420-01	A	D4787-91 Fmly MA2E145	Schottky	7	CR	12-4
152-0422-00	A	A201-4302 SMV1264 ∞ PG1084	VVC	7	CR	10-2
152-0423-00	X	Ref. Only	Rect, Si		CR	12-9
152-0424-00	X	Ref. Only	Zen, Si		EN	11-5
152-0425-00	X	Ref. Only	Sig, Snap-Off		OB	12-12
152-0426-00	N	1N647 Fmly G2017-1	Rect, Si	400	CR	12-2
152-0427-00	A	1N985B SZG275K-3	Zener	100	CR	11-2
152-0428-00	A	1N987B SZ13202	Zener	120	CR	11-2
152-0429-00	A	SA-3282 VG-5X-905	Rect, Si	10	CR	12-2
152-0433-00	X	Ref. Only	Schottky		CS	

DIODE PART NUMBER INDEX (CONT)

TEK PART TO VENDOR NUMBER

PART NUMBER	** ND	JEDEC OR VENDOR NO.	TYPE	INDEX CHAR.	§§ STATUS	PAGE NO.
152-0434-00	X	Ref. Only	Sig, Snap-Off		OB	12-12
152-0435-00	X	Ref. Only	Sig, Snap-Off		DL	12-12
152-0436-00	X	Ref. Only	Sig, Snap-Off		DL	12-12
152-0437-00	A	1N959 Fmly SZG14K TD332679 ∞ 69-7519 ∞ TD3811008	Zener	8.2	CR	11-1
152-0438-00	A	SZ 9.1 UZ1364	Zener	9.1	CR	11-1
152-0439-00	X	Ref. Only	Sig, Snap-Off		OB	12-12
152-0440-00	X	Ref. Only	Zener		CS	11-5
152-0441-00	X	Ref. Only	Schottky		OB	12-5
152-0442-00	X	Ref. Only	Schottky		CR	12-5
152-0442-01	X	Ref. Only	Schottky		CR	12-5
152-0443-00	X	Ref. Only	Sig, Snap-Off		OB	12-12
152-0444-00	X	Ref. Only	Rect, Si		DL	12-9
152-0445-00	X	Ref. Only	Sig, Snap-Off		OB	12-12
152-0446-00	X	Ref. Only	Schottky		CS	12-5
152-0446-01	X	Ref. Only	Sig, Snap-Off		CS	12-12
152-0448-00	U	No info	Zener		CS	
152-0449-00	U	1S205	Sig, Si		CS	
152-0450-00	X	Ref. Only	Sig, Snap-Off		DL	12-12
152-0451-00	A	MA43677	Snap-Off	140	CR	10-3
152-0452-00	X	Ref. Only	Sig, Snap-Off		CR	12-12
152-0452-01	X	Ref. Only	Sig, Snap-Off		CR	12-12
152-0453-00	X	Ref. Only	Schottky		CS	12-5
152-0454-00	X	Ref. Only	Sig, Si		NP	12-11
152-0455-00	X	Ref. Only	VVC		EN	10-4
152-0456-00	A	1N827 SZG25002K1	Zener	6.2	CR	11-1
152-0457-00	A	5082-2068 ∞ MDO 28	Sig, Schottky	2.5	CR	12-4
152-0457-01	U	MD028	Schottky		PP	12-8
152-0458-00	X	Ref. Only	Schottky		NP	12-5
152-0458-01	X	Ref. Only	Schottky		NP	12-5
152-0459-00	X	Ref. Only	Sig, Si		DL	12-11
152-0460-00	N	1N5299 SCL072	Current Limiting	1.2	CR	11-3
152-0461-00	A	1N821 ∞ CD41089	Zener	6.2	CR	11-1
152-0461-01	X	Ref. Only	Zener		DL	11-5
152-0462-00	A	KBL02-8 SDA10228 ∞ MDA970-3	Rect, Br	2.5	CR	12-1
152-0462-01	N	RKBL02-14 ∞ 652-1083	Rect, Br	2.5	CS	12-1
152-0462-02	A	MDA970-3 ∞ 652-1085	Rect, Br	2.5	CR	12-1
152-0463-00	X	Ref. Only	Schottky		NP	12-5
152-0464-00	A	1N4570 SZG25002K3	Zener	6.4	CR	11-1
152-0465-00	X	Ref. Only	Sig, Snap-Off		OB	12-12
152-0470-00	A	1N992B	Zener	200	CR	11-2
152-0471-00	X	Ref. Only	Schottky		NP	12-5
152-0471-01	N	DMJ6786-98	Sig, Schottky		CR	12-4
152-0474-00	N		Mat or Sel		CR	12-6
152-0475-00	A	SDA10211	Rect, Br	12	CR	12-1
152-0476-00	U	No info	Rect, Si		OB	
152-0478-00	X	Ref. Only	Rect, Si		NP	12-9
152-0479-00	A	1N1203 80-0182 SR2117	Rect, Si	12	CR	12-2
152-0480-00	A	1N2989B	Zener	30	CR	11-2
152-0481-00	A	1N3826A SMZ25000K10	Zener	5.1	CR	11-1
152-0482-00	X	Ref. Only	Schottky		OB	12-5
152-0486-00	A	1N3497 Fmly SZG20008 TD41099	Zener	6.2	CR	11-1
152-0488-00	A	2KBP02-08 2FB200 SDA317 3N255 Fmly ∞ TSK11-000	Rect, Br	1	CR	12-1
152-0488-01	A		Rect, Br	1	CR	12-8
152-0489-00	N	Diode Assy.	Tnl, Ge		CR	
152-0490-00	N	1N5285 SCL083K	Current Limiting	.27	CS	11-3
152-0491-00	X	Ref. Only	Rect, Si		CS	12-9
152-0492-00	X	Ref. Only	Rect, Si		DL	12-9
152-0493-00	A	CMX114 ∞ SCMA10114	V. Multr	7	CR	12-3
152-0495-00	A	CMX294 MH974B01 ∞ SCMA10622	V. Multr	2	CR	12-3
152-0495-01	A	CMX131	V. Multr	2	CS	12-3
152-0496-00	U		Rect, Si		CS	
152-0497-00	A	3N257 Fmly KBP06-4 SDA318 ∞ A1423MX67	Rect, Br	1	CR	12-1
152-0498-00	X	Ref. Only	V. Multr		DL	12-10
152-0499-00	X	Ref. Only	Sig, Snap-Off		NP	12-12
152-0500-00	X	Ref. Only	Zener		DL	11-5
152-0501-00	N	SSD2405 ∞ MSD6150	Sig, Si	70	CR	12-4
152-0502-00	X	Ref. Only	Rect, Si		CR	12-9
152-0503-00	A	1N4756 Fmly 5082-8872 MA43685	Snap-Off	500	CR	10-3
152-0503-01	A	QSRD-4866	Snap-Off	500	CR	10-3
152-0505-00	X	Ref. Only	Sig, Si		NP	12-11
152-0506-00	A	A4X618 CVB-1030B ∞ A4S375	Snap-Off	120	CR	10-3
152-0507-00	X	Ref. Only	Tnl, Ge		DL	10-4
152-0508-00	A	SZ13294RL	Zener	12.6	CR	11-2
152-0509-00	A	AM1408L8 MC1408L8 SSS1408A-021 CMX115	V. Multr	6	CR	12-3
152-0510-01	A	1N3048B 1M150ZS5	Zener	150	CR	11-2
152-0512-00	A	1N4739A TD334328 UZ8709 Z6124	Zener	9.1	CR	11-1
152-0513-00	A	1N4763A UZ2354 ∞ UZ8791	Zener	91	CR	11-2
152-0514-00	A	1N961B Fmly SZG15RL	Zener	10	CR	11-1
152-0516-00	X	Ref. Only	Sig, Si		NP	12-11
152-0518-00	A	K019	Rect, Br	30	CR	12-1
152-0519-00	A	1N3997A	Zener	5.6	CR	11-1
152-0520-00	A	1N4742A HW12B UZ8712 Z6033	Zener	12	CR	11-1
152-0521-00	X	Ref. Only	Zener		EN	11-5
152-0524-00	A	5082-1779 MA47690	Pin		CR	10-3
152-0525-00	N	ND4121M-3G ∞ SMR32B	Sig, Schottky	10	CR	12-4
152-0526-00	A	1N829A Fmly SZG20054	Zener	6.35	CR	11-1
152-0527-00	X	Ref. Only	Zener		OB	11-5
152-0528-00	X	Ref. Only	Sig, Si		CS	
152-0529-00	X	Ref. Only	Rect, Si		OB	12-9
152-0530-00	X	Ref. Only	Rect, Si		OB	12-9
152-0531-00	X	Ref. Only	Rect, Si		OB	12-9
152-0532-00	X	Ref. Only	Zener		OB	11-5
152-0533-00	X	Ref. Only	Rect, Si		OB	12-9
152-0534-00	X	Ref. Only	Zener		OB	11-5
152-0535-00	N	SDA10339 ∞ MDA980-2	Rect, Br	12	CR	12-1
152-0536-00	A	SMV1110	Sig, Schottky		CR	12-4
152-0537-00	X	Ref. Only	Zener		OB	11-5
152-0538-00	X	Ref. Only	Rect, Si		OB	12-9

∞ NOT A CURRENT VENDOR.
§§ FOR STATUS CODES, SEE PAGE 13-11

** NEW DESIGN CODE FROM COMPONENT ENGINEERING:
A = Acceptable
X = Do Not Use
U = Not Recommended
U = Undefined

DIODE PART NUMBER INDEX (CONT)

TEK PART TO VENDOR NUMBER

PART NUMBER	** ND	JEDEC OR VENDOR NO.	TYPE	INDEX CHAR.	§§ STATUS	PAGE NO.
152-0540-00	N	1N5829 SBR5366	Rect, Si	25	CR	12.2
152-0547-00	U	BZY88/C22	Zen, Si		CS	
152-0548-00	X	Ref. Only	Ph, Si		NP	12-10
152-0548-01	X	Ref. Only	Ph, Si		CR	12-10
152-0548-02	X	Ref. Only	Ph, Si		CS	12-10
152-0549-00	X	Ref. Only	Ph, Si		NP	12-10
152-0549-01	X	Ref. Only	Ph, Si		CR	12-10
152-0549-02	X	Ref. Only	Ph, Si		CR	12-10
152-0550-00	X	Ref. Only	Ph, Si		NP	12-10
152-0550-01	X	Ref. Only	Ph, Si		CR	12-10
152-0550-02	X	Ref. Only	Ph, Si		CR	12-10
152-0550-03	X	Ref. Only	Ph, Si		CM	12-10
152-0551-00	X	Ref. Only	Rect, Si		DL	12-10
152-0552-00	A	CMX315 MH925A01 MSL35764 ∞ SCMA10930	V. Multr	3	CR	12-3
152-0552-01	A	CMX589 ∞ SCMA10930	V. Multr	3	CR	12-3
152-0553-00	X	Ref. Only	Zener		OB	11-5
152-0556-00	A	KBL005-8 ∞ SDA10271K	Rect, Br	2.5	CR	12-1
152-0556-01	A	SDA10271K	Rect, Br, Si	2.5	CR	12-1
152-0557-00	A	SDA10266 ∞ MDA980-3	Rect, Br	12	CR	12-1
152-0558-00	X	Ref. Only	Sig, Si		NP	12-11
152-0558-01	X	Ref. Only	Photoptic		CR	12-10
152-0559-00	X	Selected	Sig- Si		DL	
152-0560-00	X	Ref. Only	Rect, Si		OB	12-9
152-0562-00	X	Ref. Only	Zener		CS	11-5
152-0563-00	X	Ref. Only	Zener		CR	11-5
152-0564-00	X	Ref. Only	Ph		CR	12-10
152-0568-00	X	Ref. Only	Rect, Si		OB	12-9
152-0569-00	X	Ref. Only	Ph, Si		CR	12-10
152-0569-01	X	Ref. Only	Ph, Si		CR	12-10
152-0570-00	X	Ref. Only	Ph, Si		DL	12-10
152-0571-00	A	1N966B SZ35014K1	Zener	16	CR	11-2
152-0572-00	X	Ref. Only	Schottky		CR	12-5
152-0572-47	X	Ref. Only	Ph, Si		NP	12-10
152-0573-00	X	Ref. Only	Zener		CS	11-5
152-0574-00	A	NDP566 WG1308 ∞ PG2312	Sig, Si	120	CR	12-4
152-0575-00	X	Ref. Only	LED		TC	12-10
152-0576-00	A	1N3018 SZ14327K	Zener	8.2	CR	11-1
152-0577-00	X	Ref. Only	Rect, Si		NP	12-9
152-0577-01	X	Ref. Only	Rect, Si		NP	12-9
152-0578-00	A	V34-4202 ∞ DKV6524C	VVC	155	CR	10-2
152-0579-00	A	UM6601B	Pin		CR	10-3
152-0580-00	A	1N982 Fmly DZ760519B SZ14358	Zener	75	CR	11-2
152-0581-00	A	1N5817 ITS5817	Rect, Si	1	CR	12-2
152-0581-03	U	1N5817	Schottky		PP	12-8
152-0582-00	A	1N5820 SKS010 ∞ VSK320	Rect, Si	3	CR	12-2
152-0583-00	X	Ref. Only	Zener		DL	
152-0584-00	A	CMX164	V. Multr	1	CR	12-3
152-0585-00	A	W02M-30	Rect, Br	.75	CR	12-1
152-0586-00	A	RGP10J-011	Rect, Si	500	CR	12-2
152-0586-01	A	RGP10J-005	Rect, Si	.5	CR	12-2
152-0587-00	A	CMX192 MSL2539 SCMA 10425	V. Multr	2	CR	12-3
152-0588-00	X	Ref. Only	Ph		OB	12-10
152-0589-00	A	1N942 SZG20182	Zener	11.7	CR	11-1
152-0590-00	A	1N967B SZG35014K2	Zener	18	CR	11-2
152-0591-00	X	Ref. Only	V. Multr		DL	12-10
152-0592-00	X	Ref. Only	V. Multr		DL	12-10
152-0593-00	X	Ref. Only	V. Multr		DL	12-10
152-0594-00	X	Ref. Only	V. Multr		DL	12-10
152-0595-00	A	MV1404	VVC	120	CR	10-2
152-0596-00	X	Ref. Only	Sig, Si		DL	12-11
152-0597-00	A	PG-1046	VVC	330	CR	10-2
152-0598-00	A	CMX667A	V. Multr	3	PP	12-3
152-0599-00	A	SKP45	Trans. Suppressor	5	PP	10-3
152-0600-00	A	MBR1535CT	Rect, Si	15	PP	12-2
152-0601-00	A	MUR115	Rect, Si	1	PP	12-2
152-0609-00	A	D5847A	Sig, Schottky		CR	12-4
152-0609-01	A	5082-6878	Sig, Schottky		CR	12-4
152-0611-00	A	1N960 Fmly DZ730710B SZ14347	Zener	9	CR	11-1
152-0612-00	A	1N4806 Fmly PG1146	VVC	17.5	CR	10-2
152-0613-00	X	Ref. Only	Rect, Si		CS	12-9
152-0615-00	X	Ref. Only	Zener		EN	11-5
152-0618-00	A	SCPA05	Rect, Br	15	CR	12-1
152-0619-00	X	Ref. Only	Sig, Si		DL	12-11
152-0620-00	X	Ref. Only	Photometric		CR	12-10
152-0622-00	A	V344203 ∞ KV2402	VVC	155	CR	10-2
152-0622-01	A	V34-4204	VVC	155	CR	10-2
152-0629-00	A	PV120	Sig, Si	200	CR	12-4
152-0631-00	X	Ref. Only	Schottky		CR	12-5
152-0632-00	X	Ref. Only	Ph		CR	12-10
152-0633-00	X	Ref. Only	Rect, Si		CR	12-9
152-0634-00	A	CMX222	V. Multr	1.5	CR	12-3
152-0635-00	A	HVG124 SCRT100	V. Multr	1.5	CR	12-3
152-0636-00	X	Ref. Only	Rect, Si		CR	12-9
152-0637-00	X	Ref. Only	V. Multr		NP	12-10
152-0637-01	X	Ref. Only	V. Multr		NP	12-10
152-0637-02	A	CMX522 MH911G01 ∞ SCMA10864	V. Multr	1.5	CR	12-3
152-0638-00	A	SZG98	Zener	7	CR	11-1
152-0639-00	A	H1400-4 MX100 SS3949 ∞ SRF100	Rect, Si	10	CR	12-2
152-0640-00	A	SD-4101 SD41 SI41	Rect, Si	30	CR	12-2
152-0641-00	X	Ref. Only	Zener		DL	11-5
152-0642-00	A	SD5218 SD51 S060GG0F	Rect, Si	40	CR	12-2
152-0643-00	A	5082-0012	Pin		CR	10-3
152-0645-00	X	Ref. Only	Rect, Si		DL	12-9
152-0646-00	A	Tek Made	Schottky	4	CR	12-5
152-0646-01	X	Ref. Only			NP	
152-0646-02	A	Tek Made	Schottky	5	CR	12-5
152-0647-00	A	1N957B SZG35014K3	Zener	6.8	CR	11-1
152-0648-00	X	Ref. Only	Sig, Si		DL	
152-0650-00	A	BB105B U11-4101	VVC	11.5	CR	10-2
152-0651-00	A	SZG134	Zener	28	CR	11-2
152-0652-00	A	CMX252 ∞ SCMA10426	V. Multr	2	CR	12-3
152-0654-00	X	Ref. Only	Ph, GaAs		SC	12-10
152-0655-00	A	A115AX39 SEN-R-246 ∞ SRSFR310	Rect, Si	3	CR	12-2
152-0655-01	N	SRSFR310	Rect, Si		CR	12-2
152-0656-00	A	A9022 MMCFD914	Sig, Si	50	CR	12-4
152-0656-01	U	Checked			CR	
152-0657-00	A	SZG20107	Zener	108	CR	11-2
152-0659-00	A	MR751 P600D-004	Rect, Si		CR	12-2

DIODE PART NUMBER INDEX (CONT)

TEK PART TO VENDOR NUMBER

PART NUMBER	** ND	JEDEC OR VENDOR NO.	TYPE	INDEX CHAR.	§§ STATUS	PAGE NO.
152-0660-00	A	CMX286	V. Multr	1.5	OT	12-3
152-0661-00	A	MR856	Rect, Si	3	CR	12-2
152-0662-00	A	SZG195	Zener	5	CR	11-1
152-0664-00	A	5082-2800	Sig, Schottky	70	NP	12-10
152-0665-01	A	BB109G	VVC	29	CR	10-2
		SMV1344				
		∞ MV109				
152-0666-00	A	W08M-11	Rect, Br	.75	CR	12-1
152-0667-00	A	SZG30025RL	Zener	3	CR	11-1
152-0668-00	A	KBPC802	Rect, Br	6	CR	12-1
152-0669-00	A	1N5380B	Zener	120	CR	11-2
		SZP40045				
152-0670-00	A	1N5822	Rect, Si	3	CR	12-2
		SKS002				
152-0672-00	A	DSR4085	Rect, Si	3	CR	12-2
		MB7363				
		∞ DSR5050				
152-0673-00	A	SMV1361	VVC	500	CR	10-2
		∞ MVAM115				
152-0674-00	A	1N4947	Rect, Si	1	CR	12-2
		RGP10K-009				
152-0675-00	A	HP9645	Sig, Schottky	4	CR	12-4
		DMD6939-99				
152-0675-01	X	Ref. Only	Schottky, Si		DL	
152-0676-00	A	1N5625	Rect, Si	3	CR	12-2
		A115DX112				
		SEN-R-247				
152-0677-00	X	Ref. Only	Ph, WPN		DL	12-10
152-0678-00	A	GC-2544-00	Snap-Off	150	CR	10-3
152-0678-01	U	Inspected	Step Rec		PP	
152-0679-00	A	MV1C2097	VVC	1	CR	10-2
152-0679-01	U	Inspected	VVC, Si		CR	
152-0680-00	A	TD3811018	Zener	19.3	CR	11-2
		SZG266				
152-0681-00	X	Ref. Only	Rect, Si		CS	
152-0682-00	A	CMX287	V. Multr	1	CR	12-3
		MH390E01				
		∞ SCMA10625				
152-0683-00	A	UZ2359	Zener	7.5	CR	11-1
		∞ SS4091				
		∞ UZ8707				
152-0684-00	N	8C2070	VVC	7.05	DL	10-2
152-0685-00	A	QSCH-1608	Sig, Schottky	70	CR	12-4
152-0686-00	A	SR3273	Rect, Si	5	CR	12-2
		SRP600B-009				
		∞ MR821				
152-0687-00	A	CMX334C	V. Multr	5	CR	12-3
		∞ SCMA10639				
152-0688-00	A	1N4370A	Zener	2.4	CR	11-1
		DZ771128F				
152-0688-01	A		Zener		PP	12-8
152-0689-00	A	1N748A	Zener	3.9	CR	11-1
152-0690-00	A	1N746A	Zener	3.3	CR	11-1
152-0691-00	N	1N4733	Zener	5.1	CS	11-1
152-0692-00	A	SKS017	Rect, Si	30	CR	12-2
		SD241				
		∞ VSK30207T				
152-0693-00	A	SZG30068	Zener	4	CR	11-1
152-0701-00	N	FDC3600	Sig, Si		CR	12-4
		∞ MMCD6100				
152-0701-01	U	MMCD6100	Sw, Hi Spd		CR	
152-0702-00	A	SZG30214RL	Zener	13	CR	11-2
		∞ 5M13Z52				
152-0703-00	A	CMX426	V. Multr	2	CR	12-3
		∞ SCMA10781				
152-0704-00	A	1N4007G	Rect, Si	1	CR	12-2
152-0705-00	A	1N5386B	Zener	180	CS	11-2
152-0706-00	A	GP30M-008	Rect, Si	3	CR	12-2
		SEN-K-226				
		SS4120				
		∞ AZ48j				
		∞ SRS3120				
152-0710-00	A	5082-0097	Sig, Schottky	15	CR	12-4
		A2S097				
152-0710-01	X	Ref. Only	Schottky, Si		DL	
152-0711-00	X	Ref. Only	Zener		DL	
152-0711-01	X	Ref. Only	Zener		DL	

PART NUMBER	** ND	JEDEC OR VENDOR NO.	TYPE	INDEX CHAR.	§§ STATUS	PAGE NO.
152-0712-00	A	CMX432A	V. Multr	3	CR	12-3
152-0713-00	A	SDA10388K	Rect, Br	35	CR	12-1
		∞ MDA3504				
152-0714-00	A	1N6098	Rect, Si	50	CR	12-2
152-0715-00	N	5083-2256 F1	Sig, Schottky		CR	12-4
		ND487C2-3P				
152-0716-00	A	CMX387A	V. Multr	7	CR	12-3
		∞ SCMA10784				
152-0717-00	X	Ref. Only	Sig, Si	5	DL	12-11
152-0717-01	X	Ref. Only	Schottky, Si		DL	
152-0718-00	N	PR100	Rect, Si	6	PP	12-2
		∞ TIR102A				
152-0719-00	A	1N5456	VVC	100	CR	10-2
		SMV1501				
152-0720-00	A	BYW29-100	Rect, Si	7	CR	12-2
152-0721-00	A	BYW30-100U	Rect, Si	12	CR	12-2
		UES702				
152-0722-00	N	DVH-6934-98	VVC	1.5	CR	10-2
152-0723-00	N	A2X1518	Sig, Schottky	5	CR	12-4
152-0725-00	A	5082-2810	Sig, Schottky	20	CR	12-4
		A2X1582				
		∞ A2S810				
152-0727-00	A	1N827	Zener	6.3	CR	11-1
		DT1029				
		SZG20246				
152-0728-00	A	5082-3188	Pin		CR	10-3
		SMV1453				
		∞ MPN3500				
152-0729-00	N	NSR8140SA	Rect, Si	30	CR	12-2
		R711A				
152-0730-00	N	1N2808A	Zener	10	CS	11-1
152-0731-00	A	BAV99	Sig, Si	70	CR	12-4
152-0732-00	A	1N5913B	Zener	3.3	CR	11-1
152-0733-00	A	1N5352B	Zener	15	CR	11-2
152-0734-00	A	MMBD914	Sig, Si	100	DC	
152-0735-00	A	BAW56 Fmly	Sig, Si	70	CR	12-4
152-0736-00	A	BAV70	Sig, Si	70	CR	12-4
152-0737-00	U	BYX36	Rect, Si		TC	
152-0738-00	A	GC-10580-015	VVC	1.2	CR	10-2
152-0739-00	N	BZXB4-C5V6	Zener	5.6	DL	11-1
152-0740-00	A	BAT-17	Sig, Schottky	4	DL	12-4
		MMBV101				
152-0741-00	A	MMD-835-001	Snap-Off	70	CR	10-3
		ND1571 Chip				
		∞ 5082-0008				
		∞ CVB1015A				
152-0742-00	A	1N3890R	Rect, Si	12	CR	12-2
		SR3452				
152-0743-00	U	No info			TC	
152-0744-00	A	1N747A	Zener	3.6	CR	11-1
152-0745-00	A	SZG30174	Zener	7	CR	11-1
		Z7.0V 2%				
		∞ SZ 7.0				
152-0746-00	A	SZG40053	Zener	14	CR	11-2
		Z14.0V 1%				
		∞ 1M14ZS1				
152-0747-00	N	MBDC501WP	Sig, Schottky	50	PP	12-4
152-0748-00	A	MA4E119	Sig, Schottky	5	CR	12-4
152-0749-00	A	1N5375B	Zener	82	CR	11-2
		5GN115				
		SZP40096				
152-0750-00	A	RKBPC606	Rect, Br	3	CR	12-1
152-0751-00	A	TD13419	Sig, Si	265	CR	12-4
152-0752-00	A	MR1-1600	Rect, Si	1	CR	12-2
		ERC27-15				
152-0753-00	U	60561200	Sig, GaAs	3	CR	12-4
152-0754-00	A	80SQ040	Rect, Si	8	CR	12-2
152-0755-00	A	MA4E145M4	Schottky, Si	7	CR	12-4
152-0756-00	A	1N4756A	Zener	47	CR	11-2
		A2S783				
		DMJ6777-97				
152-0757-00	A	1N4735A	Zener	6.2	CR	11-1
152-0758-00	U	RB151			SC	
152-0759-00	U	10DQ			SC	
152-0760-00	A	SZG30205	Zener	6.2	CR	11-1
		TD3811363				
152-0761-00	A	GZ04116C	Trans. Suppressor	1.5	CR	10-3
		TVP1505A				

∞ NOT A CURRENT VENDOR.

§§ FOR STATUS CODES, SEE PAGE 13-11.

** NEW DESIGN CODE FROM COMPONENT ENGINEERING:
A = Acceptable N = Not Recommended
X = Do Not Use U = Undefined

DIODE PART NUMBER INDEX (CONT)

TEK PART TO VENDOR NUMBER

PART NUMBER	** ND	JEDEC OR VENDOR NO.	TYPE	INDEX CHAR.	§§ STATUS	PAGE NO.
152-0762-00	A	SD-241	Rect, Si	30	CR	12-2
		SKS043				
		∞ VSK3040T				
152-0763-00	U	D003			SC	
152-0764-00	U	12MF5			SC	
152-0765-00	U	DF1			SC	
152-0766-00	N	MMBD501	Sig, Schottky	50	PP	12-4
152-0767-00	A	HVG126E	V. Multr	3	CR	12-3
152-0768-00	A	A115MX50	Rect, Si	5	PP	12-2
		∞ MR826				
152-0769-00	A	KBPC804	Rect, Br	6	CR	12-1
152-0770-00	A	QSCH-5806	Schottky	4	CR	12-4
152-0771-00		CMX537E	V. Multr		CR	12-3
		∞ SCMA10936				
152-0772-00	A	1N4734A	Zener	5.6	CR	11-1
		TD334330				
152-0777-00	A	SZG30343RL	Zener	27	CR	11-2
		TD3811402				
152-0778-00	A	SZG30337RL	Zener	22	CR	11-2
		TD3811401				
152-0779-00	A	RW02M	Rect, Br	.75	CR	12-1
152-0782-00	A	GP20J-009	Rect, Si	2	CR	12-2
		∞ GP20J				
		∞ SRS260				
		∞ SZP40105				
152-0783-00	A	1N5355B	Zener	18	OB	11-2
		SZP40105				
		5GN118				
152-0784-00	A	SRP600D-010	Rect, Si	5	CR	12-2
		SR3688				
		∞ MR822				
152-0787-00	A	ESJA25-12	Rect, Si	3	CR	12-2
		∞ QL12				
152-0788-00	A	5KP45	Trans. Suppressor	5	CR	10-3
152-0789-00	A	SR3681K	Rect, Si	3	CR	12-2
		RGP30M-007				
		∞ MR918				
152-0791-00	A	CMX554D	V. Multr	2	CR	12-3
		SCMA10921				
152-0793-00	A	ESAD83-004	Rect, Si	25	CR	12-2
152-0794-00	A	95-4269	Rect, Si	10	PP	12-2
		ESAC82-004				
152-0797-00	A	CMX452	V. Multr	2.5	MP	12-3
152-0798-00	N	MA4E278	Sig, Sch		CR	12-4
152-0799-00	A	689-1P	Rect, Br	15	CR	12-1
		RKBCTP15-02				
		SA9255				
152-0801-00	A	A4D4002	Rect, Si	1	PP	12-2
		TH331				
152-0803-00	A	DSH4787-91	Sig, Schottky	7	CR	12-4
		MA4E145				
152-0804-00	A	DMJ6777	Sig, Schottky	5	CR	12-4
152-0805-00	A	HVG128G	V. Multr	3	PP	12-3
152-0806-00	A	CMX647	V. Multr	3	PP	12-3
		MSL8513				
		VM189				
152-0807-00	A	1N4371A	Zener	2.7	CR	11-1
152-0808-00	A	UES1106	Rect, Si	1	PP	12-2
		DSR3400X				
152-0809-00	A	1NS349B	Zener	12	PP	11-1
152-0810-00	A	UES1403	Rect, Si	7	PP	12-2
		VHE1403				
		BYW29/150				
152-0811-00	A	MA4E424	Sig, Schottky	6	MP	12-4
152-0812-00	A	MA40487	Sig, Sil	55	PP	12-4
152-0814-00	A	BYV28	Rect, Si		PP	12-2
153-0001-00	X	Ref. Only	Zener		DL	11-5
153-0002-00	X	Ref. Only	Sig, Si		OB	12-11
153-0004-00	U	152-0299-00	Mat or Sel		CS	12-6
153-0005-00	X	Ref. Only	Zener		NP	11-5
153-0006-00	U	152-0288-00	Mat or Sel		OB	12-6
153-0007-00	X	Ref. Only	Mat or Sel		NP	12-6 & 9
153-0008-00	X	Ref. Only	Mat or Sel		NP	12-6
153-0009-00	U	152-0297-00	Mat or Sel		CS	12-6
153-0010-00	U	152-0298-00	Matched Set		CS	12-6
		152-0297-00				

PART NUMBER	** ND	JEDEC OR VENDOR NO.	TYPE	INDEX CHAR.	§§ STATUS	PAGE NO.
153-0011-00	X	Ref. Only	Misc.		DL	12-10
153-0012-00	X	Ref. Only			DL	12-10
153-0013-00	X	Ref. Only	Sig, Si		OB	12-11
153-0014-00	X	Ref. Only	Sig, Snap-Off		OB	12-12
153-0015-00	X	Ref. Only	Sig, Snap-Off		OB	12-12
153-0016-00	X	Ref. Only			DL	12-10
153-0017-00	X	Ref. Only	Zener		NP	11-5
153-0018-00	X	Ref. Only	Zener		NP	11-5
153-0019-00	X	Ref. Only	Zener		NP	11-5
153-0020-00	X	Ref. Only	Mat or Sel		OB	12-6
153-0021-00	X	Ref. Only	Tunnel		DL	10-4
153-0022-00	X	Ref. Only	Sig, Snap-Off		NP	12-12
153-0023-00	X	Ref. Only	Sig, Snap-Off		NP	12-12
153-0024-00	X	Ref. Only	Mat or Sel		OT	12-6
153-0025-00	A	152-0153-00	Mat or Sel		CR	12-6
153-0026-00	X	Ref. Only	Zener		NP	11-5
153-0026-01	N	152-0100-00	Mat or Sel		CS	12-6
153-0027-00	X	Ref. Only	Zener		NP	11-5
153-0028-00	X	Ref. Only	Mat or Sel		CS	12-6
153-0029-00	N	152-0141-02	Mat or Sel		CR	12-6
153-0030-00	N	SZG179	Mat or Sel		CR	12-6
153-0031-00	N	152-0233-00	Mat or Sel		CS	12-6
153-0032-00	A	152-0322-00	Mat or Sel		CS	12-6
153-0033-00	X	Ref. Only	Mat or Sel		CS	12-6
153-0033-01	X	Ref. Only	Mat or Sel		OT	12-6
153-0034-00	X	Ref. Only	Mat or Sel		CR	12-7
153-0035-00	X	Ref. Only	Mat or Sel		CS	12-7
153-0036-00	X	Ref. Only	Mat or Sel		CS	12-7
153-0037-00	A	QSCH-1599	Mat or Sel		CR	12-7
153-0038-00	X	Ref. Only	Mat or Sel		CR	12-7
153-0039-00	A	152-0061-00	Mat or Sel		CR	12-7
153-0039-01	X	Ref. Only	Sig, Si		CR	12-11
153-0039-02	X	Ref. Only	Sig, Si		DL	12-11
153-0039-03	X	Ref. Only	Sig, Si		DL	12-11
153-0040-00	N	152-0383-01	Mat or Sel		CR	12-6
153-0040-01	N	152-0383-02	Sig, Snap-Off		CR	12-7
153-0041-00	N	152-0383-02	Mat or Sel		CR	12-7
153-0042-00	X	Ref. Only	Tunnel		CR	10-4
153-0043-00	X	Ref. Only	Tunnel		NP	10-4
153-0043-01	N	Ref. Only	Tunnel		CS	10-4
153-0044-00	A	152-0322-00	Mat or Sel		CR	10-7
153-0044-01	A	152-0322-00	Mat or Sel		CR	12-7
153-0045-00	A	152-0322-00	Mat or Sel		CS	12-7
153-0046-00	X	Ref. Only	Sig, Si		OB	12-11
153-0047-00	X	Ref. Only	Mat or Sel		DL	
153-0048-00	X	Ref. Only	Mat or Sel		OT	12-7
153-0049-00	A	SZG192	Mat or Sel		CR	12-7
153-0050-00	A	SZG193	Zener	14.5	CR	11-2
153-0051-00	N	152-0061-00	Mat or Sel		CR	12-7
153-0052-00	N	152-0414-00	Mat or Sel		CS	12-7
153-0053-00	A	152-0322-00	Mat or Sel		CR	12-7
153-0054-00	N	153-0158-00	Mat or Sel		CR	12-7
153-0055-00	A	152-0141-02	Mat or Sel		CR	12-7
153-0056-00	N	152-0427-00	Mat or Sel		CR	12-7
153-0057-00	N	152-0246-00	Mat or Sel		CR	12-7
153-0058-00	A	SZG231-1	Zener	6.2	CR	11-1
153-0059-00	N	SZG137	Zener	4.75	CR	11-1
153-0060-00	X	152-0317-00	Mat or Sel		OT	12-7
153-0061-00	X	Ref. Only	Mat or Sel		CR	12-7
153-0062-00	A	152-0175-00	Mat or Sel		CR	12-7
153-0063-00	A	152-0127-00	Mat or Sel		CR	12-7
153-0064-00	X	Ref.Only	Mat or Sel		CS	12-7
153-0065-00	A	153-0246-00	Mat or Sel		CR	12-8
153-0066-00	A	152-0195-00	Mat or Sel		PP	12-8
153-0067-00	A	152-0212-00	Mat or Sel		CR	12-8
153-0068-00	A	152-0153-02	Mat or Sel		CR	12-8
153-0069-00	A	152-0520-00	Mat or Sel		CR	12-8
153-0070-00	N	155-0111-01	Matched Pair		PP	
		155-0112-01				
153-0071-00	A				CR	
153-0073-00	A	152-0153-02	Mat or Sel		CR	12-8
156-0106-00	N	CA3039	Diode Array		CR	10-3
156-0106-01	N	CA3039	Diode Array		CR	10-3
156-1450-00	N	CA3141E	Diode Array		PP	10-3
156-1540-00	A	FSA2619P	Diode Array		CM	10-3
156-1545-00	A	FSA2720M	Diode Array		PP	10-3

NOTES

§§ STATUS CODES

CR	Current Production
§EN	Engineering
PP	Pre-Prod
§CS	Customer Service
§NP	Non-Prod
§CL	Cancelled
§DL	Deleted
§OB	Obsolete Instrument
CM	Custom Mod Instrument
§DS	Digital Systems
§OT	Obsolescent Instrument
MP	Modified Part
LR	Last Supply Current
LS	Last Supply Customer Service
VN	Vendor
TC	Telequipment Current Prod.
IN	International
SC	Sony/Tek Current Prod.

THE STATUS IN THIS CATALOG WAS CORRECT AT THE TIME IT WAS PUBLISHED, BUT IT IS SUBJECT TO CHANGE.

§ TO USE A PART WITH THIS STATUS ON A NEW INSTRUMENT REQUIRES THAT A NEW PURCHASED PART INITIATION FORM (PPIF) BE INITIATED.

(A GLOSSARY OF TERMS FOR THESE STATUS CODES CAN BE FOUND ON PAGE 0-44.)

∞ NOT A CURRENT VENDOR.

** NEW DESIGN CODE FROM COMPONENT ENGINEERING:

A = Acceptable N = Not Recommended

X = Do Not Use U = Undefined

SEMICONDUCTOR DEVICE, DIODE
JEDEC TO TEK PART NUMBER

13

JEDEC NUMBER	TEKTRONIX PART NUMBER	CATALOG SECTION	INDEX CHARACTERISTIC VOLTS OR AMPS EXCEPT AS NOTED
1N53B	152-0362-00	Sig, Si	
1N78BMR	152-0256-00	Sig	
1N82A	152-0202-00	Sig	5.
1N87A	152-0129-00	Sig	23.
1N198	152-0186-00	Sig	80.
1N415D	152-0197-00	Sig	
1N486A Fmly	152-0242-00	Sig	225.
1N625	152-0095-00	Sig	25.
1N634	152-0025-00	Sig	125.
1N647 Fmly	152-0107-00	Rect	.4
1N647 Fmly	152-0426-00	Rect	.4
1N695	152-0005-00	Sig	25.
1N746A	152-0690-00	Zener	3.3
1N747A	152-0744-00	Zener	3.6
1N748A	152-0689-00	Zener	3.9
1N749A	152-0395-00	Zener	4.3
1N751A	152-0279-00	Zener	5.1
1N741A Fmly	152-0195-00	Zener	5.1
1N741A Fmly	152-0226-00	Zener	5.1
1N751A Fmly	152-0279-00	Zener	5.1
1N752A	152-0175-00	Zener	5.6
1N752A	152-0175-01	Zener	5.6
1N753A	152-0280-00	Zener	6.2
1N753A Fmly	152-0166-00	Zener	6.2
1N753A Fmly	152-0227-00	Zener	6.2
1N753A Fmly	152-0337-00	Zener	6.3
1N755 Fmly	152-0326-00	Zener	7.5
1N755A	152-0127-00	Zener	7.5
1N755A Fmly	152-0326-00	Zener	7.5
1N756A	152-0217-00	Zener	8.2
1N756A Fmly	152-0217-00	Zener	8.2
1N821	152-0461-00	Zener	6.2
1N827	152-0456-00	Zener	6.2
1N827	152-0727-00	Zener	6.3
1N829A Fmly	152-0526-00	Zener	6.35
1N935A	152-0123-00	Zener	9.
1N935AFmly	152-0124-00	Zener	9.
1N936 Fmly	152-0212-00	Zener	9.
1N937	152-0411-00	Zener	9.
1N938A Fmly	152-0174-00	Zener	9.
1N942	152-0589-00	Zener	11.7
1N944 Fmly	152-0171-00	Zener	11.7
1N957B	152-0647-00	Zener	6.8
1N958B	152-0127-00	Zener	7.5
1N959 Fmly	152-0437-00	Zener	8.2
1N959B Fmly	152-0217-00	Zener	8.2
1N960 Fmly	152-0611-00	Zener	9.
1N960B	152-0306-00	Zener	9.1
1N960B Fmly	152-0306-01	Zener	9.1
1N961B	152-0149-00	Zener	10.
1N961B	152-0514-00	Zener	11.
1N962B	152-0055-00	Zener	11.
1N963B	152-0168-00	Zener	12.
1N963B Fmly	152-0236-00	Zener	12.5
1N965B	152-0243-00	Zener	15.
1N966B	152-0571-00	Zener	16.
1N967B	162-0590-00	Zener	18.
1N968B	152-0304-00	Zener	20.
1N968B Fmly	152-0583-00	Zener	20.
1N969A	152-0119-00	Zener	22.
1N969B	152-0281-00	Zener	22.
1N970B	152-0265-00	Zener	24.
1N971B	152-0147-00	Zener	27.
1N972B	152-0282-00	Zener	30.
1N973B	152-0241-00	Zener	33.
1N976B	152-0283-00	Zener	43.
1N977B	152-0284-00	Zener	47.
1N978B	152-0255-00	Zener	51.
1N979B	152-0268-00	Zener	56.
1N980B	152-0285-00	Zener	62.
1N982 Fmly	152-0580-00	Zener	75.

JEDEC NUMBER	TEKTRONIX PART NUMBER	CATALOG SECTION	INDEX CHARACTERISTIC VOLTS OR AMPS EXCEPT AS NOTED
1N982B	152-0286-00	Zener	75.
1N983B	152-0357-00	Zener	82.
1N985B	152-0427-00	Zener	100.
1N986B	152-0287-00	Zener	110.
1N987B	152-0428-00	Zener	120.
1N988 Fmly	152-0288-00	Zener	140.
1N989B	152-0247-00	Zener	150.
1N991B	152-0289-00	Zener	180.
1N992B	152-0470-00	Zener	200.
1N1200 Fmly	152-0274-00	Rect	12.
1N203	152-0479-00	Rect	12.
1N1563A	152-0035-00	Rect	3.
1N2620	152-0105-00	Zener	9.3
1N2808A	152-0730-00	Zener	10.
1N2862 Fmly	152-0047-00	Rect	
1N2976 Fmly	152-0089-00	Zener	12.6
1N2989B	152-0480-00	Zener	30.
1N2997B	152-0096-00	Zener	51.
1N2999B	152-0311-00	Zener	56.
1N3002B	152-0312-00	Zener	75.
1N3016B	152-0290-00	Zener	6.8
1N3018B	152-0576-00	Zener	8.2
1N3020B	152-0120-00	Zener	10.
1N3022 Fmly	152-0059-00	Zener	12.6
1N3024B	152-0024-00	Zener	15.
1N3027B	152-0291-00	Zener	20.
1N3029 Fmly	152-0022-00	Zener	25.
1N3031B	152-0292-00	Zener	30.
1N3032	152-0213-00	Zener	33.
1N3032B	152-0293-00	Zener	33.
1N3033B	152-0294-00	Zener	36.
1N3034B	152-0229-00	Zener	39.
1N3036B	152-0394-00	Zener	47.
1N3037B	152-0150-00	Zener	51.
1N3041B	152-0101-00	Zener	75.
1N3042A	152-0044-00	Zener	
1N3042B	152-0295-00	Zener	82.
1N3044B	152-0087-00	Zener	100.
1N3045B	152-0305-00	Zener	110.
1N3046B	152-0100-00	Zener	120.
1N3047B	152-0417-00	Zener	130.
1N3048B	152-0510-01	Zener	150.
1N3064	152-0528-00	Sig	
1N3085	152-0028-00	Rect	150.
1N3182 Fmly	152-0269-00	VVC	33.pF
1N3194	152-0066-00	Rect	1.
1N3209	152-0088-01	Rect	15.
1N3497	152-0317-00	Zener	6.2
1N3497 Fmly	152-0486-00	Zener	6.2
1N3583	152-0002-00	Rect	100.m
1N3800B	152-0296-00	Zener	30.
1N3804B	152-0056-00	Zener	43.
1N3814B	152-0297-00	Zener	110.
1N3816B Fmly	152-0298-00	Zener	140.
1N3817B	152-0440-00	Zener	150.
1N3820B	152-0299-00	Zener	200.
1N3826A	152-0481-00	Zener	5.1
1N3828A	152-0309-00	Zener	5.6
1N3831 Fmly	152-0136-00	Four Layer	18-22
1N3890 Fmly	152-0397-00	Rect	12.
1N3890R Fmly	152-0742-00	Rect	12.
1N3997A	152-0519-00	Zener	5.6
1N3997AR	152-0573-00	Zener	5.6
1N3998A	152-0148-00	Zener	6.2
1N4004G	152-0066-01	Rect	400.
1N4004G	152-0066-03	Rect	400.
1N4005	152-0040-00	Rect	600.
1N4005G	152-0040-00	Rect	1.
1N4006GP	152-0353-00	Rect	800.
1N4007G	152-0704-00	Rect	1.
1N4152	152-0141-02	Sig	30.

SEMICONDUCTOR DEVICE, DIODE
JEDEC TO TEK PART NUMBER

JEDEC NUMBER	TEKTRONIX PART NUMBER	CATALOG SECTION	INDEX CHARACTERISTIC VOLTS OR AMPS EXCEPT AS NOTED
1N4152 Fmly	152-0141-03	Sig	30.
1N4152	152-0141-05	Sig	30.
1N4152 Fmly	152-0141-06	Sig	30.
1N4152	152-0185-00	Sig	30.
1N4370A	152-0688-00	Zener	2.4
1N4371A	152-0807-00	Zener	2.7
1N4372A	152-0278-00	Zener	3.
1N4441 Fmly	152-0170-00	Rect	25.m
1N4561	152-0563-00	Zener	5.6
1N4570	152-0464-00	Zener	6.4
1N4610 Fmly	152-0333-00	Sig, Si	5.5
1N4721	152-0198-01	Rect	3.
1N4733	152-0691-00	Zener	5.1
1N4734A	152-0772-00	Zener	5.6
1N4735A	152-0757-00	Zener	6.2
1N4739A	152-0512-00	Zener	9.1
1N4742A	152-0520-00	Zener	12.
1N4744A	152-0405-00	Zener	15.
1N4756 Fmly	152-0503-00	Snap	500.pS
1N4756A	152-0756-00	Zener	47.
1N4763A	152-0513-00	Zener	91.
1N4806 Fmly	152-0612-00	VVC	17.5 pF
1N4935	152-0398-00	Rect	200.
1N4936	152-0400-00	Rect	1.
1N4944	152-0400-00	Rect	400.
1N4947	152-0674-00	Rect	800.
1N4998A	152-0035-00	Rect	3.
1N4999	152-0418-00	Rect	3.
1N5000	152-0423-00	Rect	3.
1N5060	152-0066-00	Rect	1.
1N5283 Fmly	152-0328-00	Cur. Ref.	50.μ
1N5285	152-0490-00	Cur. Ref.	270.μ
1N5297		See 1N5299	
1N5298		See 1N5299	
1N5299	152-0460-00	Cur. Ref.	1.2
1N5349B	152-0809-00	Zener	12.
1N5352B	152-0733-00	Zener	15.
1N5355B	152-0783-00	Zener	18.
1N5375B	152-0749-00	Zener	75.
1N5380B	152-0669-00	Zener	120.
1N5386B	152-0705-00	Zener	180.
1N5456	152-0719-00	VVC	100.pF
1N5624	152-0198-00	Rect	3.
1N5625	152-0676-00	Rect	3.
1N5817	152-0581-00	Rect	1.
1N5820	152-0582-00	Rect	3.
1N5821	152-0633-00	Rect	3.
1N5823	152-0502-00	Rect	5.
1N5824 Fmly	152-0636-00	Rect	5.
1N5829	152-0540-00	Rect	25.
1N5832	152-0560-00	Rect	40.
1N5913B	152-0732-00	Zener	3.3
1N6098	152-0714-00	Rect	50.
1N63038	152-0599-00	Trans. V Supp.	1.5
3N255 Fmly	152-0488-00	Rect	200.
3N257 Fmly	152-0497-00	Rect	1.

COST CODE
(CC COLUMN)

CODE	≈ VALUE with -	≈ VALUE no suffix	≈ VALUE with +
A	.2¢	.5¢	.75¢
B	1.25¢	1.5¢	2¢
C	2.5¢	3¢	3.75¢
D	4.25¢	5¢	6¢
E	7¢	8¢	10¢
F	13¢	15¢	18¢
G	22¢	25¢	35¢
H	40¢	50¢	60¢
I	65¢	75¢	$1
J	$1.25	$1.50	$2
K	$2.50	$3	$3.75
L	$4.25	$5	$6
M	$7	$8	$10
N	$13	$15	$18
O	$22	$25	$35+

NOTE: Costs may vary from order to order due to order quantities, vendor, etc.

DIODE CASE DRAWINGS

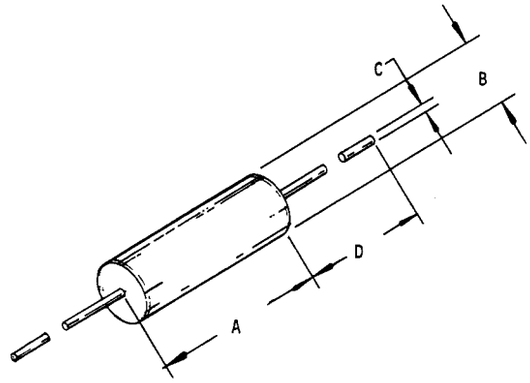

CASE STYLE	A MAX	B MAX	C MAX	D MIN
A1	.300	.125	.022	1.000
A1ay	.205	.107	.034	1.100
A1ee	.350	.145	.043	1.000
A1ey	.375	.205	.048	1.000
A1gq	.520	.385	.053	.750
A1xb	.630	.260	.022	.510
A1xj	.405	.122	.021	1.100
A1zu	1.500	.270	.034	1.500

CASE STYLE	A MAX	B MAX	C MAX	D MIN
A1zv	.405	.160	.024	.700
A48BK	1.020	.500	.034	1.000
A59	.260	.120	.034	1.000
A83a	.500	.160	.022	.375
A282	.380	.210	.052	1.060
A298m	.405	.127	.033	.400
DO-7	.300	.107	.022	1.000
DO-35	.200	.090	.034	1.100
DO-41	.205	.107	.022	.375

A 94g

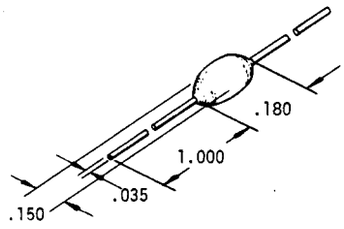

(Shown without DO-41 Shell)

A 249

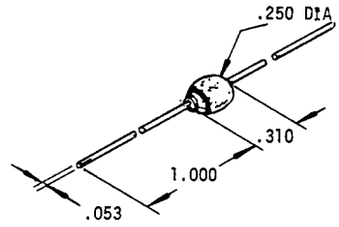

A 399a

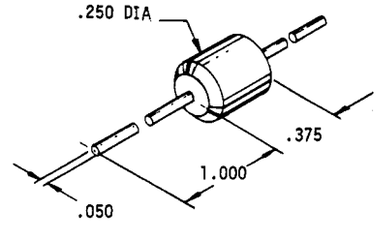

PACKAGE A

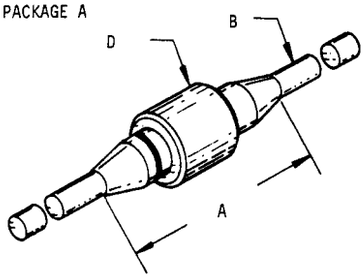

CASE STYLE	DIM A	DIM B	DIA
A60	.250	.029	.085
A146h	.250	.029	.085
A196p	.155	.021	.070

PACKAGE B

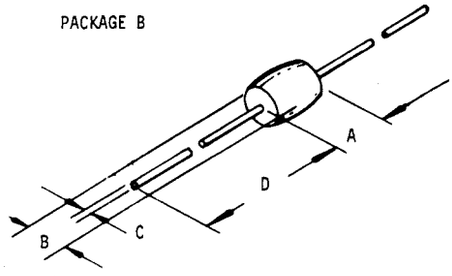

CASE STYLE	DIMENSIONS			
	A	B	C	D
A60	.165	.110	.042	.900
A146h	.165	.070	.031	1.000

A 31a

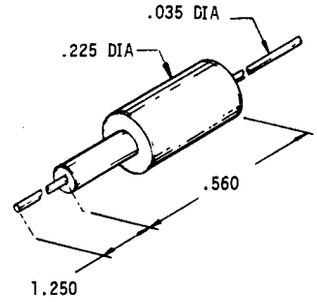

DIODE CASE DRAWINGS (CONT)

A 264

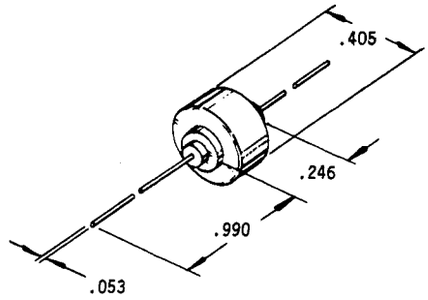

A 179c

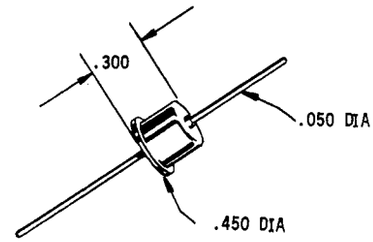

A 276

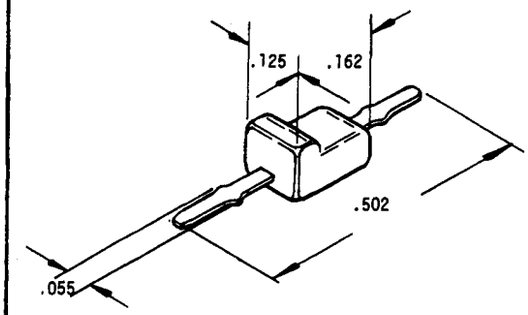

P1

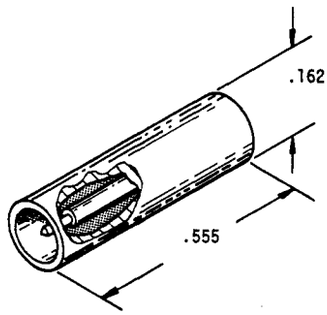

TO-3

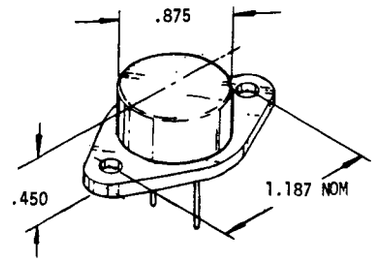

C5a

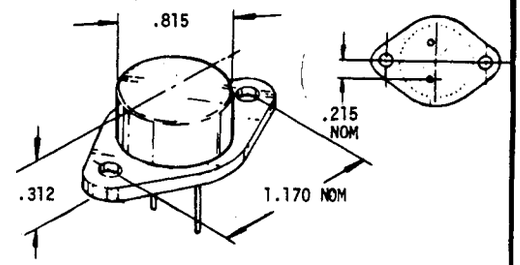

DO-4

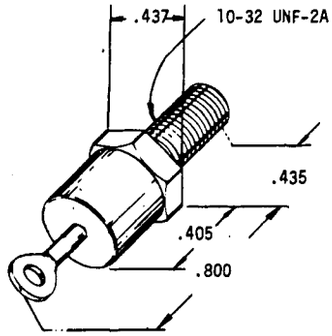

DO-5

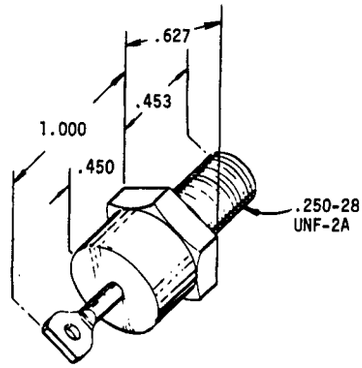

DO-30

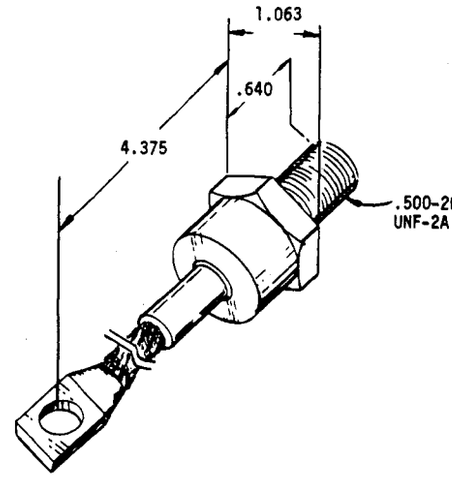

ALL DIMENSIONS MAXIMUM EXCEPT WHERE NOTED.

DIODE CASE DRAWINGS (CONT)

13

TO-92

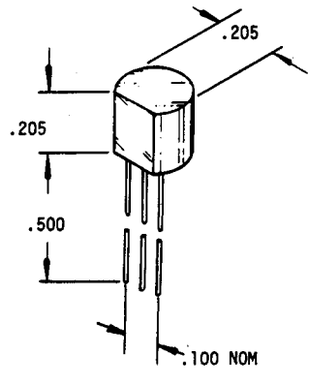

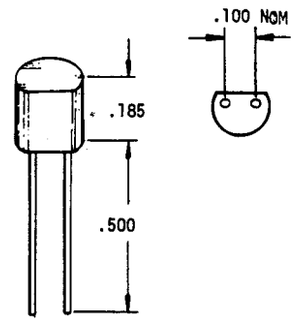

C 132

M 176

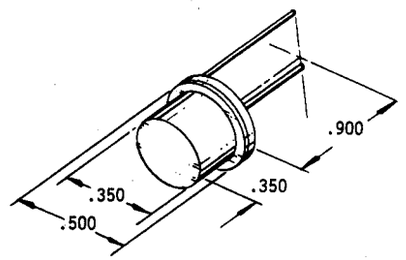

U 10

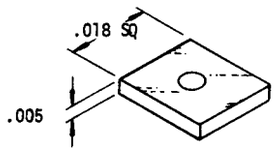

M 709

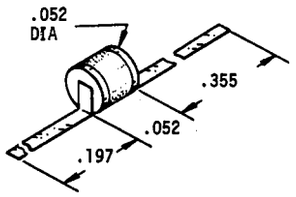

F 111

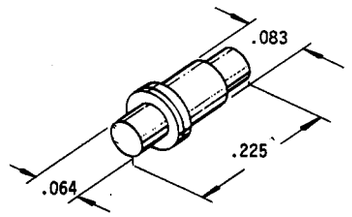

PILL

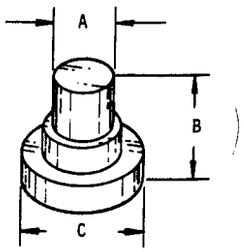

PART NUMBER	DIM A	DIM B	DIM C
152-0684-00	.064	.129	.123
152-0230-00	.066	.161	.130
152-0272-00	.066	.161	.130

A 330t (BEAM LEAD T)

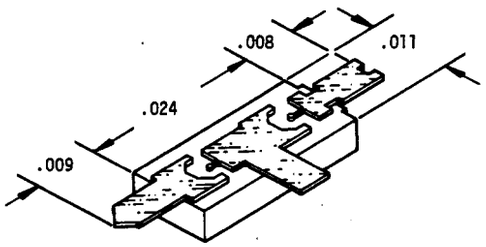

A 330

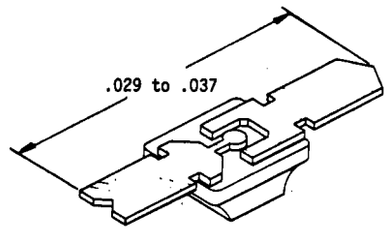

M 491g

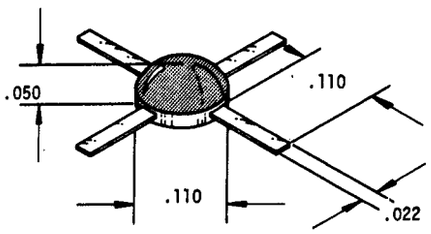

SOT-23

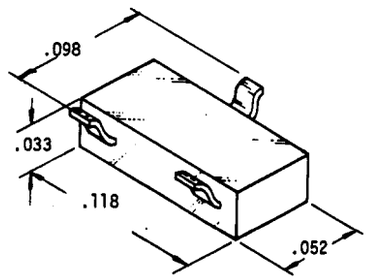

ALL DIMENSIONS MAXIMUM EXCEPT WHERE NOTED.

NOTES

COST CODE

(CC COLUMN)

CODE	≈ VALUE with -	≈ VALUE no suffix	≈ VALUE with +
A	.2¢	.5¢	.75¢
B	1.25¢	1.5¢	2¢
C	2.5¢	3¢	3.75¢
D	4.25¢	5¢	6¢
E	7¢	8¢	10¢
F	13¢	15¢	18¢
G	22¢	25¢	35¢
H	40¢	50¢	60¢
I	65¢	75¢	$1
J	$1.25	$1.50	$2
K	$2.50	$3	$3.75
L	$4.25	$5	$6
M	$7	$8	$10
N	$13	$15	$18
O	$22	$25	$35+

NOTE: Costs may vary from order to order due to order quantities, vendor, etc.

RELIABILITY NOTES

COMPONENT RELIABILITY DATA: CAUTION!

The Component reliability data listed in this catalog are compiled from Tek field failure data. As such, they represent historical information based on many different instrument applications and environments. Using a part with a particular rate does not guarantee that the part will exhibit that rate in the circuit. This is due to the dependence of the failure rate on application stress (voltage, current, temperature, mechanical stresses) and other factors which may determine the part failure rate to an even greater extent than application stress. Some of these factors are:

1. Dependence on typical or unspecified parameters for proper circuit operation.
2. Circuit characterization which did not anticipate component parameter distribution or account for variations in performances at high or low temperatures.
3. Effects of thermomechanical cycling stress, such as in a sweep circuit.
4. Safe operating area-second breakdown phenomena.
5. Susceptibility to burn-out by transients.
6. User-induced failure.
7. Poor maintenance technizues.

One might ask: Of what value is this reliability data? It is a comparative indicator of Tek's experience with that component. Parts having experience failure rates greatly different from the generic rates should trigger some questions about their use in new applications. For example, is there evidence the part has been misapplied or occasionally suffered abuse? Have the suppliers had difficulty making the part? Does the new application stress the parts to the same degree as earlier applications? Component Engineering or Component Reliability Engineering can assist in answering such questions. The value of the data is as a flag indicating we have experienced some kind of reliability problem with that part in the past.

HOW FAILURE RATES DEPEND ON APPLIED STRESS

Semiconductors

Models have been developed to represent, in a heuristic manner, the dependence of semiconductor failure rates on voltage and temperature stress. These models are based on the Arrhenius equation which for a physical process, describes the process rate dependence on temperature:

$$R = R_0 \exp - \frac{E_A}{kT_K}$$

where R = reaction rate
R_0 = a constant
E_A = activation energy in eV
k = Boltzmann's constant (8.6×10^{-5} eV/K)
T_K = absolute temperature in Kelvin

Thus, the acceleration factor (AF) for the failure rate is:

$$AF = \exp \frac{E_A}{k} \left[\frac{1}{T_1} - \frac{1}{T_2} \right]$$

Where T_1 is the test temperature (or a reference temperature) and T_2 is the desired temperature in degrees Kelvin. Figure 1 shows this factor normalized to the failure rate at 60°C junction temperature. Also shown is the effect of voltage stress (MIL-HDBK-217B model for bipolar transistors only.) Voltage stress ratio is defined as the ratio of operating V_{CE} to rated V_{CE}.

†† CATALOG RELIABILITY CODES

USAGE/YR	CODE
≥10	1
≥100	2
≥1 000	3
≥10 000	4
≥100 000	5
≥1 000 000	6
≥10 000 000	7

FAILURE FREQ	CODE		%/YR (median)
1/100 000	A	=	.001
1/50 000	B	=	.002
1/20 000	C	=	.005
1/10 000	D	=	.01
1/5 000	E	=	.02
1/2 000	F	=	.05
1/1 000	G	=	.1
1/500	H	=	.2
1/200	I	=	.5
1/100	J	=	1.0+

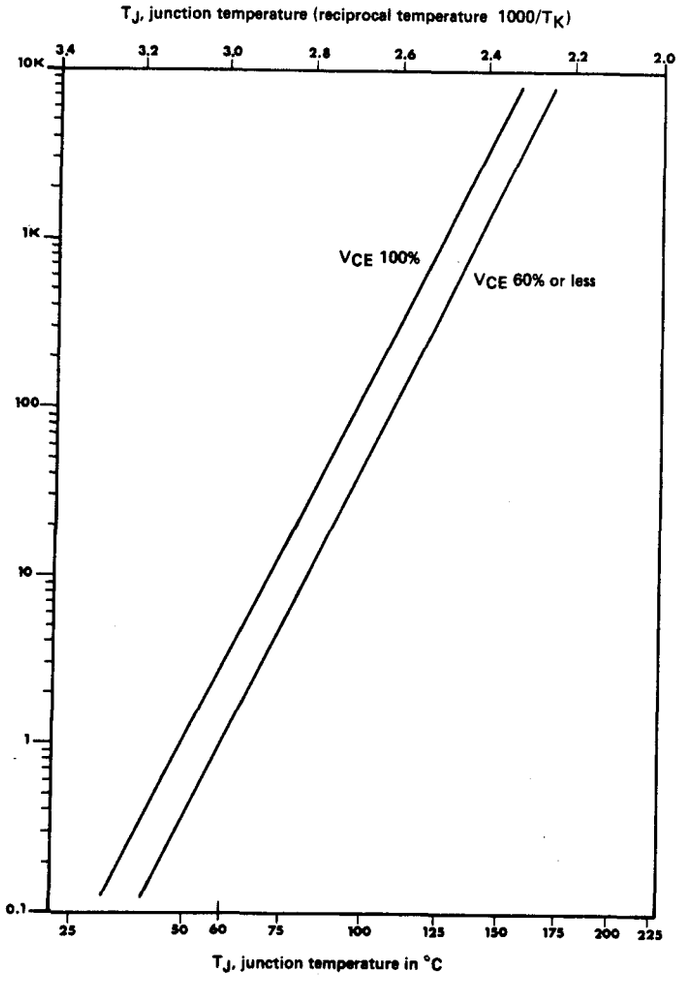

Figure 1 - Failure rate acceleration factors normalized to a failure rate of 1 at 60°C junction temperature. Effects of transistor voltage stress are indicated by the two lines for 100% and 60% voltage stress levels. For microcircuit acceleration factors, use the 60% line.

GENERIC FAILURE RATE DATA

	%/Warranty Year Tek Experience
Diodes	
Tunnel, Shockley, VVC, Snap	.05
Zener	.01
Power Rectifier	.02
Signal Switching	.002

IN ADDITION TO THE GENERIC FAILURE RATE DATA LISTED HERE, THIS SECTION LISTS THE EXPERIENCED FAILURE RATE DATA FOR MANY OF THE INDIVIDUAL PARTS.

APPLICATION NOTES

Zener diodes

Graphs are representative of average zener characteristics

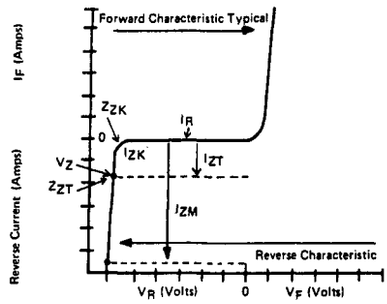

Zener Diode Characteristics

Forward current, I_F
Reverse current, I_R
Zener current, I_Z
Zener current near breakdown knee, I_{ZK}
Maximum DC zener current (power dissipation limited) I_{ZM}
Zener test current, I_{ZT}

Ambient temperature, T_A
Junction temperature, T_J

Forward voltage, V_F
Reverse Test voltage, V_R
Normal zener voltage, V_Z

Zener impedance, Z_Z
Zener impedance near breakdown knee (measured at I_{ZK}), Z_{ZK}
Zener impedance at test current (I_{ZT}), Z_{ZT}

Forward characteristics of a non-temperature compensated zener diode are equivalent to those of a normal diode. V_F is often specified at some I_F.

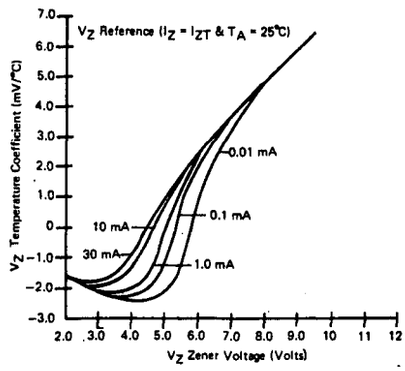

Temperature Coefficient Versus Zener Voltage @ 25 C Typical

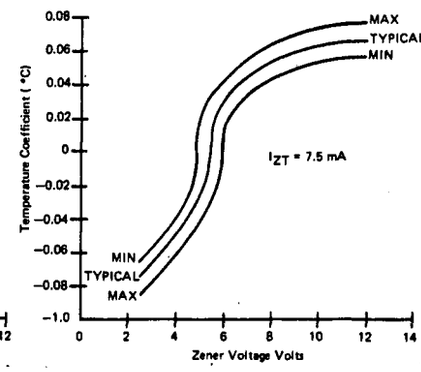

Temperature Coefficient Spread Versus Zener Voltage

Note that between 3 and 8 volts, current has an effect on TC aside from self-heating.

Temperature compensated diodes are made by selecting zener diodes and normal silicon diodes which have equal and opposite TC's. They are then encapsulated in one package. Example:

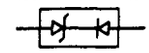

Note: A TC'ed diode is temperature compensated only at the specified test current. Any other current will yield a higher temperature coefficient than specified.

The slope of the $V_Z \cdot I_Z$ curve (in breakdown) is defined as zener impedance or resistance. The measurement is generally done with a 60 Hz current variation whose value is 10% in rms of the DC value of the current, i.e.,

change in I_Z peak to peak = 0.282 I_Z

This is really not a small signal measurement but is convenient to use and gives repeatable results.

Capacitance in a zener diode decreases with increasing reverse bias voltage as in any p-n junction diode until the zener breakdown region is reached where C_Z becomes essentially constant.

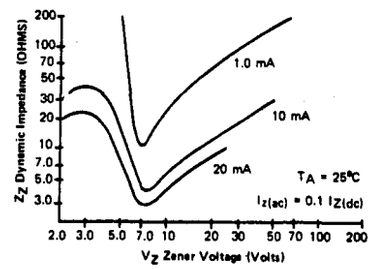

V_Z Zener Impedance (Typical) Versus Zener Voltage

For more information, contact Gary Sargeant, ext. 2540.

APPLICATION NOTES (CONT)

Hot carrier diodes

What are hot carrier diodes or Schottky barrier diodes? Compared to typical silicon diodes, the hot carriers have lower forward voltage drops and faster switching speeds. The lower forward voltage drops result in lower power losses, hence, improved efficiency.

Below is a graph comparing the forward voltage drops of hot carrier and typical silicon rectifiers. The ultra fast switching speeds are particularly important in high frequency power supplies to achieve high efficiency.

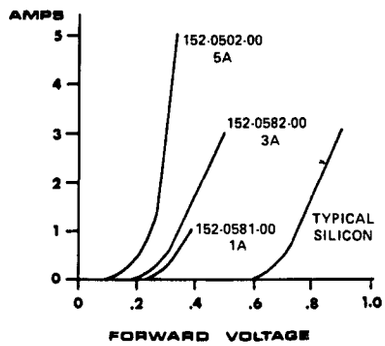

Figure 1 – Comparison of hot carrier diodes to a typical silicon diode.

The graph at right is a forward voltage comparison between a common small-signal silicon diode and a common small-signal hot carrier diode. The shaded area denotes the maximum and minimum forward voltage range.

The advantages gained in the forward direction with the hot carrier diodes are compromised in the reverse direction because of low breakdown voltage and relatively high leakage currents. At present, rectifiers with breakdown voltage up to 40 volts are available.

Reverse leakage currents are orders of magnitude greater than those of silicon diodes and increase further at high junction temperatures. The maximum junction temperature is 125°C as compared to 175°C for silicon rectifiers.

At high junction temperatures the maximum reverse voltage must be derated from that specified at lower junction temperatures.

Hot carrier diodes contain a semiconductor metal rather than the usual n-type to p-type semiconductor junction. The contact area between the metal and semiconductor material is much larger in the hot carrier diode, compared to the similarly constructed microwave barrier diode, and results in greatly increased current capability.

The hot carrier diode can be made using a variety of metals with n- or p- type semiconductor material. N-type material is usually chosen for its higher electron mobility.

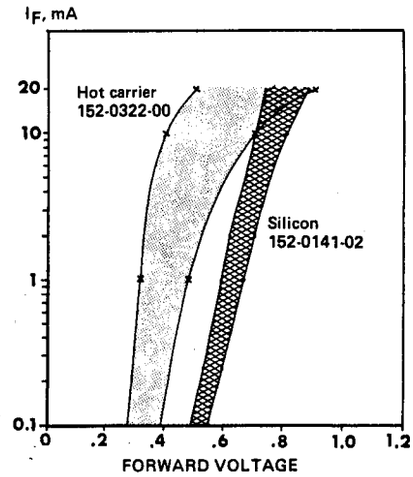

Figure 2 – Forward drop comparison

Contact Gary Sargeant, ext. 2540.

STATIC
SENSITIVE

HANDLING OF STATIC SENSITIVE COMPONENTS

MOST SEMICONDUCTOR PART TYPES, BOTH SEPARATELY AND IN ASSEMBLIES, HAVE BEEN FOUND TO BE SUSCEPTIBLE TO DAMAGE AT VOLTAGE LEVELS COMMONLY FOUND IN MANUFACTURING ENVIRONMENTS. THE SIMULATED STATIC DISCHARGE TESTS SHOWED THE FOLLOWING CATEGORIES TO BE ESPECIALLY SUSCEPTIBLE:

CATEGORIES	RELATIVE DEGRADATION LEVEL[1]
MOS OR CMOS MICROCIRCUITS OR DISCRETES OR LINEAR MICROCIRCUITS WITH MOS INPUTS	100 - 500
ECL	200 - 500
SCHOTTKY SIGNAL DIODES	250
SCHOTTKY TTL	500
HIGH FREQUENCY BIPOLAR TRANSISTORS	400 - 600
JFETS	600 - 800
LINEAR MICROCIRCUITS	400 - 1000 (est.)
LOW POWER SCHOTTKY TTL	900
TTL	1200

[1]VOLTS ON 100 pF CAPACITOR DISCHARGED THROUGH SERIES RESISTANCE OF 100 OHMS.

RECOMMENDATION:

SINCE ALMOST EVERY ASSEMBLY INCLUDES SOME OF THESE PARTS, WE RECOMMEND STATIC SENSITIVE PROCEDURES BE IMPLEMENTED FOR ALL OPERATIONS INVOLVING SEMICONDUCTOR PART HANDLING.

DIRECT ANY QUESTIONS TO:

RON SCHWARTZ, COMP. REL. ENG. EXT. 1605.

OPTOELECTRONIC DEVICES

14

SECTION 14

TABLE OF CONTENTS

PAGE(S)

LISTINGS
- LED DISPLAY 14-9
- DIGITAL DISPLAY, NEON 14-10
- DIGITAL DISPLAY, FLUORESCENT 14-10
- INFRARED EMITTERS 14-3
- LAMP,LED 14-6
  - CASE DRAWINGS 14-7
  - HOLDER, LAMP, LED 14-8
- OPTOISOLATORS 14-2
- PHOTODETECTORS 14-2
  - CASE DRAWINGS ..... 14-4 & 14-5

NOTES 14-13

CROSS REFERENCE INDEX ..... 14-11 & 14-12

APPLICATION NOTES ..... 14-14 & 14-15
- LED SPECTRUMS 14-14
- LED'S & PHOTOMETRY ..... 14-14 & 14-15

COST CODE

(CC COLUMN)

CODE	A	B	C	D	E	F	G	H	I	J	K	L	M	N	O
≈ VALUE with +	.75¢	2¢	3.75¢	6¢	10¢	18¢	35¢	60¢	$1	$2	$3.75	$6	$10	$18	$35+
≈ VALUE no suffix	.5¢	1.5¢	3¢	5¢	8¢	15¢	25¢	50¢	75¢	$1.50	$3	$5	$8	$15	$25
≈ VALUE with -	.2¢	1.25¢	2.5¢	4.25¢	7¢	13¢	22¢	40¢	65¢	$1.25	$2.50	$4.25	$7	$13	$22

NOTE: Costs may vary from order to order due to order quantities, vendor, etc.

CATALOG WRITER: NORMA PETERSON, EXT. 2577.

OPTOELECTRONIC DEVICES

OPTOISOLATORS

RESISTANCE (ON)	RESISTANCE (OFF)	SOURCE	DETECTOR	t_f ms	VOLTAGE (MAX)	POWER mW	ISOLATION STEADY STATE V_{RMS}	MANUFACTURER PART NUMBER	PART NUMBER	FIG. (P. 14-4 & 14-5)	CC	†† RC
30Ω	1M	Tung.	Photocell	180	100	65	900	CLM 4012A	307-0338-00	1	K-	
100Ω	400k	LED	Photocell	1,500	70	100	500	VTL2C4	307-0476-00	5	L-	
500Ω	100M	LED	Photocell	500	100	100	500	VTL2C2	307-1025-00	5	K+	
140Ω	400k	LED	Photocell	1,500	50	175	900	21L478	307-0700-00	12	K	4H
Reflective Sensor		LED	Transistor	.010 (Typ)	30	75		OPB706A	156-1217-00	9	K	
		LED	Transistor	.002 (Typ)	30	150	1,500	H11AX881	156-0109-00	2A	H+	3G
		LED	Transistor	.003 (Typ)	30	250	1,500	4N27	156-0399-00	2A	H-	
		LED	Selected	.002 (Typ)	30	150	1,500	SPX 7226	156-0109-01	2A	I	3G
		LED	Transistor	.025 (Typ)	30	150	1,500	4N26	156-0907-00	2A	G+	4H
		LED	Transistor	.007 (Typ)	30	150	3,000	MOC1005	156-0885-00*	2A	H	5F
		LED	Selected	.007 (Typ)	30	300	3,000	MOC1005	156-0885-01*	2A	H+	
		LED	Transistor	.007 (Typ)	30	300	3,000	H11AX940	156-0885-02	2A	I-	
Switch		LED	Transistor	.010	30	150		OPB814	156-1237-00	4	J	4G
		LED	Transistor	.010	30	150		OPB814	156-1237-01	4	J-	
Switch		LED	Darlington	.150 (Typ)	30	150		H21B1	156-0417-00	4	K	3J
		LED	Darlington	.150 (Typ)	25	50		K2136	156-0417-01	4	K	
		LED	Diode	.0008	15	100	1,000	6N136	156-1162-00	3B	J+	4F
Reflective Sensor		LED	Darlington	.600 (Typ)	304	250		MCA7	156-1148-00	8	K-	3F
		LED	SCR		400	400	1,500	H11CX604 MCS2400	156-1238-00*	2C	I+	
		LED						4N22	156-0283-00	15	K	
		LED	Triac Driver		115AC	300	4,500	MOC3010	156-1317-00*	2D	I-	3G
		LED	Triac Driver		115AC	300	4,500	MOC3020	156-1317-01	2D	J-	
		LED	Transistor				3,750	H11AV2	156-1689-00	2A	J	
		LED	Transistor	25ns	5	85	3,000	6N137	156-1384-01	2E	L	
		LED	Transistor	25ns	5	85	3,000	H11L2	156-1384-02	2E	J+	
		LED	Transistor	.050 (Typ)	55	150		H22A5	156-1440-00	10	J-	
		LED	Schmitt	15ns	7	40	1,000	HCPL2601	156-1522-00	3A	L-	
		LED	Darlington		30	250	3,750	4N29A	156-1562-00*	2F	H-	

PHOTODETECTORS

TYPE	DESCRIPTION			RISE TIME (TYP)	VOLTAGE (MAX)	POWER mW	CASE (SIMILAR)	MANUFACTURER PART NUMBER	PART NUMBER	(P. 11-4 & 11-5)	CC	†† RC	OTHER
PHOTORESISTOR	RESISTANCE (ON)	RESISTANCE (OFF)	PEAK SENS. nM										
	2k	1.3M	690	430 mS	100	50	TO-18	CL904L	307-0230-00	6	J		
	6k	40. M	735	50 mS	100	50	TO-18	CL903L	307-0268-00	6	J		
PHOTODIODE	AVALANCHE			.5nS	225	100	TO-18	C30921E	152-0792-00	11	O+		
PHOTOTRANSISTOR	PHOTOCURRENT												
	.6 mA min GaAs Source			3 μS	30		TO-18	FPT 100A	151-0252-00	7	H+		
	.7 mA min GaAs Source*			18 μS	20		TO-18	FPT 5122	151-0313-00	7	I	3G	
	.7 mA min GaAs Source*			18 μS	20		TO-18	FPT 5122	151-0313-01	7	K	3H	w/holder, wire & connector
	.7 mA min GaAs Source*			18 μS	20		TO-18	FPT 220	151-0628-00	7	I+		
	Selected pair							151-0252-00	153-0569-00	7	K-		
	1.1 mA min GaAs Source			18 μS	15		TO-18	FPT 120A	151-0648-00	7	I+	3F	
	.6 mA min GaAs Source			2.8μS	30		TO-18	FPT 110	151-0629-00	7	H	4F	

*Safety Controlled

OPTOELECTRONIC DEVICES (CONT)

INFRARED EMITTERS

VENDOR NUMBER	MAIN SPECTRUM LINE nM	I MAX mA	POWER OUT @ I mW	POWER OUT @ I mA	FIG	CASE (SEE PAGE 14-4 & 14-5) A MAX	B LEADS LENGTH MIN	B LEADS WIDTH	B LEADS THK	C MAX	D NOM	E NOM	F MAX	PART NUMBER	CC	†† RC	OTHER
LED-56	940	100	1.5 min	100	6	.255	.500	.017		.185	.040	.100	.219	152-0621-00	I+		
TIL38	940	150	12	100	14	.300	.750	.020	.020	.195	.045	.100	.230	150-1092-00	G-		
SPX3188-004	820	150	1.5	100	13	.765	.500			.689			.437	150-1104-00	O+		

14

†† CATALOG RELIABILITY CODES

USAGE/YR	CODE
≤10	1
≥100	2
≥1 000	3
≥10 000	4
≥100 000	5
≥1 000 000	6
≥10 000 000	7

FAILURE FREQ	CODE		%/YR (median)
1/100 000	A	=	.001
1/50 000	B	=	.002
1/20 000	C	=	.005
1/10 000	D	=	.01
1/5 000	E	=	.02
1/2 000	F	=	.05
1/1 000	G	=	.1
1/500	H	=	.2
1/200	I	=	.5
1/100	J	=	1.0+

For further explanation of this code, see page 0-25.

COST CODE
(CC COLUMN)

CODE	A	B	C	D	E	F	G	H	I	J	K	L	M	N	O
∿ VALUE with +	.75¢	2¢	3.75¢	6¢	10¢	18¢	35¢	60¢	$1	$2	$3.75	$6	$10	$18	$35+
∿ VALUE no suffix	.5¢	1.5¢	3¢	5¢	8¢	15¢	25¢	50¢	75¢	$1.50	$3	$5	$8	$15	$25
∿ VALUE with -	.2¢	1.25¢	2.5¢	4.25¢	7¢	13¢	22¢	40¢	65¢	$1.25	$2.50	$4.25	$7	$13	$22

NOTE: Costs may vary from order to order due to order quantities, vendor, etc.

OPTOELECTRONIC DEVICES CASE DRAWINGS

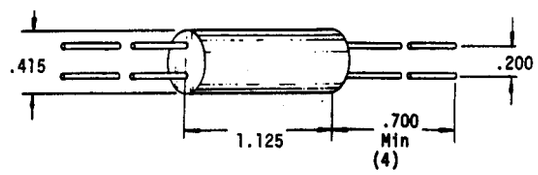

FIGURE 1

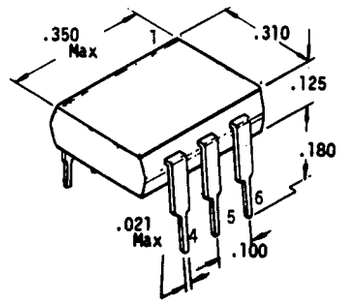

FIGURE 2

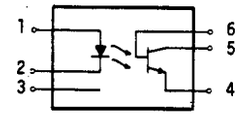

2A
156-0885-00
156-0907-00
156-0109-00
156-1689-00
156-0399-00

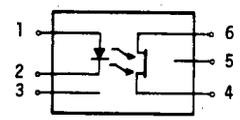

2B
156-1491-00

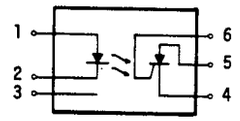

2C
156-1238-00

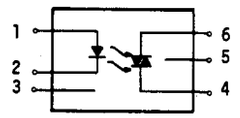

2D
156-1317-00

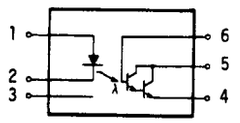

2E
156-1384-00

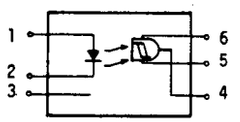

2F
156-1562-00

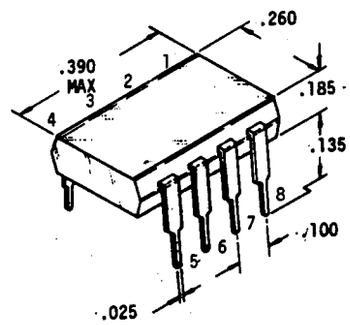

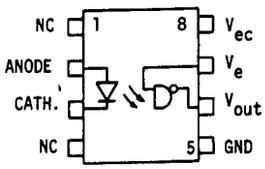

FIGURE 3A

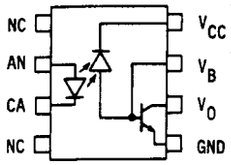

FIGURE 3B

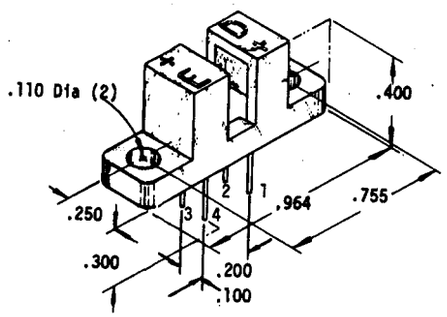

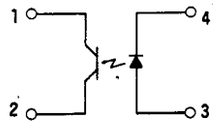

FIGURE 4

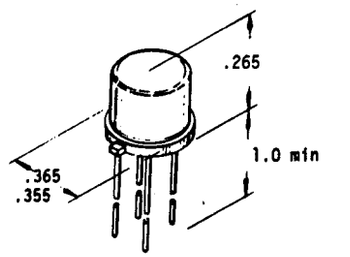

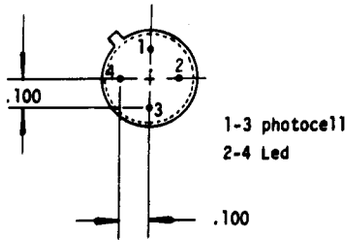

FIGURE 5

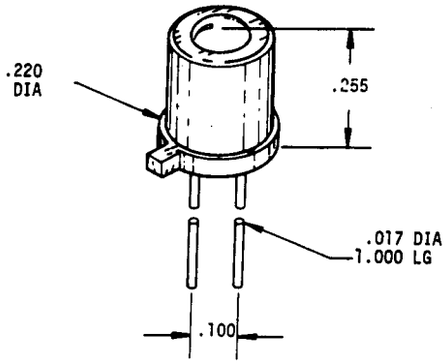

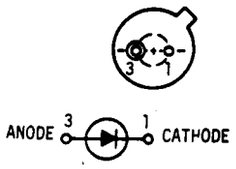

FIGURE 6

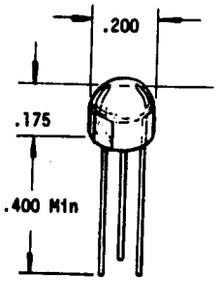

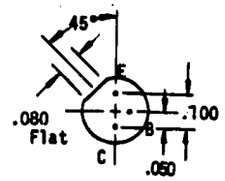

FIGURE 7

OPTOELECTRONIC DEVICES CASE DRAWINGS

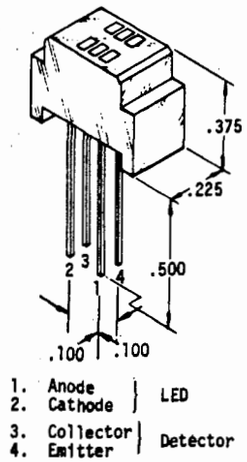

FIGURE 8

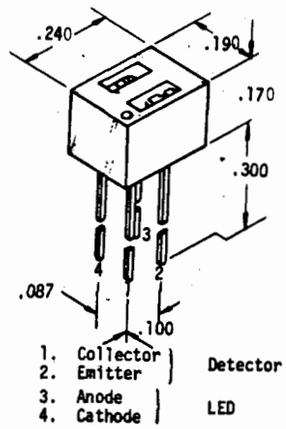

FIGURE 9

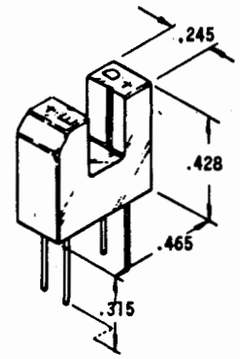

LEAD SPACING .284 x .100

FIGURE 10

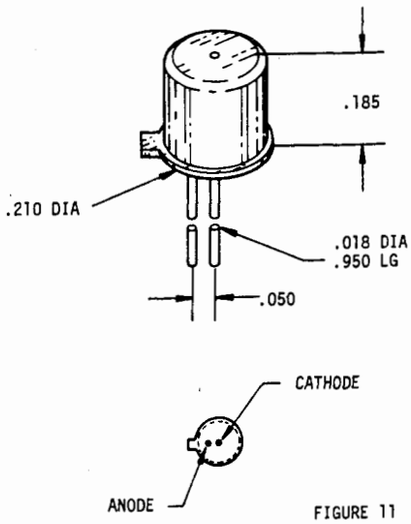

FIGURE 11

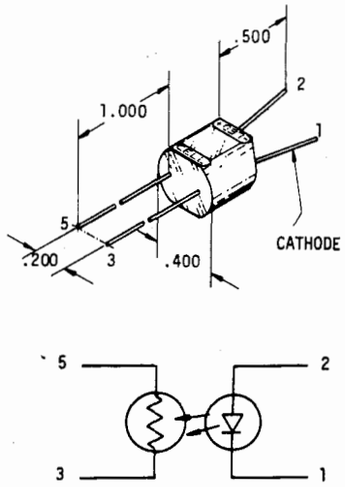

FIGURE 12

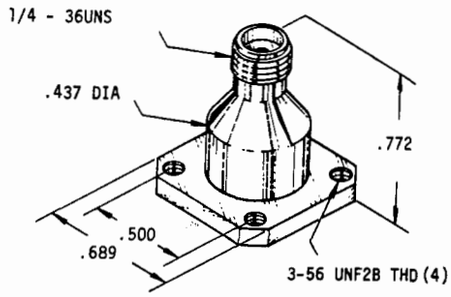

FIGURE 13

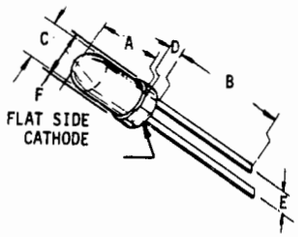

FIGURE 14

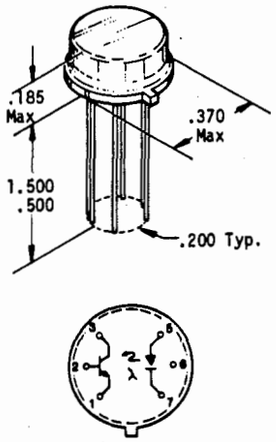

FIGURE 15

LAMP, LED

* R = Red D = Diffused
Y = Yellow C = Clear
G = Green F = Fresnel
W = White U = Untinted

COLOR	VENDOR NUMBER	MAIN SPECTRUM LINE nm	I MAX mA	TYPICAL INTENSITY @ I mcd	TYPICAL INTENSITY @ I mA	FIG	CASE (SEE PAGE 14-5) A MAX	B LENGTH MIN	B WIDTH	B THK	C MAX	D NOM	E NOM	F MAX	* LENS (See above)	PART NUMBER	CC	++ RC	OTHER
Red	LLL-7A	690.	40.	1.	5.	2	.275	.450	.019	.013	.090	.030	.050	.125	R, D	150-1040-00	F+	4F	Notch cathode
Red	LLL-7A	690	40.	1.	5.	2	.275				.090	.030	.050	.125	R, D	150-1040-01	J+	3I	W/wires, connectors, holder & housing
Red	FLV160	665.	50.	2.	20.	2A	.298	.620	.028	.027	.200	.062	.100	.240	R, D	150-1001-02	F-	5D	Flat or notch cathode
Red	558-0101-803	655.	50.	.8	20.	4	.468	6.000			.150	.188	.100	.190	R, D	150-1093-02	J+		W/Berg connectors
Red	HLMP-1301 SBR3431	635.	20.	2.	10.	2	.200	.560	.020	.020	.125	.040	.100	.135	R, D	150-1061-00	F	5E	Short lead cathode
Red	558-0101-003	655.	50.	.8	20.	4	.468	6.000			.150	.188	.100	.190	R, D	150-1093-00	H+	4D	W/connectors, blk lead cathode
Red	558-0101-804	655.	50.	.8	20.	4	.468	8.000			.150	.188	.100	.190	R, D	150-1093-01	J	4D	W/2 Berg connectors
Red	5082-4655 ESBR5531	635/660.	60.	7.	10.	2	.338	.630	.015	.015	.200	.035	.100	.240	R	150-1095-00			Flat or short LD cathode
Red	MV5024	660.	100.	3.	20.	2	.300	.580	.025	.025	.185	.040	.100	.230	R, D	150-1001-00	F-	4E	Flat or notch cathode
Red	MV5054-1	660.	100.	2.	10.	2	.300	.750	.020	.020	.200	.040	.100	.230	R, D	150-1014-00	E+	4F	Flat side cathode
Red	559-0101-824	655.	50.	1.5	20.	4	.625	.250	.025	.025	.250	.210	.125	.281	R, D	150-1052-00	G+	4C	+ sign anode
Red	HLMP-2620	635.	60.	10.	20.	13	.800	.160			.400	.245	.300	.100		150-1112-00			4 element light bar
Red	RL-50 MV-50	650.	40.	1.4	20.	1	.110	.860	.025	.010				.110	U, C	150-1000-00	F		Cross bar cathode
Red	TIL209A	650.	40.	.5 min	20.	2	.170	.500	.024	.024	.130	.040	.050	.160	R, D	150-1031-00	E	4E	Flat side cathode
Red	57642	635.	20.	2.5	20.	2	.135	.100	.018	.018	.125	.040	.100	.135	R, D	150-1115-00			Short lead cathode
Red	LD468	650.	35.	.5	20.	10	.820	.075	.023	.007	.087	.087			R, D	150-1106-00	J+		In-line package
Red	RL4480-1 LL201R	650.	40.	1.5	20.	2	.170	1.000	.020	.020	.125	.030	.100	.155	R, D	150-1077-00	E+	4F	Flat or notch cathode
Red	MV-5074C XC2090	660.	40.	2.5	20.	2	.190	.600	.014	.014	.125	.020	.050	.160	R, D	150-1036-00	F+	5E	Flat side cathode
Red	5321F-1	650.	40.	1.5	20.	11										150-1107-00	G+		W/holder (right angle)
Red	HLMP-3200	655.	50.	1.2	20.	2	.240	1.000	.018	.015	.250	.060	.100	.250	R, D	150-1001-01	F	4D	Mtg. hdwr. is not supplied
Red	RL-T1	650.	40.	.8	20.	2	.200	1.000	.020	.020	.125		.075	.125	R, D	150-1050-00	F+	4G	Short lead cathode
Red	MV57124	635.	35.	4.	20.	8	.275	.800			.250	.150	.100		R, D	150-1070-00	G		Rectangular
Red	HLMP6320	635.	10.	3.	10.	7	.115	.300	.022	.008	.075	.085			R, D	150-1068-00	G-		
Red	HDSP-4820	655.	25.	.88	20.											150-1083-00	J+		
Red	249-7868-3731-504	655.	35.	.8	20.	12	.875	.187			.312	.281				150-1108-00	K		
Red	550-2406-100	635.	30.	4.	10.	9	.245	.340	.020	.020	.185	.365	.100	.187	R, D	150-1090-00	H		Short lead cathode, Right angle PCB mount
Red	5082-4658	635.	20.	24.	10.	2	.338	1.000	.025	.016	.200	.035	.100	.240	R, C	150-1059-00	H+	2H	
Red	555-2007	650.	6.V	.6	5.V	3	.250	.135	.027	.017	.200	.096	.100		R, D	150-1020-00	H+		+ sign anode
Red	MV5774C	635.	35.	5.	20.	2	.210	.600	.014	.014	.130	.020	.055	.160	R, D	150-1043-00	F	5B	Flat side cathode
Red/Grn	521-9178	695/555.	15/30.	1.5	10/20	5	.298	.807	.020	.020	.187	.047	.100	.230	C, D	150-1049-00	I-	4C	Tri-State
Red/Grn	XC5491	690/565.	25.	1.8	10.	2	.310	.900	.025	.025	.200	.200	.100	.230	C, D	150-1091-00			Tri-State
Org/Grn	CQX95	630/560.	30.	6.	20.	5	.295	.960	.019	.019	.197	.078		.230	W	150-0755-00	J-		Tri-State
Yellow	QLMP-0449	583.	30.	1.8 min	15.	14	.315	.940	.025	.017	.295	.100	.100			150-1105-00	G+		
Yellow	HLMP1401	585.	20.	4.	10.	2	.190	.600	.025	.014	.130	.020	.060	.160	Y, D	150-1033-00	F	4C	Short lead cathode
Yellow	MV5374C	585.	35.	4.	20.	2	.190	1.000	.025	.014	.130	.020	.060	.160	Y, D	150-1064-00	F-	4C	Flat side cathode
Yellow	MV5352 5082-4558	585.	20.	45.	20.	2	.300	.775	.020	.020	.200	.040	.100	.230	Y, C	150-1065-00	H-		Flat side cathode
Yellow	5082-4150	583.	20.	2.	10.	7	.115	.450	.020	.008	.075	.080			Y, D	150-1096-00			
Yellow	MV53124 LLM3124Y	585.	35.	4.	20.	8	.265	.800	.020	.020	.250	.150	.100		Y, D	150-1073-00	G		Rectangular
Yellow	558-0301-003	580.	20.	1.5	10.	4	.468	6.000			.150	.188		.190	Y, D	150-1101-00	I+		6" leads, red & black (cathode)
Yellow	XC-5569-Y MV5353	585.	30.	5.	20.	2	.300	.800	.025	.025	.200	.040	.100	.230	Y, D	150-1032-00	F	4D	Flat side cathode
Yellow	550-0305-804	580.	50.	5.	20.	6	.380	.340	.020	.020	.185	.245	.100		Y, D	150-1063-00	H-	5E	Short lead cathode
Green	XC556-62 MV64530	565.	20.	3.	20.	2	.338	.572	.025	.016	.200	.035	.100	.240	G, D	150-1071-00	F+		Flat side cathode
Green	QLMP-0549	572.	30.	1.6 min	15.	15	.315	.940	.025	.017	.295	.100	.100			150-1109-00	G+		
Green	HLMP1502 SPG3931	565.	30.	3.	20.	2	.176	.748	.025	.020	.125	.040	.100	.135	G, D	150-1078-00	H-		Short lead cathode
Green	54643	562.	20.	2.	20.	2	.133	.100	.018	.018	.125	.040	.100	.135	G, D	150-1116-00			Short lead cathode
Green	559-0201-003	560.	35.	5.	20.	4	.625	6.000	.025	.025	.250	.210	.125	.281		150-1089-00			6" leads, red & black (cathode)
Green	558-0201-804	560.	30.	1.5 min	10.	4	.468	6.000			.150	.188		.190	G, D	150-1054-00	I	4D	6" leads, red & black (cathode)
Green	558-0201-802X	560.	30.	1.5	10.	4	.468	6.000			.150	.188		.190	G, D	150-1054-01	J+		W/2 Berg connectors
Green	559-0201-001	560.	35.	.8 min	20.	4	.625	.250	.025	.025	.250	.210	.125	.281	G, D	150-1055-00	I-		Short lead cathode
Green	LSM-16L-100	555.	55.	4.5	40.	2	.310	.750	.0195	.0195	.205	.063	.100	.235	G, D	150-1017-00	H+	4F	Flat side cathode
Green	MV5274C	565.	35.	1.	20.	2	.190	1.000	.014	.014	.130	.020	.055	.160	G, D	150-1029-00	F-	4C	Flat side cathode
Green	MV5274C	565.	35.	1.	20.	2	.190				.130	.020	.055	.160	G, D	150-1029-01	K		W/wires, conn & housing
Green	5082-4190	565.	30.	1.5	20.	7	.115	.450	.020	.008	.075	.080			G, D	150-1097-00	G		
Green	550-2206	565.	35.	3.	20.	9	.245	.135			.185	.355	.100	.187		150-1111-00	I-		R. angle, PCB mount
	MMH321V NSC5020	660.	70.		20.											150-1026-00	E+		Die Chip

FOR RELIABILITY CODES, SEE PAGE 14-3.

LAMP, LED, CASE DRAWINGS

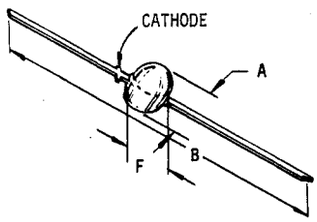

FIGURE 1

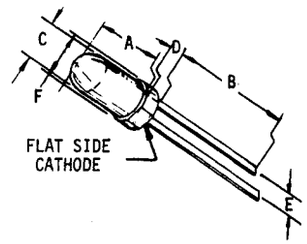

FIGURE 2
(MOUNTING HARDWARE WITH FIGURE 2A)

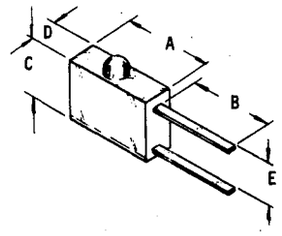

FIGURE 3

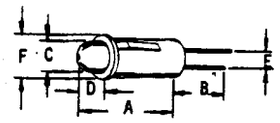

FIGURE 4

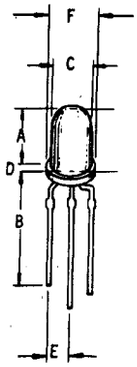

FIGURE 5

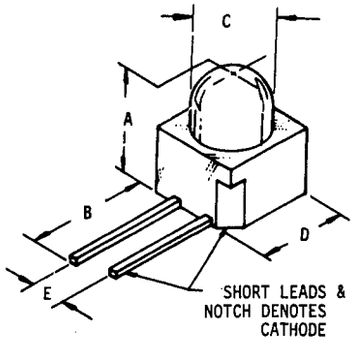

FIGURE 6

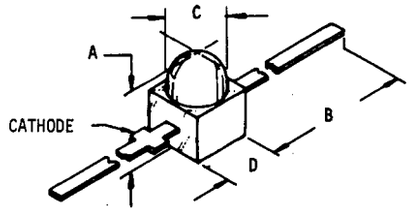

FIGURE 7

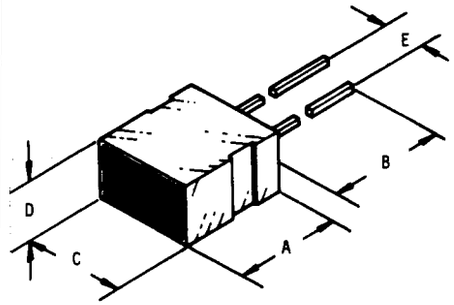

FIGURE 8

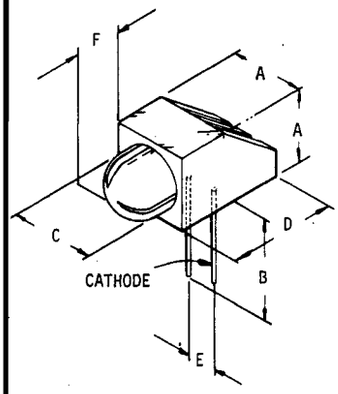

FIGURE 9

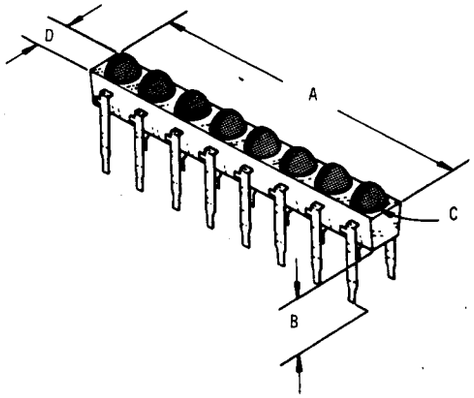

FIGURE 10

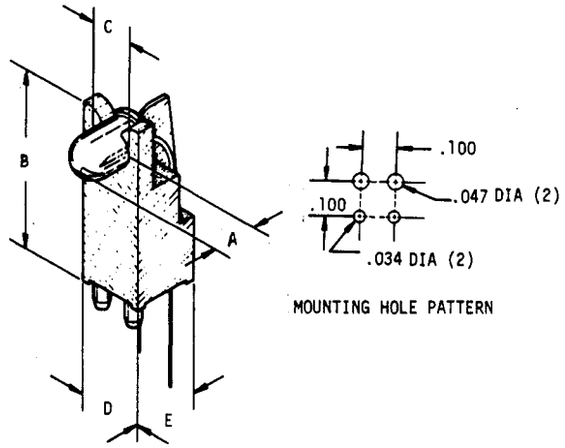

FIGURE 11

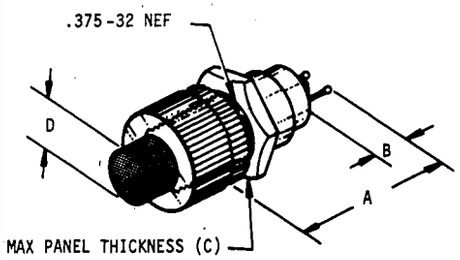

FIGURE 12

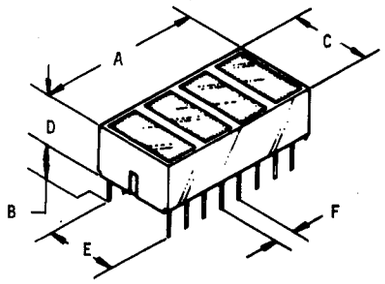

FIGURE 13

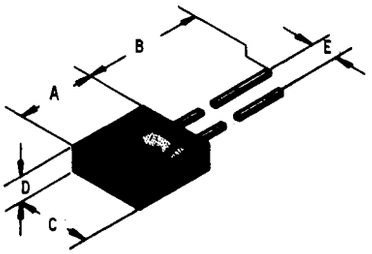

FIGURE 14

HOLDERS, LED

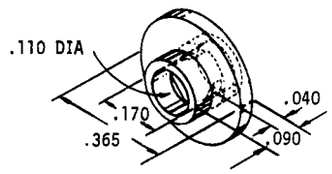

352-0419-00 CC: D

254-0990-00 Polypropylene, Black

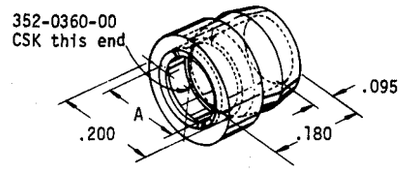

352-0360-00 (A) .082 DIA
352-0360-01 (A) .117 DIA

255-0616-00 Rubber Thermoplastic, Black CC: F+

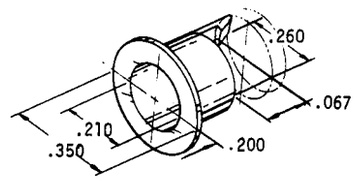

352-0477-00 CC: E

255-0504-00 & 255-0613-00
Polycarbonate, Black

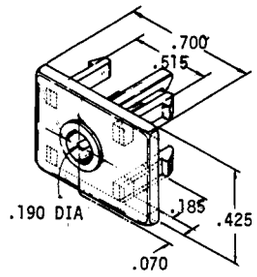

P. N.	Nomenclature	CC
352-0433-00		F
352-0433-01	(WAIT)	G
352-0433-02	(CD)	G
352-0433-03	(SCD)	G

255-0565-01 Polycarbonate, TV Gray

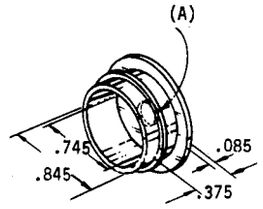

352-0361-00 (A) .080 MAX DIA
352-0367-00 (A) .129 MAX DIA
352-0358-00 (A) .187 MAX DIA

255-0010-00 Acetal Resin, Black CC: G+

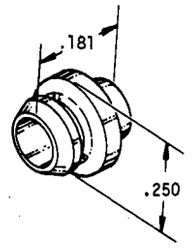

352-0451-00 CC: G-

255-0616-00 Rubber, Black
(Thermoplastic)

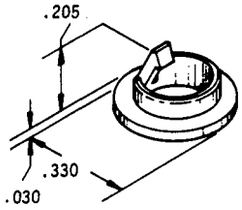

352-0699-00 CC:

Front Panel Adapter (Press Fit)
Panel Thickness .060 - .250
Mounting Hole DIA .265 ± .003, Plastic

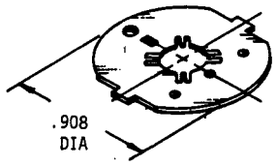

352-0535-00 CC: G+

.010 Phosphor Bronze (251-0448-00)

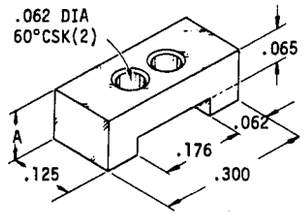

352-0522-00 (A) .100
352-0522-01 (A) .175

255-0330-00 Polysulfone
CC: E-

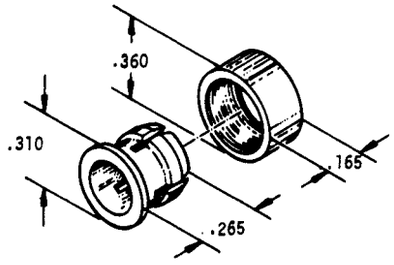

352-0700-00 CC:

Panel Thickness .125 Max.
Mounting Hole .250 DIA
Black Plastic

LENS, LIGHT: HOLDER

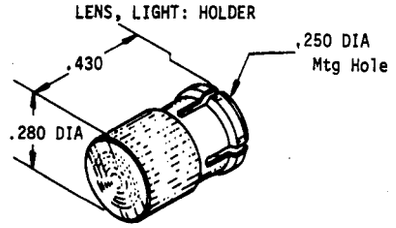

378-0175-00 - Red CC: F+
378-0176-00 - Amber
378-0177-00 - Green

Cellulose Acetate Butyrate

LED DISPLAYS

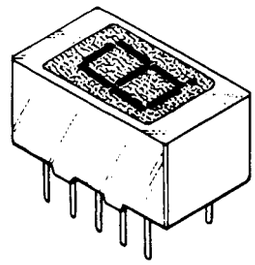

FIGURE 1

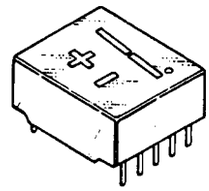

FIGURE 2

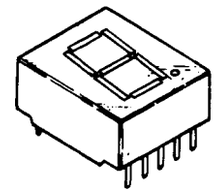

FIGURE 3

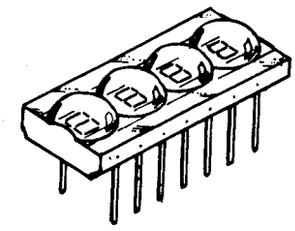

FIGURE 4

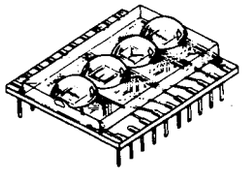

FIGURE 5

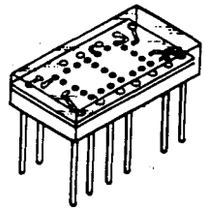

FIGURE 6

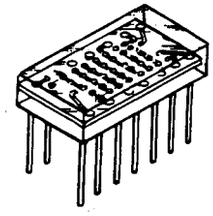

FIGURE 7

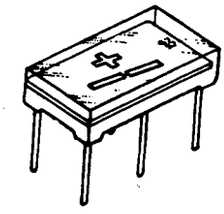

FIGURE 8

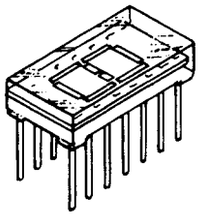

FIGURE 9

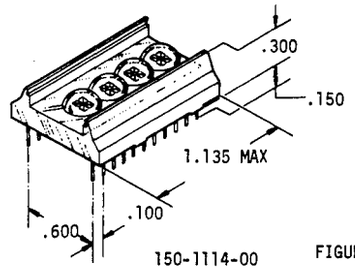

150-1114-00

FIGURE 10

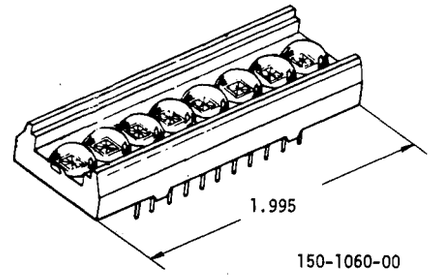

150-1060-00

COLOR	CHARACTER DIGIT	CHARACTER HEIGHT	CHARACTER SPACING	**	MAIN SPECTRUM LINE nm	I MAX mA	TYPICAL INTENSITY @ I mcd	TYPICAL INTENSITY @ I mA	FIG	VENDOR NUMBER	PART NUMBER	ND	*	CC	†† RC
Red	1	.362	.300	RHDP	650.	25.	.90	20.	1	Set of 5 (150-1011-02)	150-1011-04	N		L+	
Red	1	.362	.300	RHDP	650.	25.	8.93	20.	1	FND 5169	150-1011-01	N	CC	I	5E
Red	1	.362	.300	RHDP	650.	25.	.90	20.	1	FND5136	150-1011-02	N		I+	4E
Red	1	.362	.300	RHDP	665.	25.	.45	20.	1	FND357	150-1011-03	N	CC	J-	
Red	1	.294	.400	±1	660.	20.	.51	10.	8	MAN 73A	150-1069-00			I+	
Red	1	.300	.400	LHDP	660.	10.	.11	10.	7	TIL305	150-1051-00			K	
Red	1	.500	.600	±1 RHDP	650.	25.	.60	20.	2	FND508	150-1045-00	N	CA	J-	
Red	1	.500	.600	±1 RHDP	650.	25.	.60	20.	2	Selected	150-1045-01	N	CA	J	
Red	1	.500	.600	RHDP	650.	25.	.60	20.	3	FND507	150-1046-00	N	CA	I+	
Red	1	.500	.600	RHDP	650.	25.	.60	20.	3	Matched set of 5	150-1046-01	N	CA	M-	3F
Red	1	.362	.300	RHDP	650.	25.	.90	20.	1	FND360	150-1117-00				
Red	4	.110	.200	RHDP	700.	10.	1.50	5.	4	With frame & filter	150-1012-03			M	3F
Red	4	.110	.200	RHDP	700.	10.	1.50	5.	4	DL34m (Selected)	150-1012-04		CC	L+	
Red	4	.110	.200	RHDP	700.	10.	1.50	5.	4	With frame & filter	150-1012-06			M	
Red	4	.110	.200	RHDP	700.	10.	1.50	5.	4	With frame & filter	150-1012-07				
Red	4	.150	.250	LHDP	655.	7.	1.65	30, 1/16 DF	10	HDSP-6504	150-1114-00		CC	N	
Red	8	.150	.250	LHDP	655.	7.	1.65	30, 1/16 DF	10	HDSP-6508	150-1060-00		CC	O-	
Red	Hexadecimal with logic	.270	.400	RHDP	660.	7 Volt	.10	5 Volt	6	TIL311	150-1013-00			M-	3E
Orange	1	.300	.150	LHDP	630.	20.	.51 min	10.	9	MAN3620 A	150-1037-00		CA	I+	
Orange	1	.294	.150	±1	630.	20.	.51 min	10.	8	MAN3630 A	150-1038-00		CA	J-	
Orange	1	.400	.150	RHDP	630.	20.	.51 min	10.	9	MAN4640 A	150-1048-00		CC	J-	4E
Orange	1	.400	.150	RHDP	630.	20.	.51 min	10.	9	MAN4610 A	150-1053-00		CA	J-	4D
Orange	1	.400	.150	±1	630.	20.	.51 min	10.	8	MAN4605 A	150-1066-00			I	5D
Orange	1	.300	.400	LHDP	650.	30.	.30	20.	9	MAN 72A	150-1022-00		CA	I-	4D

** RHDP = RIGHT HAND DECIMAL POINT
LHDP = LEFT HAND DECIMAL POINT

* CC = COMMON CATHODE
CA = COMMON ANODE

NEW DESIGN RECOMMENDATION FROM COMP. ENG.
N = Not Recommended

DIGITAL DISPLAY

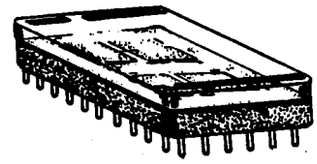

Note: All units contain a mixture of Neon & Mercury gasses.
Major Spectral Lines at 590, 620 & 650 nm.
All units are of Common Anode construction.

NEON, 7 SEGMENT, ORANGE

DIGITS	CHARACTER		OPER I_f µA		STRIKING V	LIGHT OUTPUT		SOCKET	VENDOR NUMBER	PART NUMBER	CC	RC ††
	HEIGHT	SPACING	MIN	MAX	MIN	NOM	@ µA					
1-1/2	.330	.375	70.	250.	160.	210fl	180.		SP-331-02	150-1039-01*		3G
2	.330	.375	70.	250.	160.	210fl	180.	136-0565-00	SP-332	150-1015-00 ◆	K	
2	.330	.375	70.	250.	160.	210fl	180.	136-0565-00	SP-332-01	150-1015-01*		3
3	.33	.375	70.	250.	160.	210fl	180.	136-0556-00	SP-333	150-1016-00	L	

* These devices contain small amounts of Krypton gas to reduce initial ionization time to 5 sec. max at 160V.

FLUORESCENT

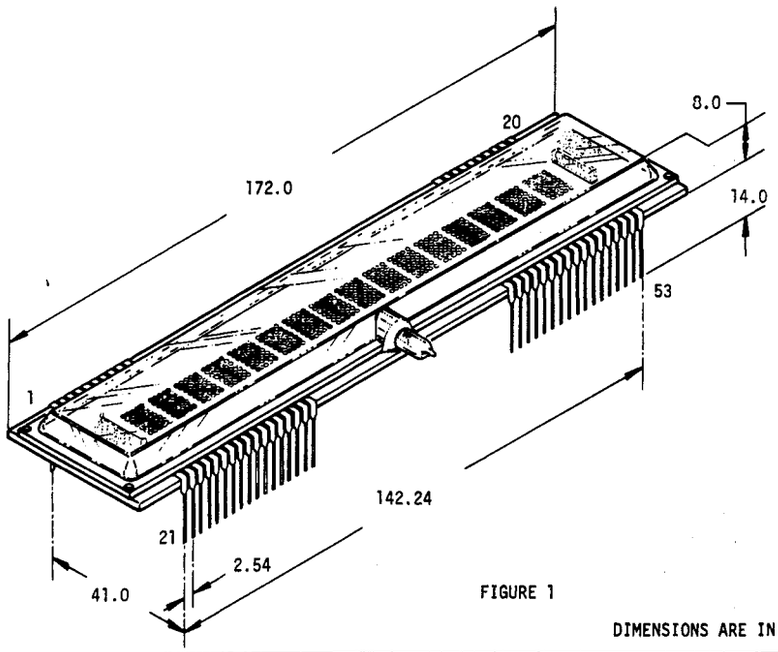

FIGURE 1

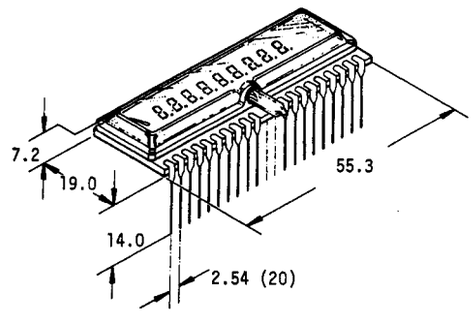

FIGURE 2

DIMENSIONS ARE IN MM

CHARACTERS	CHARACTER HEIGHT	CHARACTER SPACING	E_c	E_b	E_f	BRIGHTNESS	DOT MATRIX	PART NUMBER	FIGURE	CC	†† RC
9	.167	.150	34VP-P	34VP-P	3.3 V_{RMS}	90 fL		150-1110-00	2	K+	
16	.350	.590	35VP-P	35VP-P	4.8 V_{RMS}	100 fL	5 x 7 dot	150-1084-00	1	O+	3I

COST CODE

(CC COLUMN)

CODE	A	B	C	D	E	F	G	H	I	J	K	L	M	N	O
≈ VALUE with +	.75¢	2¢	3.75¢	6¢	10¢	18¢	35¢	60¢	$1	$2	$3.75	$6	$10	$18	$35+
≈ VALUE no suffix	.5¢	1.5¢	3¢	5¢	8¢	15¢	25¢	50¢	75¢	$1.50	$3	$5	$8	$15	$25
≈ VALUE with -	.2¢	1.25¢	2.5¢	4.25¢	7¢	13¢	22¢	40¢	65¢	$1.25	$2.50	$4.25	$7	$13	$22

NOTE: Costs may vary from order to order due to order quantities, vendor, etc.

◆ - NOT RECOMMENDED FOR NEW DESIGN.

CROSS REFERENCE INDEX

OPTOELECTRONIC DEVICES

PART NUMBER	DESCRIPTION	PAGE NO.	ST§§
150-0755-00	Lamp, L.E.D., Orange/Green	14-6	PP
150-1000-00	Lamp, L.E.D., Red	14-6	CR
150-1001-00	Lamp, L.E.D., Red	14-6	CR
150-1001-01	Lamp, L.E.D., Red	14-6	CR
150-1001-02	Lamp, L.E.D., Red	14-6	CR
150-1001-03	Lamp, L.E.D.		CR
150-1002-00	Display, L.E.D.		LS
150-1003-00	Display, L.E.D.		NP
150-1005-00	Display, Neon		DL
150-1006-00	Display, Neon		DL
150-1007-00	Display, Neon		DL
150-1008-00	Display Device		OB
150-1009-00	Readout Tube		DL
150-1010-00	Readout Tube		NP
150-1011-00	Display, L.E.D.		NP
150-1011-01	Display, L.E.D., Red	14-9	CR
150-1011-02	Display, L.E.D., Red	14-9	CR
150-1011-03	Display, L.E.D., Red	14-9	CR
150-1011-04	Display, L.E.D., Red	14-9	OT
150-1012-02	Display, L.E.D., Red		CR
150-1012-03	Display, L.E.D., Red	14-9	CR
150-1012-04	Display, L.E.D., Red	14-9	CR
150-1012-05	Display, L.E.D.		NP
150-1012-06	Display, L.E.D., Red	14-9	CR
150-1012-07	Display, L.E.D., Red	14-9	PP
150-1013-00	Display, L.E.D., Red	14-9	CR
150-1014-00	Lamp, L.E.D., Red	14-6	CR
150-1015-00	Digital Display, Neon	14-10	CS
150-1015-01	Digital Display, Neon	14-10	OB
150-1016-00	Digital Display, Neon	14-10	CS
150-1017-00	Lamp, L.E.D., Green	14-6	CR
150-1018-00	Display, L.E.D.		LS
150-1019-00	Display, L.E.D.		DL
150-1020-00	Lamp, L.E.D., built-in resistor for 5V, Red	14-6	CR
150-1021-00	Display, L.E.D.		NP
150-1022-00	Display, L.E.D., Orange	14-9	CR
150-1023-00	Display, L.E.D.,		LS
150-1024-00	Lamp, L.E.D.		LS
150-1025-00	Display, L.E.D.		LR
150-1026-00	Lamp, L.E.D., die form chip	14-6	CR
150-1029-00	Lamp, L.E.D., Green	14-6	CR
150-1029-01	Lamp, L.E.D., w/wires, conn.& Housing, Grn	14-6	CR
150-1031-00	Lamp, L.E.D., Red	14-6	CR
150-1031-01	Lamp, L.E.D., w/wires & connector		CR
150-1031-02	Lamp, L.E.D., w/wires & connector		CR
150-1031-02	Lamp, L.E.D., w/wires & connector		CR
150-1032-00	Lamp, L.E.D., Yellow	14-6	CR
150-1033-00	Lamp, L.E.D., Yellow	14-6	CR
150-1036-00	Lamp, L.E.D., Red	14-6	CR
150-1036-00	Lamp, L.E.D., Red	14-6	CR
150-1037-00	Display, L.E.D.,Orange	14-9	CR
150-1038-00	Display, L.E.D., Orange	14-9	CR
150-1039-00	Digital Display, Neon		NP
150-1039-01	Digital Display, Neon	14-10	OB
150-1040-00	Lamp, L.E.D., Red	14-6	CR
150-1040-01	Lamp, L.E.D., w/wires, conn.& holder, Red	14-6	CR
150-1043-00	Lamp, L.E.D., Red	14-6	CR
150-1045-00	Display, L.E.D., Red	14-9	CR
150-1045-01	Display, L.E.D., Red	14-9	CR
150-1046-00	Display, L.E.D., Red	14-9	CR
150-1046-01	Display, L.E.D., Red	14-9	CR
150-1047-00	Display, L.E.D., Red		LR
150-1048-00	Display, L.E.D., Orange	14-9	CR
150-1049-00	Lamp, L.E.D., Red/Green	14-6	CR
150-1050-00	Lamp, L.E.D., Red	14-6	LR
150-1051-00	Display, L.E.D., Red	14-9	PP
150-1052-00	Lamp, L.E.D., Red	14-6	CR
150-1053-00	Display, L.E.D., Orange	14-9	CR
150-1054-00	Lamp, L.E.D., Green	14-6	CR
150-1054-01	Lamp, L.E.D., w/connectors, Green	14-6	CR
150-1054-02	Lamp, L.E.D., w/connectors		CR
150-1055-00	Lamp, L.E.D., Green	14-6	CR
150-1059-00	Lamp, L.E.D., Red	14-6	CR
150-1060-00	Lamp, L.E.D., Red	14-9	PP
150-1061-00	Lamp, L.E.D., Red	14-6	CR
150-1063-00	Lamp, L.E.D., Yellow	14-6	CR
150-1064-00	Lamp, L.E.D., Yellow	14-6	CR
150-1065-00	Lamp, L.E.D., Yellow	14-6	PP
150-1066-00	Display, L.E.D., Orange	14-9	CR
150-1068-00	Lamp, L.E.D., Red	14-6	CR
150-1069-00	Display, L.E.D., Red	14-9	CR
150-1070-00	Lamp, L.E.D., Red	14-6	CR
150-1071-00	Lamp, L.E.D., Green	14-6	CR
150-1073-00	Lamp, L.E.D., Yellow	14-6	CR
150-1077-00	Lamp, L.E.D., Red	14-6	CR
150-1078-00	Lamp, L.E.D., Green	14-6	CR
150-1079-00	Infrared Emitter		DL
150-1083-00	Lamp, L.E.D.,	14-6	CR
150-1084-00	Vacuum, Fluorescent	14-10	CR
150-1085-00	Lamp, L.E.D.		CM
150-1086-00	Lamp, L.E.D.		CM
150-1089-00	Lamp, L.E.D., Green	14-6	OB
150-1090-00	Lamp, L.E.D., Red	14-6	CR
150-1091-00	Lamp, L.E.D., Red/Green	14-6	OB
150-1092-00	Infrared Emitter	14-3	PP
150-1093-00	Lamp, L.E.D., Red	14-6	CR
150-1093-01	Lamp, L.E.D., Red	14-6	CR
150-1093-02	Lamp, L.E.D., Red	14-6	PP
150-1095-00	Lamp, L.E.D., Red	14-6	OB
150-1096-00	Lamp, L.E.D., Yellow	14-6	OB
150-1097-00	Lamp, L.E.D., Green	14-6	PP
150-1101-00	Lamp, L.E.D., Yellow	14-6	CR
150-1104-00	Infrared Emitter	14-3	CR
150-1105-00	Lamp, L.E.D., Yellow	14-6	PP
150-1106-00	Lamp, L.E.D., Red	14-6	CR
150-1107-00	Lamp, L.E.D., Red	14-6	CR
150-1108-00	Lamp, L.E.D., Red	14-6	CM
150-1109-00	Lamp, L.E.D., Green	14-6	PP
150-1110-00	Digital Display	14-10	PP
150-1111-00	Lamp, L.E.D., Green	14-6	PP
150-1112-00	Lamp, L.E.D., Red	14-6	PP
150-1114-00	Display L.E.D., Red	14-9	MP
150-1115-00	Lamp, L.E.D., Red	14-6	PP
150-1116-00	Lamp, L.E.D., Green	14-6	PP
150-1117-00	Display, L.E.D., Red	14-9	PP
151-0252-00	Phototransistor	14-2	CR
151-0313-00	Phototransistor	14-2	CR
151-0313-01	Phototransistor, w/wires & connector	14-2	CR
151-0488-00	Phototransistor		DL
151-0628-00	Phototransistor	14-2	CR
151-0629-00	Phototransistor	14-2	CR
151-0648-00	Phototransistor	14-2	CR
152-0621-00	Infrared, Emitter	14-3	CR
152-0792-00	Photodiode	14-2	CR
153-0569-00	Phototransistor, Matched Pair	14-2	CS
156-0109-00	Optoisolator, L.E.D.	14-2	CR
156-0109-01	Optoisolator, L.E.D.	14-2	CR
156-0283-00	Optoisolator, L.E.D.	14-2	CR
156-0399-00	Optoisolator, L.E.D.	14-2	CR
156-0417-00	Optoisolator, L.E.D.	14-2	LR
156-0417-01	Optoisolator, L.E.D.	14-2	MP
156-0885-00	Optoisolator, L.E.D.	14-2	CR
156-0885-01	Optoisolator, L.E.D.	14-2	CR
156-0885-02	Optoisolator, L.E.D.	14-2	CR
156-0907-00	Optoisolator, L.E.D.	14-2	CR
156-1148-00	Optoisolator, L.E.D.	14-2	PP
156-1162-00	Optoisolator, L.E.D.	14-2	CR
156-1217-00	Optoisolator, L.E.D.	14-2	CR
156-1237-00	Optoisolator, L.E.D.	14-2	CR
156-1237-01	Optoisolator, L.E.D.	14-2	CR
156-1238-00	Optoisolator, L.E.D.	14-2	CR
156-1317-00	Optoisolator, L.E.D.	14-2	CR
156-1317-01	Optoisolator, L.E.D.	14-2	CR
156-1384-01	Optoisolator, L.E.D.	14-2	CS
156-1384-02	Optoisolator, L.E.D.	14-2	CR
156-1440-00	Optoisolator, L.E.D.	14-2	CR
156-1491-00	Optoisolator, L.E.D.		DL
156-1522-00	Optoisolator, L.E.D.	14-2	CR
156-1562-00	Optoisolator, L.E.D.	14-2	CR
156-1689-00	Optoisolator, L.E.D.	14-2	PP
307-0230-00	Photoresistor	14-2	CR

CROSS REFERENCE INDEX (CONT)

OPTOELECTRONIC DEVICES

PART NUMBER	DESCRIPTION	PAGE NO.	ST§§
307-0268-00	Photoresistor	14-2	CS
307-0338-00	Optoisolator	14-2	CS
307-0476-00	Optoisolator, L.E.D.	14-2	CR
307-0700-00	Optoisolator, L.E.D.	14-2	CR
307-1025-00	Optoisolator, L.E.D.	14-2	CR
352-0358-00	Holder, L.E.D.	14-8	CR
352-0360-00	Holder, L.E.D.	14-8	CR
352-0360-01	Holder, L.E.D.	14-8	CR
352-0361-00	Holder, L.E.D.	14-8	CR
352-0367-00	Holder, L.E.D.	14-8	CR
352-0419-00	Holder, L.E.D.	14-8	CR
352-0433-00	Holder, L.E.D.	14-8	CR
352-0433-01	Holder, L.E.D.	14-8	CR
352-0433-02	Holder, L.E.D.	14-8	CS
352-0433-03	Holder, L.E.D.	14-8	CS
352-0451-00	Holder, L.E.D.	14-8	CR
352-0477-00	Holder, L.E.D.	14-8	CR
352-0522-00	Holder, L.E.D.	14-8	CR
352-0522-01	Holder, L.E.D.	14-8	OT
352-0535-00	Holder, L.E.D.	14-8	CR
352-0699-00	Holder, L.E.D.	14-8	PP
352-0700-00	Holder, L.E.D.	14-8	PP
378-0175-00	Lens, Light	14-8	CR
378-0176-00	Lens, Light	14-8	CR
378-0177-00	Lens, Light	14-8	CR

§§ STATUS CODES

	CR	Current Production
§	EN	Engineering
	PP	Pre-Production
§	CS	Customer Service
§	NP	Non-Production
§	DL	Deleted
§	OB	Obsolete Instrument
	CM	Custom Mod Instrument
§	DS	Digital Systems
§	OT	Obsolescent Instrument
	MP	Modified Part
	LR	Last Supply Current
	LS	Last Supply Customer Service
	VN	Vendor
	TC	Telequipment Current Production
	IN	International
	SC	Sony/Tek Current Production

THE STATUS IN THIS CATALOG WAS CORRECT AT THE TIME IT WAS PUBLISHED, BUT IT IS SUBJECT TO CHANGE.

§ TO USE A PART WITH THIS STATUS ON A NEW INSTRUMENT REQUIRES THAT A NEW PURCHASED PART INITIATION FORM (PPIF) BE INITIATED.

(A GLOSSARY OF TERMS FOR THESE STATUS CODES CAN BE FOUND ON PAGE 0-44).

NOTES

DESOLDERING TOOLS-STATIC CHARGE

TOOL	CHARGE LEVEL RETAINED ON TOOL		
	Immediate charge	Charge after time	
Silverstat Soldapullt	0V	0V	After five minutes
Deluxe Soldapullt	3kV	300-400V	After five minutes
Standard Soldapullt	20kV	10kV	After five minutes
Bulb Solder Sucker	10kV	4kV	After five minutes
Solder-Wick	*2kV	0V	After one minute

*Charge was retained due to solder-wick's plastic reel

Some circuit board components are sensitive to static charge. Also, some desoldering tools create a static charge. In order to identify and preclude potential problems, we have tested the various desoldering tools available for use at Tek.

A circuit board was used, with components removed, to determine static levels. Each device was tested ten times. The desoldering tools were checked for immediate charge retention and for the charge held after five minutes.

Each of the tools except the Silverstat Soldapullt, left a static charge on the circuit board and retained a charge (see chart). The Silverstat Soldapullt, a model with a metallized surface, left no charge and also retained no charge. Therefore, it is the preferred tool. It has been assigned part number 003-0795-00.

For more information on these desoldering tools, contact Herb Zajac, ext. 4759.

LED spectrums

To get an apparent equal brightness in red and green LED's with the present state-of-the-art requires 2.5 to 3.5 times as much current in green LED's as red.

FOR MORE INFORMATION CONTACT LOUIS MAHN, EXT. 2549, 78-552.

graph is relative — for details refer to your specification

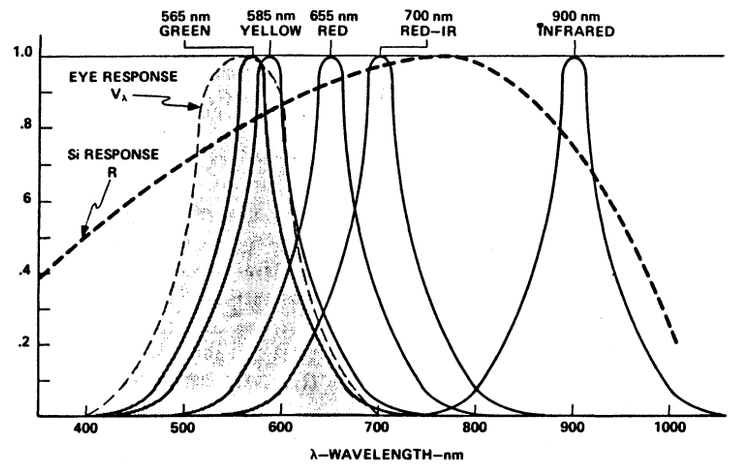

Reprinted from Hewlett Packard "Optoelectronic Applications Seminar Handbook"

LED's and Photometry

by George Smith, Litronix*

*Reprinted from Litronix AppNote 1

The observed spectrum of electromagnetic radiations, extends from a few Hz, to beyond 10^{24} Hz, covering some 80 octaves. The narrow channel from 430 THz to 750 THz would be entirely negligible, except for the fact that more information is communicated to human beings, in this channel, than is obtained from the rest of the spectrum. This radiation has a wavelength ranging from 400nm to 700nm, and is detectable by the sensory mechanisms of the human eye. Radiation observable by the human eye is commonly called light.

Measurements of the physical properties of light and light sources, can be described in the same terms as any other form of electromagnetic energy. Such measurements are commonly called Radiometric Measurements.

Measurements of the psychophysical attributes of the electromagnetic radiation we call light, are made in terms of units, other than these radiometric units. Those attributes which relate to the luminosity (sometimes called visibility) of light and light sources, are called photometric quantities, and the measurement of these aspects is the subject of Photometry.

The electronics engineer who is starting to apply light emitting diodes and other opto-electronic devices to perform useful tasks, will find the subject of photometry to be a confused mass of strange units, confusing names for photometric quantities, and general disagreement as to what the important requirements are for his application.

The photometric quantities are related to the corresponding radiometric quantities by the C.I.E. Standard Luminosity Function (Fig. 1), which we may colloquially refer to as the standard eyeball. We can think of the luminosity function, as the transfer function of a filter which approximates the behavior of the average human eye under good lighting conditions.

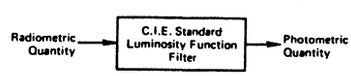

Figure 1. Relationship between radiometric units and photometric units.

The eye responds to the rate at which radiant energy falls on the retina, i.e., on the radiant flux density expressed as Watts/m^2. The corresponding photometric quantity is Lumens/m^2. The standard luminosity function is then, a plot of Lumens/Watt as a function of wavelength.

The function has a maximum value of 680 Lumens/Watt at 555nm and the ½ power points occur at 510nm and 610nm (Fig. 2).

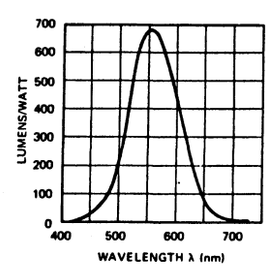

Figure 2. CIE standard photopic luminosity function.

The LUMEN is the unit of LUMINOUS FLUX and corresponds to the watt as the unit of radiant flux.

Thus the total luminous flux emitted by a light source in all directions is measured in lumens, and can be traced back to the power consumed by the source to obtain an efficiency number.

Since it is generally not practical to collect all the flux from a light source, and direct it in some desired direction, it is desirable to know how the flux is distributed spatially about the source. If we treat the source as a point (far field measurement), we can divide the space around the source into elements of solid angle (dω), and inquire as to the luminous flux (dF) contained in each element of solid angle ($\frac{dF}{d\omega}$). The resulting quantity is Lumens/Steradian and is called LUMINOUS INTENSITY (I), (Fig. 3). The unit of Luminous intensity is called the CANDELA, sometimes loosely called the candle, or candle power.

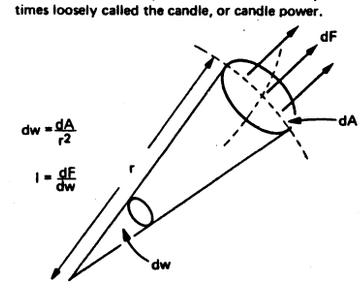

Figure 3. Solid angles and luminous intensity.

Since the space surrounding a point contains 4 π steradians, it is apparent that an isotropic radiator of one candela intensity, emits a total luminous flux of 4 π Lumens.

No real light source is isotropic, so it is quite common to show a plot of Luminous intensity versus angle off the axis (Fig. 4). If the source has no axis of symmetry, a more complex diagram is required.

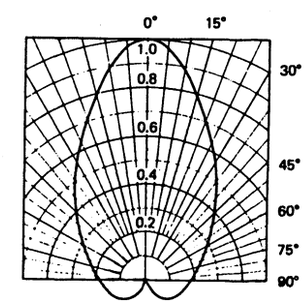

Figure 4. Spatial distribution pattern.

For an extended radiating surface, (such as an LED chip), each element of area contributes to the luminous intensity of the source, in any given direction. The luminous intensity contribution in the given direction, divided by the projected area of the surface element in that direction, is called the LUMINANCE (B) of the source (in that direction), (Fig. 5). The quantity is sometimes called photometric brightness, or simply brightness. The use of the term brightness on its own, should be discouraged, as this involves various subjective properties such as texture, color, sparkle, apparent size, etc. that have psychological implications.

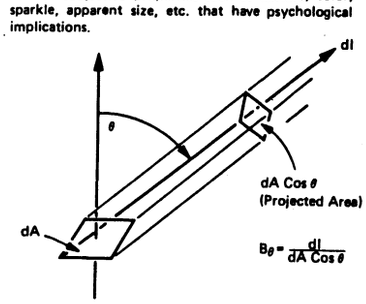

Figure 5. Definition of luminance.

The fundamental quantitative standard of the photometric system of units is the standard of luminance.

The luminance of a black body radiator at the temperature of freezing platinum (2043.8°K) is 60 candela per square centimeter. [A blackbody radiator is a perfect absorber of all electromagnetic energy incident on it. In thermal equilibrium at a given temperature, it emits radiation, spectrally distributed according to Plancks Formula

$$(W_\lambda = \frac{c_1 \lambda^{-5}}{\exp(\frac{c_2}{\lambda}) - 1})]$$

The units of Luminance in present use are an engineering nightmare.

1 candela/cm^2 is called a *Stilb*
1/π candela/cm^2 is called a *Lambert*
1 candela/m^2 is called a *Nit*
1/π candela/m^2 is called an *Apostilb*
1/π candela/ft^2 is called a *foot-Lambert*

The foot Lambert is the most commonly used unit in this country.

Of particular interest is a source whose angular distribution pattern is a circle (Fig. 6). For such a source we have $I_\theta = I_0 \cos\theta$, the luminance of such a source in a given direction θ, is then given by

$$B_\theta = \frac{d\, I_\theta}{d\, A \cos\theta} = \frac{d\, I_0 \cos\theta}{d\, A \cos\theta} = \frac{d\, I_0}{dA}$$

The luminance is seen to be the same in all directions. Such a source is called a LAMBERTIAN SOURCE. It can be shown that a perfectly diffusing surface behaves in this fashion. The formula governing a diffusing surface $I_\theta = I_0 \cos\theta$ is called Lambert's Cosine Law.

It can be shown that a flat LED chip is a very good approximation to a Lambertian Source.

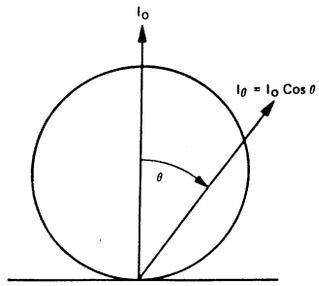

Figure 6. Lambertian radiation pattern.

If we now take a surface element (dA) and determine the intensity contribution in each direction we can determine the total flux (dF) emitted by the surface element. The resultant ratio ($\frac{dF}{dA}$) Lumens/m^2 is called the LUMINOUS EMITTANCE (L). For a flat surface we may calculate L from

$$L = 2\pi \int_0^{\pi/2} B_{(\theta)}\, S_{IN}\, \theta \cos\theta \, d\theta$$

The corresponding radiant emittance in watts/m^2 is of considerable interest for GaAs infrared LED's where total output power is an important parameter.

The total luminous flux emitted by a light source can then be calculated from $F_{total} = \int L dA$.

These photometric quantities are sufficient to describe the properties of light sources such as light emitting diodes.

When light falls on a receiving surface, it is either partially reflected in the case of a purely passive surface, or partly converted into some other form of energy by what we may describe as an active surface (such as a phototransistor or photomultiplier cathode). In either case we are interested in how much flux falls on each element of the surface; Lumens/m^2 in the case of a passive surface which we wish to illuminate, or the eye; and Watts/m^2 in the case of other active surfaces. The quantity Lumens/m^2 in this case is called the ILLUMINANCE sometimes loosely referred to as the illumination. The unit of illuminance is the LUX also referred to as the metercandle.

Another commonly used unit of illuminance, in this country is the FOOT CANDLE, equal to one lumen per square foot. One lumen per square cm is called a PHOT.

Many of these photometric quantities and units are in common use in the field of illumination engineering, with the English units being most common in this country. It should be apparent to the reader that a mixed system of units is involved in common usage.

APPLICATION TO LIGHT EMITTING DIODES

The above description of photometric quantities should indicate to the reader that there are many ways in which the photometric properties of LED's can be stated. There is no general agreement among LED makers and users, as to the best way to specify LED performance, and this has lead to much confusion and misunderstanding.

Many factors must be taken into account when evaluating LED specifications for a particular application, and electronic engineers will need to develop a knowledge of these factors to put LED's to effective use in new designs.

Presently available light emitting diodes are made from the so-called III-V compound semiconductors, with Gallium Arsenide Phosphide and Gallium Phosphide being the major materials. Gallium Aluminum Arsenide is also used but is less common. Gallium Arsenide is commonly included in this group, but it should be remembered that GaAs emits only infra-red radiation around 900nm, which is not visible to the eye, and is thus not properly called light. All specifications of GaAs emitters must be in radiametric units.

GaP emits green light between 520 and 570nm peaking 550nm very close to the peak eye sensitivity. It also can emit red light between 630 and 790nm peaking at 690nm.

$GaAs_{(1-x)}P_x$ emits light over a broad orange red range depending on the percentage of GaP in the material (x). For x in the 0.4 region, red light between 640 and 700nm peaking at 660nm, is obtained. For x = 0.5, amber light peaking around 610nm is obtained.

$Ga_{(1-x)}Al_xA_s$ as presently available, emits red light between 650 and 700nm peaking at 670nm.

The efficiency of these materials is very dependent on the emitted wavelength, with drastic fall off in efficiency as the wavelength gets shorter. Fortunately the standard eyeball filter, favors the shorter wavelength (down to 555nm) and gives some measure of compensation. Some typical efficiencies reported by device makers, and the resulting overall luminous efficiency (Lumens/electrical watt) are as follows:

GaP.red .72% @ 20Lum/Watt =
.14 Lum/Watt overall (Opcoa)
$GaAs_{.6}P_{.4}$red .3% @ 50Lum/Watt =
.15 Lum/Watt overall (Litronix)
GaAlAs red .06% @ 40Lum/Watt =
.024 Lum/Watt overall (Mitsubishi)
GaP green .006% @ 675Lum/Watt =
.04 Lum/Watt overall (Monsanto)
$GaAs_{.5}P_{.5}$amber .0044% @ 340Lum/Watt –
.015 Lum/Watt overall (Monsanto)

For simple status indicator applications, front panel lamps and similar applications, several factors must be taken into account:

(1) Color. Generally the designer has Henry Ford's color choice; various similar shades of red. Amber and green are available in small quantity, because of availability of suitable raw material.

(2) Apparent source size. Various combinations of chip size and optical systems are available so that apparent source sizes from about 5 mils to about 300 mils diameter are available as standard products. Other things being equal, a larger source size is more visible.

(3) Angular distribution. GaAsP diode chips are nearly Lambertian, but GaP are nearly isotropic. With suitable optical design, the angular distribution pattern can be changed from very broad to quite narrow. By placing the chip at the focus of the lens system a narrow high intensity beam is obtained. The off axis visibility is drastically reduced. By using diffusing lens materials, a large area source with good off axis visibility is obtained. In this case the luminance is reduced.

(4) Luminous intensity. This will govern the visibility under optimum background contrast conditions, when viewed at normal distances. 1 millicandela is typical for red lamps of either GaAsP or GaP at normal operating conditions.

(5) Luminance. When it is not possible to provide a dark contrasting background, or when the source is viewed at very close distances, the luminance becomes important. Values from 100 ft-L to 5000 ft-L are typical.

These factors are all related to the design of the device and the user should understand the trade offs. High luminance values in excess of 10,000 ft-L are easily obtained by running very high current densities in the LED chip, but this can lead to shortened life if carried too far.

For a given drive current the luminous intensity of two different chips will be similar, while the luminance will be inversely proportional to the active area of the chip.

If the designer can use filter screens or circularly polarizing filters in front of the light source, excellent protection from background illumination can be obtained. In this case a diffusive lens giving a large apparent source with lower luminance, is more visible than a high luminance point source.

When a LED is used with an optical system to activate a remote sensor such as a cadmium sulphide or cadmium selenide cell (red light), or a GaAs IR emitter is used with a silicon photo detector, the performance requirements are somewhat different. It can be shown that for a given optical arrangement the irradiance of the detector determines the detected signal and this is proportional to the radiance of the source, which is comparable to the luminance (brightness) of the source. The intensity of the source will not be a factor unless the detector active area is larger than the incident beam.

When average power consumption must be minimized but good visibility is required, or detection at a considerable distance is required, pulsed operation can be used. With GaAs and GaAsP emitters using low duty cycle short pulses, very high peak intensity levels can be reached permitting communication over considerable distances. This technique is not useful with GaP diodes since they do not exhibit a linear relationship between optical output and instantaneous forward current, becoming saturated at moderate current levels. GaP also has a 50% higher rate of fall off in light output with temperature increase, than GaAsP which further inhibits high power applications.

The use of LED's to give a "Heads Up" projected display, such as for an automobile speedometer readout, or aircraft cockpit application, places severe requirements on the display luminance. For easy visibility, the projected image must be sufficiently contrasted with the ambient illumination. This requires very high luminance values for the LED's together with the use of photochromic windshields and probably polarizing screens.

The foregoing is a necessarily simplified, description of a very complex subject. The reader should avail himself of the standard textbook literature on these subjects.

References:

R. Kingslake, *Applied Optics & Optical Engineering*
Committee on Colorimetry of the O.S.A., *The Science of Color.*
Warren J. Smith, *Modern Optical Engineering.*

FOR MORE INFORMATION, CONTACT LOUIS MAHN, EXT. 2549, DEL. STA. 78-552

LAMPS

15

SECTION 15

TABLE OF CONTENTS

	PAGE(S)
NOTES	15-2
LISTINGS	
GLOW	15-3
INDANDESCENT	15-4 & 15-5
CARTRIDGE LAMP & LIGHT, INDICATOR	15-6 & 15-7
HOLDERS	15-8 THRU 15-11
LENS	15-12 & 15-13
CROSS REFERENCE INDEX	15-14 & 15-15
APPLICATION NOTES	15-16 & 15-17
NEON'S OSCILLATE	15-16
EXTEND INCANDESCENT LIFE	15-17

COST CODE

(CC COLUMN)

CODE	A	B	C	D	E	F	G	H	I	J	K	L	M	N	O
≈ VALUE with +	.75¢	2¢	3.75¢	6¢	10¢	18¢	35¢	60¢	$1	$2	$3.75	$6	$10	$18	$35+
≈ VALUE no suffix	.5¢	1.5¢	3¢	5¢	8¢	15¢	25¢	50¢	75¢	$1.50	$3	$5	$8	$15	$25
≈ VALUE with -	.2¢	1.25¢	2.5¢	4.25¢	7¢	13¢	22¢	40¢	65¢	$1.25	$2.50	$4.25	$7	$13	$22

NOTE: Costs may vary from order to order due to order quantities, vendor, etc.

CATALOG WRITER: NORMA PETERSON, EXT. 2577.

NOTES

15

§§ STATUS CODES

	CR	Current Production
§	EN	Engineering
	PP	Pre-Production
§	CS	Customer Service
§	NP	Non-Production
§	DL	Deleted
§	OB	Obsolete Instrument
	CM	Custom Mod Instrument
§	DS	Digital Systems
§	OT	Obsolescent Instrument
	MP	Modified Part
	LR	Last Supply Current
	LS	Last Supply Customer Service
	VN	Vendor
	TC	Telequipment Current Production
	IN	International
	SC	Sony/Tek Current Production

THE STATUS IN THIS CATALOG WAS CORRECT AT THE TIME IT WAS PUBLISHED, BUT IT IS SUBJECT TO CHANGE.

§ TO USE A PART WITH THIS STATUS ON A NEW INSTRUMENT REQUIRES THAT A NEW PURCHASED PART INITIATION FORM (PPIF) BE INITIATED.

(A GLOSSARY OF TERMS FOR THESE STATUS CODES CAN BE FOUND ON PAGE 0-44).

COST CODE

(CC COLUMN)

CODE	A	B	C	D	E	F	G	H	I	J	K	L	M	N	O
≈ VALUE with +	.75¢	2¢	3.75¢	6¢	10¢	18¢	35¢	60¢	$1	$2	$3.75	$6	$10	$18	$35+
≈ VALUE no suffix	.5¢	1.5¢	3¢	5¢	8¢	15¢	25¢	50¢	75¢	$1.50	$3	$5	$8	$15	$25
≈ VALUE with -	.2¢	1.25¢	2.5¢	4.25¢	7¢	13¢	22¢	40¢	65¢	$1.25	$2.50	$4.25	$7	$13	$22

NOTE: Costs may vary from order to order due to order quantities, vendor, etc.

†† RELIABILITY CODES

USAGE/YR	CODE
≥10	1
≥100	2
≥1 000	3
≥10 000	4
≥100 000	5
≥1 000 000	6
≥10 000 000	7

FAILURE FREQ	CODE		%/YR (median)
1/100 000	A	=	.001
1/50 000	B	=	.002
1/20 000	C	=	.006
1/10 000	D	=	.01
1/5 000	E	=	.02
1/2 000	F	=	.05
1/1 000	G	=	.1
1/500	H	=	.2
1/200	I	=	.5
1/100	J	=	1.0+

For further explanation of this code, see page 0-25.

LAMPS

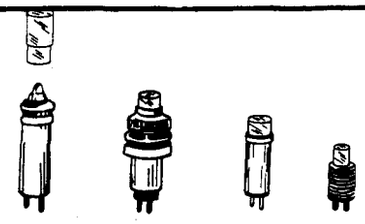

LAMP, CARTRIDGE: An item consisting of an unbased lamp, either incandescent or glow, mounted on a sleeve. The unbased lamp is not normally removable. It has projecting terminals. It must include or provide for the use of a lens as an integral part of it. Representative types shown at left.

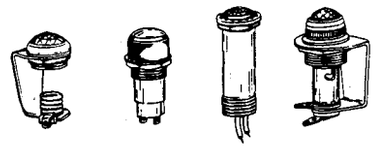

LIGHT, INDICATOR: An item designed to convey information of a specific nature concerning the circuit in which inserted. Must include or provide for the use of a lens as an integral part of it. The item must have accommodations for one or more LAMP, (glow or incandescent), which may or may not be included but which is replaceable. Representative types shown at left.

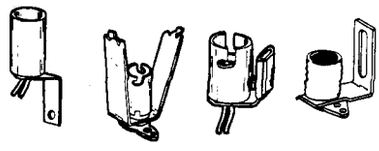

LAMPHOLDER: An item primarily designed to electrically and mechanically accomodate a LAMP, (glow or incandescent). May include an integral switch, dropping resistor, etc., *provided these items control the lamp only.* Does not include a shade, lens, reflector, or other item for modifying illumination. May or may not include lamp.

PREFERENTIAL USE OF LENS COLORS: The only standard governing the use of lens colors at TEKTRONIX is for POWER ON applications as follows: GREEN with incandescent lamps, and WHITE with glow (neon) lamps.

COST CODE

(CC COLUMN)

CODE	≈ VALUE with -	≈ VALUE no suffix	≈ VALUE with +
A	.2¢	.5¢	.75¢
B	1.25¢	1.5¢	2¢
C	2.5¢	3¢	3.75¢
D	4.25¢	5¢	6¢
E	7¢	8¢	10¢
F	13¢	15¢	18¢
G	22¢	25¢	35¢
H	40¢	50¢	60¢
I	65¢	75¢	$1
J	$1.25	$1.50	$2
K	$2.50	$3	$3.75
L	$4.25	$5	$6
M	$7	$8	$10
N	$13	$15	$18
O	$22	$25	$35+

NOTE: Costs may vary from order to order due to order quantities, vendor, etc.

GLOW

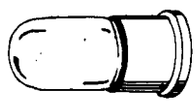

FIGURE 1

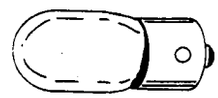

FIGURE 2

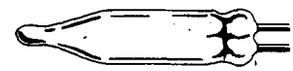

FIGURE 3

VOLTS DC FIRING	VOLTS DC MAINTAINING	CUR mA	TYPE NO	LAMP TYPE FIG	LAMP TYPE DIA MAX	LAMP TYPE LG. MAX	LIFE (HRS)	SPECIAL CHARACTERISTICS	PART NUMBER	CC	†† RC
125 MAX		1.5	AIB-3	3	.244	.500	25k	High brt, dk eft reduced	150-0111-00	E	4E
90 MAX		.3	JH005/3011JA A13-3	3	.244	.520	25k	Dark effect reduced	150-0035-00	F-	5A
125 MAX	CM A2G	.3	AIG	1	.250	.625	25k		150-0085-00	I-	4F
90 MAX		.3	BIA	2	.480	1.188	15k		150-0003-00	G	
90 MAX	GI NE 2T(T2)	.5	NE-2T(T2)	3	.250	1.000	25k		150-0002-00	E	5C
60-90	46-78	.3	NE51/B1A	3	.244	.750	25k		150-0030-00	D	5A
135 MAX	GI NE2H	1.9	NE2-H C2A-2	3	.244	.750	25k	Dark effect reduced	150-0050-00	E+	4D
60-80	52-62		2AA-T	3			7.5k		150-0084-00	H-	
62-72	50-60	.3	5AB-BT	3	.250	1.063	6k	Dark effect reduced	150-0055-00	H	
60-90	59AVG	.3	NE23	3	.250	1.000	6k	Dark effect reduced	150-0027-00	G+	
68-76	50-60	.4	5AG-A	3	.275	1.000	2k	Dark effect reduced	150-0021-00	J-	
70-78	55-61	.5	ST2-27-S	3	.244	.844	2.5k		150-0037-00	H	
70-80	52-63	5.	5AH-B	3	.250	.938	5k	Dark effect reduced 1.5mA min	150-0067-00	I	
55-90	57 AVG	1.5	5AJ	3	.250	.938	2k	Dark effect reduced	150-0053-00	I	
135 MAX		1.9	C2A-T	3	.244	.750	25k	LKG less than 1nA at 10VDC from 150-0050-00	150-0173-00		
60-100	61 AVG	1.5	5AH	3	.250	.938	5k	Dark effect reduced	150-0051-00	E+	

LAMPS (CONT)

INCANDESCENT

DESIGN VOLTAGE	CURRENT (A)	MSCP	LIFE (HRS)	LAMP TYPE NUMBER	LAMP TYPE FIG	OTHER	PART NUMBER	CC	++ RC
2.25	.25	NA	5k	222	13	Lens-end	150-0116-00	G	
2.46	.50	.90	15k	245	15		150-0117-00	G	2G
5.	.06	.05	25k	683	3	Aged and selected	150-0048-01	G+	5D
5.	.06	.05	25k	685	4		150-0045-00	I-	4G
5.	.06	.05	25k	2200DX	9		150-0130-00*	F+	5F
5.	.06	.05	25k	6833AS15	2	Aged and selected	150-0093-01	H	4F
5.	.06	.05	100k	6835	1		150-0049-00	I+	
5.	.06	.053	25k	6832AS15	5	Aged and selected	150-0102-01	H	3E
5.	.06		25k	683R	3	Red coated glass env.	150-0054-00	H+	
5.	.06			7361	10	Lens-end	150-0194-00	G+	
5.	.06	.15	5k	CM7-3149	10		150-0139-00	G	3I
5.	.075	.09	25k	7132AS15	5	Aged and selected	150-0106-01	H	
5.	.08	.15	3k	8666AS15	2	Aged and selected	150-0098-01	I+	
5.	.115	.15	20k	515DX	6		150-0100-00	F	
5.	.115	.15	20k	7335	7		150-0125-00	G+	
5.	.115	.147	50k	7153AS15	2	Aged and selected	150-0057-01	H+	5D
5.	.115	.147	50k	7153AS15	2	w/352-0174-01, max lg .257	150-0057-02	I+	
5.	.115	.147	50k	7153AS15	2	w/352-0174-01, max lg .227	150-0057-03	I+	4E
5.	.115	.147	40k				150-0120-00	J+	
5.	.115		40k	OL-815BLX	10		150-0195-00	I+	
6.	.2	.6	1k	1784DX	9		150-0128-00	F+	
6.	.2	.34	1k	328	7		150-0004-00	F	
6.	.2	.6	1k	CM7-7328	10		150-0122-00	G	
6.3	.15	.35	10k	12	16		150-0018-00	G+	
6.3	.15	.52	3k	47	14		150-0001-00	F-	4E
6.3	.2	.55	5k	2112DX	9		150-0129-00	F+	4D
6.3	.2	.55	5k	398	8		150-0047-00	G	4F
6.3	.2	.55	5k	349	7		150-0029-00	G-	4C
6.3	.2	.4	50k	378	11		150-0189-00	J	
6.3	.2	.4	20k	7381	10		150-0097-00	G+	
6.3	.2	.4	20k	7381	10	Frosted with cut leads	150-0097-01	H-	
6.3	.25	.9	3k	44	14		150-0031-00	G+	3H
10.	.014	.006	50k	21490	9		150-0075-00	F+	3F
10.	.04	.08	5k	367	7		150-0108-00	H	
10.	.04	.08	5k	CM2107	9		150-0046-00	F-	4F
12.	.06	.15	16k	CM7219	5		150-0180-00	H	
14.	.08	.3	50k	CM8362	11		150-0181-00	J+	
14.	.08	.3	50k	2182D	9		150-0077-01*	F	
14.	.08	.3	15k	382	7		150-0078-00	G	
14.	.08	.3	50k	386	8		150-0059-00	G+	4E
14.	.1	.5	10k	CM8918	7		150-0137-00	H	
14.	.75	2.0	3k	CM1893	14		150-0208-00	G	
18.	.026	.15	10k	CM7220	3		150-0109-00	I-	4G
28.	.04	.3	7k	2187D	9		150-0088-00	F	3F
120.	.025	.36	5k	120PS	12		150-0131-00*	G+	4F

* Safety Controlled.

COST CODE

(CC COLUMN)

CODE	A	B	C	D	E	F	G	H	I	J	K	L	M	N	O
≈ VALUE with +	.75¢	2¢	3.75¢	6¢	10¢	18¢	35¢	60¢	$1	$2	$3.75	$6	$10	$18	$35+
≈ VALUE no suffix	.5¢	1.5¢	3¢	5¢	8¢	15¢	25¢	50¢	75¢	$1.50	$3	$5	$8	$15	$25
≈ VALUE with -	.2¢	1.25¢	2.5¢	4.25¢	7¢	13¢	22¢	40¢	65¢	$1.25	$2.50	$4.25	$7	$13	$22

NOTE: Costs may vary from order to order due to order quantities, vendor, etc.

++ FOR RELIABILITY CODE, SEE PAGE 15-2.

LAMPS (CONT)

INCANDESCENT

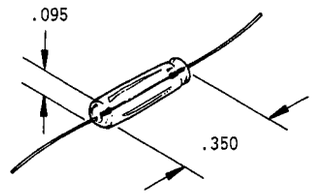

FIG 1 T-3/4
Wire Terminals

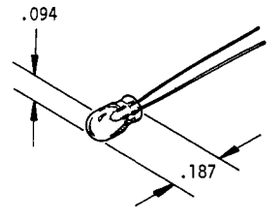

FIG 2 T-3/4
Wire Terminals

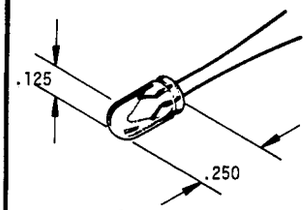

FIG 3 T-1
Wire Terminals

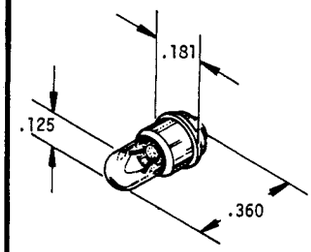

FIG 4 T-1
Sub-Midget Flanged

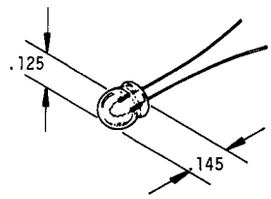

FIG 5 T-1
Wire Terminals (Low Profile)

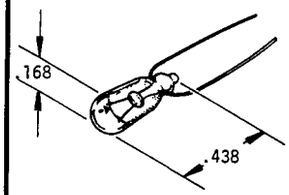

FIG 6 T-1 1/4
Wire Terminals

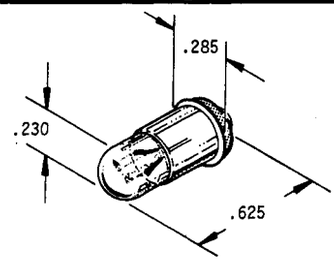

FIG 7 T-1 3/4
Midget Flanged

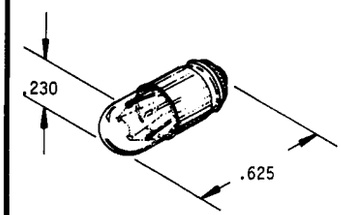

FIG 8 T-1 3/4
Midget Grooved

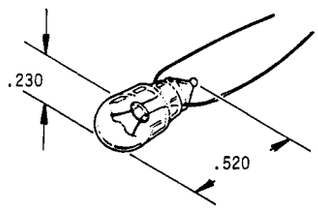

FIG 9 T-1 3/4
Wire Terminals

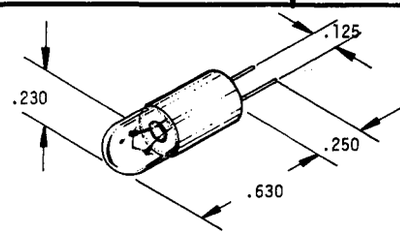

FIG 10 T-1 3/4
Bi-PIN

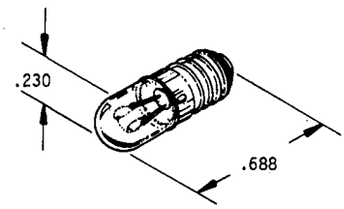

FIG 11 T-1 3/4
Midget Screw

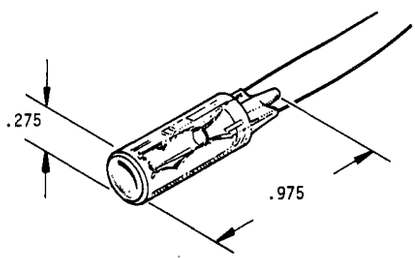

FIG 12 T-2
Wire Terminals

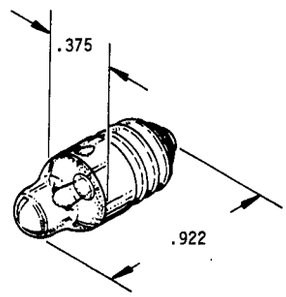

FIG 13 TL-3
Miniature Screw

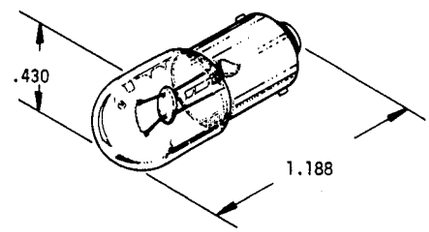

FIG 14 T-3 1/4
Miniature Bayonet

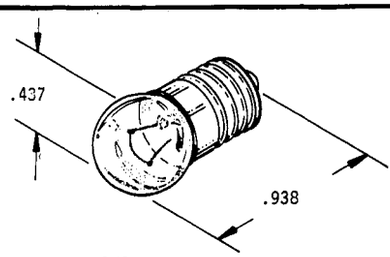

FIG 15 G-3 1/2
Miniature Screw

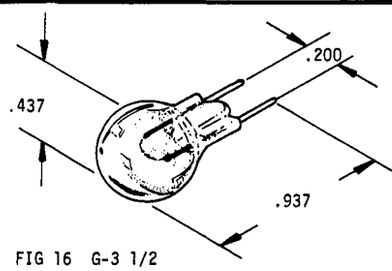

FIG 16 G-3 1/2
Miniature 2-PIN

LAMPS (CONT)

CARTRIDGE LIGHT INDICATOR

LENS COLOR	VOLTS	CURRENT	LAMP DATA: LAMP TYPE	LAMP DATA: ACCEPTS LAMP TYPE	MTG. DETAIL	FIG NO. PAGE 15-7	LIFE (HRS)	SPECIAL FEATURE	UL RECOG-NIZED	PART NUMBER	CC	†† RC
Yellow	5.	.06A	Incandescent	Not replaceable	A5	11	50k	1.25-inch wire leads		150-0121-01	I	
Yellow	14.	.023A	Incandescent	Not replaceable	A5	11	200k	w/connector		150-0123-10		
Yellow	14.	.023A	Incandescent	Not replaceable	A5	11	200k	6-inch wire leads		150-0123-01	J-	
Yellow	14.	.08A	Incandescent	Not replaceable		3†	15k	Cartridge type (plug-in)	X	150-0089-00	I+	
Yellow	14.	.08A	Incandescent	Not replaceable	A13	12	15k	8-inch wire leads		150-0133-01	H	
Amber	5.	.06A	Incandescent	Not replaceable	A5	11	50k	4-inch wire leads		150-0191-00	I	
Amber	28.	.04A	Incandescent	Not replaceable		3†		Cartridge type (plug-in)		150-0032-00	J-	
Amber	115.		Neon	Not replaceable		10		With 30k resistor, 4.5-inch leads	X	150-0175-00	I	
Amber	115.		Neon	Not replaceable		10		With (2) 131-1215-00 connectors	X	150-0175-01	J+	
Amber	135.	1.9mA	C2A neon	Not replaceable	A18	8		Cartridge type bushing mount		150-0041-00	K-	
Blue	10.	.04A	Incandescent	Not replaceable		2				150-0104-00	J-	
Blue	14.	.023A	Incandescent	Not replaceable	A5	11	200k	8-inch wire leads		150-0123-04	K+	
Blue	28.	.04A	Incandescent	Not replaceable		3†	7k	Cartridge type (plug-in)		150-0091-00	I+	
White	5.	.06A	680 Incand.	Not replaceable	A72	1		Cartridge type bushing mount		150-0038-00	K+	
White	5.	.06A	Incandescent	Not replaceable	A5	11	50k	1.25-inch wire leads		150-0121-00	I	
White	10.	.027A	Incandescent	Not replaceable	A5	11	10k	4-inch wire leads		150-0193-00	J-	
White	10.	.027A	Incandescent	Not replaceable	A5	11	10k	4-inch wire leads w/connectors		150-0193-01		
White	10.	.04A	Incandescent	Not replaceable		3†	6k	Cartridge type (plug-in)		150-0052-00	J+	
White	14.	.023A	Incandescent	Not replaceable	A5	11	200k	6-inch wire leads		150-0123-00	J-	
White	14.	.023A	Incandescent	Not replaceable	A5	11	200k	Wire leads		150-0123-05	J+	3I
White	14.	.023A	Incandescent	Not replaceable	A5	11	200k	Wire leads with connectors		150-0123-06		
White	14.	.023A	Incandescent	Not replaceable	A5	11	200k	6.75/2.75 long leads		150-0123-11		
White	100.	.7mA	A9A neon	Not replaceable	A18	8		Cartridge type bushing mount		150-0019-00	J	
White			No lamp	T-1 midg flg base	A72	5	200k	Isolated case		136-0382-00	K-	
Clear	28.	.04A	Incandescent	Not replaceable		3†	25k	Cartridge type (plug-in)		150-0184-00	J+	
Clear	135.	1.9mA	C2A neon	Not replaceable	A18	8		Cartridge type bushing mount		150-0040-00	J+	2I
Clear			No lamp	T-3 1/4 min bay	A30	7		**Lens frosted; 56k resistance		136-0028-00		
Clear			No lamp		A18	14		Cartridge type		136-0164-00	J-	
Green	5.	.06A	Incandescent	Not replaceable	A5	11	50k	w/connectors		150-0121-06		
Green	5.	.06A	Incandescent	Not replaceable	A5	11	50k	4-inch wire leads ground		150-0121-02	I-	
Green	5.	.06A	Incandescent	Not replaceable	A5	11	50k	w/connectors		150-0121-09		
Green	5.	.06A	Incandescent	Not replaceable	A5	11		4.75 long leads		150-0121-08		
Green	5.	.06A	Incandescent	Not replaceable	A5	11		4.125 long leads		150-0121-07	J+	
Green	5.	.06A	Incandescent	Not replaceable	A5	11		w/connector		150-0121-05	J+	
Green	5.	.06A	Incandescent	Not replaceable	A5	11		w/connector		150-0121-04	K+	
Green	5.	.06A	Incandescent	Not replaceable	A5	11		4. long leads		150-0121-10		
Green	6.	.2A	328 Incand.	T-1 3/4 midg flg	A25	6		Lens frosted, ground case		136-0031-01		
Green	6.3	.2A	Incandescent	Not replaceable		3†	50k	Cartridge type (plug-in)		150-0087-00	I+	
Green	6.3	.2A	Incandescent	Not replaceable	A13	13	20k	2 & 4-inch wire leads		150-0134-00	H	3H
Green	10.	.04A	Incandescent	Not replaceable		2†	6k	Cartridge type (plug-in)		150-0065-00	I+	3G
Green	10.	.07A	Incandescent	Not replaceable	A13	13	50k	2-inch wire leads		150-0170-00	H	3J
Green	14.	.023A	Incandescent	Not replaceable	A5	11	200k	w/lens		150-0123-09	K-	
Green	14.	.023A	Incandescent	Not replaceable	A5		200k	8-inch wire leads		150-0123-03	J-	
Green	28.	.04A	Incandescent	Not replaceable		3†		Cartridge type (plug-in)		150-0033-00	I+	
Green	115.		Neon	Not replaceable	A25	10		With internal resistor	X	150-0174-00	J	
Green	115.		Neon	Not replaceable	A25	10		With (2) 131-1215-00 connectors	X	150-0174-01	K-	
Green			No lamp	T-1 midg flg base	A10	4		Grounded case		136-0223-00	J+	3F
Green			No lamp	T-1 midg flg base	A72	5		Isolated case		136-0279-00	K-	
Green			No lamp	T-3 1/4 min bay	A30	7		**Lens frosted on back		136-0027-00	J+	
Green			No lamp	T-1 3/4 midg flg	A25	6		Dimmer lens; ground case		136-0244-00	K	
Red	5.	.06A	No lamp			16	200k	.5-inch wire leads		150-0197-00	I+	
Red	6.	.06A	Incandescent	T-1 3/4 midg flg	A25	6		Lens frosted, ground case		136-0031-00		
Red	14.	.023A	Incandescent	Not replaceable	A5	11	200k	8-inch wire leads		150-0123-02	J-	
Red	14.	.023A	Incandescent	Not replaceable	A5	11	200k	4.5 long leads		150-0123-12		
Red	14.	.023A	Incandescent	Not replaceable	A5	11	200k	w/connectors		150-0123-07	K-	
Red	14.	.023A	Incandescent	Not replaceable	A5	11	200k	w/connectors		150-0123-08	K-	
Red	14.	.08A	Incandescent	Not replaceable	A13	12	15k	2-inch wire leads		150-0133-00	H	
Red	14.	.08A	Incandescent	Not replaceable		3	50k	Cartridge type (plug-in)	X	150-0090-00	I+	3G
Red	28.	.04A	Incandescent	Not replaceable		3†		Cartridge type (plug-in)		150-0034-00	J-	
No lens	35.	1. A	No lamp	Miniature bayonet	A30	9		**Lenses listed below		136-0025-00	I	

** USE LENS 378-0513-00 (GREEN), 378-0529-00 (RED), 378-0530-00 (YELLOW), 378-0531-00 (GREEN) ON PART NUMBER 136-0025-00. ALSO INTERCHANGEABLE WITH LENSES FURNISHED ON PART NUMBER 136-0027-00 AND 136-0028-00.

† FIG. 2 AND 3 MOUNT IN PART NUMBER 136-0164-00 (FIG. 16) PAGE 15-7 ALSO 152-0141-00 & 352-0173-00, LAMPHOLDER SECTION, PAGE 15-10.

SWITCHES WITH LIGHTEN PUSHBUTTONS:

260-0717-00	Transparent green lens
260-0518-00	Transparent red lens
260-0581-00	Transparent red lens
260-0864-00	Translucent white lens
260-0779-00	Transparent colorless lens

LAMPS (CONT)

CARTRIDGE LIGHT INDICATOR

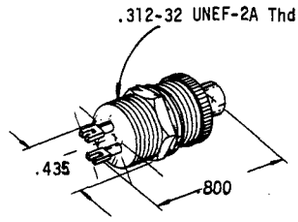

FIG 1

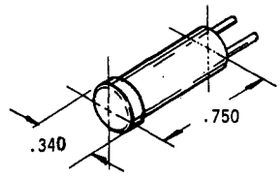

LEAD SPACING .160
FIG 2

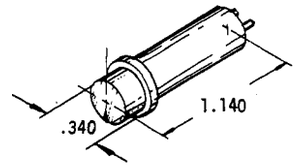

LEAD SPACING .160
FIG 3

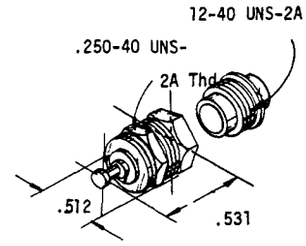

FIG 4

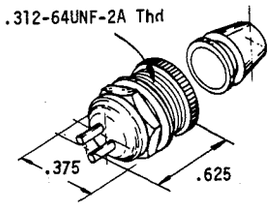

FIG 5

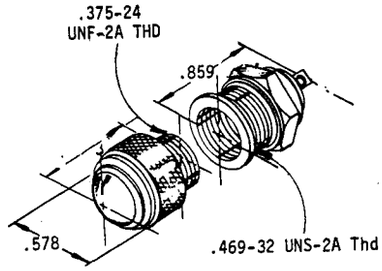

FIG 6

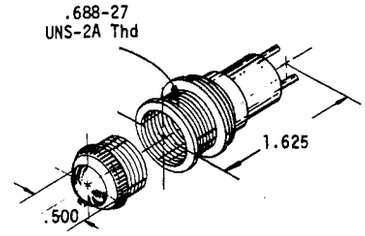

FIG 7

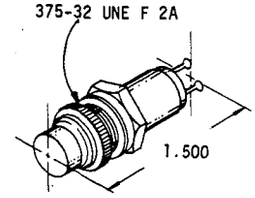

FIG 8

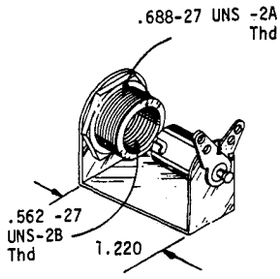

FIG 9

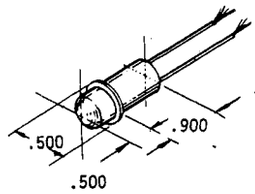

FIG 10

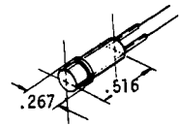

FIG 11

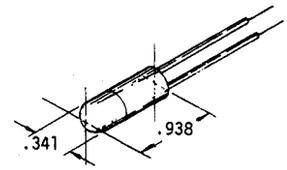

FIG 12

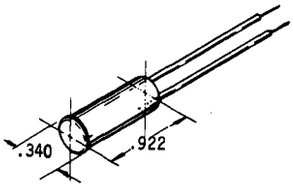

FIG 13

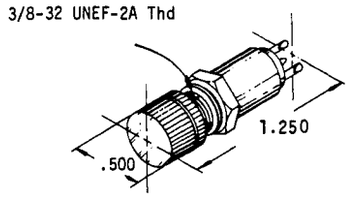

FIG 14

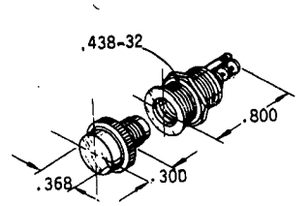

FIG 15

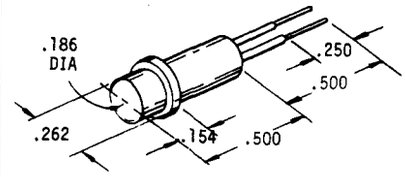

FIG 16

†† CATALOG RELIABILITY CODES

USAGE/YR	CODE
≥10	1
≥100	2
≥1 000	3
≥10 000	4
≥100 000	5
≥1 000 000	6
≥10 000 000	7

FAILURE FREQ	CODE		%/YR (median)
1/100 000	A	=	.001
1/50 000	B	=	.002
1/20 000	C	=	.005
1/10 000	D	=	.01
1/5 000	E	=	.02
1/2 000	F	=	.05
1/1 000	G	=	.1
1/500	H	=	.2
1/200	I	=	.5
1/100	J	=	1.0 +

For further explanation of this code, see page 0-25.

COST CODE

(CC COLUMN)

CODE	A	B	C	D	E	F	G	H	I	J	K	L	M	N	O
≈ VALUE with +	.75¢	2¢	3.75¢	6¢	10¢	18¢	35¢	60¢	$1	$2	$3.75	$6	$10	$18	$35+
≈ VALUE no suffix	.5¢	1.5¢	3¢	5¢	8¢	15¢	25¢	50¢	75¢	$1.50	$3	$5	$8	$15	$25
≈ VALUE with -	.2¢	1.25¢	2.5¢	4.25¢	7¢	13¢	22¢	40¢	65¢	$1.25	$2.50	$4.25	$7	$13	$22

NOTE: Costs may vary from order to order due to order quantities, vendor, etc.

LAMPS (CONT)

LAMPHOLDER

HOLDER, LENS, COVER, SHIELD COMBINATION
ALL PLASTIC USE WITH NEON LAMPS

PART NUMBER	CC	COVER AND SHIELD	CC
136-0429-00	D	Uses 337-1430-00	B
136-0430-00	F-	Uses 337-1430-00	B
136-0431-00	F+	Uses 337-1430-00	B
378-0694-00	E+	Uses 200-1254-00	E
378-0702-00	D	Uses 200-1298-00	F
378-0703-00	E+	Uses 337-1430-00	B
378-0729-00	F+	200-1482-00 or 1483	F

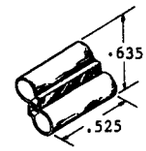

200-1483-00

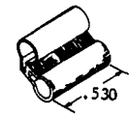

200-1482-00

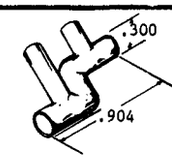

200-1298-00

200-1254-00

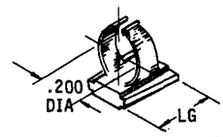

	LG
136-0429-00	.150
136-0430-00	.160
136-0431-00	.240
378-0703-00	.285

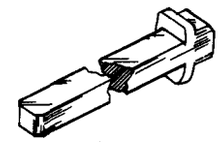

378-0702-00 - .3 Lg
378-0729-00 - .593 Lg
378-0694-00 - .4 Lg

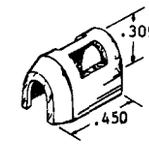

337-1430-00

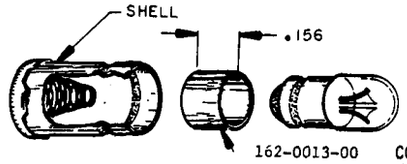

162-0013-00 CC-B+

ASSEMBLY INSTRUCTIONS FOR ALL MIDGET GROOVE LAMPHOLDERS

NOTE: Without this insulation the spring contact sometimes shorts to the outer shell.

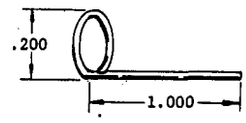

343-0043-00 CC- D+

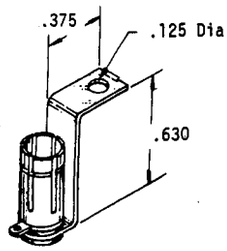

136-0396-00 CC: G+
(Accepts midget groove lamp.)

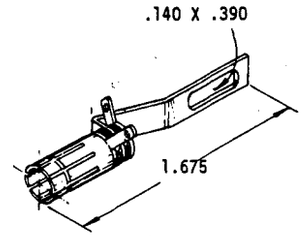

136-0273-00 CC: H
(Accepts midget groove lamp.)
RC: 4D

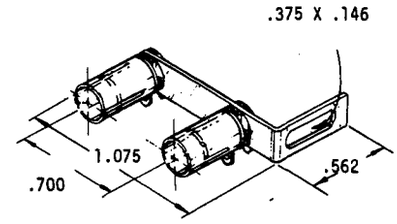

136-0277-00 CC: I
(Accepts midget groove lamps.)
RC: 3G

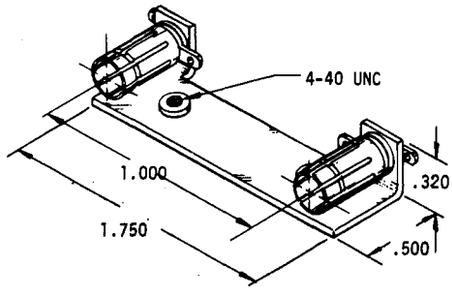

136-0456-00 CC: I
(Accepts midget groove lamps.)

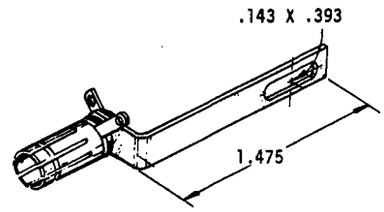

136-0264-00 CC: G+
(Accepts midget groove lamp.)

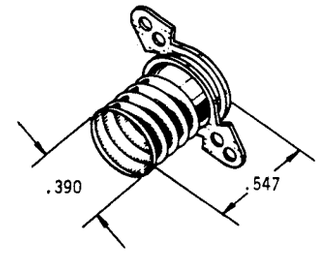

136-0458-00 CC: G+
(Accepts T-3 1/4 bulbs)

LAMPS (CONT)

LAMPHOLDER

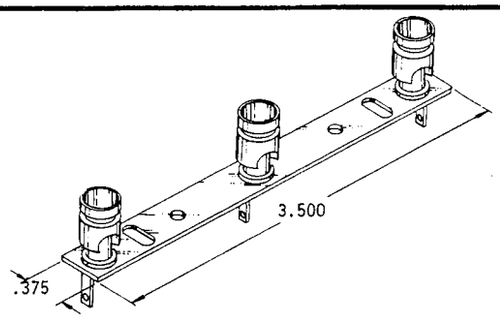

136-0445-00 CC: J-
(Accepts 3 midget groove lamps.)

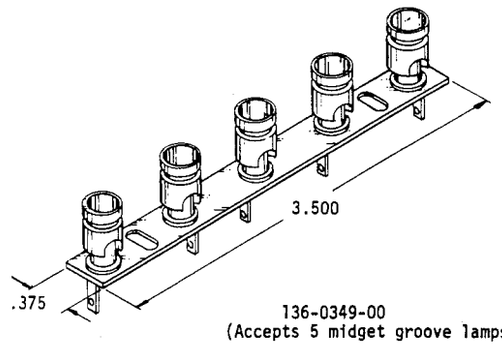

136-0349-00
(Accepts 5 midget groove lamps.)

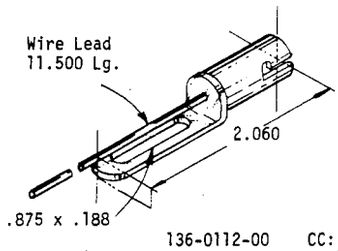

136-0112-00 CC: E+
(Accepts miniature boyonet lamp.)

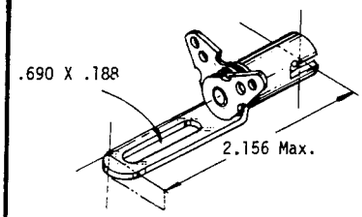

136-0035-00 CC: G
(Accepts miniature bayonet lamp.)

††RC: 4E

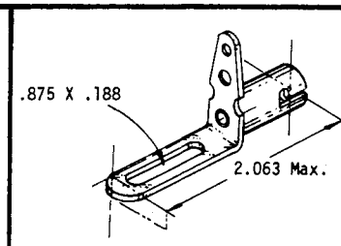

136-0001-00
(Accepts miniature bayonet lamp.)

Covers

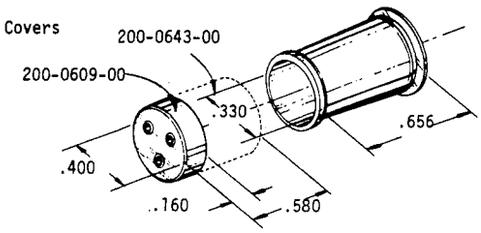

352-0084-00 CC: D+
352-0084-01 CC: E-
352-0084-02 CC: F- ††RC: 4E

(Accepts T-2 or smaller dia. unbased lamp.)

Used with lenses; 378-0541-00, 378-0541-01, 378-0541-02, or 378-0600-00.

Cover
200-0935-00

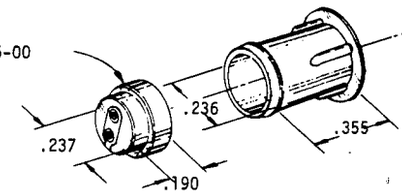

352-0157-00, White CC: E
352-0157-01, Black CC: E

(Accepts T-1 or smaller dia. unbased lamp.)

Used with lenses; 378-0602-00, 378-0602-01, or 378-0602-02.

COST CODE

(CC COLUMN)

CODE	A	B	C	D	E	F	G	H	I	J	K	L	M	N	O
≈ VALUE with +	.75¢	2¢	3.75¢	6¢	10¢	18¢	35¢	60¢	$1	$2	$3.75	$6	$10	$18	$35+
≈ VALUE no suffix	.5¢	1.5¢	3¢	5¢	8¢	15¢	25¢	50¢	75¢	$1.50	$3	$5	$8	$15	$25
≈ VALUE with -	.2¢	1.25¢	2.5¢	4.25¢	7¢	13¢	22¢	40¢	65¢	$1.25	$2.50	$4.25	$7	$13	$22

NOTE: Costs may vary from order to order due to order quantities, vendor, etc.

†† RELIABILITY CODES

USAGE/YR	CODE
≥10	1
≥100	2
≥1 000	3
≥10 000	4
≥100 000	5
≥1 000 000	6
≥10 000 000	7

FAILURE FREQ	CODE		%/YR (median)
1/100 000	A	=	.001
1/50 000	B	=	.002
1/20 000	C	=	.005
1/10 000	D	=	.01
1/5 000	E	=	.02
1/2 000	F	=	.05
1/1 000	G	=	.1
1/500	H	=	.2
1/200	I	=	.5
1/100	J	=	1.0+

For further explanation of this code, see page 0-25.

LAMPS (CONT)

LAMPHOLDER

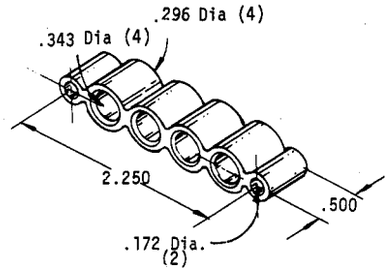

(Holds lamps shown in Fig's 2 & 3 of CARTRIDGE LAMP section) 352-0141-00 CC: G

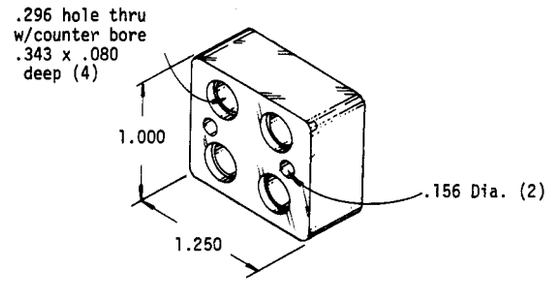

(Holds lamps shown in Fig's 2 & 3 of CARTRIDGE LAMP section) 352-0173-00 CC: G-

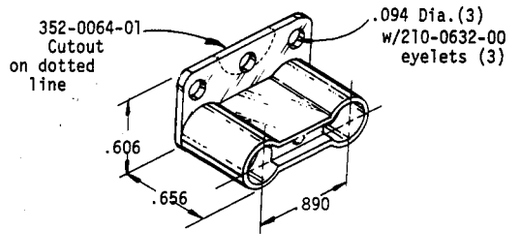

(Accepts T-2 or smaller diameter unbased lamps)

352-0064-00 CC: H-
352-0064-01 CC: I-
352-0064-02 CC: F-

(Used with one of the following lenses: 378-0541-00, 378-0541-01, 378-0541-02, and 378-0600-00).

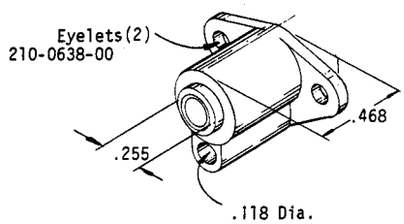

(Accepts T-2 or smaller diameter unbased)

352-0038-00

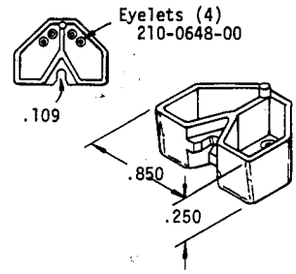

(Accepts T-1 3/4 lamp)

352-0340-00 CC: G-
352-0340-01 CC: D

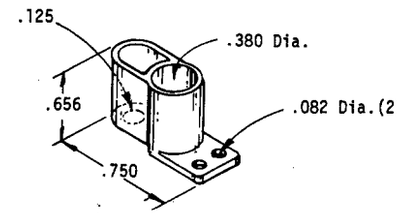

(Accepts T-2 or smaller diameter unbased lamps)

352-0067-00 CC: F+

(Used with one of the following lenses: 378-0541-00, 378-0541-01, 378-0541-02, and 378-0600-00).

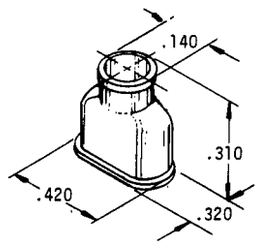

(Accepts T-1 lamp) 352-0277-00 CC: F-

(Used with one of the following lenses: 378-0690-00, 378-0690-01, 378-0690-02, 378-0690-03, 378-0690-04, 378-0690-05)

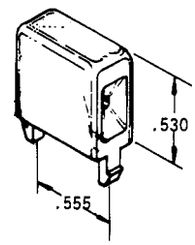

(Accepts T-1 3/4 lamp)

*352-0331-00 CC: C+

(Used with one of the following lenses: 378-0745-00, 378-0803-00, and 378-0803-01)

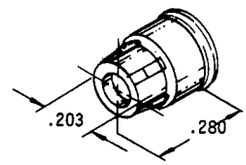

.234 O.D., .110 I.D., .280 Long

352-0366-00 CC: G-

* SAFETY CONTROLLED.

†† FOR RELIABILITY CODE, SEE PAGE 15-2.

LAMPS (CONT)

LAMPHOLDER

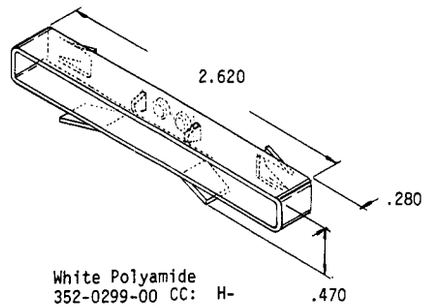

White Polyamide
352-0299-00 CC: H-
(Grat illum)

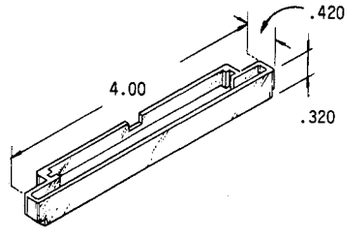

White Acetal
352-0329-00 CC - F
(Grat illum)

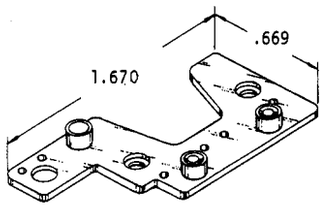

Black Acetal

352-0300-01 CC: G-

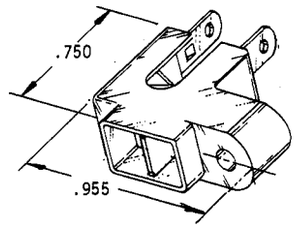

ASS'Y

1 - 131-0308-00

1 - 131-0307-00

1 - 204-0179-00

352-0063-00 CC - J+

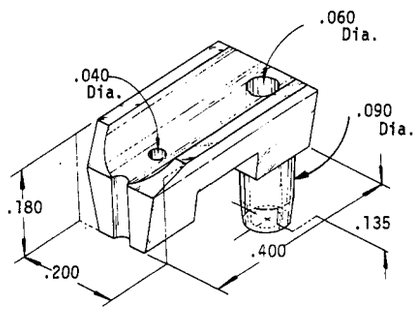

White Polyamide
136-0370-00 CC- C+

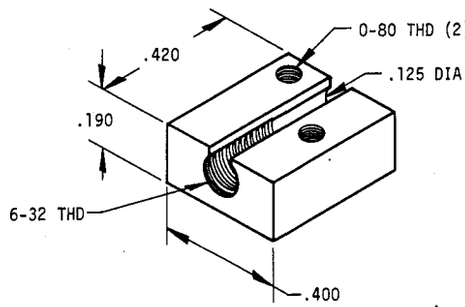

352-0239-00 CC = I +

251-1108-00 Aluminum

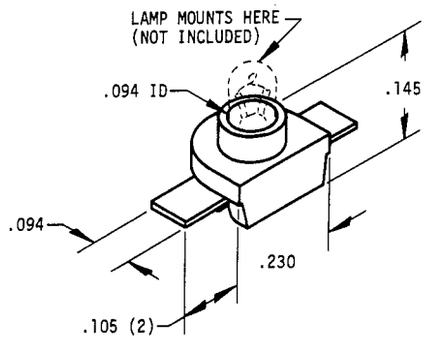

352-0174-01 CC = G+

255-0330-00 Polysulfone, Black
Bulb 150-0057-01
Assy 150-0057-02

COST CODE

(CC COLUMN)

CODE	≈ VALUE with -	≈ VALUE no suffix	≈ VALUE with +
A	.2¢	.5¢	.75¢
B	1.25¢	1.5¢	2¢
C	2.5¢	3¢	3.75¢
D	4.25¢	5¢	6¢
E	7¢	8¢	10¢
F	13¢	15¢	18¢
G	22¢	25¢	35¢
H	40¢	50¢	60¢
I	65¢	75¢	$1
J	$1.25	$1.50	$2
K	$2.50	$3	$3.75
L	$4.25	$5	$6
M	$7	$8	$10
N	$13	$15	$18
O	$22	$25	$35+

NOTE: Costs may vary from order to order due to order quantities, vendor, etc.

LAMPS (CONT)

LENS, INDICATOR LIGHT

COLOR	LENS MATERIAL	FIG	SPECIAL CHARACTERISTICS	PART NUMBER	CC
Amber	Plastic	2		378-0600-00	G-
Amber	Plastic	3		378-0613-00	F+
Amber	Plastic	9		378-0690-02	D
Amber	Plastic	9	Marked 20 MHz	378-0690-03	G+
Amber	Plastic	7		378-0602-01	C
Amber	Cellulose, Acetate Butyrate	17	Mtg Hole .250 ±.002	378-0176-00	H
Clear	Plastic	1		378-0541-00	C
Clear	Acrylic	10	2.770 Lg (A Dim.)	378-0745-00	H-
Clear	Acrylic	10	.860 Lg (A Dim.)	378-0803-00	B
Clear	Acrylic	10	1.920 Lg (A Dim.)	378-0803-01	E-
Clear	Acrylic	14		378-0746-01	F+
Clear	Polycarbonate	15		378-0869-00	
Clear	Plastic	3		378-0584-01	
White	Plastic	5	Marked A on front	378-0635-01	I-
White	Plastic	5	Marked B on front	378-0635-02	I-
White	Plastic	5	Marked S on front	378-0635-03	I-
White	Plastic	11		378-0689-00	G-
White	Plastic	11	11 378-0689-00 Assembly	378-0689-01	K
White	Plastic	5		378-0635-00	E+
White	Polycarbonate	16		378-0742-00	G-
Yellow	Plastic	6		378-0530-00	
Green	Plastic	1		378-0541-01	E-
Green	Plastic	3		378-0584-00	E
Green	Plastic	7		378-0602-00	D+
Green	SI Rubber	4	Self retaining on T-1 lamp	378-0750-00	G+
Green	Cellulose, Acetate Butyrate	17	Mtg Hole .250 ±.002	378-0177-00	H
Green	Plastic	6		378-0531-00	
Green	Glass	8		378-0513-00	H+
Green	Plastic	9	Marked TRIG'D	378-0690-06	G+
Green	Plastic	9		378-0690-00	D-
Green	Plastic	12		378-0711-00	F+
Green	Plastic	9	Marked READY	378-0690-05	G+
Red	Plastic	7		378-0602-02	D-
Red	Acrylic	13	For LED	378-0741-00	
Red	Plastic	1		378-0541-02	C
Red	Plastic	3		378-0583-00	E+
Red	Cellulose, Acetate Butyrate	17	Mtg. Hole .250 ±.002	378-0175-00	H
Red	SI Rubber	4	Self Retaining on T-1 lamp	378-0749-00	G+
Red	Plastic	6		378-0529-00	
Red	Plastic	9		378-0690-01	D-
Red	Plastic	9	Marked RESET	378-0690-04	G+
Red	Plastic	12		378-0710-00	F+
Blue	Acrylic	7		378-0602-03	G+

COST CODE

(CC COLUMN)

CODE	A	B	C	D	E	F	G	H	I	J	K	L	M	N	O
≈ VALUE with +	.75¢	2¢	3.75¢	6¢	10¢	18¢	35¢	60¢	$1	$2	$3.75	$6	$10	$18	$35+
≈ VALUE no suffix	.5¢	1.5¢	3¢	5¢	8¢	15¢	25¢	50¢	75¢	$1.50	$3	$5	$8	$15	$25
≈ VALUE with -	.2¢	1.25¢	2.5¢	4.25¢	7¢	13¢	22¢	40¢	65¢	$1.25	$2.50	$4.25	$7	$13	$22

NOTE: Costs may vary from order to order due to order quantities, vendor, etc.

LAMPS (CONT)

LENS, INDICATOR LIGHT

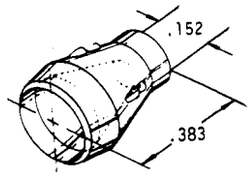

FIG 1

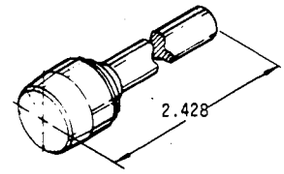

FIG 2

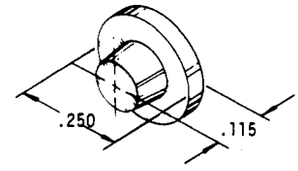

FIG 3

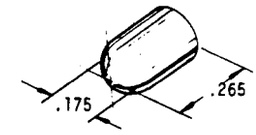

FIG 4

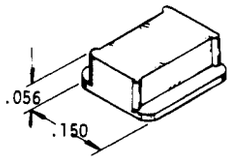

FIG 5

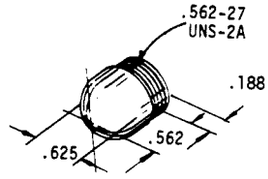

FIG 6

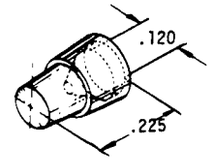

FIG 7

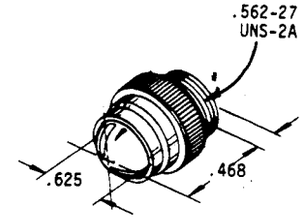

FIG 8

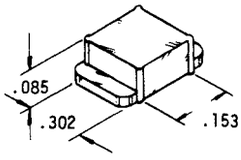

FIG 9

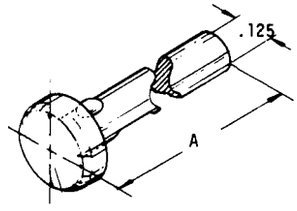

FIG 10

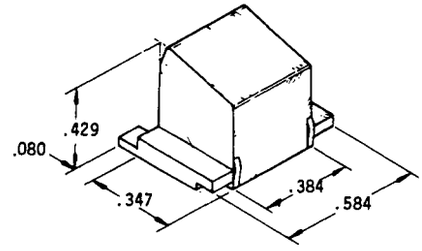

FIG 11

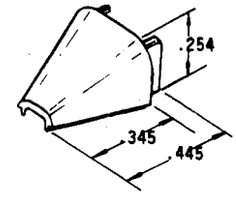

FIG 12

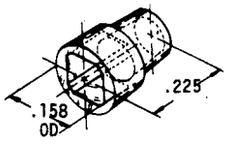

FIG 13

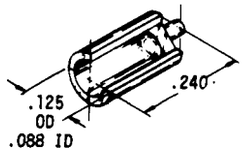

FIG 14

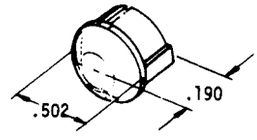

FIG 15

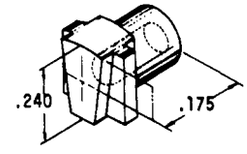

FIG 16

CROSS REFERENCE INDEX

LAMPS, LENS AND LAMPHOLDERS

15

PART NUMBER	DESCRIPTION	PAGE NO	STATUS§§
136-0001-00	Lampholder	15-9	OB
136-0025-00	Lamp, Cartridge	15-6	CR
136-0026-00	Lamp, Indicator		NP
136-0027-00	Lamp, Cartridge, Green	15-6	CS
136-0028-00	Lamp, Cartridge, Clear	15-6	OB
136-0031-00	Lamp, Cartridge, Red	15-6	OB
136-0031-01	Lamp, Cartridge, Green	15-6	OB
136-0035-00	Lampholder	15-9	CR
136-0047-00	Lampholder, Red		LS
136-0079-00	Lampholder, Green		LR
136-0112-00	Lampholder	15-9	CS
136-0152-00	Lampholder	15-9	OB
136-0160-00	Lampholder, Red		OB
136-0164-00	Lamp, Cartridge, Clear	15-6	CR
136-0205-00	Lampholder		CS
136-0223-00	Lamp, Cartridge, Green	15-6	CR
136-0244-00	Lamp, Cartridge, Green	15-6	CS
136-0264-00	Lampholder	15-8	CR
136-0273-00	Lampholder	15-8	CR
136-0277-00	Lampholder	15-8	CS
136-0279-00	Lamp, Cartridge, Green	15-6	CR
136-0349-00	Lampholder	15-9	OB
136-0370-00	Lampholder	15-11	CR
136-0382-00	Lamp, Cartridge, White	15-6	CR
136-0396-00	Lampholder	15-8	CR
136-0429-00	Lampholder	15-8	CR
136-0430-00	Lampholder	15-8	CR
136-0431-00	Lampholder	15-8	CR
136-0445-00	Lampholder	15-9	CR
136-0456-00	Lampholder	15-8	CR
136-0458-00	Lampholder	15-8	CR
136-0462-00	Lampholder		LS
136-0463-03	Lampholder, Green		LS
136-0465-00	Lampholder		DL
136-0616-00	Lampholder		OT
150-0001-00	Lamp, Incandescent	15-4	CR
150-0002-00	Lamp, Glow	15-3	CR
150-0003-00	Lamp, Glow	15-3	CR
150-0004-00	Lamp, Incandescent	15-4	CR
150-0010-00	Lamp, Glow		OB
150-0015-00	Lamp, Incandescent		CS
150-0016-00	Lamp, Incandescent		CS
150-0017-00	Lamp, Incandescent		CS
150-0018-00	Lamp, Incandescent	15-4	CS
150-0019-00	Lamp, Cartridge, White	15-6	CR
150-0020-00	Lamp, Cartridge		OB
150-0021-00	Lamp, Glow	15-3	CR
150-0022-00	Lamp, Glow		EN
150-0023-00	Lamp, Glow		NP
150-0025-00	Lamp, Glow		NP
150-0026-00	Lamp, Incandescent		OB
150-0027-00	Lamp, Glow	15-3	CR
150-0028-00	Lamp, Glow		OB
150-0029-00	Lamp, Incandescent	15-4	CR
150-0030-00	Lamp, Glow	15-3	CR
150-0031-00	Lamp, Incandescent, Green	15-4	CR
150-0032-00	Lamp, Cartridge, Amber	15-6	CS
150-0033-00	Lamp, Cartridge, Green	15-6	CR
150-0034-00	Lamp, Cartridge, Red	15-6	CS
150-0035-00	Lamp, Glow	15-3	CR
150-0036-00	Lamp, Incandescent		CS
150-0037-00	Lamp, Glow	15-3	CR
150-0038-00	Lamp, Indicator, White	15-6	CR
150-0039-00	Lamp, Cartridge		CS
150-0040-00	Lamp, Cartridge, Clear	15-6	CR
150-0041-00	Lamp, Cartridge, Amber	15-6	CS
150-0043-00	Lamp, Cartridge, White		CS
150-0044-00	Lamp, Incandescent		NP
150-0045-00	Lamp, Incandescent	15-4	CR
150-0046-00	Lamp, Incandescent	15-4	CR
150-0047-00	Lamp, Incandescent, Red	15-4	CR
150-0048-00	Lamp, Incandescent		NP
150-0048-01	Lamp, Incandescent	15-4	CR
150-0048-02	Lamp, Incandescent		NP
150-0049-00	Lamp, Incandescent	15-4	CR

PART NUMBER	DESCRIPTION	PAGE NO	STATUS §§
150-0050-00	Lamp, Glow	15-3	CR
150-0051-00	Lamp, Glow	15-3	CS
150-0052-00	Lamp, Cartridge, White	15-6	CS
150-0053-00	Lamp, Glow	15-3	CR
150-0054-00	Lamp, Incandescent	15-4	OB
150-0055-00	Lamp, Glow	15-3	CR
150-0056-00	Lamp, Cartridge, Amber		NP
150-0057-00	Lamp, Incandescent		NP
150-0057-01	Lamp, Incandescent	15-4	CR
150-0057-02	Lamp, Incandescent	15-4	CR
150-0057-03	Lamp, Incandescent	15-4	CR
150-0058-00	Lamp, Glow		OB
150-0059-00	Lamp, Incandescent	15-4	CR
150-0065-00	Lamp, Cartridge, Amber		CS
150-0065-00	Lamp, Cartridge, Green	15-6	CR
150-0066-00	Lamp, Cartridge, Red		CS
150-0067-00	Lamp, Glow	15-3	CR
150-0068-00	Lamp, Cartridge, Green		OB
150-0070-00	Lamp, Glow		OB
150-0071-00	Lamp, Glow		CS
150-0072-00	Lamp, Incandescent		OB
150-0073-00	Lamp, Glow		OB
150-0074-00	Lamp, Incandescent		CS
150-0074-01	Lamp, Incandescent		OB
150-0075-00	Lamp, Incandescent	15-4	CR
150-0076-00	Lamp, Incandescent		OB
150-0077-00	Lamp, Incandescent		NP
150-0077-01	Lamp, Incandescent	15-4	CR
150-0078-00	Lamp, Incandescent	15-4	PP
150-0079-00	Lamp, Glow		OB
150-0080-00	Lamp, Incandescent		OB
150-0082-00	Lamp, Incandescent		DL
150-0083-00	Lamp, Incandescent		CS
150-0084-00	Lamp, Glow	15-3	CR
150-0085-00	Lamp, Glow	15-3	CR
150-0086-00	Lamp, Cartridge, Green		NP
150-0087-00	Lamp, Cartridge, Green	15-6	CR
150-0088-00	Lamp, Incandescent	15-4	CR
150-0089-00	Lamp, Cartridge, Yellow	15-6	CR
150-0090-00	Lamp, Cartridge, Red	15-6	CR
150-0091-00	Lamp, Cartridge, Blue	15-6	CS
150-0092-00	Lamp, Incandescent		NP
150-0093-01	Lamp, Incandescent		NP
150-0093-01	Lamp, Incandescent	15-4	CR
150-0094-00	Lamp, Incandescent		EN
150-0097-00	Lamp, Incandescent	15-4	CR
150-0097-01	Lamp, Incandescent	15-4	CR
150-0098-00	Lamp, Incandescent		NP
150-0098-01	Lamp, Incandescent	15-4	CR
150-0099-00	Lamp, Incandescent		NP
150-0100-00	Lamp, Incandescent	15-4	CR
150-0101-00	Lamp, Incandescent		DL
150-0102-00	Lamp, Incandescent		NP
150-0102-01	Lamp, Incandescent	15-4	CR
150-0103-00	Lamp, Incandescent		LR
150-0104-00	Lamp, Cartridge, Blue	15-6	CR
150-0106-00	Lamp, Incandescent		NP
150-0106-01	Lamp, Incandescent	15-4	CS
150-0107-00	Lamp, Incandescent		NP
150-0108-00	Lamp, Incandescent	15-4	CS
150-0109-00	Lamp, Incandescent	15-4	CR
150-0111-00	Lamp, Glow	15-3	CR
150-0112-00	Lamp, Incandescent		CS
150-0113-00	Lamp, Incandescent		OB
150-0114-00	Lamp, Cartridge		OB
150-0116-00	Lamp, Incandescent	15-4	CR
150-0117-00	Lamp, Incandescent	15-4	CS
150-0118-00	Lamp, Incandescent		OB
150-0119-00	Lamp, Fluorescent		DL
150-0120-00	Lamp, Incandescent	15-4	CS
150-0121-00	Lamp, Cartridge, White	15-6	CR
150-0121-01	Lamp, Cartridge, Yellow	15-6	CR
150-0121-02	Lamp, Indicator, Green	15-6	CR
150-0121-03	Lamp, Indicator, Yellow		DL
150-0121-04	Lamp, Cartridge, Green	15-6	CR

§§ FOR STATUS CODES, SEE PAGE 15-2.

CROSS REFERENCE INDEX (CONT)

LAMPS, LENS AND LAMPHOLDERS

PART NUMBER	DESCRIPTION	PAGE NO	STATUS§§
150-0121-05	Lamp, Cartridge, Green	15-6	CR
150-0121-06	Lamp, Cartridge, Green	15-6	MP
150-0121-07	Lamp, Cartridge, Green	15-6	CR
150-0121-08	Lamp, Cartridge, Green	15-6	MP
150-0121-09	Lamp, Cartridge, Green	15-6	MP
150-0121-10	Lamp, Cartridge, Green	15-6	MP
150-0122-00	Lamp, Incandescent	15-4	CS
150-0123-00	Lamp, Cartridge, White	15-6	CR
150-0123-01	Lamp, Cartridge, Yellow	15-6	CR
150-0123-02	Lamp, Cartridge, Red	15-6	CR
150-0123-03	Lamp, Cartridge, Green	15-6	CR
150-0123-04	Lamp, Cartridge, Blue	15-6	CS
150-0123-05	Lamp, Cartridge, White	15-6	CR
150-0123-06	Lamp, Cartridge, White	15-6	PP
150-0123-07	Lamp, Cartridge, Red	15-6	CR
150-0123-08	Lamp, Cartridge, Red	15-6	CR
150-0123-09	Lamp, Cartridge, Green	15-6	CR
150-0123-10	Lamp, Cartridge, Yellow	15-6	MP
150-0123-11	Lamp, Cartridge, White	15-6	MP
150-0123-12	Lamp, Cartridge, Red	15-6	MP
150-0125-00	Lamp, Incandescent	15-4	CS
150-0127-00	Lamp, Incandescent		OB
150-0128-00	Lamp, Incandescent	15-4	CR
150-0129-00	Lamp, Incandescent	15-4	CR
150-0130-00	Lamp, Incandescent	15-4	CR
150-0131-00	Lamp, Incandescent	15-4	CR
150-0132-00	Lamp, Incandescent		CS
150-0133-00	Lamp, Cartridge, Red	15-6	CR
150-0133-01	Lamp, Cartridge, Yellow	15-6	CR
150-0134-00	Lamp, Cartridge, Green	15-6	CR
150-0135-00	Lamp, Cartridge		CS
150-0136-00	Lamp, Incandescent		CS
150-0137-00	Lamp, Incandescent	15-4	CR
150-0139-00	Lamp, Incandescent	15-4	CR
150-0170-00	Lamp, Cartridge, Green	15-6	CR
150-0171-00	Lamp, Incandescent		OB
150-0172-00	Lamp, Incandescent		DL
150-0173-00	Lamp, Glow	15-3	OB
150-0174-00	Lamp, Cartridge, Green	15-6	CR
150-0174-01	Lamp, Cartridge, Green	15-6	CR
150-0175-00	Lamp, Indicator, Amber	15-6	CR
150-0175-01	Lamp, Indicator, Amber	15-6	CR
150-0176-00	Lamp, Incandescent		CS
150-0177-00	Lamp, Incandescent		DL
150-0179-00	Lamp, Photoflash		CR
150-0180-00	Lamp, Incandescent	15-4	CR
150-0181-00	Lamp, Incandescent	15-4	CR
150-0184-00	Lamp, Cartridge, Clear	15-6	CS
150-0186-00	Lamp, Incandescent		CS
150-0187-00	Lamp, Incandescent		CS
150-0188-00	Lamp, Incandescent		CS
150-0189-00	Lamp, Incandescent	15-4	CS
150-0190-00	Lamp, Incandescent		CS
150-0191-00	Lamp, Cartridge, Amber	15-6	PP
150-0193-00	Lamp, Incandescent	15-6	PP
150-0193-01	Lamp, Incandescent	15-6	PP
150-0194-00	Lamp, Incandescent	15-4	CR
150-0195-00	Lamp, Incandescent	15-4	MP
150-0197-00	Lamp, Cartridge, Red	15-6	CR
150-0208-00	Lamp, Incandescent	15-4	PP
343-0043-00	Lampholder	15-8	CR
352-0008-00	Lampholder		CS
352-0038-00	Lampholder	15-10	OB
352-0053-00	Lampholder		OB
352-0059-00	Lampholder		DL
352-0063-00	Lampholder	15-11	CS
352-0064-00	Lampholder	15-10	CR
352-0064-01	Lampholder	15-10	CR
352-0064-02	Lampholder	15-10	CR
352-0067-00	Lampholder	15-10	CR
352-0084-00	Lampholder	15-9	CR
352-0084-01	Lampholder	15-9	CR
352-0084-02	Lampholder	15-9	CR
352-0129-00	Lampholder		CS
352-0141-00	Lampholder	15-10	CS
352-0157-00	Lampholder	15-9	CR

PART NUMBER	DESCRIPTION	PAGE NO	STATUS§§
352-0157-01	Lampholder	15-9	CR
352-0173-00	Lampholder	15-10	CS
352-0174-00	Lampholder		NP
352-0174-01	Lampholder	15-11	CR
352-0183-00	Lampholder		DL
352-0194-01	Lampholder		NP
352-0230-00	Lampholder		DL
352-0239-00	Lampholder	15-11	CR
352-0277-00	Lampholder	15-10	CR
352-0299-00	Lampholder	15-11	CR
352-0300-00	Lampholder		NP
352-0300-01	Lampholder	15-11	CR
352-0306-00	Lampholder		DL
352-0329-00	Lampholder	15-11	CR
352-0331-00	Lampholder	15-10	CR
352-0340-00	Lampholder	15-10	CR
352-0340-01	Lampholder	15-10	CR
352-0366-00	Lampholder	15-10	CS
352-0519-00	Lampholder		CS
352-0574-00	Lampholder		DL
366-1586-00	Lens, Gray		OB
366-1587-00	Lens, White		OB
366-1588-00	Lens, White		OT
366-1589-00	Lens, White		OT
366-1590-00	Lens, White		OB
378-0175-00	Lens, Red	15-12	CR
378-0176-00	Lens, Amber	15-12	CR
378-0177-00	Lens, Green	15-12	CR
378-0513-00	Lens, Green	15-12	CR
378-0529-00	Lens, Red	15-12	OB
378-0530-00	Lens, Yellow	15-12	OB
378-0531-00	Lens, Green	15-12	OB
378-0541-00	Lens, Clear	15-12	CR
378-0541-01	Lens, Green	15-12	CR
378-0541-02	Lens, Red	15-12	CS
378-0583-00	Lens, Red	15-12	CS
378-0584-00	Lens, Green	15-12	CS
378-0584-01	Lens, Clear	15-12	CM
378-0600-00	Lens, Amber	15-12	CR
378-0602-00	Lens, Green	15-12	CR
378-0602-01	Lens, Amber	15-12	CR
378-0602-02	Lens, Red	15-12	CR
378-0602-03	Lens, Blue	15-12	CR
378-0613-00	Lens, Amber	15-12	CR
378-0635-00	Lens, White	15-12	CR
378-0635-00	Lens, White	15-12	CR
378-0635-01	Lens, White	15-12	CR
378-0635-02	Lens, White	15-12	CR
378-0635-03	Lens, White	15-12	CR
378-0638-00	Lens, Amber		OB
378-0639-00	Lens, Red		OB
378-0640-00	Lens, Green		OB
378-0689-00	Lens, White	15-12	CR
378-0689-01	Lens, White (Assembly)	15-12	CR
378-0690-00	Lens, Green	15-12	CR
378-0690-01	Lens, Red	15-12	CR
378-0690-02	Lens, Amber	15-12	CR
378-0690-03	Lens, Amber	15-12	CR
378-0690-04	Lens, Red	15-12	CR
378-0690-05	Lens, Green	15-12	CR
378-0690-06	Lens, Green	15-12	CR
378-0694-00	Lens	15-8	CR
378-0702-00	Lens	15-8	CS
378-0703-00	Lens	15-8	CR
378-0710-00	Lens, Red	15-12	CR
378-0711-00	Lens, Green	15-12	CR
378-0729-00	Lens	15-8	CR
378-0741-00	Lens, Red	15-12	OB
378-0742-00	Lens, White	15-12	CR
378-0745-00	Lens, Clear	15-12	CR
378-0746-01	Lens, Clear	15-12	CR
378-0749-00	Lens, Red	15-12	CR
378-0750-00	Lens, Green	15-12	CR
378-0803-00	Lens, Clear	15-12	CR
378-0803-01	Lens, Clear	15-12	CR
378-0842-00	Lens, Clear		CS
378-0869-00	Lens, Clear	15-12	CR

§§ FOR STATUS CODES, SEE PAGE 15-2.

APPLICATION NOTES

NEON BULB INDICATORS OSCILLATE

Put together a neon bulb, a resistor, a high voltage potential and a little stray capacitance from the circuitry to ground or space, and you've got all the ingredients necessary for a relaxation oscillator.

Unfortunately, an oscillating neon indicator is not exactly desirable near a sensitive trigger circuit.

Shunt capacitance as small as 1 pF (i.e. scope probe) can cause parasitic oscillations when observing the high-resistance side of a neon lamp (over 1 megohm).

The 5000 series and some 7000 series plug-ins use neon indicators in circuits similar to the one shown below, and as such are susceptible to oscillation. In fact, one existing circuit has a large ground run directly under the neon bulb, increasing stray capacitance.

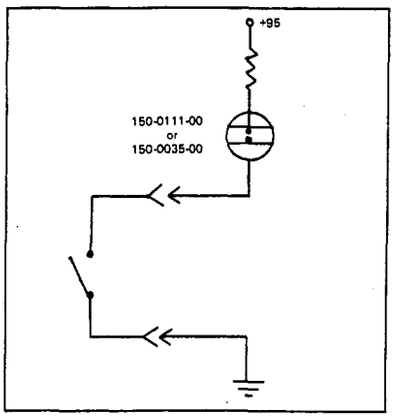

When subjected to high humidity, these neon indicators oscillate at frequencies determined by the power supply voltage and the RC time constant. The presence of moisture actually causes a change in the dielectric, increasing the stray capacitance and possibility of oscillation.

As shown in the classic curves above, the capacitor discharge time (T_d), or linearity of the sawtooth, is determined by the dynamic impedance of the neon bulb, the voltage supply and differential between E_{bkdwn} and E_{ext}, as well as the value of C.

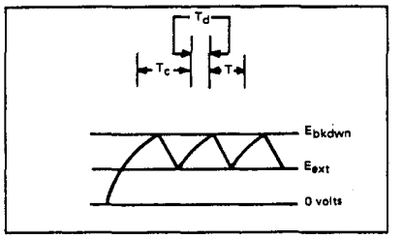

Frequency of oscillation is approximated by:

$$f = \frac{1}{2.3\ RC \log \frac{E_{app} - E_{bkdwn}}{E_{app} - E_{ext}}}$$

Some of our neon indicators have been oscillating at about 500 KHz, indicating that the capacitance involved is small. A 1 megohm resistor across the bulb temporarily stopped the oscillation but did not provide a permanent solution.

Neon bulbs will also oscillate if aging has affected the striking voltage. However, the presence of moisture is the main cause of oscillation in our neon indicators.

The best solution to this problem is simply to avoid using neon bulbs in new design.

For more information, contact Ext. 2473, Component Engineering (78-552).

APPLICATION NOTES

EXTEND INCANDESCENT LAMP LIFE

The second you turn on a minature incandescent lamp, it begins to fail. The lamp filament must be placed in a deterioration or failure mode in order to produce illumination.

Application and environmental conditions under which a lamp operates have a different effect on lamp life. Thus, actual lamp life can vary from five seconds to many hours, depending on lamp design, applied voltage, environmental constrictions and applications.

How is lamp life determined and what tradeoffs must be made to maximize incandescent lamp life expectancy?

LAMP LIFE RATINGS

Published life figures are approximations and intended for use as relative values. Since it is impractical to test all incandescent lamps at rated voltages to determine exact life, accelerated voltages are applied to determine approximate life expectancy.

"Rated average life" or "lamp life" ratings in most catalogs and specifications are an approximations of average lamp under ac operating conditions. Manufacturers do not guarantee a minimum number of operating hours because lamp life is so dependent on application.

SHOCK AND VIBRATION-VOLTAGE TRADEOFFS

High voltage (greater than 6 volts) lamps generally tend to be less stable than lower voltage lamps in terms of brightness and current and they exhibit a more erratic life performance.

One of the most common mistakes in incandescent lamp selection is the assumption that high voltage lamps are less vulnerable to shock and vibration. Just the opposite is true.

For a given lamp size, as the voltage of the filament is increased, there is generally an increase in wire length and a decrease in wire diameter (See figure 2).

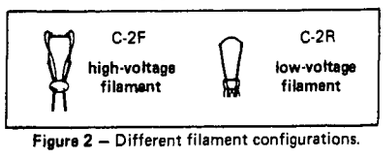

Figure 2 — Different filament configurations.

This means that more grain boundry intersections of the filament are exposed to potential failure. And, higher voltage lamps generally have lower resonant frequencies and a greater number of resonant points which results in a greater tendency for shorting between filament segments.

Being more fragile and more prone to failure, high voltage lamps are best avoided when a low voltage lamp (less than 6 volts) will do. Though more current is required for the same amount of candlepower, low voltage lamps are much more reliable.

AC VERSUS DC OPERATION

Since lamp life is primarily a function of filament evaporation, there is a minimal life loss from ac or intermittent operation. Failures under ac operation are generally due to "crystallization", although some filament evaporation is present.

However, because of filament evaporation, lamp life under DC operating condition is around 1/5 the rated average life specified. Hot spots are developed as the filament evaporation accelerates from localized increased resistance.

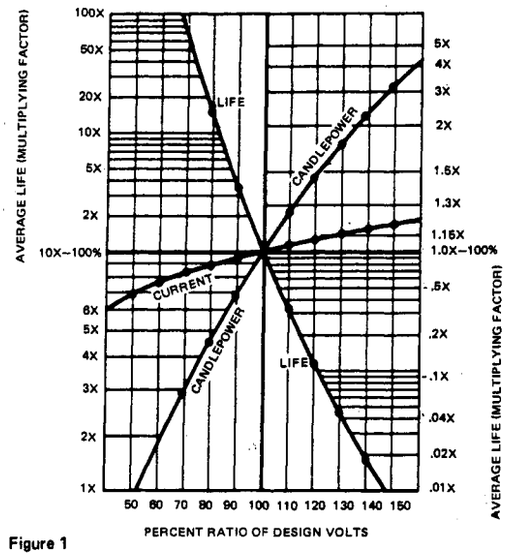

Figure 1

Electomigration on the tungsten filament results in "notching" or a sawtooth surface.

Most Tektronix incandescent lamp applications are under DC operating conditions. The increased filament evaporation causes a substantially lower life expectancy so provisions must be made for easy replacement.

Figure 1 illustrates, among other things, the tradeoffs between applied voltage and average life ratings for lamps operated under ac conditions. (Graph is accurage only for lamps at 5K hours or less rated life). Apply 125% of rated voltage will yield 0.07 x rated average life hours of operation.

For DC applications the suggested formula for life hours is:

$$\text{Life} = 1.8 \times 10^4 \text{hours} \times (d^{2.5}) \text{ EXP } \frac{\phi}{KT}$$

where d is wire diameter/N CM
ϕ = 2.72
K = 8.6×10^{-5}
T is filament temperature in °Kelvin

In general, ac operation is recommended with a maintaining current to avoid high inrush current.

VOLTAGE, CURRENT AND CANDLEPOWER TRADEOFFS

An incandescent lamp is basically a constant current device so, at a lower applied voltage candlepower can be traded off for longer life. See Figure 1. A reduction of applied voltage will increase lamp life and decrease candlepower.

As a general rule, candlepower is directly proportional to the 3.5 power of the ratio of applied voltage versus rated voltage. So,

$$\left(\frac{\text{applied voltage}}{\text{rated voltage}}\right)^{3.5} \times \text{MSCP at design volts}$$

Note: MSCP x 4 π = lumens

As illustrated in Figure 1, candlepower may be increased at the expense of lamp life.

Current consumption is approximately:

$$\left(\frac{\text{applied voltage}}{\text{rated voltage}}\right)^{0.55} \times \text{current at design volts}$$

The above two formulas are only relative guidelines and apply to ideal conditions. The farther the deviation from rated voltage, the greater the percentage error.

AGED AND SELECTED LAMPS

Some of our purchased lamps are specified for AS15. This means they are age selected by an industry standard and have a candlepower tolerance of +15%.

APPLICATION GUIDELINES

As a general rule, to maximize lamp life you should:

(1) use lower voltage lamps
(2) operate under ac conditions
(3) provide maintaining current
(4) derate to lowest filament temperature
(5) Provide impact dampening

Since lamp life is not well predicted, always located lamps for accessible, easy replacement.

For more information, direct questions or comments to Component Engineering.

MANUFACTURER'S LOGO LIST, RELIABILITY NOTES, TEK PART NUMBER SYSTEM, PRODUCT SAFETY AND EVALUATION ENGINEER & BUYER LIST

0

SECTION 0

TABLE OF CONTENTS

	PAGE(S)
LOGO LIST	0-2 THRU 0-18
LOGO INDEX	0-19 THRU 0-21
NOTES	0-22 THRU 0-31
RELIABILITY NOTES	0-23 THRU 0-30
PRODUCT SAFETY	0-32 THRU 0-35
TEK PART NUMBER SYSTEM INDEX (ALPHABETICAL)	0-36 THRU 0-40
TEK PART NUMBER SYSTEM INDEX (NUMERICAL)	0-41 THRU 0-43
GLOSSARY OF TERMS FOR STATUS CODES	0-44
CONVERSION TABLE (INCH TO MM)	0-45
EVALUATION ENGINEER & BUYER LIST	0-46 THRU 0-56

TEK DOCUMENTATION STANDARDS

TRADEMARKS, COPYRIGHTS AND RELATED PROPRIETARY MATTERS

062-1701-00

ENG STOCK TAB SYSTEM

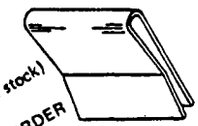

RED = LOW STOCK (or out of stock)

YELLOW = PARTS ARE ON ORDER (Used only by Stock Accountants)

If anyone other than stock accountants use the Yellow tabs, new stock does not get ordered. The Yellow tabs are placed only after new stock has been ordered.

CATALOG WRITER: NORMA PETERSON, EXT 2577.

MFR LOGO REF LIST

0

PURPOSE

WE HAVE HAD SEVERAL REQUESTS FOR A MANUFACTURER LOGO INDEX SO THAT THE SOURCE OF A PART CAN BE IDENTIFIED WHEN IT IS MARKED WITH A LOGO. THIS IS AN ATTEMPT TO FILL THAT NEED.

CONTENT ORGANIZATION

THE SHAPES SECTION (PAGE 3 THRU 6) CONTAINS THOSE LOGOS WHICH HAVE NO ALPHA OR NUMERIC DATA OR IN WHICH SUCH MAY BE SOMEWHAT OBSCURE. WE HAVE ATTEMPTED TO ORGANIZE IT SO THAT SIMILAR SHAPES ARE GENERALLY TOGETHER.

THE ALPHA SECTION (PAGE 7 THRU 17) HAS THE LOGOS IN ALPHABETICAL ORDER WITHOUT REGARD TO THE MANUFACTURER'S NAME.

THE NUMERIC SECTION (PAGE 18) HAS THE PARTS IDENTIFIERS IN NUMERICAL ORDER WITHOUT REGARD TO THE MANUFACTURER'S NAME.

THE SIZES OF THE LOGOS LISTED HEREIN ARE IN NO WAY RELATED TO ACTUAL PRACTICE, AND IN FACT THE LOGOS ARE OFTEN USED IN A NUMBER OF SIZES. ALSO, MANY ARE OFTEN USED IN JUST THE OPPOSITE BLACK AND WHITE RELATIONSHIP TO WHAT WE HAVE SHOWN.

MANY OF THE MANUFACTURERS USE THEIR FULL NAME AS WELL AS THE LOGOS LISTED. WHERE WE FOUND THEY DO NOT USE A LOGO, WE HAVE USUALLY SHOWN THE NAME THEY USE TO LET YOU KNOW THAT WE HAVE NOT JUST MISSED THEM.

TABLE OF CONTENTS

SHAPES . . . . . 0-3 THRU 0-6
ALPHABETICAL . . . . . 0-7 THRU 0-17
NUMERICAL 0-18
INDEX (IN MANUFACTURER ORDER) . . . . . 0-19 THRU 0-21

CONFIDENTIALITY

AS FAR AS WE CAN TELL, ALL OF THOSE LOGOS AND NAMES ARE REGISTERED.

MFR LOGO REF LIST (SHAPES)

	MALLORY
	SPRAGUE ELECTRIC CO.
	SIGNALITE
	WESTINGHOUSE ELECTRIC CORP
	MOTOROLA, INC.
	VARIAN ASSOCIATES
	FUJITSU LTD.
	ELECTRONIC TRANSISTORS CORP
	AMPHENOL
	ARCO ELECTRONICS
	WESTINGHOUSE BRAKE & SIGNAL CO., LTD.
	CTS CORP.
	LEMO USA INC.
	COMMUNICATIONS TRANSISTOR CORP.
	HITACHI, LTD.
	ELECTRONIC APPLICATIONS CO.
	CLAROSTAT MFG. CO., INC.
	VALVO GmbH
	ESSEX INTERNATIONAL, INC.
	HAMLIN, INC.

	INTRONICS INC.
	PITTMAN CORP. (PITMO)
	VARO SEMICONDUCTORS, INC.
	NUCLEONIC PRODUCTS CO., INC
	SEMICON INC.
	PLESSEY MICROSYSTEMS
	UNIFORM TUBE
	CENTRALAB (CRL)
	ROCKWELL INTERNATIONAL
	PAMOTOR
	LINEAR TECHNOLOGY INC.
	LANSDALE TRANSISTOR & ELEC., INC.
	BURROUGHS CORP
	SOLID STATE INDUSTRIES INC.
	SPACE POWER ELECTRONICS INC
	KDI PYROFILM CORP.
	MITEL SEMICONDUCTOR
	RELIABILITY INC.

	ELECTRONIC CONCEPTS, INC.
	BELDEN CORP.
	DATEL SYSTEMS INC.
	INTERNATIONAL DEVICES INC.
	MICRO NETWORKS CORP.
	NICHICON (AMERICA) CORP.
	SPECIALTY CONN. CO., INC.
	COMPUTER PRODUCTS
	STACO, INC.
	SOLID STATE INC.
	OHMITE
	KSW ELECTRONICS, INC.
	SYNTAR INDUSTRIES, INC.
	LISSAJOUS 2:3
	DELCO ELECTRONICS
	SHINDENGEN ELECTRIC MFG. CO., LTD.
	RECTRON LTD.

0

MFR LOGO REF LIST (SHAPES)

0

	EASTRON CORPORATION
	SOLID STATE DEVICES INC.
	COGIE SEMICONDUCTEURS
	AMEX ELECTRONICS INC.
	HI-TRON SEMICONDUCTOR CORP
	SEMICONDUCTOR CIRCUITS INC
	KMC SEMICONDUCTORS (MICROWAVE ASSOC.)
	MERCURY ELECTRONIC CO.
	E. F. JOHNSON CO.
	TAG SEMICONDUCTORS LTD.
	SOLID POWER CORP.
	PARAMETRIC INDUSTRIES, INC
	NATIONAL TRANSISTOR CORP.
	KERTRON INC.
	KEY TRONIC

	WALBERN DEVICES INC.
	GALILEO ELECTRO-OPTICS CORP
	AMPEREX ELECTRONIC CORP.
	CODI CORP.
	POWER MONOLITHICS INC.
	SYLVANIA OF GTE
	IRC DIV. OF TRW
	HART/ADVANCE (OAK ELECTRO/NETICS CORP.)
	OPAMP LABS INC.
	CHICAGO MINIATURE LAMP
	BECKMAN INST., INC.
	SEMITRON LTD.
	THOMSON - CSF & SESCOSEM ITALIANA
	UPI SEMICONDUCTOR
	POMONA ELECTRONICS
	CANNON ELEC (ITT)

	DICKSON (NOW SIEMENS CORP.)
	WESTERN DIGITAL CORP.
	GLENCO (GULTON)
	SIEMENS CORP.
	SEMICOA
	PPC PRODUCTS CORP.
	TRANSISTOR SPECIALTYS INC.
	ANALOG SYSTEMS
	CUSTOM COMPONENTS INC.
	MICROWAVE DIODE CORP.
	NORTH AMERICAN SEMICONDUCTOR CO.
	MICRO ELECTRONICS LTD.
	MARSHALL INDUSTRIES
	KOOLTRONIC, INC.
	SILEC-SEMI-CONDUCTEURS

MFR LOGO REF LIST (SHAPES)

	DIODE TRANSISTOR CO., INC.
	TRANSISTOR INTERNATIONAL CORP.
	PHILIPS ELECTRONIC LTD.
	SEMICON 2000
	STANDARD REFERENCE LABS. INC.
	FERRANTI LTD.
	PETERSON RADIO (PR CRYSTALS)
	TEXAS INSTRUMENTS
	CHERRY ELEC. PRODUCTS CORP.
	DEUTSCH FASTENER CORP.
	STACKPOLE COMPONENTS CO.
	SEALECTRO
	ELCO INDUSTRIES, INC. TWO LINES EXTENDING FROM THE SHANK UNDER THE HEAD.
	MEPCO/ELECTRA, INC.
	SEMI, INC., A DIV. OF E.M.&M. CORP.

	SOLID STATE SYSTEMS
	MULLARD LTD.
	MATSUO ELECTRONICS
	MALCO (MICRODOT)
	MONOLITHIC MEMORIES INC.
	MALCO (MICRODOT)
	MICROPAC INDUSTRIES INC.
	GHZ DEVICES INC.
	BECKMAN INST., INC.
	BOWMAR INC.
	HYBRID SYSTEMS CORP.
	FAIRCHILD INDUSTRIES, INC. (Not Fairchild Semiconductors)
	RODAN INDUSTRIES
	LITTON SYSTEMS, INC.
	ROTRON INC.
	UNITRODE
	ULTRONIX, INC.
	AMERICAN POWER DEVICES, INC.

	AMERICAN MICRO-SYSTEMS, INC (AMI)
	INTECH/FMI INC.
	HUGHES CONNECTING DEVICES
	INTERNATIONAL RECTIFIER
	SILICON GENERAL, INC.
	HARRIS SEMICONDUCTOR
	ALPHA INDUSTRIES INC.
	ELECTRONIC ARRAYS
	EPITEK ELECTRONICS LTD.
	TRW
	NATIONAL SEMICONDUCTOR CORP.
	E-SYSTEMS (MEMCOR ELECTRONIC COMP)
	ZILOG
	EXAR INTEGRATED SYSTEMS INC.
	SEMITRONICS CORP.

0

MFR LOGO REF LIST (SHAPES)

0

	NATIONAL SEMICONDUCTOR CORP.
	KINGS
	SYNERTEK
	CENTRE ENGINEERING
	COMPENSATED DEVICES INC.
	TECCOR ELECTRONICS INC.
	S T SEMICON INC.
	SIGNETICS CORP.
	SCHURTER AG
	GENERAL INST CORP. (ALSO C. P. CLARE)
	CAPCO INC.
	EL-MENCO (ELECTRO-MOTIVE MFG. CO.)
	SILICONIX, INC.
	GORDOS
	GENERAL SEMICONDUCTOR IND., INC.
	LEMO USA, INC.
	COMPUTER LABS

	GERMANIUM POWER DEVICES CORP.
	KELVIN ASSOCIATES
	DRAKE MFG. CO. (GEN INSTR.)
	CUTLER-HAMMER
	CHROMERICS, INC.
	AMERICAN ELECTRONICS, INC.
	ADVANCED MICRO DEVICES, INC
	TELEDYNE SEMICONDUCTOR
	GOULD
	Q.D.C. CORP.
	INTECH/FMI INC.
	CORCOM, INC.
	SOLID STATE SCIENTIFIC INC.
	ELECTROCUBE
	FERROXCUBE

	MOTOROLA, INC.
	VARADYNE
	ANALOG DEVICES
	SWITCHCRAFT, INC.
	MATSUSHITA ELECTRIC CORP.
	MITSUBISHI ELECTRIC CORP
	HIGH VOLTAGE DEVICES
	SEMTECH CORP.
	VICTOREEN
	PHOTO-THERM
	CENTRALAB (CRL)
	OMNI SPECTRA, INC.
	PMI (PRECISION MONOLITHICS, INC.)
	ELCO INDUSTRIES, INC.
	DIGITRAN CO. (THE)
	ELDRE COMPONENTS, INC. (COMPONENTS, INC.)

MFR LOGO REF LIST

(ALPHA)

PAGES 7 THRU 17

MFR LOGO REF LIST (ALPHA)

0

	AMPHENOL
A	AMPEREX ELECTRONIC CORP.
	AMEX ELECTRONIC INC.
	KMC SEMICONDUCTORS (MICROWAVE ASSOC.)
	ALLEN-BRADLEY
Acopian	ACOPIAN CORP.
AEG	AEG - TELEFUNKEN
AEI	A.E.I. SEMICONDUCTORS LTD.
AEI	AMERICAN ELECTRONICS, INC.
Aertech	AERTECH INDUSTRIES
	ALPHA INDUSTRIES INC.
ALCO	ALCO ELECTRONIC PROD.
ALPHA	ALPHA WIRE CORP.
	AKSJESELSKAPET MIKRO-ELECTRONIKK
AMI	AMERICAN MICRO-SYSTEMS, INC. (AMI)
AMP	AMP, INC.
	AMERICAN POWER DEVICES, INC.
	ANALOG SYSTEMS

ATC	AMERICAN TECHNICAL CERAMICS
AVX	AVX
	BURROUGHS CORP.
	BECKMAN INST., INC.
	BOURNS, INC.
BB	BURR-BROWN RESEARCH CORP.
BBC	BROWN BOVERI CORP.
BEL	BHARAT ELECTRONICS LTD.
	BERG ELECTRONICS, INC.
BARBER COLMAN COMPANY	BARBER COLEMAN CO.
Buehler	BUEHLER PRODUCTS, INC.
BURNDY	BURNDY CORP.
BUSS	BUSSMAN
BSI	BRITISH STANDARDS INSTITUTION (Standards Compliance)
	COGIE SEMICONDUCTEURS
	CADDOCK ELECTRONICS, INC.
CAL-R	CAL-R, INC.
CAMBION	CAMBRIDGE THERMIONIC
CANNON ITT	CANNON ELECTRIC (ITT)
CAPCO	CAPCO, INC.
CBXK	McCOY ELECTRONICS CO.

MFR LOGO REF LIST (ALPHA)

CC	CRYSTEK CRYSTALS CORP.
CCC	CONTINENTAL CONNECTOR CORP.
	CUSTOM COMPONENTS INC.
C-D	CORNELL-DUBILIER ELECTRIC CORP.
CD	
	HUGHES CONNECTING DEVICES
CDE	CORNELL-DUBILIER ELECTRIC CORP.
	COMPENSATED DEVICES INC.
Cermetek microelectronics	CERMETEK MICROELECTRONICS
C. E.	CENTRE ENGINEERING
	CALVERT SEMICONDUCTORS INC.
CGW	CORNING ELECTRONIC COMPONENTS
CG-W	
	CUTLER-HAMMER
CI	COMPONENTS, INC. (ELDRE)
CINCH	TRW
CK	C & K
	COMPUTER LABS.

CLARE	C. P. CLARE & CO. (GEN. INST. CORP.)
	CLAROSTAT MFG. CO., INC.
CM	CHICAGO MINIATURE LAMP
M1 &	MURATA
	CORCOM, INC.
	COMPUTER PRODUCTS
CR	CAL-R, INC.
CRL & & CRL	CENTRALAB ELECTRONICS, INC.
CSA &	CANADIAN STANDARDS ASSN.
CSR	CSR INDUSTRIES INC.
	CTS CORP.
CSE	DENMARK (Standards Compliance)
	DENMARK (Standards Compliance)
	DATEL SYSTEMS INC.
	DICKSON (NOW SIEMENS CORP.)
DALE	DALE ELECTRONICS, INC.
DDC	ILC DATA DEVICES CORP.
	DELCO ELECTRONICS
DEMKO	DENMARK (Standards Compliance)

0

MFR LOGO REF LIST (ALPHA)

0

iD	INTERNATIONAL DEVICES INC.
DIALCO®	DIALIGHT
D.T.	DIODE TRANSISTOR CO., INC.
DMC	DYNAMIC MEASUREMENTS CORP.
DRU	CENTRALAB ELECTRONICS DIV.
VDE & DVE	GERMANY (Standards Compliance)
E	ERIE TECHNICAL PRODUCTS, INC.
	EPITEK ELECTRONICS LTD.
	ELECTROCUBE
	ELECTRONIC CONCEPTS
	ELECTRONIC ARRAYS
E.A.C.	ELECTRONIC APPLICATIONS CO.
ECI	ELDRE COMPONENTS, INC.
EDAC	EDAC, INC.
-edi-	ELECTRONICS DEVICES INC.
EFJ	E. F. JOHNSON
EM	EL-MENCO (ELECTRO-MOTIVE MFG. CO.)
EMCO	EMCO (ENGLEMANN MICROWAVE CO.)
EMM	SEMI, INC. A DIV. OF E.M.&M. CORP.
ERIE	ERIE TECHNICAL PRODUCTS, INC.
	E-SYSTEMS (MEMCOR ELECTRONIC COMPONENTS)

esc	ELM STATE ELECTRONICS INC.
ETC	ELECTRONIC TRANSISTORS CORP.
EVEREADY	UNION CARBIDE CORP.
F	FAIRCHILD SEMICONDUCTOR (FAIRCHILD CAMERA & INSTRUMENT CORP.)
&	FAIRCHILD INDUSTRIES, INC. (Not Fairchild Semiconductors)
	FERROXCUBE
F	CIRCLE F INDUSTRIES
FAIRCHILD	FAIRCHILD SEMICONDUCTOR (FAIRCHILD CAMERA & INSTRUMENT CORP.)
Fenwal™ Electronics	FENWAL ELECTRONICS
FMC	FMC SEMICONDUCTOR INDUSTRIES INC.
FMI	INTECH/FMI INC.
$	FUJITSU LTD.
FUSETRON	BUSSMAN

MFR LOGO REF LIST (ALPHA)

G	GERMANIUM POWER DEVICES CORP.
Gates	GATES ENERGY PRODUCTS, INC.
GE	G.E. (GENERAL ELECTRIC)
GHz	GHz DEVICES
GHZ	
GI	GENERAL INSTRUMENT CORP.
G	GLENCO (GULTON)
GR	GENERAL RADIO CO. (GR)
GR	
Grayhill INC	GRAYHILL, INC.
GT	GENERAL TRANSISTOR CORP.
GTE	GENERAL TELEPHONE & ELECTRIC
H	HART/ADVANCE (OAK ELECTRO/NETICS CORP.)
H & H	HARRIS SEMICONDUCTOR
C-D	HUGHES CONNECTING DEVICES
HE	HUNTINGTON ELECTRIC INC.
HEI	
HELIPOT	BECKMAN INSTRUMENTS, INC.
HELITRIM	

HMC	HEYMAN MFG. CO. (HEYCO)
HEYCO	
hp	HEWLETT-PACKARD
HSE	HYBRID SEMICONDUCTORS & ELECTRONIC INC.
HT	HI-TRON SEMICONDUCTOR CORP.
HUBBELL	HUBBELL (HARVEY HUBBELL, INC.)
HVD	HIGH VOLTAGE DEVICES, INC.
HVD	
S	SILICONIX, INC.
i & i	INTEL CORP.
INTERSIL & i	INTERSIL
iD	INTERNATIONAL DEVICES INC.
IEC	INTERNATIONAL ELECTRONICS
IOR	INTERNATIONAL RECTIFIER
IRC	IRC DIV. OF TRW
ITT & ITT	ITT SEMICONDUCTORS
itw	ILLINOIS TOOL WORKS (PAKTRON)
ITW	
IWBS	SEMI, INC. A DIV. OF E.M.&M. CORP. (UPSIDE DOWN)

0

MFR LOGO REF LIST (ALPHA)

0

JOHNSON	E. F. JOHNSON CO.
JETL	JAPANESE ELECTRICAL TEST LAB (Standards Compliance)
	KSW ELECTRONIC, INC.
	KELVIN ASSOCIATES
	KSC SEMICONDUCTOR CORP.
	KEYTRONIC
	KERTRON INC.
KEMET	UNION CARBIDE CORP.
KERAKAPS	CENTRE ENGINEERING
KLIXON	TEXAS INSTRUMENTS, INC.
KMC	KMC SEMICONDUCTORS (MICROWAVE ASSOCIATES)
KEMA KEUR & KEMA KEUR	HOLLAND (Standards Compliance)
	OPAMP LABS INC.
L	LITRONIX, INC.
	LEMO USA, INC.
LF	LITTLEFUSE, INC.
	LITTON SYSTEMS, INC.
	RODAN INDUSTRIES, INC.
LICON	LICON
LTI	AMPEREX ELECTRONIC CORP.

LIMITRON	BUSSMAN
LTE & LTE	LANSDALE TRANSISTOR & ELECTRONICS, INC.
LTI	LINEAR TECHNOLOGY INC.
3M COMPANY & 3M	MINNESOTA MINING & MFG. CO.
	MULLARD LTD.
SILICON	*SILICON TRANSISTOR CORP*
M	MONSANTO
m	MATSUO ELECTRONICS
M	MALLORY
	MITEL SEMICONDUCTOR
M	MUCON (REPUBLIC ELECTRONICS CORP.)
M	METHODE ELECTRONICS, INC.
M	MOLEX, INC.
M & M	MOTOROLA, INC.
M1 & M	MURATA
m & m	MALCO (MICRO-DOT)
Mii	MICROPAC INDUSTRIES INC.
M	MIDWEST MICROWAVE

MFR LOGO REF LIST (ALPHA)

2M	SEMICON 2000
MALLORY	MALLORY
MAGNACRAFT	MAGNACRAFT
MC	MICRO COMPONENTS CORP.
McCOY	McCOY ELECTRONICS CO. (OAK IND., INC.)
MDC	MICROWAVE DIODE CORP.
MDI	MODULAR DEVICES INC.
MWE	MEPCO/ELECTRA, INC.
ME	MILLER ELECTRIC
METOHM	WARD-LEONARD
mi	MARSHALL INDUSTRIES
MICRO	MICROSEMICONDUCTOR CORP.
MICRO SWITCH	MICROSWITCH
Miller	J. W. MILLER
MMI	MONOLITHIC MEMORIES, INC.
MIL	MIL ELECTRONICS INC.
MN	MICRO NETWORKS CORP.
MOS	MOS TECHNOLOGY, INC.
MOSTEK CORPORATION	MOSTEK CORP.

MSC	MICROWAVE SEMICONDUCTOR CORP.
MSI	MSI ELECTRONICS
MX	MOLEX, INC.
NEMCO & N	NORWAY (Standards Compliance)
N	NATEL ENGINEERING CO., INC.
NAS	NORTH AMERICAN SEMICONDUCTOR CO.
nci INCORPORATED	NATIONAL COMPONENTS INDUSTRIES INC.
NEC	NEC MICROCOMPUTERS, INC. (NIPPON ELECTRIC CO., LTD.)
Nichicon	NICHICON (AMERICA) CORP.
NJS SEMICONDUCTORS	NEW JERSEY SEMICONDUCTOR PRODUCTS CO., INC.
NJS	
NKT	NEWMARKET TRANSISTOR LTD.
NP	NUCLEONIC PRODUCTS CO., INC.
NPC	
N & NS & NS	NATIONAL SEMICONDUCTOR CORP.
NSC	
NSL	
NTC	NATIONAL TRANSISTOR CORP.
NYT	NYTRONICS COMPONENTS GROUP, INC.
OC	OPAMP LABS INC.

0

MFR LOGO REF LIST (ALPHA)

0

	OHMITE
oei & OEI	OPTICAL ELECTRONICS INC.
Omni Spectra, Inc.	OMNI SPECTRA, INC.
OVE & ÖVE	AUSTRIA (Standards Compliance)
	PPC PRODUCTS CORP.
PAKTRON	PAKTRON DIV. OF ILLINOIS TOOL WORKS
PD&E	PD & E, INC.
	POMONA ELECTRONICS
PFR	KDI PYROFILM
PHILCO	PHILCO RADIO TELEVISAO LTDA.
PHILIPS	PHILIPS ELECTRONIC LTD.
PI	PARAMETRIC INDUSTRIES, INC.
PITMAN	PITTMAN CORP. (THE)
PMI	PRECISION MONOLITHICS, INC. (PMI)
PR & PR & PR CRYSTALS	PETERSON RADIO CO., INC. (PR CRYSTALS)
	BERG ELECTRONICS INC.
	Q.D.C. CORP.
	RELIABILITY INC.

	RODAN INDUSTRIES INC.
	LITTON SYSTEMS, INC.
	ROTRON, INC.
RAYTHEON	RAYTHEON
RAY	
RCA	RCA (RADIO CORP. OF AMERICA)
RCL	RCL
RMC	RADIO MATERIALS CO.
Rohm	R-OHM CORP.
rpc	RPC
rpc	
RpC	
RSM	SENSITRON SEMICONDUCTORS
RTC	R.T.C. LaRADIOTECHNIQUE-COMPELEC
	UNDERWRITERS LABS. COMPONENT RECOGNITION
	ANALOG SYSTEMS (UPSIDE DOWN)
SEV &	SWITZERLAND (Standards Compliance)
SEMKO &	SWEDEN (Standards Compliance)

MFR LOGO REF LIST (ALPHA)

&	SIGNETICS CORP.
	SIGNALITE
	SEALECTRO
	SCHURTER AG
	SOLID STATE INC.
	SOLID POWER CORP.
	SOLID STATE INDUSTRIES INC.
	SEMITRONICS CORP.
	SIGNETICS CORP.
	SYNERTEK
&	SYLVANIA OF GTE
	SOLITRON DEVICES, INC.
	SILICON TRANSISTOR CORP.
	SEMICON 2000
	CANADIAN STDS. ASSN.
SAGE	NYTRONICS COMPONENTS GROUP, INC.
SANGAMO & SANG & SAN	SANGAMO ELECTRIC CO.
SANYO	TOKYO SANYO ELECTRIC CO., LTD.
	SEMICONDUCTOR CIRCUITS INC.

	SWITCHCRAFT, INC.
	SEMICOA
	SPECIALTY CONNECTOR CO., INC.
SCI	SCIENTIFIC COMPONENTS INC.
SCOTCH	3M (MINNESOTA MINING & MFG.)
SEMI	SEMI, INC., A DIV. OF E.M.&M. CORP.
	FUJITSU LTD.
&	SILICON GENERAL, INC.
SGS ATES	SGS-ATES COMPONENTI ELETTRONICI
SHALL-X	SHALLCROSS RESISTOR PROD. (CUTLER-HAMMER)
	SIEMENS CORP.
	SILICONIX, INC.
	STACO, INC.
	SYNTAR INDUSTRIES INC.
	SEMICON INC.
	SEMICON INC.
SIGMA	SIGMA INSTRUMENTS, INC.
	SEMITRON LTD.
	SPACE POWER ELECTRONICS INC.

0

MFR LOGO REF LIST (ALPHA)

0

Spectrol	SPECTROL ELECTRONICS CORP.
SSC	SILEC-SEMI-CONDUCTEURS
SSDI	SOLID STATE DEVICES INC.
	SOLID STATE SYSTEMS
SSS	SOLID STATE SCIENTIFIC
	S T SEMICON INC.
STANCOR	ESSEX INTERNATIONAL, INC.
SIL	SILICON TRANSISTOR CORP.
STi	SEMICONDUCTOR TECHNOLOGY INC.
SW & SW	STEWART WARNER
SX	SHALLCROSS RESISTOR PROD. (CUTLER-HAMMER)
	TECCOR ELECTRONICS INC.
	TECHNICAL WIRE PRODUCTS, INC.
	THERMALLOY, INC.

TAG	TAG SEMICONDUCTORS LTD.
TECKNIT	TECHNICAL WIRE PRODUCTS, INC.
	ELECTRONIC TRANSISTORS CORP.
tec	TECNETICS INC.
Tek & Tektronix &	TEKTRONIX, INC.
	AEG - TELEFUNKEN
TEPRO	TEPRO OF FLORIDA, INC.
TEXTOOL	TEXTOOL
TFK	AEG - TELEFUNKEN
TFS	THICK FILM SYSTEMS, INC.
TFS	
THERMOFIT	RAYCHEM
THM	THERMALLOY, INC.
TI	TEXAS INSTRUMENTS, INC.
	TRANSISTOR INTERNATIONAL CORP.
TMI	TRANSMAGNETICS INC.
TRIMPOT	BOURNS, INC.
TRON	BUSSMAN
TRW	TRW
tsi	TRANSISTOR SPECIALTYS INC.

MFR LOGO REF LIST (ALPHA)

&	UNITRODE
	MICROWAVE ASSOCIATES INC.
UCC	UNION CARBODE CORP.
	MICRO ELECTRONICS LTD.
	ULTRONIX, INC.
	UNDERWRITERS LABORATORIES, INC.
ULT	ULTRONIX, INC.
	UPI SEMICONDUCTOR
	UNDERWRITERS LABS., INC. COMPONENT RECOGNITION
	UNIFORM TUBE
	UNI-TRAN SEMICONDUCTOR CORP.
	VARADYNE
	VICTOREEN
	VITRAMON, INC.
	VARIAN
	VALVO
VIKING	VIKING
VDE &	GERMANY (Standards Compliance)

	VITRAMON, INC.
	WESTINGHOUSE BRAKE & SIGNAL CO., LTD.
	WESTINGHOUSE ELECTRIC CORP.
	MIDWEST MICROWAVE (UPSIDE-DOWN)
	WALBERN DEVICES INC.
WESTCODE	WESTINGHOUSE BRAKE & SIGNAL CO., LTD.
WL	WARD LEONARD
	SEMI, INC. A DIV. OF E.M.&M. CORP. (UPSIDE-DOWN)
	WATKINS-JOHNSON CO.
	EXAR INTEGRATED SYSTEMS INC.
	ZILOG
	NATEL ENGINEERING CO., INC. (SIDEWAYS)
	ZELTEX, INC.

0

MFR LOGO REF LIST (NUMERIC)

0

II	INTRONICS INC.
1	MALLORY
2	SPRAGUE ELECTRIC CO. (EIA DESIGNATION)
2M	SEMICON 2000
19	CLAROSTAT MFG. CO., INC. (EIA) (THIS NO. FOLLOWED BY DATE CODE)
50	CHICAGO SWITCH (EIA)
111	AMPEREX ELECTRONIC CORP. (EIA)
235	MALLORY (EIA)
274	RCA (EIA)
14193	CAL-R, INC. (THIS NO. IS CAL-R FEDERAL SOURCE CODE)
54294	SHALLCROSS RESISTOR PROD. (CUTLER-HAMMER)

MFR LOGO REF LIST (INDEX)

MANUFACTURER'S NAME	PAGE NO.
ACORPIAN CORP.	0-8
ADVANCED MICRO DEVICES, INC.	0-6
AEG - TELEFUNKEN	0-8 & 16
A.E.I. SEMICONDUCTORS LTD.	0-8
AERTECH INDUSTRIES	0-8
AKSJESELSKAPET MIKRO-ELECTRONIKK	0-8
ALCO ELECTRONIC PROD.	0-8
ALLEN-BRADLEY	0-8
ALPHA INDUSTRIES, INC.	0-5 & 8
ALPHA WIRE CORP.	0-8
AMERICAN ELECTRONICS, INC.	0-6 & 8
AMERICAN MICRO-SYSTEMS, INC.	0-5 & 8
AMERICAN POWER DEVICES, INC.	0-5 & 8
AMERICAN TECHNICAL CERAMICS	0-8
AMEX ELECTRONICS, INC.	0-4 & 8
AMI	0-5 & 8
AMPEREX ELECTRONIC CORP.	0-4, 8 & 12 & 18
AMPHENOL	0-3 & 8
AMP, INC.	0-8
ANALOG DEVICES	0-6
ANALOG SYSTEMS	0-4 & 8
ARCO ELECTRONICS, INC.	0-3
AUSTRIA (STDS COMPLIANCE)	0-14
AVX	0-8
BARBER COLEMAN CO.	0-8
BECKMAN INSTRUMENT, INC.	0-4, 5 & 8 & 11
BELDEN CORP.	0-3
BERG ELECTRONICS, INC.	0-8 & 14
BHARAT ELECTRONICS LTD.	0-8
BOURNS, INC.	0-8 & 16
BOWMAR, INC.	0-5
BRITISH STDS. INSTITUTE	0-8
BROWN BOVERI CORP.	0-8
BUEHLER PRODUCTS, INC.	0-8
BURNDY CORP.	0-8
BURR-BROWN RESEARCH CORP.	0-8
BURROUGHS CORP.	0-3 & 8
BUSSMAN	0-8, 10, 12 & 16
CADDOCK ELECTRONICS, INC.	0-8
CAL-R, INC.	0-8, 9 & 18
CALVERT SEMICONDUCTORS, INC.	0-9
CAMBRIDGE THERMIONIC	0-8
CANADIAN STANDARDS ASSN.	0-9 & 15
CANNON ELECTRIC	0-4 & 8
CAPCO, INC.	0-6 & 8
CENTRALAB ELECTRONICS, INC.	0-3, 6, 9 & 10
CENTRE ENGINEERING	0-6, 9 & 12
CHERRY ELEC. PRODUCTS CORP.	0-5
CHICAGO MINIATURE LAMP	0-4 & 9
CHICAGO SWITCH	0-18
CHROMERICS, INC.	0-6
CINCH	0-9
CIRCLE F INDUSTRIES	0-10
C & K	0-9
CLAROSTAT MFG. CO., INC.	0-3, 9 & 18
CODI CORP.	0-4
COGIE SEMICONDUCTEURS	0-4 & 8

MANUFACTURER'S NAME	PAGE NO.
COMMUNICATIONS TRANSISTOR CORP.	0-3
COMPENSATED DEVICES, INC.	0-6 & 9
COMPONENTS, INC.	0-9 & 10
COMPUTER LABS	0-6 & 9
COMPUTER PRODUCTS	0-3 & 9
CONTINENTAL CONNECTOR CORP.	0-9
CORCOM, INC.	0-6 & 9
CORNELL-DUBLIER ELECTRIC CORP.	0-9
CORNING ELECTRONIC COMPONENTS	0-9
C. P. CLARE & CO.	0-6 & 9
CRL	0-3 & 6
CRYSTEK CRYSTALS CORP.	0-9
CSR INDUSTRIES, INC.	0-9
CTS CORP.	0-3 & 9
CUSTOM COMPONENTS, INC.	0-4 & 9
CUTLER-HAMMER	0-6 & 9
DALE ELECTRONICS, INC.	0-9
DATEL SYSTEMS, INC.	0-3 & 9
DELCO ELECTRONICS	0-3 & 9
DENMARK (STDS. COMPLIANCE)	0-9
DEUTSCH FASTENER CORP.	0-5
DIALIGHT	0-10
DICKSON	0-4 & 9
DIGITRAN CO.	0-6
DIODE TRANSISTOR CO., INC.	0-5 & 10
DRAKE MFG. CO.	0-6
DYNAMIC MEASUREMENTS CORP.	0-10
EASTRON CORPORATION	0-4
EDAC, INC.	0-10
E. F. JOHNSON	0-4, 10 & 12
ELCO INDUSTRIES, INC.	0-5 & 6
ELDRE COMPONENTS, INC.	0-6, 9 & 10
ELECTROCUBE	0-6 & 10
ELECTRO-MOTIVE MFG. CO.	0-6
ELECTRONIC APPLICATIONS CO.	0-3 & 10
ELECTRONIC ARRAYS	0-5 & 10
ELECTRONIC CONCEPTS, INC.	0-3 & 10
ELECTRONIC TRANSISTORS CORP.	0-3, 10 & 16
ELECTONIC DEVICES, INC.	0-10
EL-MENCO	0-6 & 10
ELM STATE ELECTRONICS, INC.	0-10
EMCO	0-10
E. M. & M. CORP.	0-5, 10 & 11 & 15
ENGLEMANN MICROWAVE CO.	0-10
EPITEK ELECTRONICS, INC.	0-5 & 10
ERIE TECHNICAL PRODUCTS, INC.	0-10
ESSEX INTERNATIONAL, INC.	0-3 & 16
E-SYSTEMS	0-5 & 10
EXAR INTEGRATED SYSTEMS, INC.	0-5 & 17
FAIRCHILD INDUSTRIES, INC.	0-5 & 10
FAIRCHILD SEMICONDUCTOR	0-5 & 10
FENWAL ELECTRONICS	0-10
FERRANTI LTD.	0-5
FERROXCUBE	0-6 & 10
FMC SEMICONDUCTOR INDUSTRIES, INC.	0-10
FMI, INC.	0-5, 6 & 10
FUJITSU LTD.	0-3, 10 & 15

MANUFACTURER'S NAME	PAGE NO.
GALILEO ELECTRO-OPTICS CORP.	0-4
GATES ENERGY PRODUCTS, INC.	0-11
G. E. (GENERAL ELECTRIC)	0-11
GENERAL INSTRUMENT CORP.	0-6, 9 & 11
GENERAL RADIO CO.	0-11
GENERAL SEMICONDUCTOR IND., INC.	0-6
GENERAL TELEPHONE & ELECTRIC	0-4, 11 & 15
GENERAL TRANSISTOR CORP.	0-11
GERMANIUM POWER DEVICES CORP.	0-6 & 11
GERMANY (STDS. COMPLIANCE)	0-10 & 17
GHZ DEVICES, INC.	0-5 & 11
GLENCO	0-4 & 11
GORDOS	0-6
GOULD	0-6
GR	0-11
GRAYHILL, INC.	0-11
GULTON	0-4 & 11
HAMLIN, INC.	0-3
HARRIS SEMICONDUCTOR	0-5 & 11
HART/ADVANCE	0-4 & 11
HEWLETT-PACKARD	0-11
HEYMAN MFG. CO. (HEYCO)	0-11
HIGH VOLTAGE DEVICES, INC.	0-6 & 11
HITACHI, LTD.	0-3
HI-TRON SEMICONDUCTOR CORP.	0-4 & 11
HOLLAND (STDS. COMPLIANCE)	0-12
HUBBELL	0-11
HUGHES CONNECTING DEVICES	0-5, 9 & 11
HUNTINGTON ELECTRIC, INC.	0-11
HYBRID SEMICONDUCTORS & ELECTRONIC, INC.	0-11
HYBRID SYSTEMS CORP.	0-5
ILC DATA DEVICES CORP.	0-9
ILLINOIS TOOL WORKS	0-11 & 14
INTECH/FMI, INC.	0-5, 6 & 10
INTEL CORP.	0-11
INTERNATIONAL DEVICES, INC.	0-3, 10 & 11
INTERNATIONAL ELECTRONICS	0-11
INTERNATIONAL RECTIFIER	0-5 & 11
INTERSIL	0-11
INTRONICS, INC.	0-3 & 18
IRC	0-4 & 11
ITT	0-4, 8 & 11
JAPAN (STDS. COMPLIANCE)	0-12
J. W. MILLER	0-13
KDI PYROFILM CORP.	0-3 & 14
KELVIN ASSOCIATES	0-6 & 12
KERTRON, INC.	0-4 & 12
KEY TRONIC	0-4 & 12
KINGS	0-6
KMC SEMICONDUCTORS	0-4, 8 & 12
KOOLTRONIC, INC.	0-4
KSC SEMICONDUCTOR CORP.	0-12
KSW ELECTRONICS, INC.	0-3 & 12
LANSDALE TRANSISTOR & ELEC., INC.	0-3 & 12
LEMO USA, INC.	0-3, 6 & 12

0

MFR LOGO REF LIST (INDEX)

MANUFACTURER'S NAME	PAGE NO.
LICON	0-12
LINEAR TECHNOLOGY, INC.	0-3 & 12
LITRONIX, INC.	0-12
LITTLEFUSE, INC.	0-12
LITTON SYSTEMS, INC.	0-5, 12 & 14
MAGNACRAFT	0-13
MALCO	0-5 & 12
MALLORY	0-3, 12 & 13 & 18
MARSHALL INDUSTRIES	0-4 & 13
MATSUBISHI ELECTRIC CORP.	0-6
MATSUO ELECTRONICS	0-5 & 12
MATSUSHITA ELECTRIC CORP.	0-6
McCOY ELECTRONICS CO.	0-8 & 13
MEMCOR ELECTRONIC COMPONENTS	0-5 & 10
MEPCO/ELECTRA, INC.	0-5 & 13
MERCURY ELECTRONIC CO.	0-4
METHODE ELECTRONICS, INC.	0-10
MICRO COMPONENTS CORP.	0-13
MICRODOT	0-5
MICRO ELECTRONICS, LTD.	0-4 & 17
MICRO NETWORKS CORP.	0-3 & 13
MICROPAC INDUSTRIES, INC.	0-5 & 12
MICROSEMICONDUCTOR CORP.	0-13
MICROSWITCH	0-13
MICROWAVE ASSOC.	0-4, 8 & 12 & 17
MICROWAVE DIODE CORP.	0-4 & 13
MICROWAVE SEMICONDUCTOR CORP.	0-13
MIDWEST MICROWAVE	0-12 & 17
MIL ELECTRONICS, INC.	0-13
MILLER ELECTRIC	0-13
3M (MINNESTOR MINING & MFG.)	0-12 & 15
MITEL SEMICONDUCTOR	0-3 & 12
MODULAR DEVICES, INC.	0-13
MOLEX, INC.	0-12 & 13
MONOLITHIC MEMORIES, INC.	0-5 & 13
MONSANTO	0-12
MOS TECHNOLOGY, INC.	0-13
MOSTEK CORP.	0-13
MOTOROLA, INC.	0-3, 6 & 12
MSI ELECTRONICS	0-13
MUCON	0-12
MULLARD LTD.	0-5 & 12
MURATA	0-9 & 12
NATEL ENGINEERING CO., INC.	0-13 & 17
NATIONAL COMPONENTS INDUSTRIES, INC.	0-13
NATIONAL SEMICONDUCTOR CORP.	0-5, 6 & 13
NATIONAL TRANSISTOR CORP.	0-4 & 13
NEC MICROCOMPUTERS, INC.	0-13
NEW JERSEY SEMICONDUCTOR PRODUCTS CO., INC.	0-13
NEWMARKET TRANSISTOR LTD.	0-13
NICHICON (AMERICA) CORP.	0-3 & 13
NIPPON ELECTRIC CO., LTD.	0-13
NORTH AMERICAN SEMICONDUCTOR CO.	0-4 & 13
NORWAY (STDS. COMPLIANCE)	0-13
NUCLEONIC PRODUCTS CO., INC.	0-3 & 13
NYTRONICS COMPONENTS GROUP, INC.	0-13 & 15

MANUFACTURER'S NAME	PAGE NO.
OAK ELECTRO/NETICS CORP.	0-4 & 11
OHMITE	0-6 & 13
OMNI SPECTRA, INC.	0-6 & 14
OPAMP LABS, INC.	0-4, 12 & 13
OPTICAL ELECTRONICS, INC.	0-14
PAKTRON	0-14
PAMOTOR	0-3
PARAMETRIC INDUSTRIES, INC.	0-4 & 14
PD & E, INC.	0-14
PETERSON RADIO	0-5 & 14
PHILCO RADIO TELEVISAO LTDA.	0-14
PHILIPS ELECTRONIC, LTD.	0-5 & 14
PHOTO-THERM	0-6
PITMO	0-3 & 14
PITTMAN CORP.	0-3 & 14
PLESSEY MICROSYSTEMS	0-3
PMI	0-6 & 14
POMONA ELECTRONICS	0-4 & 14
POWER MONOLITHICS, INC.	0-4
PPC PRODUCTS CORP.	0-4 & 14
PR CRYSTALS	0-5 & 14
PRECISION MONOLITHICS, INC.	0-6 & 14
Q.D.C. CORP.	0-6 & 14
RADIO CORP. OF AMERICA (RCA)	0-14 & 18
RADIO MATERIALS CO.	0-14
RAYCHEM	0-16
RAYTHEON	0-14
RCL	0-14
RELIABILITY, INC.	0-3 & 14
REPUBLIC ELECTRONIC CORP.	0-12
ROCKWELL INTERNATIONAL	0-3
RODAN INDUSTRIES, INC.	0-5, 12 & 14
R-OHM CORP.	0-14
ROTRON, INC.	0-5 & 14
RPC	0-14
R.T.C. LaRADIOTECHNIQUE-COMPELEC	0-14
SANGAMO ELECTRIC CO.	0-15
SANYO	0-15
SCHURTER AG	0-6 & 15
SCIENTIFIC COMPONENTS, INC.	0-15
SEALECTRO	0-5 & 15
SEMICOA	0-4 & 15
SEMICONDUCTOR CIRCUITS, INC.	0-4 & 15
SEMICONDUCTOR TECHNOLOGY, INC.	0-16
SEMICON 2000	0-5, 15 & 18
SEMI, INC.	0-5, 10 & 11, 15 & 17
SEMITRONICS CORP.	0-5 & 15
SEMITRON LTD.	0-4 & 15
SEMTECH CORP	0-6
SENSITRON SEMICONDUCTORS	0-14
SESCOSEM ITALIANA	0-4
SHALLCROSS RESISTOR PROD.	0-15, 16 & 18
SHINDENGEN ELECTRIC MFG. CO., INC.	0-3
SIEMENS CORP.	0-4, 9 & 15
SIGMA INSTRUMENTS, INC.	0-15
SIGNALITE	0-3 & 15

MANUFACTURER'S NAME	PAGE NO.
SIGNETICS CORP.	0-6 & 15
SILEC-SEMI-CONDUCTEURS	0-4 & 16
SILICON GENERAL, INC.	0-5 & 15
SILICONIX, INC.	0-6, 11 & 15
SILICON TRANSISTOR CORP.	0-12, 15 & 16
SOLID POWER CORP.	0-4 & 15
SOLID STATE DEVICES, INC.	0-4 & 16
SOLID STATE, INC.	0-3 & 15
SOLID STATE INDUSTRIES, INC.	0-3 & 15
SOLID STATE SCIENTIFIC, INC.	0-6 & 16
SOLID STATE SYSTEMS	0-5 & 16
SOLITRON DEVICES, INC.	0-15
SPACE POWER ELECTRONICS, INC.	0-3 & 15
SPECIALTY CONNECTOR CO., INC.	0-3 & 15
SPECTROL ELECTRONICS CORP.	0-16
SPRAGUE ELECTRIC CO.	0-3 & 18
STACKPOLE COMPONENTS CO.	0-5
STACO, INC.	0-3 & 15
STANDARD REFERENCE LABS., INC.	0-5
STEWART WARNER	0-16
S T SEMICON, INC.	0-6 & 16
SWEDEN (STDS. COMPLIANCE)	0-14
SWITCHCRAFT, INC.	0-6 & 15
SWITZERLAND (STDS. COMPLIANCE)	0-14
SYLVANIA OF GTE	0-4 & 15
SYNERTEK	0-6 & 15
SYNTAR INDUSTRIES, INC.	0-3 & 15
TAG SEMICONDUCTORS LTD.	0-4 & 16
TECCOR ELECTRONICS, INC.	0-6 & 16
TECHNICAL WIRE PRODUCTS, INC.	0-16
TECNETICS, INC.	0-16
TEKTRONIX, INC.	0-16
TELEDYNE SEMICONDUCTOR	0-6
TELEFUNKEN	0-8 & 16
TEPRO OF FLORIDA, INC.	0-16
TEXAS INSTRUMENTS, INC.	0-5, 12 & 16
TEXTOOL	0-16
THERMALLOY, INC.	0-16
THICK FILM SYSTEMS, INC.	0-16
THOMPSON - CSF	0-4
TOKYO SANYO ELEC. CO., LTD.	0-15
TRANSISTOR INTERNATIONAL CORP.	0-5 & 16
TRANSISTOR SPECIALTYS, INC.	0-4 & 16
TRANSMAGNETICS, INC.	0-16
TRW, INC.	0-4, 9 & 11 & 16
ULTRONIX, INC.	0-5 & 17
UNDERWRITERS LABORATORIES, INC.	0-14 & 17
UNIFORM TUBE	0-3 & 17
UNION CARBIDE CORP.	0-10, 12 & 17
UNI-TRAN SEMICONDUCTOR CORP.	0-17
UNITRODE	0-5 & 17
UPI SEMICONDUCTOR	0-4 & 17
VALVO GmbH	0-3 & 17
VARADYNE	0-6 & 17
VARIAN ASSOCIATES	0-3 & 17
VARO SEMICONDUCTORS, INC.	0-3
VICTOREEN	0-6 & 17
VIKING	0-17

MFR LOGO REF LIST (INDEX)

MANUFACTURER'S NAME	PAGE NO.
VITRAMON, INC.	0-17
WALBERN DEVICES, INC.	0-4 & 17
WARD LEONARD	0-13 & 17
WATKINS-JOHNSON CO.	0-17
WESTERN DIGITAL CORP.	0-4
WESTINGHOUSE BRAKE & SIGNAL CO., LTD.	0-3 & 17
WESTINGHOUSE ELECTRIC CORP.	0-3 & 17
ZELTEX, INC.	0-17
ZILOG	0-5 & 17

NOTES

ENGINEERING SERVICES "RELIABILITY GROUPS"

COMPONENT RELIABILITY ENGINEERING

Component Reliability Engineering has been formed specifically to address component reliability problems. This group provides facilities procedures to measure and assure the reliability of semiconductor components procured for use in Tektronix products. Some of the techniques utilized to provide this function are:

1. Evaluating reliability of components for the purpose of selecting vendor, part, or process on the basis of reliability.
2. Determining test procedures to assure the reliability of parts before accepted and warehoused; setting acceptable reliability levels.
3. Determining optimum cost-effective component screening procedures to meet a given reliability goal.
4. Performing failure analysis on failed components returned from field or from instrument reliability tests.
5. Providing generic component reliability data based on results of reliability tests.

For specific information, contact Ron Schwartz, ext. 1605.

RELIABILITY INFORMATION SERVICES (Now in the Corporate Mkts. & Service Group, 53-114)

Information on failures occurring during manufacture and field use is available by request. Regularly scheduled reports are intended to give appropriate persons insight to trends in reliability. The data base is maintained on a moving year basis. History data is available from 1970 to date.

Information may be requested by calling Brenda Humes, 8004 MR. A "menu" of data displays and description of the data base is available also by calling Brenda Humes, ext. 8004MR.

Our group, at this printing, consists of:

Clair Gruver, Manager 624-8006
Brenda Humes, Production Coordinator, 624-8004
Rosalyn Neuberger, Project Leader, 624-8007
Jim Hosford, Documentation, 624-8012
Jerry Kryszek, Information Analyst, 624-8907
Jim Blohm, Information Analyst, 624-8907
Mel Christensen, Programming, 624-8003
Judy Schonhard, Programming, 624-8007
Mary Sells, Clerk, 624-8012

Test Lab:

Warren Collier, Manager, Ext 5298
Jack Stoll, Corp. Rel. Engineering, Ext 5298
Tom Louie, Eng. Assistant, Ext 5527

GLOSSARY OF RELIABILITY TERMS

ACCELERATED TEST - A test in which the applied stress level is chosen to exceed that stated in the reference conditions in order to shorten the time required to observe the stress response of the item, or magnify the response in a given time. To be valid, must not alter the basic modes and mechanisms of failure and their relative prevalence in a use situation. (IEC 271)

BURN-IN SCREEN - Performed for the purpose of eliminating marginal devices, those with inherent defects or defects resulting from manufacturing aberrations which are evidenced as time and stress dependent failures. Burn-in is usually performed by applying maximum rated, operating conditions for a specified time period. (MIL-STD-883A, method 1015)

ELECTRICAL TESTS AT ELEVATED TEMPERATURE - Usually a DC electrical and full functional test performed at a temperature above ambient (Typically 70°C or maximum rated operating temperature for IC's, and 125°C for transistors tested at Tektronix on the hot track).

FAILURE - The inability of an item to perform within previously specified limits. (MIL-STD-790C)

FAILURE ACTIVATING CAUSE - The stresses/forces, such as shock or vibration, which induce or activate a failure mechanism. (MIL-STD-790C)

FAILURE ANALYSIS - The process of examining parts to determine the cause of variations of performance characteristics outside of previously established limits with the end result that failure modes, failure mechanisms and failure activating causes will be identified. (MIL-STD-790C)

FAILURE MECHANISM - The physical process by which the degradation proceeded to the point of failure, identifying quality defects (including the original defect which initiated the device failure), internal, structural, or electrical weaknesses and, where applicable, the nature of externally applied stresses which led to failure. (MIL-STD-883A)

FAILURE MODE - The cause for rejection of any failed device as defined in terms of the specific electrical/physical requirement which it failed to meet (MIL-STD-883A)

FUNCTIONAL TESTS - Defined as go, no-go tests which sequentially exercise a function (truth) table or in which the device is operated as a part of an external circuit and circuit operation is tested. (MIL-STD-883A)

HIGH TEMPERATURE REVERSE BIAS - (HTRB) - A reverse bias, less than breakdown voltage, is applied to one or both transistor junctions at elevated temperature to promote infant failures.

HIGH TEMPERATURE STORAGE (STABILIZATION BAKE) - The purpose of this test is to determine the effect on micro-electronic devices of storage at elevated temperature. This test is primarily used for device stabilization and the detection of parameter drift. It also is useful in accelerating temperature dependent failure mechanisms such as those resulting from chemical reaction or diffusion. (MIL-STD-883A, Method 1008)

INTERMITTENT LIFE (OR POWER CYCLING) - Performed for the purpose of determining a representative failure rate for micro-electronic devices or demonstrating quality or reliability of devices subjected to the specified conditions. It is intended for applications where the devices are exposed to cyclic variations in electrical stresses and power consumption between the "on" and "off" condition and resultant cyclic variations in device and case temperature. The test can be performed under various conditions ranging from DC reverse bias to operation under high power conditions. (MIL-STD-883A, Method 1006)

OBSERVED FAILURE RATE - For a stated period in the life of an item, the ratio of the total number of failures in a sample to the cumulative observed time on that sample...to be associated with particular and stated time intervals and with stated conditions (IEC 271)

POWER CYCLING - See intermittent life.

PRECONDITIONING - The application of stress to a group of components which is done prior to screening (100% testing). This treatment is intended to promote the failure of intrinsically weak devices so they can be detected by screening.

QUALITY - The degree of conformance to applicable specifications and workmanship standards at the time of the quality inspection, OR The percentage of defective units (either dead-on-arrival or out-of-spec) furnished by the supplier to the user.

RELIABILITY - The probability of a device performing its purpose adequately for the period of time intended under the specified operating conditions.

RELIABILITY ASSURANCE - The management and technical integration of the reliability activities essential in maintaining reliability achievements, including design, production and product assurance. (MIL-STD-790C)

SAMPLE - A random selection of units from a lot for the purpose of evaluating the characteristics or acceptability of the lot.

SCREENING - A test, or combination of tests, (performed on 100% of a group of parts) intended to remove unsatisfactory items or those likely to exhibit early failures. (IEC 271)

STABILIZATION BAKE - See high temperature storage.

STRESS - Voltage, power, temperature, or thermal environmental conditions during component testing or usage which affect the failure rate, and hence the reliability of the parts.

TEMPERATURE CYCLING - This test is conducted to determine the resistance of the part to exposures at extremes of high and low temperatures. Permanent changes in operating characteristics and physical damage result from variations in the physical properties and dimensions during test. This test is often used to screen for devices with weak mechanical properties. (MIL-STD-883A, Method 1010)

THERMAL SHOCK - The purpose of this test is to determine the resistance of the device to sudden, extreme changes in temperature. It is useful for evaluating mismatches in thermal time constants and expansion coefficient between various device materials. (MIL-STD-883A, Method 1011)

0

RELIABILITY and HEAT

The single most significant factor affecting reliability is heat. We've proven this in the Reliability Lab and field failure statistics also support this conclusion. Our hottest boxes have the worst reliability.

Below 40 mW/cu in

Without an in-depth investigation, I offer the following observations: One figure of merit to consider with the problems of heat build-up is power/unit volume. Assuming even distribution throughout the box, and power below 40 mW/cu.in, overall heat will probably not be a problem.

Hot spots

Of course, localized heat concentrations should be avoided. For example, we recently found electrolytic capacitors between power resistors on circuit boards; this is just asking for trouble. The power dissipated by the resistors was heating the caps potentially boiling away the electrolyte.

40 to 50 mW/cu in

When power is in the region of 40 to 50 mW/cu.in heat may be a problem. If heat-generating components are on heat sinks external to the instrument, as in the 561B or 7704A, then the dissipation within the box is probably below 40 mW/cu.in and thus not likely to be a problem. On the other hand if all that heat is within the box, as in the 432, then problems are likely.

Above 50 mW/cu in

With more than 50 mW/cu.in a fan (or some other deliberate means of expelling the heat) is required.

Cabinet shape

The shape of the box modifies these generalizations, though. For example, a 1 cubic foot box one foot on each edge has 6 square feet of surface area for dissipating heat. If the shape is .5 x 2 x 1, then the surface area increases to 7 square feet, increasing radiating capacity.

(Heat radiation will usually be directly proportional to surface area. We assumed that within the box heat generation and distribution is homogeneous.)

HEAT ANALYSIS

Several heat analysis computer programs are available on the Tek CYBER System. These programs were intended for use by mechanical and electrical engineers in the early stages of design of an instrument. Among these programs is a program to analyze the thermal performance of a heat sink, a program to help predict the temperature vise of an instrument cooled by a fan, and a program to compute the temperature vise in a cabinet cooled by natural convection through holes in its case.

For information regarding the library of thermal analysis programs, contact Gordon Ellison, x 7887.

MTBF

(MEAN TIME BETWEEN FAILURE)

Attitude policy

Tektronix' intent is to supply our customers with products and services of superior quality, value, and performance. Our products represent a technical achievement which offers the highest performance consistent with value and quality. The "reliability" of our equipment is part of its quality and value.

Reliability is often misinterpreted —

Reliability is a term which is used frequently, but ambiguously. In relation to electronic equipment, it is the ability of the device to do the job for which it was designed without breaking down for a given period of time.

Though this sounds simple, reliability information has sometimes led to erroneous conclusions, since there is no standard interpretation of terms within the electronics industry.

The most basic disagreement is "what constitutes a failure." Is failure any deviation from advertised specifications or does it mean "catastrophic?" One interpretation allows for periodic calibration.

Consistent with our usual conservative approach Tektronix considers a failure or breakdown as any deviation from advertised specifications. It does not have to be catastrophic in order to count. No adjustments or repairs are performed during tests except after failure.

It is easy to see that the failure determination method should always be considered. With any deviation from specs being a failure, how complete and how tight an instrument's specification is has a profound influence on the reliability number.

Past performance: best indicator —

Tektronix believes the best indicator of a product's reliability is the past performance of the product's manufacturer. Our products and services are regarded as the standard of the industry; equipment reliability is part of this standard.

Quantitative measurements required

The oscilloscope is utilized in all phases of military and space electronics and nearly always forms an integral part of weapons and space systems. The nature of these applications is such that the reliability is of vital importance.

Contractors must estimate reliability, so failure data is now included in specifications for many systems. This in turn requires the contractor to specify reliability for sub-contractors.

As a result of this chain, we have received from government and government contractors an increasing number of requests for a quantitative measurement of reliability for our equipment. But, reliability, like quality, is difficult to describe.

Most of the methods used to quantify reliability result in numbers called Mean Time Between Failure (MTBF). This mean can best be described as the average time between failure. Since it is an average, it must be understood that the MTBF is not a guaranteed period of failure-free operation.

The MTBF number can be used to define another term: "probability of survival" (P_s). P_s is derived from the exponential equation:

$$P_s = e^{\frac{-t}{MTBF}}$$

Thus, the probability of survival for a period equal to the MTBF becomes $1/e = 37\%$. This shows that there is a 63% possibility of a failure during the period equal to the MTBF.

Uses for MTBF numbers

MTBF numbers are used for planning. They are used to estimate the probability of failure-free operation for a fixed period of time, to estimate the number of spares required to insure operation of a number of instruments over a length of time, and to estimate the manpower requirements to maintain the equipment.

Maintainability

Customers are starting to request maintainability data on specific instruments. MIL-T-28800A worked out by Tek, H-P, Fluke and others calls out maintainability.

Maintainability is the probability that a needed maintenance will be accomplished in time (t): The mean-time-to-repair (MTTR) can be obtained for all the instruments which have been tested.

The probability density function most generally follows a log-normal distribution. These figures are for active repair time only and does not include preventative maintenance or scheduled calibration periods. Correlation of factory MTTR's versus field MTTR's should also be considered.

How MTBF numbers are derived

Several different methods of deriving MTBF numbers exist: maintenance records, parts population analysis, part application stress analysis, and equipment testing in accordance with accepted procedures.

A maintenance record approach is seldom practical because of the long time periods required to generate adequate data under actual use conditions. Also, varied "normal" use conditions make it impractical to relate the reliability data obtained to other use conditions.

The parts population analysis method takes into consideration the typical failure rate for each type of component. These failure rates are combined by formula to yield a predicted MTBF for the equipment.

The parts application stress analysis method takes into account component loading, but is only slightly more accurate than the parts population approach.

The more meaningful method for determining MTBF is equipment testing, which is done in accordance with accepted procedure, as outlined in MIL-T-28800A and MIL-STD-781B. (This procedure supercedes that developed by AGREE.)

Tektronix uses the latter method except for some products, particularly the older instruments, where tested MTBF data may not be available. For these instruments, predicted MTBF derived from parts population analysis is usually available.

Confidence levels

Test data is usually limited in quantity. Resultant estimates of MTBF therefore contain inherent sampling errors, and repetition of the test will yield variations of results verifying these errors. Knowledge of the existence of an error moderates the confidence one can have in the results.

RELIABILITY NOTES

COMPONENT RELIABILITY DATA: CAUTION!

The Component reliability data listed in this catalog is compiled from Tek field failure data. As such, they represent historical information based on many different instrument applications and environments. Using a part with a particular rate does not guarantee that the part will exhibit that rate in the circuit. This is due to the dependence of the failure rate on application stress (voltage, current, temperature, mechanical stresses) and other factors which may determine the part failure rate to an even greater extent that application stress. Some of these factors are:

1. Dependence on typical or unspecified parameters for proper circuit operation.
2. Circuit characterization which did not anticipate component parameter distribution or account for variations in performances at high or low temperatures.
3. Effects of thermomechanical cycling stress, such as in a sweep circuit.
4. Safe operating area-second breakdown phenomena.
5. Susceptibility to burn-out by transients.
6. User-induced failure.
7. Poor maintenance techniques.

One might ask: Of what value is this reliability data: It is a comparative indicator of Tek's experience with that component. Parts having experience failure rates greatly different from the generic rates should trigger some questions about their use in new applications. For example, is there evidence the part has been misapplied or occasionally suffered abuse? Have the suppliers had difficulty making the part? Does the new application stress the parts to the same degree as earlier applications? Component Engineering or Component Reliability Engineering may assist in answering such questions. The value of the data is as a flag indicating we have experienced some kind of reliability problem with that part in the past.

HOW FAILURE RATES DEPEND ON APPLIED STRESS

SEMICONDUCTORS

Models have been developed to represent, in a heuristic manner, the dependence of semiconductor failure rates on voltage and temperature stress. These models are based on the Arrhenius equation which for a physical process, describes the process rate dependence on temperature:

$$R = R_o \exp - \frac{E_A}{kT_K}$$

where R = reaction rate

R_o = a constant

E_A = activation energy in eV

k = Boltzmann's constant (8.6×10^{-5} eV/K)

T_K = absolute temp. in Kelvin

Thus, the acceleration factor (AF) for the failure rate is:

$$AF = \exp \frac{E_A}{k} \left(\frac{1}{T_1} - \frac{1}{T_2} \right)$$

Where T_1 is the test temperature (or reference temperature) and T_2 is the desired temperature in degrees Kelvin. Figure 1 shows this factor normalized to the failure rate at 60°C junction temperature. Also shown is the effect of voltage stress (MIL-HDBK-217B model for bipolar transistors only). Voltage stress ratio is defined as the ratio of operating V_{CE} to rated V_{CE}.

An enlarged copy of Figure 1 appears in the Transistor section of this catalog.

PASSIVE COMPONENTS

Information on passive component failure rates dependence on applied stress is contained in the "Device Ratings for Tektronix Design" publication previously cited.

†† CATALOG RELIABILITY CODES

USAGE/YR	CODE
≥10	1
≥100	2
≥1 000	3
≥10 000	4
≥100 000	5
≥1 000 000	6
≥10 000 000	7

FAILURE FREQ	CODE		%/YR (median)
1/100 000	A	=	.001
1/50 000	B	=	.002
1/20 000	C	=	.005
1/10 000	D	=	.01
1/5 000	E	=	.02
1/2 000	F	=	.05
1/1 000	G	=	.1
1/500	H	=	.2
1/200	I	=	.5
1/100	J	=	1.0 +

T_J, junction temperature (reciprocal temperature $1000/T_K$)

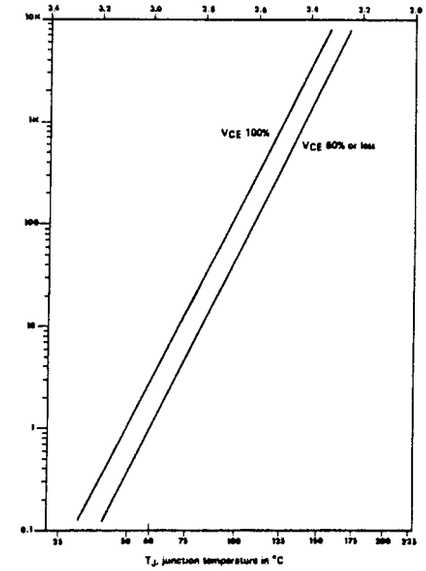

Figure 1 - Failure rate acceleration factors normalized to a failure rate of 1 at 60°C junction temperature. Effects of transistor voltage stress are indicated by the two lines for 100% and 60% voltage stress levels. For microcircuit acceleration factors, use the 60% line.

IN ADDITION TO THE GENERIC FAILURE RATE DATA LISTED HERE, MANY OF THE SECTIONS OF THIS CATALOG LIST THE EXPERIENCED FAILURE RATE DATA FOR THE INDIVIDUAL PARTS.

	%/Warranty Yr. Tek Experience
Microcircuits, Purchased	
Linear	.06
Digital	.02
MOS/LSI/Memory	.03
Transistors, Bipolar	
Power	.05
Small Signal - PNP/NPN	.02
Transistors, JFET and MOSFET	.08
SCR/Triac/Unijunction	.08
Diodes	
Tunnel, Shockley, VVC, Snap	.05
Zener	.01
Power Rectifier	.02
Signal Switching	.002
Lamps (filament)	.04
Lamps, LED	.04
Resistors	
Carbon Composition	.002
Networks	.003
Wirewound	.004
Metal Film	.005
Variable (Panel)	.03
Variable (Trimmer)	.009
Capacitors	
Ceramic, Low Voltage	.003
Ceramic, Hi-Voltage	.03
Mica	.0007
Plastic-Film	.008
Aluminum Electrolytic	.02
Tantalum Electrolytic	.01
Variable, Ceramic	.004
Variable, Air	.004

RELIABILITY NOTES

MTBF (continued)

The degree of confidence applicable to test data (of the assumed constant failure rate variety) is a function of the total test time, as measured in multiples of the resulting MTBF.

For contractural commitments, instruments are run for a cumulative number of operating hours divided by the acceptable MTBF for the most generally accepted 90% lower confidence level.

The instruments must operate for a given period of time with no more than a certain number of failures. If this number of failures is exceeded, the instruments do not meet the MTBF requirements. Two alternatives prevail: lower the MTBF number or redo the test with possible circuit or part improvements.

The 90% lower confidence level has two perspectives. One is that the vendor has a confidence that his product will have a greater than 90 percent chance of meeting or exceeding the quoted 90% level. The other viewpoint is that a customer has a 10% chance of having his instrument fail more often than the MTBF indicates.

An example of the relationship of reliability data follows. Suppose four instruments were run for 5000 hours each, or a total of 20k operating hours, and 37 failures occurred. The exhibited MTBF would be 540 hours. Chi-square tables indicate that the 90% lower confidence limit MTBF would be 445 hours.

The reliability or probability of success for a 40-hour work week is:

$$P_s = e^{-t/MTBF} = e^{-40/445} = 91.4\%$$

In other words, there is an 8.6% chance an instrument will fail during the 40-hour work week.

Repeat requests for MTBF numbers

If a customer has received MTBF information on a given product, and he has a requirement for the same data on the same product at a later date, it will be necessary to re-inquire. We are regularly testing our equipment. The latest data provides the most accurate number for current production instruments. The reliability of a product, typically, improves over its lifetime.

System MTBF figures

We should note here that MTBF's for equipment to be combined in a system can be determined by different methods and still be combined to get a total MTBF for a rack or system. Should a customer have a calculated MTBF figure for most of his system, there is no problem combining it with tested MTBF data. The formula for combination is:

$$\frac{1}{MTBF_{system}} = \frac{1}{MTBF_A} + \frac{1}{MTBF_B} + \ldots \frac{1}{MTBF_N}$$

SUMMARY:

Tektronix's intent is to give the customer the most for his instrument dollar. Part of this commitment is to produce reliable equipment and promote reliability through service.

The customer should view our past performance as the number one indicator of our product's reliability.

Should a customer require an MTBF number to meet a contractual commitment, Tektronix will supply the best number available. Test results and predicted MTBF's based on part populations--(if tests have been completed).

MTBF numbers are useful for reliability planning.

This information is of a confidential nature, so customers should be encouraged to live with past performance, the number one indicator, unless there is a contractural requirement. The Field Engineer is responsible for the security of this information.

Procedural Policy

MTBF figures for individual Tektronix products may be obtained, if available, by contacting the appropriate Marketing Manager. If the Field Engineer decides to give an MTBF figure at the 90% lower confidence limit to a customer in writing rather than verbally, the form illustrated on Page R-3.6 should be used to insure that customers have a consistent and comprehensive explanation of figures after the Field Engineer has left.

Some customers will be content with MTBF prediction of an instrument derived by a parts population count. This method uses MIL-R-26474 or the R.A.D.C. failure rate equation. This equation assigns a basic failure rate to each type of component. The number of components is then multiplied by this failure rate to give a sub-equation total. These sub-totals are then added algebraically to yield an instrument bit failure rate. The reciprocal of this number is then taken to arrive at the predicted MTBF. No confidence levels are implied with this figure. The modes of failure are of catastrophic nature only, i.e., no internal adjustment failures are considered.

Any MTBF contractural agreement between Tektronix and the customer should be negotiated as a modified product.

The following MTBF data applies at this time. We are regularly testing so we encourage you to re-inquire should you need this same information at a later date.

_____No. of _____were tested in accordance with accelerated life test for _____hours each, a total test time of _____hours.

The results of these tests show an MTBF of _____hours. The lower 90% confidence limit is _____hours.

We believe that MTBF figures derived from accelerated test methods are the best quantitative indicators of equipment reliability. We also believe that your prior experience with TEKTRONIX equipment is a better indicator of reliability than is the MTBF number. Among MTBF methods, actual testing bears more relationship to the quality of design and workmanship than does either parts population analysis or parts application stress analysis methods.

The statistical nature of MTBF information makes it impossible to be sure that any given instrument or group of instruments will exhibit reliability identical to the figures quoted above. Therefore, we cannot warrant our MTBF number as we do a catalog specification. Exceptions to this will be made upon conditional contractural MTBF qualification testing for MTBF.

The information contained herein was obtained for our internal engineering use and is considered confidential by TEKTRONIX. We will appreciate your treating it with discretion.

For additional information, contact Jack Stoll at ext. 5298.

DESIGNING FOR RELIABILITY

In designing for reliability, the designer has two powerful tools at his disposal — one is reliability analysis applied at all stages of the design, the other is the derating of components.

Reliability analysis is the calculation of the system's or equipment's reliability from the failure rates of the components used. These calculations are done by Jack Stoll in our Reliability Lab. By properly applying reliability analysis, the design can be broken up into modules, assemblies, units, or subsystems, and reliability apportionments can be made to these so that the over-all reliability target is met.

When some components are inherently not reliable enough, derating techniques must be used. The derating of components in reliability design is a standard technique — it means operating components at only one-half or even less of their rated values of voltage, wattage, temperature, etc. Spectacular increases in component and equipment reliability can be achieved in this way. Sometimes only one of these stress parameters needs to be reduced to bring the component failure rate down to the required level. But there are also instances where even extreme derating does not help, and the component failure rate is still too high. Redundancy techniques must then be used, in the form of parallel or stand-by components. However, redundancy increases size, weight, and possibly, maintenance as well. Therefore, every effort should be made to avoid redundancy if single components of high reliability can be obtained and when derating techniques can be used.

Because the reliability of electronic systems is mostly a series reliability with very little or no redundancy used, the derating of components becomes an absolute must for the achievement of high reliabilities. And because the reliability of a series system is determined by the sum of the component failure rates, design simplification is another important tool for reliable design. Simplification means a reduction of the number of components is a sound approach to system reliability. Thus, the art of reliability design does not consist of designing highly sophisticated systems but rather of designing them to be simple as possible.

The designer has certain tools for reliable design at his disposal. He can

1. Simplify the design to a minimum of parts without degrading performance.
2. Insure that design reliability reviews are performed at the preliminary stage and at the final stage of design. This is being done by our Application Engineers.
3. Apply component derating techniques to the best possible advantage to reduce failure rates and to increase component life.
4. Reduce the operating temperature of components in the equipment by providing heat sinks, appropriate packaging, and if necessary, good cooling.
5. Use the Reliability Engineering Department to specify reliability and establish burn-in requirements.
6. Use the Reliability Lab for instrument testing.

The specification of component reliabilities, component burn-in requirements, and instrument testing is necessary to insure that the reliability testing is necessary to insure that the reliability achieved by the design will be maintained in production and will not be degraded by the infiltration of substandard specimens into the equipment or by poor assembly tecnhiques which cause early failures. These requirements will alert incoming inspection, quality control, and manufacturing engineering to do their part in the over-all reliability control program.

RELIABILITY NOTES

MIL-HDBK-217B

Considerations for reliable design

Reliability Prediction of Electronic Equipment

MIL-217B is a handbook oriented toward the reliability prediction of military electronic equipment. The handbook provides two methods of reliability prediction:

1. Parts stress analysis, and
2. Parts count.

Though the authors of the handbook disclaim its use as a complete guide to reliability engineering, the handbook, by its very nature provides a great deal of insight and information about the effects of various stresses on parts failure.

This information can give a designer the feel for the trade-offs involved in increasing the reliability of a design.

As for actual numbers of failures being cranked out of this handbook, don't count on it. The numbers do not necessarily relate to Tek instruments because Tek does not, as a rule, purchase military grade components.

The handbook makes some provisions for commercial grade components in some parts categories. However, plastic transistors, for example, are not included because the military does not permit their use in military systems at this time.

The usefulness and relevance of this handbook to Tektronix lies in the relationships between the types of stress and the failures. It is with this in mind that the following summary of the handbook was written.

Please note —

Failure rates and models given in MIL-HDBK-217B are averages. Failures are assumed to be regular and continuous with time.

Any part improperly derated or misapplied is considered abused by this handbook so the failure models and data will not apply for that component.

---

parts stress analysis

General model

Most components, other than microcircuits, follow the model:

$$\lambda_p = \lambda_b (\pi_1 \times \pi_2 \times \pi_3 \times \ldots \times \pi_x)$$

where

λ_p is the part failure rate

λ_b is the base failure rate, usually expressed by a model relating to electrical and thermal stress factors.

$\pi_1, \pi_2, \pi_3 \ldots \pi_x$ are constants which modify the base failure rate according to various parameters which affect part reliability. Some of these factors are:

π_E Environmental π_Q Part Quality	used in all parts categories
π_A Application π_C Complexity π_{s2} Voltage Stress etc.	used in discrete semiconductor models

Each part class or type has specific pi (π) factors.

Microcircuit model

The model for microcircuits is as follows:

$$\lambda_p = \pi_L \pi_Q (C_1 \pi_T + C_2 \pi_E)$$

where

λ_p is the microcircuit part failure rate

π_L is the device learning rate (for example, π_L may be equal to ten for the first six months of production of a new device. An established part would have a π_L of one.)

π_Q is the quality factor (i.e., commercial, JAN, etc.)

π_T is the temperature acceleration factor

π_E is the environmental factor

C_1, C_2 are circuit complexity factors (dependent on the number of gates, transistors, or bits and on the device type)

A model for hybrid devices, which I will not include in this article, is also outlined in MIL-217B.

---

parts count

This method of reliability prediction uses the model: $\lambda_p = \lambda_G \times \pi_Q$

where

λ_p is the part failure rate

λ_G is the generic (or device family average) failure rate for a specified π_E

π_Q is the quality factor

RELIABILITY NOTES

0

equipment failure rate

The total failure rate of an instrument, whether predicted by parts stress analysis or parts count, is:

$$\lambda_{equip} = \lambda_{p_1} + \lambda_{p_2} + \lambda_{p_3} + \ldots \lambda_{pT}$$

where

λ_{equip} is the equipment failure rate (usually expressed as failures/10^6 hours)

$\lambda_{p_1}, \lambda_{p_2}, \lambda_{p_3}, \ldots \lambda_{pT}$ is the individual failure rates of all components

Mean Time Between Failure or MTBF = $(\lambda_{equip})^{-1}$

environmental factors

The environment the instrument is to be used in has quite an effect on the failure rates experienced in the field. There are primarily three environmental factors (π_E) that apply to Tektronix products:

Environment	Symbol π_E	Nominal Environmental Conditions
Ground, benign	G_B	Nearly zero environmental stress with optimum engineering operation and maintenance.
Ground, fixed	G_F	Conditions less than ideal to include installation in permanent racks with adequate cooling air, maintenance by military personnel and possible installation in unheated buildings.
Ground, mobile (and portable)	G_M	Conditions more severe than those for G_F, mostly vibration and shock. Cooling air supply may also be more limited, and maintenance less uniform.

DISCRETE SEMICONDUCTORS

Generic failure rates

Discrete semiconductors (non-plastic encapsulated) are normalized to an NPN silicon transistor with $\pi_E = G_B$

Discrete Semiconductors	G_B	G_F	G_M
TRANSISTORS (JAN parts)			
Si NPN	1.0	x 5	x 25
Si PNP	1.5	x 5	x 25
Ge PNP	1.5	x 5	x 25
Ge NPN	4.3	x 5	x 25
FET	2.7	x 5	x 25
Unijunction	8.9	x 5	x 25
DIODES (JAN parts)			
Si General Purpose	0.6	x 5	x 25
Ge General Purpose	0.8	x 5	x 25
Zener and Avalanche	1.0	x 5	x 25
Thyristor	0.8	x 5	x 25
Si microwave detector	6.8	x 10	x 50
Ge microwave detector	15.0	x 10*	x 50*
Si microwave mixer	8.9	x 10	x 50
Ge microwave mixer	26.0	x 10*	x 50*
Varactor, Step Recovery, Tunnel	8.6	x 5	x 25

* Valid only for electrical stress, S ≥ 0.3 as defined in MIL-HDBK-217B.

π_A Application Factors

Transistors		Diodes, general purpose	
Linear	1	Small signal ≤ 500 mA	1
Logic switch	x 0.5	Logic Switch	x 0.6
High frequency (> 400 MHz)	x 3.33	Power Rectifier > 500 mA	x 1.5
		HV Stacks, V_{max} > 600v	x 2.5/junction

π_{s2} Voltage Stress Factors

Transistors

$$s_2 = \frac{\text{applied } (V_{CE})}{\text{rated } (V_{CEO})} \times 100\%$$

Failures increase by approximately 1.34 times for each 10% increment of s_2 above s_2 = 20%.

Diodes, general purpose

$$s_2 = \frac{\text{applied voltage}}{\text{rated voltage}} \times 100\%$$

Failure rate is constant for s_2 ≤ 60%. Failures increase approximately 1.1 times for each 10% increment of s_2 above 60%.

RELIABILITY NOTES

MIL-HDBK-217B

THERMAL CONSIDERATIONS

Specific data on temperature influence on failure rates can be obtained by consulting MIL-HDBK - 217B.

A thermal consideration not covered by MIL-217B is encountered in plastic transistors. At the glass transition temperature (around 150 to 170°C for most manufacturers), the plastic encapsulant material takes on a higher thermal expansion coeffecient. This produces additional stresses that are not noticably present at lower temperatures.

For this reason, it is not advisable to approach 150°C junction temperature in worst-case operating conditions, even though manufacturers derate to zero at 150°C.

MICROCIRCUITS

Generic failure rates

Microcircuit (average of commercial grade parts) failure rates are normalized to standard TTL SSI at G_B.

Microcircuits	G_B	G_F	G_M
Standard TTL			
1 to 20 gates*	1.0	x 4	x 13
21 to 50 gates	2.9	x 3	x 8
51 to 100 gates	4.6	x 3	x 7
101 to 500 gates	20.0	x 2.5	x 6
greater than 500 gates	314	x 2.5	x 5.5
Memories ≤ 1k bits	17	x 2.5	x 5
to 4k bits	37	x 2.5	x 5.5
to 8k bits	63	x 2.5	x 5.5
Bipolar beam lead and ECL			
1 to 20 gates*	1.4	x 5	x 12
21 to 50 gates	6.9	x 4	x 7
51 to 100 gates	11	x 4	x 7
101 to 500 gates	51	x 4	x 6.5
greater than 500 gates	857	x 4	x 6
Bipolar and MOS Linear			
greater than 32 transistors	1.7	x 4.5	x 12.5
33 to 100 transistors	3.7	x 4.5	x 12.5
MOS Memories			
greater than 1k bits	46	x 3.5	x 6
to 4k bits	100	x 4	x 6
to 8k bits	171	x 4	x 6

* Assume 1 gate is equivalent to 4 transistors

A COMPUTER PROGRAM FOR INSTRUMENT RELIABILITY PREDICTION BY PARTS COUNT IS AVAILABLE ON THE CYBER SYSTEM BY ENTERING THE FOLLOWING COMMANDS:

RELY

THIS PROGRAM USES MIL-HDBK-217B AND TEK EXPERIENCE FAILURE RATES AND CAN COMPUTE MTBF FIGURES WHEN GIVEN THE NUMBER OF PARTS IN EACH PART CATEGORY. ALSO INCLUDED IS A FEATURE TO DETERMINE TEMPERATURE EFFECT ON RELIABILITY. FOR ADDITIONAL USE INFORMATION, CALL LARRY MENEGHIN, EXT. 7283.

APPLICATION NOTES

Avoid using selected components if possible

Using existing part-numbered components for new design has obvious advantages. These include:

1. generally lower cost due to increased volume
2. availability
3. known component history (failure rates, vendor quality, etc.)

When circuit design calls for components with *parameter values different* than those available, one alternative has been for Component Preconditioning and Test at Tektronix to select an existing part-numbered component for a particular parameter value. A typical example is the selection of a 151-xxxx-00 transistor for a beta between 75 and 80.

As shown in Figure 1, some 151-xxxx-00 transistors are sent to Component Selection and the rest go directly to production areas using the part. The number of transistors sent to Component Selection depends on:

1. the number of selected parts needed, and
2. the projected yield (i.e. how many devices will have a beta between 75 and 80).

Transistors with the desired beta are given a 153-xxxx-00 part number and shipped to the appropriate production lines.

All other transistors are sent to 151-xxxx-00 using areas via the warehouse in bags marked 151-xxxx-89. The -89 suffix is marked on the containers to avoid screening those devices for beta again and again.

These 151-xxxx-00 transistors in -89 bags are NOT rejects but are in fact of higher quality than the parts sent directly to production areas. This is because the opens, shorts and other defective parts are automatically removed during the selection process.

Some production areas have returned devices in bags marked -89 to the warehouse as rejects, failing to understand this selection process. However, by far the worst misconception about selected parts has to do with the associated cost.

Figure 2 includes relevant usage and price figures for a typical component. Specific prices and part numbers are withheld to protect the innocent.

Suppose that 1k 153-xxxx-00 selected transistors are needed per period and the expected selection yield is 50%. Therefore, 2k devices must be screened by Component Selection to meet the demand.

In screening the 2k 151-xxxx-00's, Component Selection entails a labor charge of around 3¢ per 153-xxxx-00 device. (Labor charges run anywhere from 2 to 5¢ for each selected device.) The total cost of the selected part in this example is 28¢.

If all goes well, the "fallout" devices are routed back to the warehouse as -89's and used in production lines at 25¢ each. But you guessed it — "If" is a big word.

Figure 3 shows what generally happens two or three years after the selection process for a component was initiated. Notice the following changes:

1. The selected part has become popular and its usage has increased from 1k devices per period to 5k devices/period.
2. The selection yield has dropped from 50% to 10% because of minor process changes. The vendor's part nonetheless still meets our original min. and max. beta specs.
3. The demand and usage of the original 151-xxxx-00 device we select from has declined from 10k devices/period to 1k/period.
4. The cost of the raw part and the labor charge have both increased.

In this example, Tektronix is accumulating 151-xxxx-00 transistors at the rate of 44k devices per period. Though not all cases are as drastic, the trend certainly exists. We currently have around $160k worth of discrete devices in surplus stock.

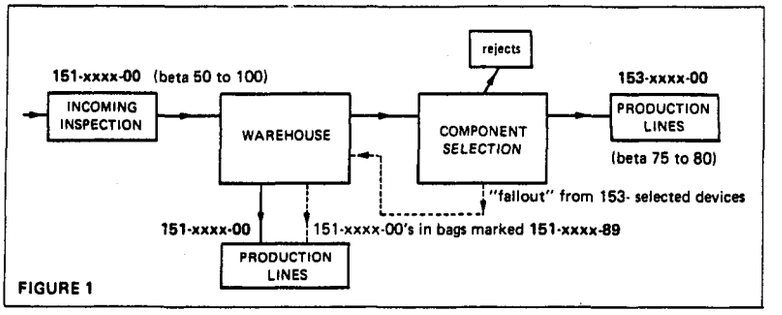

FIGURE 1

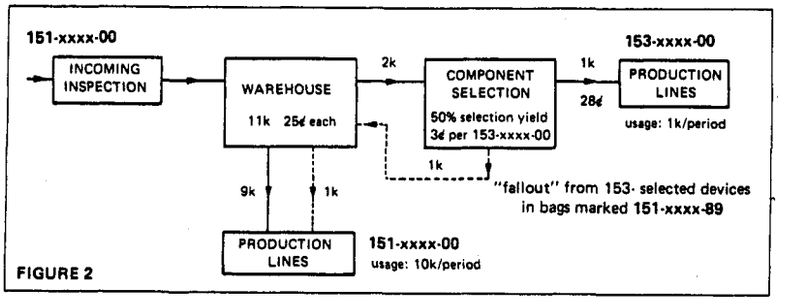

FIGURE 2

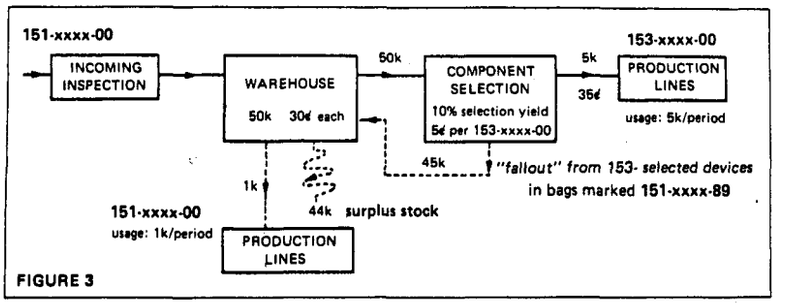

FIGURE 3

In light of this information, Tektronix has taken several steps to ensure that this problem will not reoccur. Effective immediately:

1. Any new selected component request will not be processed unless authorized by a Component Evaluation manager. This is to ensure that the actual cost of the selected part is known and that all other alternatives have been investigated.
2. Expected yield rates and all other hidden costs will be included in the cost of the selected component. For the example given, the actual cost, C_a, is:

$$C_a = (\text{raw cost} + \text{labor charge}) + \frac{(\text{surplus stock})(\text{raw cost})}{\text{no. of selected devices}}$$

$$C_a = 30¢ + 5¢ + \frac{44{,}000 \times 30¢}{5000}$$

$$= 35¢ + \$2.64 = \$2.99 \text{ per selected device}$$

3. Vendors will be queried to see if they can select components. Tek will select any parts where it is economically feasible to do so, but all costs will be computed and weighed before deciding to select in-house.

NOTES

PRODUCT SAFETY

There is a corporate committment for third party certification of all Tek products. This committment has resulted in a concerted effort by Product Safety to provide a complete evaluation of each product in order to be able to produce a single product that is acceptable under any codes, ordinances, laws or regulations anywhere in the world. This requires careful attention from the concept phase onward through the design process.

In the concept phase of new product introduction, engineering must carefully consider product use and misuse and the resulting safety implications. Product Safety will provide guidance for engineering in testing designs for safety features, and formatting the documented test data for the certifying lab. And, finally, manufacturing has a continuing responsibility to build products according to safety standards and to control approved materials.

0

Most of us think of "UL" when we think of safety certifying agencies. But Underwriters Laboratories isn't the only organization Tektronix regularly deals with. In fact, there are four basic kinds of certification:

FIRST-PARTY CERTIFICATION (Self-certification). Whether a product is in compliance with a standard is determined by the manufacturer of the product.

SECOND-PARTY CERTIFICATION. Product compliance with a standard is determined by the purchaser (at Tektronix, by the Incoming Inspection Group).

THIRD-PARTY CERTIFICATION. Compliance with a standard is determined by a group not connected with either the manufacturer or the purchaser. Underwriters Laboratories, Inc., Factory Mutual, and CSA (Canadian Standards Association), are examples. There are also various European certifying agencies.

MANDATED CERTIFICATION. Compliance with a standard is required by a regulatory agency, either U.S. or foreign.

Product Safety (PS) plays an overview role in acquiring certification for Tektronix instruments. PS's activities include reviewing the initial design for safety features, supporting engineering efforts to test each design for safety requirements, formatting test data for submission to the certifying agency, and supporting follow-up inspections of products manufactured.

PS also plays an important educational role because product safety is a new discipline and few engineers have received any formal training in designing for safety. So, PS communicated certification requirements to design engineers and is determined to impress them with the fact that seeking certification can add a lot of time to the new product introduction schedule (especially if the device has to be redesigned to include neglected safety features). The Product Safety guidebook is an important source of information.

Once the product has been designed, Product Safety reviews the initial model. At this time, PS helps the project manager determine which certifications will be required for the product; these certifications are included in the EIS. As soon as that decision has been made, PS will begin to assist in developing the safety certification program for that product.

The safety certification program outlines the information that must be supplied for each certification submittal. Every certification submittal has three main segments:

- description of some of the components in unlimited circuits (circuits in which there is a voltage higher than 42.4 volts peak, or in which the available power exceeds 150 watts, or in which the maximum current can exceed 8 amperes).
- physical description and identification of materials used, with special emphasis on flammable insulation systems.
- results of tests demonstrating resistance to shock, fire, etc.

Underwriters Laboratories "Lists" many Tektronix products after testing them against UL standards. In general, UL "Listing" indicates that the Tektronix product has met UL requirements as a stand-alone item. Also, UL "Recognizes" many Tektronix products as "components" of larger products or systems, made by original equipment manufacturers (OEM's). Some Tektronix products have both Listing and Recognition.

The following list contains the organizations and classifications with which we are currently working. From time to time organizations and classifications will be added to this list:

THIRD-PARTY CERTIFICATION:

UNDERWRITERS LABORATORIES, INC. (UL)	Listed Equipment or Recognized Component, Electrical and Electronic Measuring and Testing Equipment, UL 1244.
	Listed Equipment or Recognized Component, Medical and Dental Equipment, UL 544.
	Listed Equipment or Recognized Component, Office Appliances and Business Equipment, Electric, UL 114.
	Listed Equipment or Recognized Component, Data Processing Units & Systems, Electronic, UL 478.
	Classified Electrical and Electronic Measuring and Testing Equipment, IEC 348.
	Classified Safety of Data Processing Equipment, IEC 435.
FACTORY MUTUAL RESEARCH CORP.	Factory Mutual Electrical Utilization Equipment Approval Standard, FM 3820.
CANADIAN STANDARDS ASSOCIATION (CSA)	Category Certified Electronic Development and Test Equipment, CSA Electrical Bulletin 556B.
	Category Certified Data Processing Equipment, CSA Standard C22.2 No. 154-1975.
ASSOCIATION OF GERMAN ELECTRICAL ENGINEERS (VDE)	VDE Regulation for Electronic Measuring Instruments, VDE 0411.

FIRST-PARTY (self) CERTIFICATION:

INTERNATIONAL ELECTRO-TECHNICAL COMMISSION (IEC)	Certified by Tektronix to comply with appropriate IEC Standard.
	IEC 348, Safety Requirements for Electronic Measuring Apparatus.
	IEC 380, Electrical Safety of Office Machines.
	IEC 435, Safety of Data Processing Equipment.
	IEC 601-1, General Requirements for Safety of Electrical Equipment used in Medical Practice.
AMERICAN NATIONAL STANDARDS INSTITUTE (ANSI)	Certified by Tektronix to comply with appropriate ANSI Standard.

PRODUCT SAFETY (CONT)

MILITARY SPECIFICATION	Certified by Tektronix to meet the appropriate specification.
BRITISH TELECOM/AUSTRALIA TELECOM	Licensing of RS232 devices that are attached to telephone system.

MANDATED CERTIFICATION:

BUREAU OF RADIOLOGICAL HEALTH (BRH)	Complies with X-radiation requirements of Federal Standard for Television Receivers.
FOOD & DRUG ADMINISTRATION (FDA)	Complies with Good Manufacturing Practice (GMP) as per the Medical Device Amendments of 1975 to the Federal Food, Drug, and Cosmetic Act.
RADIATION PROTECTION BUREAU (Canada)	Complies with Radiation Emitting Devices Act.
MINISTER OF LABOUR, HEALTH & SCIENCE MATTERS NRW, FEDERAL REPUBLIC OF GERMANY	Type approval and license for incidental X-radiation devices.
FCC (U.S.), FTZ (GERMANY)	Licensing to meet EMI requirements.

Engineering groups are responsible for testing their own designs for safety features, but PS does provide support for these efforts. Engineering control of the tests ensures the quickest turnaround for the test data, and thus shortens the certification schedule. Engineering collects the test results onto data sheets for PS's review.

Unlike many other tests that evaluation and design groups perform, safety tests must be fully documented. Everything must be written down - procedures as well as results.

PS has responsibility for all Tektronix products. There are PS representatives in Beaverton, Walker Road and Wilsonville facilities. PS is responsible for mods as well as new instruments.

The product engineering group begins the product certification process by giving careful consideration to product safety and certification requirements during the concept phase of new product introduction. Product Safety's role is to support engineering efforts to provide test data and to give that data (in proper format) to the certification organization. In some product categories, the certifying organization has delegated full responsibility for certification to PSE, whereby PSE performs all the organization activities and supplies all the paperwork and product samples for verification of performance.

SAFETY CERTIFICATION PROCESS

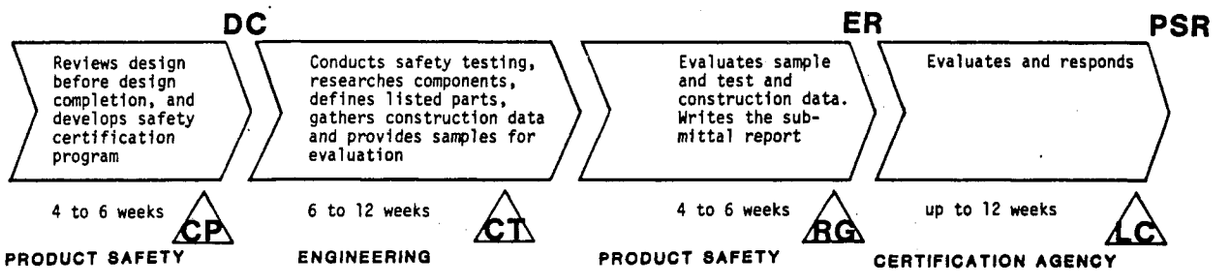

CP - CERTIFICATION PROGRAM DEVELOPED RG - CERTIFICATION REPORT GENERATED
CT - CERTIFICATION TESTING COMPLETED LC - LISTING COMPLETED

The above Safety Certification Process will be initiated and carried out on all new products. This process should begin with the initial concept phase of each product. The formal Certification Process should be scheduled in time for CP to coincide with DC. Once we have obtained third party certification, we are allowed to attach or imprint on the product the familiar UL, FM, and/or CSA markings with appropriate additional identification.

UL -- identifies Underwriters Laboratories listed products.

CSA -- identifies Canadian Standards Association certified products.

FM -- identifies Factory Mutual Approval on products.

VDE GS -- identifies the German test lab Verbands Deutscher Electrtechniker (VDE) on products.

We purchase many certified components for use in our products. This prior evaluation greatly simplifies our process of approval.

Component considerations for UL-Listed components are usually marked UL

UL-recognized components are found in the "Recognized Component Index" published by UL, commonly known as the "Yellow Book".

UL-recognized components should be marked

The German test lab Verbands Deutscher Electrtechniker (VDE) on components should be marked

CSA-certified components are usually marked CSA

CSA components are also found in the "List of Certified Electrical Equipment" published by CSA.

PRODUCT SAFETY (CONT)

Work doesn't stop even after we have certified the instrument. UL, FM, CSA and VDE make unannounced inspections of Tektronix manufacturing and testing facilities to check for compliance with the original submittal. For the City of Los Angeles, we annually submit a current sample for their review. Manufacturing has a continuing responsibility to make sure all required warning labels are attached and to maintain control of all approved parts (unapproved substitutions may void the certification).

In addition, Product Safety will be making unannounced inspections of instrument manufacturing and test facilities to insure Tek's maintenance of certification. These internal inspections are also required by CSA to maintain our Category Certification Authorization.

We are trying hard not to build obstacles to Certification into our products. We get the best results when we start with Certification in mind, right at the concept and design phase. Many dollars and hours will be saved while assuring Tektronix a front seat in the marketplace.

The following items are included with this article to serve as helpful hints to those pursuing certification:

OPERATING TEMPERATURES:

Recognition: The operating temperature of a component is not just the ambient temperature. It includes the temperatures at all points on the component. For instance, under mounted components such as resistors, transistors and heat sinks. Remember, circuit boards are also components! Therefore, components with recognition at high temperatures are desirable to allow as much design freedom as possible.

Listing: In instruments, low temperatures are most desirable from both the certifying organization aspect and for reliability.

Primary circuits: One of the critical areas in our products, as far as certification is concerned, is the primary or powerline circuit. Here we strive to use UL-Recognized or Listed, and CSA certified power cables, switches, fuseholders, fans, motors, counters, line filters, circuit boards, connections, wire, etc.

So far as we have been able to determine, any part with UL Recognition is so noted in this catalog.

OTHER CIRCUITS:

Further, Tek uses UL and CSA wire types in virtually all interior wiring, not just the primaries of our products.

Circuit boards will generally have to be UL-Recognized and flammability rated. Check with Product Safety for exceptions.

A Tektronix standard (062-1778-00) is available defining the UL circuit board recognition program. The standard will include materials and vendors which are recognized, what to do when changes are considered, layout pattern limitations, etc.

CATHODE RAY TUBES:

CRT products are controlled devices in the United States, Canada and Germany because they are incidental X-radiation generators.

CRT's are eligible for UL recognition after extensive implosion and X-ray tests.

For CRT's with a maximum screen dimension exceeding six inches (16 cm) inside measure, UL induces an implosion and measures the distance that the glass travels. (Tests are based on all-glass construction.)

Implosion is not considered to be a hazard for CRT's with faceplates smaller than six inches. And, we believe that implosion is not a problem for ceramic-funnel CRT's.

UL also measures CRT's for X-ray exposure according to government requirements imposed on the television industry (less than 0.5 mR/hour). These measurements are taken five centimeters away from the CRT faceplate and along the ceramic funnel.

Tektronix has an oscilloscope X-radiation standard (062-1860-00) that sets new instrument limits for X-ray exposure under "operating", "servicing" and "worst case display" modes to 0.1 mR/hour, 0.2 mR/hour and 0.3 mR/hour, respectively.

X-ray transmission can be limited by the thickness and type of glass used in the faceplate. For example, iso-exposure data indicates that PPG3459 glass must be at least 0.294 inch thick to meet our X-radiation limits for the 7904 and 7844. (Reference Technical Memo M-008.)

X-ray exposure along the ceramic funnel must also be limited. A good X-ray attenuating ceramic material can reduce the radiation level to below the 0.1 mR/hour acceptable limit.

Implosion and X-ray tests can be performed in our Environmental Labs (50-132). Further information on the X-ray attenuation properties of glass and ceramic materials is available from Ron Petersen, Extension 5475.

AFTER LISTING OR RECOGNITION

Briefly, Tek agrees to pay the expense of having UL, FM and CSA representatives verify our compliance with the process limits of our Certification, Recognition or Listing. The representative calls periodically on an unannounced basis. He brings with him a set of notes about what we're supposed to be doing to make the product safe.

For example, we are required to make our production circuit boards from the same materials used in the Recognition test samples and within the same design and process limits.

For this reason, any changes to Certified, Listed and Recognized instruments or Recognized processes must first be checked out with Product Safety. Some changes will then have to be approved by the test lab prior to implementation in order for us to maintain our certification.

Many Tek people are involved in the certification effort. Everyone has to be alert to see that the certified components, the manufacturing processes, and the safety features that went into products don't get changed inadvertently so that we might lose our Third Part Certification.

PRODUCT SAFETY (CONT)

WHO ARE THE PRODUCT SAFETY ENGINEERS? HOW CAN THEY HELP ME? This information, serving as the "yellow pages", can help put you on the right track:

CATEGORY	INDIVIDUAL	EXTENSION	DELIVERY STATION
ACCIDENTS INVOLVING PRODUCTS	Pete Perkins	627-1815	78-531
CIRCUIT BOARDS	Pete Perkins	627-1815	78-531
COMMUNICATIONS DIVISION PRODUCT CERTIFICATION	Don Hanson	627-1822	58-243
CRT's	Pete Perkins	627-1815	78-531
CORPORATE PRODUCT SAFETY ENGINEER	Rich Nute	627-1811	78-531
DESIGN AUTOMATION DIVISION PRODUCT CERTIFICATION	George Clark Bob Epling Bob Wallace	629-1563 629-1631 629-1633	92-132 92-132 92-132
GUIDEBOOK (PRODUCT SAFETY)	Pete Perkins	627-1815	78-531
INTERNATIONAL POWER CORDS	Rich Nute	627-1811	78-531
INTERNATIONAL PRODUCT SAFETY	Bob Randall	627-1810	78-531
INFORMATION DISPLAY DIVISION PRODUCT CERTIFICATION	Henry Jones Stan Foss Orv Olson	685-3959 685-3158 685-3231	63-203 63-203 63-203
INSTRUMENT DIVISION PRODUCT CERTIFICATION	Wally House Jim Averill Vaughn Weidel	627-7374 627-3104 627-3106	47-640 47-640 47-640
MANDATORY REPORTING	Pete Perkins	627-1815	78-531
MARKINGS	Jim Averill	627-3104	47-640
MEDICAL PRODUCTS	Henry Jones	685-3959	63-203
NATIONAL-INTERNATIONAL STANDARDS ACTIVITIES			
Test and Measuring Products	Rich Nute	627-1811	78-531
Data Processing; Office Equipment	Orv Olson	685-3231	63-203
Medical Products	Henry Jones	685-3959	63-203
PLASTICS, TEK MANUFACTURED	Bob Randall	627-7374	78-531
PRODUCT SAFETY LIABILITY POLICIES AND PROCEDURES	Pete Perkins	627-1815	78-531
WIRE AND CABLES	Bob Randall	627-7374	78-531
X-RADIATION REPORTING	Rich Nute	627-1815	78-531

TEK PART NUMBER SYSTEM
ALPHABETICAL

THIS IS NOT THE INDEX TO THIS CATALOG BUT TO THE TEK PN SYSTEM IN GENERAL

0

TYPE OF PARTS	CATEGORY
ACCESSORIES - SEE PROBE, CABLE OR SPECIFIC PART	
ACCESSORIES (SPECTROMETER)	016-1000-00
ACCESSORY PACKAGE (INSTRUMENT)	020-0000-00
ACTUATOR ASSEMBLY, CAM SWITCH	263-1000-00
ACTUATOR (GENERAL)	214-0000-00
ACTUATOR, CAMERA (ACCESSORY)	016-0200-00
ADAPTER (GENERAL PARTS, NOT ACCESSORY)	103-0000-00
ADAPTER, CAMERA (ACCESSORY)	016-0200-00
ADAPTER, ELECTRICAL (ACCESSORY)	013-0000-00
ADAPTER, GR CONNECTOR (ACCESSORY)	017-0000-00
ADAPTER, INSTRUMENT (ACCESSORY)	015-0000-00
ADAPTER, MECHANICAL (ACCESSORY)	014-0000-00
ADAPTER, PROBE (ACCESSORY)	015-0000-00
ADAPTER, RACK MOUNT (ACCESSORY)	016-0000-00
ADHESIVE	006-0000-00
ALUMINUM	251-0000-00 and 251-1000-00
ANGLES (SEE ALSO FRAME AND FRAME SECTIONS)	122-0000-00
ANVIL (SOLENOID, ETC.)	119-0000-00
ATTENUATION HEAD, PROBE (ACCESSORY)	010-0000-00
ATTENUATOR, FIXED AND VARIABLE (ACCESSORY)	011-0000-00
ATTENUATOR, 3mm (ACCESSORY)	015-1000-00
ATTENUATOR, GR (ACCESSORY)	017-0000-00
ATTENUATOR STRIP, DUMMY	124-0000-00
ATTENUATOR, TURRET SWITCH	263-0000-00
ATTENUATOR, PROBE HEAD (ACCESSORY)	010-0300-00
BAFFLE, AIR	378-0750-00
BANANA JACK (SEE JACK OR PLUG)	
BAND (MARKING)	334-0000-00
BAR (OTHER THAN BULK)	381-0000-00
BASE	432-0000-00
BATTERY	146-0000-00
BEARING	401-0000-00
BELTS (PULLEY, POSITIVE DRIVE, ETC.)	214-0000-00
BEZEL (ACCESSORY)	014-0000-00
BEZEL	200-0000-00
BINDER, LOAD	214-0000-00
BLADDER	214-0000-00 and 341-0000-00
BLADE, SHUTTER	122-0000-00
BLOCK	391-0000-00
BOARD, CIRCUIT (SEE CIRCUIT BOARD)	
BOARD, TERMINAL (SEE TERMINAL BOARD)	
BODY AND BODY HALF	204-0000-00
BOLT	214-0000-00
BOX	202-0000-00
BRACE	122-0000-00
BRACKET	406-0000-00 and 407-0000-00
BRASS (BULK)	251-0300-00 and 258-0300-00
BRONZE (BULK)	251-0300-00 and 258-0300-00
BRUSH, MOTOR	147-0200-00
BULB (SEE LAMP)	
BUMPER	348-0000-00
BUSHING	358-0000-00
BUTTON, PLUG	134-0000-00

TYPE OF PARTS	CATEGORY
CABINET AND CABINET SUBASSEMBLY	437-0000-00
CABINET PARTS (SIDES, TOPS, ETC.)	390-0000-00 (new and 386-0000-00 (old and 387-0000-00 (old
CABINET WRAPAROUND (INSTRUMENT TYPE)	390-0000-00
CABLE (BULK) & CABLE ASSEMBLY	175-0000-00 and 175-0499-00 and 175-1000-00
CABLE ASSEMBLY (ACCESSORY)	012-0000-00
CABLE ASSEMBLY, GR (ASSEMBLY)	017-0500-00
CABLE ASSEMBLY, PROBE	175-0000-00 and 175-1000-00
CABLE HARNESS (SEE WIRING HARNESS)	
CABLE, ELECTRODE ADAPTER (ACCESSORY)	012-0000-00
CABLE, INTERCONNECTING (ACCESSORY)	012-0000-00
CABLE, POWER (PROCESSED)	161-0000-00
CABLE, NIPPLE	200-0000-00
CALIBRATION FIXTURES	067-0000-00
CAM	401-0000-00
CAM SWITCH ACTUATOR ASSEMBLY (SEE ACTUATOR ASSEMBLY, CAM SWITCH)	
CAMERA PARTS & ASSEMBLIES (PURCHASED)	122-0500-00
CAMERA ACCESSORIES	016-0200-00
CAN	202-0000-00
CAP	200-0000-00
CAPACITOR, CHECKED, ETC.	295-0000-00
CAPACITOR, COUPLING (ACCESSORY)	011-0000-00
CAPACITOR, FIXED CERAMIC DIELECTRIC	281-0500-00
CAPACITOR, FIXED, ELECTROLYTIC	290-0000-00
CAPACITOR, FIXED (GLASS & PORCELAIN DIELECTRIC)	285-0000-00
CAPACITOR, FIXED, MICA DIELECTRIC	283-0500-00
CAPACITOR, FIXED (PLASTIC & PAPER DIELECTRIC)	285-0500-00
CAPACITOR, FIXED, PLASTIC (TEK-MADE)	291-0000-00
CAPACITOR, VARIABLE	281-0000-00
CAPACITOR WINDINGS (TEK-MADE)	291-0200-00
CAPACITORS, MATCHED	295-0000-00
CARTON (SHIPPING)	004-0000-00
CARTS (OSCILLOSCOPE)	016-0000-00
CASE	202-0000-00
CASE, CARRYING	016-0000-00
CASE, TRANSISTOR	202-0000-00
CASTER	401-0000-00
CATCH	105-0000-00
CATHODE RAY TUBE	154-0000-00
CERAMIC MATERIAL (BULK)	256-0000-00
CERAMIC STRIP (SEE TERMINAL STRIP, CERAMIC)	
CHAIN	214-0000-00
CHASSIS	441-0000-00
CHASSIS-TRACK (SEE SLIDE, RM AND GUIDE, RM)	
CHOPPER	119-0000-00
CIRCUIT BOARD (UNWIRED)	388-0500-00
CIRCUIT BOARD (2 or MORE 670-)	672-0000-00
CIRCUIT BOARD ASSEMBLY (WIRED)	670-0000-00
CIRCUIT BOARD ASSEMBLY	675-0000-00 and 700-0000-00
CIRCUIT BOARD KITS	675-0000-00
CIRCUIT BOARD SUBASSEMBLY	673-0000-00 and 678-0000-00
CIRCUIT BREAKER	260-0000-00

TEK PART NUMBER SYSTEM (CONT)
ALPHABETICAL

THIS IS NOT THE INDEX TO THIS CATALOG BUT TO THE PN SYSTEM IN GENERAL

TYPE OF PARTS	CATEGORY
CIRCUIT CARD (ACCESSORY)	018-0000-00
CLAMP	343-0000-00
CLIP	344-0000-00
CMS CARTON PACKAGES	065-0000-00
COIL, FIXED	108-0000-00
COIL, FIXED, REED SWITCH	108-0000-00
COIL, VARIABLE	114-0000-00
COLLAR	343-0000-00 (new) and 214-0000-00 (old)
COLUMN	426-0000-00
COMPENSATOR (ACCESSORY)	011-0000-00
CONDUCTOR, SINGLE (INSULATED)	175-5000-00
CONNECTOR (GENERAL)	131-0000-00
CONNECTOR (GR AND ASSOCIATED GR SUBPARTS)	132-0000-00
CONTACT	131-0000-00 (new) and 214-0000-00 (old)
COPPER (BULK)	251-0300-00 and 258-0300-00
CORD, LACING	253-0000-00
CORD, POWER (SEE CABLE, POWER)	
CORE (TRANSFORMER, COIL, FERRITE, ETC.)	276-0500-00
COUNTER	331-0000-00
COUPLING AND COUPLER	376-0000-00
COVER	200-0000-00
COVER, PROTECTIVE (OSCP)	016-0000-00
CRADLE	426-0000-00
CRT'S (SALEABLE)	154-0000-00
CRT MATERIAL	439-0000-00 and 440-0000-00
CRT MESH FILTER (SEE FILTER, MESH, CRT)	
CRYSTAL UNITS	158-0000-00
CUP	201-0000-00
CUSHION	348-0000-00
CUSTOM ENGINEERING PARTS	030-0000-00 to 038-0000-00
DELAY LINE (COAX CABLE TYPE & ACCESSORY)	015-1000-00
DELAY LINE	119-0000-00
DETENT, CAM SWITCH	214-0000-00
DIAL	331-0000-00
DIODE (SEE SEMICONDUCTOR DEVICE, DIODE)	
DISK OR DISC	214-0000-00
DOOR	200-0000-00
DRAWER	436-0000-00
DRUM	105-0000-00
DRUM, CAM SWITCH	105-0000-00
ELECTRON TUBES (CHECKED, ETC.)	157-0000-00
ELECTRON TUBES (INCLUDING CRT)	154-0000-00
ETCH CIRCUIT BOARD/CARD (SEE CIRCUIT BOARD/CARD)	
EXTENDER (ACCESSORY TYPE)	013-0000-00
EXTENSION SHAFT (SEE SHAFT, EXTENSION)	
EYELET	210-0600-00
FAN	119-0000-00
FASTENERS (SEE ALSO SCREW, NUT, LATCH, CATCH, ETC)	214-0000-00
FELT (BULK)	252-0500-00
FERRULE	166-0000-00
FIBER OPTIC, BULK (SEE LIGHT CONDUCTOR)	
FILM, IDENTIFICATION	334-0000-00

TYPE OF PARTS	CATEGORY
FILM, IDENTIFICATION	334-0000-00
FILTER, AIR	378-0000-00
FILTER (ELECTRONIC)	119-0000-00
FILTER, LIGHT	378-0500-00
FILTER, MESH, CRT	378-0500-00
FLANGE	386-0000-00
FLIP-STAND, CABINET	348-0000-00
FOIL	251-1000-00
FOOT	348-0000-00
FORM, COIL (SEE ALSO CORE)	276-0000-00
FRAME AND FRAME SECTIONS	426-0000-00
FRAME, MOUNTING (ACCESSORY)	014-0000-00
FRAME-PANEL, CABINET (FRONT, REAR, ETC.)	426-0000-00
FURNITURE	007-0000-00
FUSE	159-0000-00
GASKET	214-0000-00 (old) and 348-0000-00 (new)
GEARS	214-0000-00 (old) and 401-0000-00 (new)
GEAR BACK	214-0000-00
GEAR STOCK (BULK) SEE ROD, PINION	
GRATICULE	331-0000-00
GRILLE (FAN, ETC.)	378-0750-00
GRIP	367-0000-00
GROMMET	348-0000-00
GUARD	200-0000-00
GUIDE	351-0000-00
GUIDE, RM (SEE ALSO SLIDE, RM)	351-0000-00
HAND TOOLS	003-0000-00
HANDLE	367-0000-00
HARDWARE KIT	016-0000-00
HARDWARE (SEE WASHER, TERMINAL, NUT, SCREW OR SPECIFIC ITEM)	214-0000-00
HARNESS, WIRING (SEE WIRING HARNESS)	
HEADER	131-0000-00
HEAT SINK	214-0000-00
HINGE	214-0000-00
HOLDER	352-0000-00
HOLDER, LAMP (WITHOUT ELECTRICAL CONTACTS. USE LAMPHOLDER IF CONTACTS INCLUDED)	352-0000-00
HOOD, VIEWING (ACCESSORY, SEE VIEWING HOOD)	
HOUSING	380-0000-00
HUB	401-0000-00
HYBRID CIRCUIT (TEK-MADE)	155-0000-00
IDENTIFICATION ITEMS	334-0000-00
IMPELLER (AIR FAN)	369-0000-00
INSERT	377-0000-00
INSERT, SCREW THREAD	377-0000-00
INSULATION SLEEVING (HI-TEMP, SHRINK, ETC.)	162-0500-00
INSULATION, SLEEVING (PLAIN)	162-0000-00
INSULATOR	342-0000-00 (new) and 214-0000-00 (old)
INTEGRATED CIRCUITS (PURCHASED)	156-0000-00 and 160-0000-00
INTEGRATED CIRCUITS (TEK-MADE)	155-0000-00
INTERFACE UNITS	021-0000-00
JACK (TELEPHONE OR TIP)	131-0000-00

0

TEK PART NUMBER SYSTEM (CONT)
ALPHABETICAL

THIS IS NOT THE INDEX TO THIS CATALOG BUT TO THE TEK PN SYSTEM IN GENERAL

0

TYPE OF PARTS	CATEGORY
KEY (CONNECTOR AND LOCK)	214-0000-00
KITS, COMBINATION ASSEMBLIES	644-0000-00
KITS, CRT SHIELD	626-0000-00
KITS, DELAY LINE	636-0000-00
KITS, FAN MOTOR	635-0000-00
KITS, F & I	624-0000-00
KITS, FINAL	602-0000-00
KITS, FRAME PLATE	630-0000-00
KITS, HIGH VOLTAGE POWER	621-0000-00
KITS, LOW VOLTAGE POWER	620-0000-00
KITS, MISCELLANEOUS	650-0000-00
KITS, MISCELLANEOUS AMPLIFIER CHASSIS	616-0000-00
KITS, MISCELLANEOUS CHASSIS	610-0000-00
KITS, MISCELLANEOUS PLATES	631-0000-00
KITS, MISCELLANEOUS SHIELD	627-0000-00
KITS, MISCELLANEOUS SIGNAL & TRIGGER	660-0000-00
KITS, MODIFICATION (CS)	040-0000-00
KITS, MODULAR	655-0000-00
KITS, MOUNTING BRACKET	640-0000-00
KITS, PARTS REPLACEMENT (CS)	050-0000-00
KITS, PLUG-IN HOUSING	634-0000-00
KITS, POWER PLUG & SOCKETS	643-0000-00
KITS, RECTIFIER BRACKET	637-0000-00
KITS, SHIPPING	608-0000-00
KITS, SPECIAL EXCHANGE	046-0000-00
KITS, SPECIAL REPLACEMENT	045-0000-00
KITS, SUBPANEL	614-0000-00
KITS, SWEEP, DELAY SWEEP	619-0000-00
KITS, TEST	606-0000-00
KITS, TUBE	604-0000-00
KITS, VERTICAL AMPLIFIER	615-0000-00
KNOB	366-0000-00
KNOB-DIAL ASSEMBLY	366-0500-00
KNOB SKIRT (SEE RING, KNOB SKIRT)	
LABELS (IDENTIFICATION)	334-0000-00
LAMPS & LIGHTS	150-0000-00
LAMP, LED (LIGHT EMITTING DIODES)	150-1000-00
LEAD, SINGLE CONDUCTOR (INSULATED)	175-5000-00
LEADS (FORMED, SETS, SPL PATTERNS, ETC.)	195-0000-00
LIGHT CONDUCTOR	253-0000-00
LINOLEUM	252-0500-00
MANUAL, TECHNICAL	070-0000-00
METER	149-0000-00
MICROCIRCUIT (TEK-MADE)	155-0000-00
MICROCIRCUIT (PURCHASED)	156-0000-00
MICROCIRCUIT (PROGRAMMABLE MEMORIES)	160-0000-00
MOTORS	147-0000-00
NOSE, PROBE	206-0000-00
NUT	220-0400-00 and 210-0400-00
NUT BAR	220-0400-00
OFFICE SUPPLIES	002-0000-00
OPERATING SUPPLIES	006-0000-00
OPTIC COMPONENTS	122-0500-00

TYPE OF PARTS	CATEGORY
OSCILLATORS	119-0000-00
OSCILLOSCOPE CART	016-0000-00
PAD	348-0000-00
PAINT (BULK)	252-0000-00
PANEL (ETCH & ANODIZED) (FRONT, REAR, ETC.)	333-0000-00
PANEL (NOT ANODIZED) (REAR, SUB-, ETC.)	386-0000-00 387-0000-00
PAPER (BULK)	252-0500-00
PARTITION	386-0000-00
PART REPLACEMENT KITS	050-0000-00
PHOTO COMPONENTS	122-0500-00
PIGMENT, PLASTIC MOLDING MATERIAL	255-0000-00
PIN, CONNECTING (SEE TERMINAL PIN)	
PIN	214-0000-00
PINION ROD (SEE ROD, PINION)	
PIVOT ART	367-0000-00
PLASTIC SHEET AND STRIP, ROD, MOLDING MATERIAL (ALL BULK)	254-0500-00 and 255-0000-00
PLATE (IDENTIFICATION AND INSTRUCTIONS)	334-0000-00
PLATE (MISCELLANEOUS)	386-0000-00 and 387-0000-00
PLUG (TELEPHONE OR TIP)	134-0000-00
PLUNGER, SOLENOID	119-0000-00
POINTER	331-0000-00
POST (ELECTRICAL AND MECHANICAL)	129-0000-00
POT (SEE RESISTOR, VARIABLE)	
POWER SUPPLY (HV) INTERNAL INST. COMPONENT	119-0000-00
POWER SUPPLY (ACCESSORY)	016-0000-00
PRECIOUS METALS	257-0000-00
PRINTED MATTER	000-0000-00
PROBE	010-0000-00
PROBE HEADS	010-0300-00
PROBE PACKAGE	010-0000-00
PULLEY (SEE ALSO SPROCKET WHEEL)	214-0000-00 (old) and 401-0000-00 (new)
PUSHBUTTON/PUSHBUTTON ASSEMBLY	336-0000-00
RACK	405-0000-00
RAIL	122-0000-00
RECEPTACLE (CONNECTOR)	131-0000-00
RECEPTACLE (MECHANICAL ONLY)	136-0000-00
RECTIFIER (SELENIUM)	106-0000-00
RECTIFIER (SEMICONDUCTOR, GENERAL)	152-0000-00
RECTIFIER (SEMICONDUCTOR, SELECTED, ETC.)	153-0000-00
REDUCER	102-0000-00
REFLECTOR	378-0500-00
RELAY	148-0000-00
RELAY COMPONENTS (TEK-MADE)	148-3000-00
RELAY, MAGNETIC REED (SEE ALSO SWITCH, MAG REED)	148-0000-00
REPLACEMENT PARTS FOR PURCHASING ASSEMBLIES	118-0000-00
RESILIENT MOUNT	384-0000-00
RESISTOR (ATTENUATOR STRIPS)	307-1000-00
RESISTOR, FIXED, FILM (CARBON 0.5W)	309-0000-00
RESISTOR, FIXED, FILM (CARBON 1.0W)	310-0000-00
RESISTOR, FIXED, FILM (CARBON 1.0W)	310-0500-00
RESISTOR, FIXED, FILM (CARBON 0.125W, 1%)	318-0000-00
RESISTOR, FIXED, COMP. (0.125W, 5%)	317-0000-00
RESISTOR, FIXED, FILM (CARBON 0.25W, BELOW 5%)	319-0000-00
RESISTOR, FIXED, COMP. (0.25W, 5%)	315-0000-00

TEK PART NUMBER SYSTEM (CONT)
ALPHABETICAL

THIS IS NOT THE INDEX TO THIS CATALOG BUT TO THE TEK PN SYSTEM IN GENERAL

TYPE OF PARTS	CATEGORY
RESISTOR, FIXED, COMP. (0.25W, 10%)	316-0000-00
RESISTOR, FIXED, COMP. (0.5W, 5%)	301-0000-00
RESISTOR, FIXED, COMP. (0.5W, 10%)	302-0000-00
RESISTOR, FIXED, COMP. (1.0W, 5%)	303-0000-00
RESISTOR, FIXED, COMP. (1.0W, 10%)	304-0000-00
RESISTOR, FIXED, COMP. (2.0W, 5%)	305-0000-00
RESISTOR, FIXED, COMP. (2.0W, 10%)	306-0000-00
RESISTOR, FIXED, HV (SEE 307-)	314-0000-00
RESISTOR - KNOB, MATCHED	312-0100-00
RESISTOR (FIXED-MATCHED, SELECTED, SETS, ETC AT TEK)	312-0500-00
RESISTOR, FIXED, FILM (METAL FILM 0.125W, 1% OR LESS, STANDARD RES. VALUES)	321-0000-00
RESISTOR, FIXED, FILM (METAL FILM 0.125W, 1% OR LESS, SPECIAL VALUES)	321-0600-00
RESISTOR, FIXED, FILM (METAL FILM 0.125W, 1% OR LESS, STANDARD RES. VALUES)	321-1000-00
RESISTOR, FIXED, FILM (METAL FILM 0.25W, 1% OR LESS, STANDARD RES. VALUES)	322-0000-00
RESISTOR, FIXED, FILM (METAL FILM 0.25W, 1% OR LESS, SPECIAL VALUES)	322-0600-00
RESISTOR, FIXED, FILM (METAL FILM 0.25W, 1% OR LESS, STANDARD RES. VALUES)	322-1000-00
RESISTOR, FIXED, FILM (METAL FILM 0.5W, 1% OR LESS, STANDARD RES. VALUES)	323-0000-00
RESISTOR, FIXED, FILM (METAL FILM 0.5W, 1% OR LESS, SPECIAL VALUES)	323-0600-00
RESISTOR, FIXED, FILM (METAL FILM 0.5W, 1% OR LESS, STANDARD RES. VALUES)	323-1000-00
RESISTOR, FIXED, FILM (METAL FILM 1.0W, 1% OR LESS, STANDARD RES. VALUES)	324-0000-00
RESISTOR, FIXED, FILM (METAL FILM, 1.0W, 1% OR LESS, SPECIAL VALUES)	324-0600-00
RESISTOR, FIXED, FILM (METAL FILM 1.0W, BELOW 1%, STANDARD RES. VALUES)	324-1000-00
RESISTOR, FIXED, FILM (METAL FILM-MISC. NOT FITTING IN 321- THRU 324- CATEGORIES)	325-0000-00
RESISTOR, FIXED, FILM (ALL FILM NOT FITTING IN ANY PRECEDING CATEGORIES)	307-0000-00
RESISTOR, FIXED, FOIL	307-0000-00
RESISTOR, FIXED, THICK FILM	307-0000-00
RESISTOR, FIXED, WIREWOUND	308-0000-00
RESISTOR, VARIABLE	311-0000-00
RESISTOR, VARIABLE (SELECTED FROM 311- RES.)	312-0000-00
RETAINER	343-0000-00
RING	354-0000-00
RING, KNOB SKIRT	354-0000-00
RING, RETAINING	354-0000-00
RING, TRIM	354-0000-00
RIVET	210-0600-00
ROD (MISCELLANEOUS)	385-0000-00
ROD, PINION	251-1000-00
ROTATING MECHANICAL PARTS	401-0000-00
ROTOR, VARIABLE RESISTOR	401-0000-00
RUBBER (BULK)	252-0500-00
SCALE	331-0000-00
SCREEN	378-0750-00
SCREW (UP THRU 5-40)	211-0000-00
SCREW (6-32 AND SMALLER)	211-0500-00
SCREW (8-32)	212-0000-00
SCREW (10-24, 10-32, 12-24 & 12-32)	212-0500-00
SCREW (ABOVE 12-32 & TAPPING, SETSCREWS, ETC.)	213-0000-00
SEMICONDUCTOR DEVICE, DIODE	152-0000-00

TYPE OF PARTS	CATEGORY
SEMICONDUCTOR DEVICE, DIODE (CHECKED, ETC.)	153-0000-00
SETSCREW	213-0000-00
SHAFT, EXTENSION & SPACING	384-0000-00
SHAFT (OTHER)	384-0500-00
SHEET, NON-METALLIC (PAPER, FELT, LINOLEUM, PLASTIC)	107-0000-00
SHELF	436-0000-00
SHELL (GENERAL)	205-0000-00
SHELL, KNOB	366-0000-00
SHIELD (ELECTRICAL AND MECHANICAL)	337-0000-00
SHIELD, IMPLOSION	337-0000-00
SHIELDING GASKET, ELECTRICAL	348-0000-00
SHIM	361-0000-00
SHIPPING SUPPLIES	004-0000-00
SHOCKMOUNT	348-0000-00
SHUTTER (CAMERA)	122-0500-00
SILICON WAFERS	203-0000-00
SLEEVE (MARKING)	334-0000-00
SLEEVE, SPACER	361-0000-00
SLIDE	351-0000-00
SLIDE, RM	351-0000-00
SLIDE, GUIDE, RM (ASSEMBLY)	361-0000-00
SLUG (CORE)	276-0000-00
SOCKET	136-0000-00
SOLDER (BULK)	251-0500-00
SOLDER LUG (SEE TERMINAL, LUG)	
SOLENOID	119-0000-00
SPACER (THREADED)	129-0000-00
SPACER (UNTHREADED)	361-0000-00
SPARES LISTS, INTERNATIONAL	060-0000-00
SPECIAL PRINTED ITEMS	061-0000-00
SPRING	214-0000-00
SPROCKET WHEEL	401-0000-00
STAINLESS STEEL (BULK)	251-0500-00
STANDARDIZERS (ACCESSORY)	011-0000-00
STEEL (BULK)	251-0500-00
STEM	355-0500-00
STIFFENER	386-0000-00
STOP	105-0000-00
STRAIN RELIEF (SEE BUSHING)	358-0000-00
STRAP	346-0000-00
STRIKE	105-0000-00
STRIP (CERAMIC TRIM, FELT, TRIM METAL, RUBBER, ETC.)	124-0000-00
STUD	355-0000-00
SUBPANEL	386-0000-00 and 387-0000-00
SUBSTRATE	204-0000-00
SUPPORT	386-0000-00 and 387-0000-00
SWITCH, PURCHASED	260-0000-00
SWITCH, MAGNETIC REED	260-0000-00
SWITCH (WIRED)	262-0000-00
SWITCHES, TEK-MADE, OTHER THAN CAM (OPTICAL, MBS PANCAKE AND TURRET)	263-0000-00
SWITCH ASSEMBLY, TEK-MADE, OTHER THAN CAM (OPTICAL MBS, PANCAKE AND TURRET	263-0000-00
SWITCHES, TEK-MADE, CAM	263-1000-00
SWITCH ASSEMBLY, TEK-MADE, CAM	263-1000-00
SYSTEM PARTS	039-0000-00

TEK PART NUMBER SYSTEM (CONT)
ALPHABETICAL

THIS IS NOT THE INDEX TO THIS CATALOG BUT TO THE TEK PN SYSTEM IN GENERAL

0

TYPE OF PARTS	CATEGORY
TAG	334-0500-00
TANK	202-0000-00
TAPE (PUNCHED OR MAGNETIC PROGRAM)	016-0000-00
TAPE	253-0000-00
TERMINAL (ELECTRICAL)	131-0000-00
TERMINAL, BLADE	131-0000-00
TERMINAL BOARD	392-0000-00
TERMINAL, LUG	210-0200-00
TERMINAL, PIN	131-0000-00
TERMINAL STRIP, CERAMIC	123-0000-00 and 124-0000-00
TERMINAL STRIP (OTHER)	124-0000-00
TERMINAL, STUD	131-0000-00
TERMINATION (ACCESSORY GENERAL)	011-0000-00
TERMINATION (ACCESSORY 3mm)	015-1000-00
TERMINATION (ACCESSORY GR)	017-0000-00
THREAD	253-0000-00
THUMBSCREW	213-0000-00 (new) and 214-0000-00 (old)
TIE PLATE (CABINET, ETC.)	344-0000-00
TIE STRIP (CIRCUIT BOARD, ETC.)	344-0000-00
TIN (BULK)	251-0500-00
TIP, PROBE (ALL EXCEPT BELOW)	206-0000-00
TIP, PROBE (REMOVABLE, RETRACTABLE ONLY)	013-0000-00
TRAINING AID (VIDEO)	068-0000-00
TRAINING CLASS	068-9000-00
TRANSISTOR (CHECKED)	153-0500-00
TRANSISTOR (FIELD EFFECT)	151-1000-00
TRANSISTOR (GENERAL)	151-000-000 and 151-0600-00
TRANSISTORS, MATCHED	153-0500-00
TRANSISTORS (SPECIAL)	151-0500-00
TRANSFORMER	120-0000-00
TRAY	436-0000-00
TRIM	101-0000-00
TUBE, SPACER	
TUBE, VACUUM (CHECKED, ETC., SEE ELECTRON TUBE)	
TUBES, VACUUM AND CRT (SEE ELECTRON TUBE & CRT)	166-0000-00
TUBING, INSULATION (SEE INSULATION SLEEVING)	
TURRET SWITCH (SEE SWITCH, TURRET)	
VALVE	214-0000-00 (new) and 341-0000-00 (old)
VARNISH (BULK)	252-0000-00
VIEWING HOOD, CRT (ACCESSORY)	016-0000-00
WASHER (OTHER THAN LOCK)	210-0800-00
WASHER, LOCK	210-0000-00
WHEEL	401-0000-00
WINDOW	331-0000-00
WIRE, ELECTRICAL (BULK-BARE)	176-0000-00
WIRE, ELECTRICAL (BULK-INSULATED)	175-0500-00
WIRE (BULK-COLOR CODED)	177-0000-00
WIRE SET (ELECTRICAL)	198-0000-00
WIRE SWITCHED (SEE SWITCH ASSEMBLY)	
WIRING HARNESS	179-0000-00

TEK PART NUMBER SYSTEM (CONT)

NUMERICAL

THIS IS NOT THE INDEX TO THIS CATALOG, BUT TO THE TEK PN SYSTEM IN GENERAL

CATEGORY	TYPE OF PARTS
000-0000-00	PRINTED MATTER
002-0000-00	OFFICE SUPPLIES
003-0000-00	HAND TOOLS
004-0000-00	SHIPPING SUPPLIES
006-0000-00	OPERATING SUPPLIES
007-0000-00	FURNITURE
010-0000-00	ACCESSORIES (PROBES & PROBE PACKAGES)
010-0300-00	ACCESSORIES (PROBE HEADS, ATTENUATOR HEADS)
011-0000-00	ACCESSORIES (TERMINATIONS, ATTENUATORS, STANDARDIZERS, UHF & BNC)
012-0000-00	ACCESSORIES (CABLE ASSEMBLY & LEADS)
013-0000-00	ACCESSORIES (CONNECTING, ADAPTING & EXTENDING UNITS NOT CABLES)
014-0000-00	ACCESSORIES (MECH: MOUNTING, FRAMES, BEZELS, ADAPTERS, ETC.)
015-0000-00	ACCESSORIES (ELEC: PROBE & INST. ADAPTER UNITS)
015-1000-00	ACCESSORIES (TERMINATIONS, ATTENUATORS, ETC., WITH 3mm CONNECTORS)
016-0000-00	ACCESSORIES (MISC: OSP CARTS, CARRY CASES, VIEWING HOODS, TAPES, RACK ADAPTERS, INSTRUMENT PROTECTIVE COVERS, POWER SUPPLY, CAMERA ADAPT, ACTUATORS, ETC.)
016-1000-00	ACCESSORIES (SPECTROMETER)
017-0000-00	ACCESSORIES (TERMINATIONS, ATTENUATORS, ADAPTERS, ETC., WITH GR CONNECTORS)
017-0500-00	ACCESSORIES (GR TERMINATED CABLES)
018-0000-00	ACCESSORIES (SALEABLE CIRCUIT CARDS)
020-0000-00	INSTRUMENT ACCESSORY PACKAGE
021-0000-00	INTERFACE UNITS
030-0000-00 to 038-0000-00	CUSTOM ENGINEERING PARTS
039-0000-00	SYSTEM PARTS
040-0000-00	MODIFICATION KITS (CS)
045-0000-00	SPECIAL REPLACEMENT KITS
046-0000-00	SPECIAL EXCHANGE KITS
050-0000-00	PARTS REPLACEMENT KITS (CS)
060-0000-00	SPARES LISTS, INTL.
061-0000-00	SPECIAL PRINTED ITEMS
062-0000-00	SPECIAL PRINTED ITEMS, TECHNICAL DATA SHEETS
065-0000-00	CMS CARTON PACKAGES
067-0000-00	CALIBRATION FIXTURE
068-0000-00	TRAINING AID (VIDEO)
068-9000-00	TRAINING CLASS
070-0000-00	MANUAL, TECHNICAL
101-0000-00	TRIM (SEE ALSO 124- & 107-)
102-0000-00	REDUCERS
103-0000-00	ADAPTERS
105-0000-00	CATCH, LATCH, LOCK, STOP, DRUM, ETC.
106-0000-00	RECTIFIERS (SELENIUM)

CATEGORY	TYPE OF PARTS
107-0000-00	NON-METALLIC SHEETS (PAPER, FELT, LINOLEUM, PLASTIC, ETC., NOT BULK, SEE 252-0500-00)
108-0000-00	COILS (FIXED)
114-0000-00	COILS (VARIABLE)
118-0000-00	REPLACEMENT PARTS FOR PURCHASING ASSEMBLIES
119-0000-00	MISC. ELECTRICAL COMPONENTS (DELAY LINE, FILTER, CHOPPER, OSCILLATOR, POWER SUPPLY, FAN, ETC.)
120-0000-00	TRANSFORMERS (FIXED & VARIABLE)
122-0000-00	ANGLES & RAILS (STRUCTURAL -- SEE ALSO 426-)
122-0500-00	PHOTO & OPTIC COMPONENTS (CAMERA)
123-0000-00	TERMINAL STRIP, CERAMIC (TURRET)
124-0000-00	STRIPS (CERAMIC TERMINAL, PAPER, FELT, TRIM, METAL, RUBBER, ATTENUATOR, ETC.)
129-0000-00	POSTS (ELECTRICAL & MECHANICAL)
131-0000-00	CONNECTORS, CONTACTS, TERMINALS, HEADERS, ETC. (SEE ALSO 134- & 136-)
132-0000-00	GR CONNECTORS & PARTS
134-0000-00	PLUGS (SEE ALSO 131- & 136-)
136-0000-00	SOCKET, LAMPHOLDER (W/CONTACTS) & LIGHT, INDICATOR (SEE ALSO 131- & 134-)
146-0000-00	BATTERY
147-0000-00	MOTORS
147-0200-00	MOTOR BRUSHES
148-0000-00	RELAYS (INCLUDING MAGNETIC REED)
148-3000-00	COMPONENTS FOR TEK-MADE RELAYS
149-0000-00	METERS
150-0000-00	LAMPS & LIGHTS (INCLUDING LAMP, CARTRIDGE: GLOW & INCANDESCENT
150-1000-00	LAMP, LED (LIGHT EMITTING DOIDES)
151-0000-00	TRANSISTORS (GENERAL)
151-0500-00	TRANSISTORS (SPECIAL)
151-0600-00	TRANSISTORS (GENERAL)
151-1000-00	TRANSISTORS (FIELD EFFECT)
152-0000-00	DIODES
153-0000-00	DIODES (MATCHED, SELECTED, SETS, ETC. FROM 152- DIODES)
153-0500-00	TRANSISTORS (MATCHES, SELECTED, SETS, ETC. FROM 151- TRANSISTORS)
154-0000-00	ELECTRON TUBES (VACUUM & CRT)
155-0000-00	MICROCIRCUIT (TEK-MADE)
156-0000-00	MICROCIRCUIT (PURCHASED)
157-0000-00	ELECTRON TUBES (MATCHED, SELECTED, SETS, ETC. FROM 154- TUBES)
158-0000-00	CRYSTAL UNITS
159-0000-00	FUSES
160-0000-00	MICROCIRCUIT (PROGRAMMABLE MEMORIES)
161-0000-00	CABLES (POWER-BULK & PROCESSED)
162-0000-00	INSULATION SLEEVING (PLAIN)
162-0500-00	INSULATION SLEEVING (HI TEMP, HEAT SHRINK, ETC.)

TEK PART NUMBER SYSTEM (CONT)
NUMERICAL

THIS IS NOT THE INDEX TO THIS CATALOG, BUT TO THE TEK PN SYSTEM IN GENERAL

0

CATEGORY	TYPE OF PARTS
166-0000-00	TUBES, SLEEVES & FERRULES (MECHANICAL)
175-0000-00 to 175-0499-00 and 175-1000-00 up	CABLES (BULK & PROCESSED)
175-0500-00	WIRE & LEADS (INSULATED)
175-5000-00	SINGLE CONDUCTOR (INSULATED) (SEE ALSO LEADS)
176-0000-00	WIRE & LEADS (BARE)
177-0000-00	WIRE, ELECTRICAL: BULK (COLOR CODED)
179-0000-00	WIRING HARNESS
195-0000-00	LEADS (FORMED, SETS, SPL PATTERNS, ETC.)
198-0000-00	WIRE SET, ELECTRICAL
200-0000-00	COVERS, CAPS, BEZELS, CABLE NIPPLES, DOORS, ETC.
201-0000-00	CUPS
202-0000-00	CANS, BOXES, CASES, ETC.
203-0000-00	SILICON WAFERS
204-0000-00	BODY, BODY HALF & SUBSTRATE
205-0000-00	SHELLS & SHELL HALVES
206-0000-00	NOSES & TIPS (PROBES)
210-0000-00	LOCK WASHERS
210-0200-00	LUG TERMINALS
210-0400-00	NUTS
210-0600-00	EYELETS & RIVETS
210-0800-00	WASHERS (NOT LOCK TYPE)
211-0000-00	SCREWS (UP THRU 5-40)
211-0500-00	SCREWS (6-32 & SMALLER)
212-0000-00	SCREWS (8-32)
212-0500-00	SCREWS (10-24, 10-32, 12-24 & 12-32)
213-0000-00	SCREWS (ABOVE 12-32 & TAPPING SETSCREWS, ETC.)
214-0000-00	MISCELLANEOUS HARDWARE
220-0400-00	NUTS
251-0000-00	ALUMINUM (BULK MATERIAL: EXTRUSIONS, SHEETS, ETC.)
251-0300-00	BRASS, COPPER, BRONZE (BULK MATERIAL: SEE 258-0300-00)
251-0500-00	STEEL, TIN SOLDER, SST, ETC. (BULK MATERIAL)
251-1000-00	ALUMINUM (BULK MATERIAL: EXTRUSIONS, SHEETS, FOIL, ROD, TUBE, ETC.
252-0000-00	VARNISH, PAINT, ETC.
252-0500-00	NON-METALLIC SHEETS (BULK: PAPER, FELT, LINOLEUM, RUBBER, FIBER -- SEE 107-)
253-0000-00	LACING CORD, TAPE, THREAD, LIGHT CONDUCTOR, ETC. (BULK)
254-0500-00	PLASTIC SHEETS & STRIPS (BAKELITE, EPOXY, FORMICA, COPPER CLAD, GLASS LAM, ETC. -- BULK)
254-0900-00 to 255-0000-00	PLASTIC ROD, SHEET & STRIP (PLAIN), FILM, MOLDING MATERIAL, ETC., ALL BULK
256-0000-00	CERAMIC BULK MATERIAL
257-0000-00	PRECIOUS METALS
258-0300-00	BRASS, COPPER, BRONZE (BULK MATERIAL: SEE 251-0300-00)

CATEGORY	TYPE OF PARTS
260-0000-00	SWITCHES, PURCHASED
262-0000-00	SWITCHES, WIRED
263-0000-00	SWITCHES AND ASSEMBLIES (TEK-MADE) OTHER THAN CAM OPTICAL, MBS, PANCAKE & TURRET
263-1000-00	SWITCHES AND ASSEMBLIES (TEK-MADE) CAM
276-0000-00	FORMS (COILS, TRANSFORMERS, DELAY IN, ETC.)
276-0500-00	CORES (COILS, TRANSFORMERS, FERRITE, ETC.)
281-0000-00	CAPACITORS (VARIABLE)
281-0500-00	CAPACITORS (FIXED CERAMIC)
283-0000-00	CAPACITORS (FIXED CERAMIC DISC TYPE)
283-0500-00	CAPACITORS (FIXED MICA)
285-0000-00	CAPACITORS (FIXED GLASS & PORCELAIN)
285-0500-00	CAPACITORS (FIXED PAPER & PLASTIC: INCLUDED TUBULAR TEK-MADE)
290-0000-00	CAPACITORS (FIXED ELECTROLYTIC)
291-0000-00	CAPACITORS (FIXED PLASTIC, TEK-MADE IN OVAL CAN)
291-0200-00	CAPACITOR WINDINGS (TEK-MADE)
295-0000-00	CAPACITORS (MATCHED, SELECTED, SETS, ETC.)
301-0000-00	RESISTORS (FIXED COMP - 0.5W, 5%)
302-0000-00	RESISTORS (FIXED COMP - 0.5W, 10%)
303-0000-00	RESISTORS (FIXED COMP - 1.0W, 5%)
304-0000-00	RESISTORS (FIXED COMP - 1.0W, 10%)
305-0000-00	RESISTORS (FIXED COMP - 2.0W, 5%)
306-0000-00	RESISTORS (FIXED COMP - 2.0W, 10%)
307-0000-00	RESISTORS (FIXED SPECIALS)
307-1000-00	RESISTORS (ATTENUATOR STRIPS)
308-0000-00	RESISTORS (FIXED WIREWOUND)
309-0000-00	RESISTORS (FIXED CARBON FILM - 0.5W)
310-0000-00	RESISTORS (FIXED CARBON FILM - 1.0W)
310-0500-00	RESISTORS (FIXED CARBON FILM - ABOVE 1.0W)
311-0000-00	RESISTORS (VARIABLE)
312-0000-00	RESISTORS (VARIABLE - SELECTED FROM 311- RES)
312-0100-00	RESISTORS - KNOB, MATCHED
312-0500-00	RESISTORS (FIXED - MATCHES, SELECTED, SETS, ETC. AT TEK)
314-0000-00	RESISTORS (FIXED HIGH VOLTAGE - SEE 307-)
315-0000-00	RESISTORS (FIXED COMP - 0.25W, 5%)
316-0000-00	RESISTORS (FIXED COMP - 0.25W, 10%)
317-0000-00	RESISTORS (FIXED COMP - 0.125W, 5%)
318-0000-00	RESISTORS (FIXED CARBON FILM - 0.125W, 1%)
319-0000-00	RESISTORS (FIXED CARBON FILM - 0.25W, BELOW 5%)
321-0000-00	RESISTORS (FIXED METAL FILM - 0.125W, 1% OR LESS, STANDARD RES. VALUES)
321-0600-00	RESISTORS (FIXED METAL FILM - 0.125W, 1% OR LESS, SPECIAL VALUES)
321-1000-00	RESISTORS (FIXED METAL FILM - 0.125W, 1% OR LESS, STANDARD RES. VALUES)
322-0000-00	RESISTORS (FIXED METAL FILM - 0.25W, 1% OR LESS, STANDARD RES. VALUES)

TEK PART NUMBER SYSTEM (CONT)
NUMERICAL

THIS IS NOT THE INDEX TO THIS CATALOG, BUT TO THE TEK PN SYSTEM IN GENERAL

CATEGORY	TYPE OF PARTS
322-0600-00	RESISTORS (FIXED METAL FILM - 0.25W, 1% OR LESS, SPECIAL VALUES)
322-1000-00	RESISTORS (FIXED METAL FILM - 0.25W, 1% OR LESS, STANDARD RES. VALUES)
323-0000-00	RESISTORS (FIXED METAL FILM - 0.5W, 1% OR LESS, STANDARD RES. VALUES)
323-0600-00	RESISTORS (FIXED METAL FILM - 0.5W, 1% OR LESS, SPECIAL VALUES)
323-1000-00	RESISTORS (FIXED METAL FILM - 0.5W, 1% OR LESS, STANDARD RES. VALUES)
324-0000-00	RESISTORS (FIXED METAL FILM - 1.0W, 1% OR LESS, STANDARD RES. VALUES)
324-0600-00	RESISTORS (FIXED METAL FILM - 1.0W, 1% OR LESS, SPECIAL VALUES)
324-1000-00	RESISTORS (FIXED METAL FILM - 1.0W, 1% OR LESS, STANDARD RES. VALUES)
325-0000-00	RESISTORS (FIXED METAL FILM - MISC. NOT FITTING IN 321- THRU 324- CATEGORIES)
331-0000-00	DIALS, GRATICULES, SCALES, WINDOW, MAST (GRAT) ETC.
333-0000-00	PANELS (ETCHED & ANODIZED - FRONT, REAR, ETC.)
334-0000-00	IDENTIFICATION ITEMS (PLATES, LABELS, ETC.)
337-0000-00	SHIELDS (ELECTRICAL & MECHANICAL - SEE ALSO 200-)
341-0000-00	VALVE & BLADDER (CANCELLED - USE 214-)
342-0000-00	INSULATORS
343-0000-00	CLAMPS & RETAINERS
344-0000-00	CLIPS, TIE STRIP, TIE PLATE, ETC.
346-000-000	STRAPS
348-0000-00	CUSHION, FOOT, GROMMET, GASKET, RESIL MOUNT, FLIP-STAND, ETC.
351-0000-00	GUIDES & SLIDES (INCLUDING CHASSIS TRACK TYPE)
352-0000-00	HOLDERS
354-0000-00	RING (INCLUDING RING, KNOB SKIRT & RING, TRIM)
355-0000-00	STUDS
355-0500-00	STEMS
358-0000-00	BUSHINGS
361-0000-00	SPACERS & SHIMS
366-0000-00 and 366-1000-00	KNOBS, PUSHBUTTONS AND KNOB SHELLS
366-0500-00	KNOB-DIAL ASSEMBLY (ASSEMBLY OF 331- & 366-)
367-0000-00	HANDLES, GRIPS, PIVOT ARMS, ETC.
369-0000-00	IMPELLERS
376-0000-00	COUPLINGS
377-0000-00	INSERT (KNOB, SCREW THREAD, ETC.)
378-0000-00	FILTERS (AIR)
378-0500-00	FILTERS (LIGHT & CRT MESH & REFLECTOR LIGHT)
378-0750-00	SCREENS, GRILLES & BAFFLES (AIR)
380-0000-00	HOUSINGS
381-0000-00	BARS (COMPONENT - USE 251- & 258 - NOT BULK)
384-0000-00	EXTENSION SHAFTS
384-0500-00	SHAFTS & RODS (NOT EXTENSION OR SPACING)

CATEGORY	TYPE OF PARTS
385-0000-00	RODS (SPACING: THREADED ENDS)
386-0000-00 to 387-0000-00	SUBPANELS, REAR PANELS, PLATES, SUPPORTS, STIFFENERS, LIGHT CONDUCTORS (NOT BULK), ETC.
388-0000-00	NOT ASSIGNED
388-0500-00	CIRCUIT BOARDS & CARDS (UNWIRED)
390-0000-00	CABINET PARTS (BOTTOM, TOP, SIDE, WRAPAROUND, ETC.)
391-0000-00	BLOCK
392-0000-00	BOARD & TERMINAL BOARD
401-0000-00	ROTATING DEVICES (WHEELS, CASTERS, BEARINGS, CAMS, PULLEYS, HUBS, ETC.)
405-0000-00	RACKS
406-0000-00 to 407-0000-00	BRACKETS
426-0000-00	FRAMES, FRAME SECTIONS & FRAME PANELS
432-0000-00	BASES
436-0000-00	STORAGE ITEMS (DRAWER, TRAY, SHELF, ETC.)
437-0000-00	CABINETS & CABINET SUBASSEMBLIES
439-0000-00	CRT MATERIALS
440-0000-00	CRT ASSEMBLIES
441-0000-00	CHASSIS
602-0000-00	KITS, FINAL
604-0000-00	KITS, TUBE
606-0000-00	KITS, TEST
608-0000-00	KITS, SHIPPING
610-0000-00	KITS, MISCELLANEOUS CHASSIS
614-0000-00	KITS, SUBPANEL
615-0000-00	KITS, VERTICAL AMPLIFIER
616-0000-00	KITS, MISCELLANEOUS AMPLIFIER CHASSIS
619-0000-00	KITS, SWEEP, DELAY SWEEP
620-0000-00	KITS, LOW VOLTAGE POWER
621-0000-00	KITS, HIGH VOLTAGE POWER
624-0000-00	KITS, F & I
626-0000-00	KITS, CRT SHIELD
627-0000-00	KITS, MISCELLANEOUS SHIELD
630-0000-00	KITS, FRAME PLATE
631-0000-00	KITS, MISCELLANEOUS PLATES
634-0000-00	KITS, PLUG-IN HOUSING
635-0000-00	KITS, FAN MOTOR
636-0000-00	KITS, DELAY LINE
637-0000-00	KITS, RECTIFIER BRACKET
640-0000-00	KITS, MOUNTING BRACKET
643-0000-00	KITS, POWER PLUG & SOCKETS
644-0000-00	KITS, COMBINATION ASSEMBLIES
650-0000-00	KITS, MISCELLANEOUS
655-0000-00	KITS, MODULAR
660-0000-00	KITS, MISCELLANEOUS SIGNAL & TRIGGER
670-0000-00	CIRCUIT BOARD (WIRED 388-)
672-0000-00	CIRCUIT BOARD (2 OR MORE 670-)
673-0000-00	CIRCUIT BOARD SUBASSEMBLIES
675-0000-00	CIRCUIT BOARD KITS
678-0000-00	CIRCUIT BOARD SUBASSEMBLIES
700-0000-00	CIRCUIT BOARD ASSEMBLIES

PARTS AND PRODUCTS STATUS CODES

The following definitions apply to the status and source codes presently being input into the Data Base:

CR	Current Production	TC	Telequipment Current Production
EN	Engineering	IN	International
PP	Pre-Production	DS	Digital Systems
CS	Customer Service	SC	Sony/Tek Current Production
NP	Non-Production	OT	Obsolescent
DL	Deleted	MP	Modified Part
OB	Obsolete	LR	Last Supply Current
CM	Custom Mod	LS	Last Supply Customer Service
VN	Vendor		

Current Production (CR):

1. A finished product, which has "turned regular" and is currently being produced in Beaverton.
2. A component currently being purchased or produced in Beaverton for use on a current production finished product.

Engineering (EN):

An item used exclusively by Engineering which is not being used on a finished product. The item may be picked up for use in future product.

Pre-Production (PP):

1. A finished product prior to "turn regular".
2. A component used on an instrument not yet in current production, or a component going into a current product via an IRS (mod).

Customer Service (CS):

A replacement item, not used in a current production instrument, supported by Customer Service and either stocked in Customer Service, built or supplied for them on demand.

Non-Production (NP):

An item which is no longer produced or purchased and which has a replacement.

Deleted (DL):

An item that is no longer produced or purchased and which has no replacement.

Obsolete (OB):

1. A component which has matured through the Long Term Product Support Program. The usage has been out of production for 12 years (sometimes less, if accelerated). The item may continue to be supported through Obsolete Parts Notice 126.
2. An instrument which is no longer produced and which has completed the instrument phase-out program.

Custom Mod (CM):

1. An instrument modified to meet customer specifications.
2. A component used exclusively in a custom modified instrument.

Vendor (VN):

A Tek-made or purchased item which requires a vendor operation somewhere in the processing sequence.

Telequipment (TC):

An item purchased or produced by Telequipment for use exclusively in Telequipment production.

International (IN):

An item purchased or produced by Guernsey or Heerenveen for use exclusively in their production.

Digital Systems (DS):

An item purchased or produced and used exclusively by Digital Systems.

Sony/Tek (SC):

An item purchased or produced by Sony/Tek for use exclusively in Sony/Tek production.

Obsolescent (OT):

An instrument no longer produced which is in the process of going through the Corporate Instrument Phase-Out Program. Upon completion of the program, (when the Bill of Materials has been purged), the status will change to OB. This is an interim status used to identify the backlog of products being cleaned up on the new Phase-Out Program. It will not be needed once the backlog has been completed.

Modified Part (MP):

Number picked up for MODS.

Last Supply Current (LR):

No more parts will be purchased after these are gone.

Last Supply Customer (LS):

No more parts will be purchased after these are gone.

CONVERSION TABLE

INCH FRACTIONS AND DECIMALS TO MILLIMETER EQUIVALENTS

INCHES		mm
FRACTION	DECIMAL	
---	.0004	.010
---	.0010	.025
---	.0039	.100
---	.0050	.127
---	.0079	.200
---	.0098	.250
---	.0100	.254
---	.0118	.300
1/64	.0156	.397
---	.0157	.400
---	.0197	.500
---	.0236	.600
---	.0250	.635
---	.0276	.700
---	.0295	.750
1/32	.0313	.794
---	.0315	.800
---	.0354	.900
---	.0394	1.000
3/64	.0469	1.191
---	.0472	1.200
---	.0500	1.270
---	.0551	1.400
---	.0591	1.500
1/16	.0625	1.588
---	.0669	1.700
---	.0750	1.905
5/64	.0781	1.984
---	.0787	2.000
---	.0906	2.300
3/32	.0938	2.381
---	.0984	2.500
---	.1000	2.540
---	.1024	2.600
7/64	.1093	2.776
---	.1181	3.000
1/8	.1250	3.175
---	.1378	3.500
9/64	.1406	3.572
5/32	.1563	3.969
---	.1575	4.000
11/64	.1719	4.366
---	.1772	4.500
3/16	.1875	4.763
---	.1969	5.000
---	.2000	5.080
13/64	.2031	5.159
---	.2165	5.500
7/32	.2188	5.556
15/64	.2344	5.953
---	.2362	6.000
1/4	.2500	6.350
---	.2559	6.500
17/64	.2656	6.747
---	.2756	7.000
9/32	.2813	7.144
---	.2953	7.500
19/64	.2969	7.541

INCHES		mm
FRACTION	DECIMAL	
---	.3000	7.620
5/16	.3125	7.938
---	.3150	8.000
21/64	.3281	8.334
---	.3346	8.500
11/32	.3438	8.731
---	.3543	9.000
23/64	.3594	9.128
---	.3740	9.500
3/8	.3750	9.525
25/64	.3906	9.922
---	.3937	10.000
---	.4000	10.160
13/32	.4062	10.319
---	.4134	10.500
27/64	.4219	10.716
---	.4331	11.000
7/16	.4375	11.113
29/64	.4531	11.509
15/32	.4688	11.906
---	.4724	12.000
31/64	.4844	12.303
---	.4921	12.500
1/2	.5000	12.700
---	.5118	13.000
33/64	.5156	13.097
17/32	.5326	13.494
---	.5315	13.500
35/64	.5469	13.891
---	.5512	14.000
9/16	.5625	14.288
---	.5710	14.500
37/64	.5781	14.684
---	.5906	15.000
19/32	.5938	15.081
---	.6000	15.240
39/64	.6094	15.478
---	.6103	15.500
5/8	.6250	15.875
---	.6299	16.000
41/64	.6406	16.272
---	.6496	16.500
21/32	.6563	16.669
---	.6693	17.000
43/64	.6719	17.066
11/16	.6875	17.463
---	.6890	17.500
---	.7000	17.780
45/64	.7031	17.859
---	.7087	18.000
23/32	.7188	18.256
---	.7283	18.500
47/64	.7344	18.653
---	.7480	19.000
3/4	.7500	19.050
49/64	.7656	19.447
---	.7677	19.500
25/32	.7813	19.844

INCHES		mm
FRACTION	DECIMAL	
---	.7874	20.000
51/64	.7969	20.241
13/16	.8125	20.638
---	.8268	21.000
53/64	.8281	21.034
27/32	.8438	21.431
55/64	.8594	21.828
---	.8662	22.000
7/8	.8750	22.225
57/64	.8906	22.622
---	.9000	22.860
---	.9055	23.000
29/32	.9063	23.019
59/64	.9219	23.416
15/16	.9375	23.813
---	.9449	24.000
61/64	.9531	24.209
31/32	.9688	24.606
---	.9843	25.000
1	1.0000	25.400
---	1.0240	26.000
1-1/16	1.0620	26.988
---	1.0630	27.000
---	1.1020	28.000
1-1/8	1.1250	28.575
---	1.1420	29.000
---	1.1810	30.000
1-3/16	1.1880	30.160
---	1.2210	31.000
1-1/4	1.2500	31.750
---	1.2600	32.000
---	1.2990	33.000
1-5/16	1.3120	33.340
---	1.3390	34.000
1-3/8	1.3750	34.930
---	1.3780	35.000
---	1.4170	36.000
1-7/16	1.4380	36.510
---	1.4570	37.000
---	1.4960	38.000
1-1/2	1.5000	38.100
---	1.5350	39.000
1-9/16	1.5620	39.690
---	1.5750	40.000
---	1.6140	41.000
1-5/8	1.6250	41.280
---	1.6540	42.000
1-11/16	1.6880	42.860
---	1.6930	43.000
---	1.7320	44.000
1-3/4	1.7500	44.450
---	1.7720	45.000
---	1.8110	46.000
1-13/16	1.8130	46.040
---	1.8500	47.000
1-7/8	1.8750	47.630
---	1.8900	48.000
---	1.9290	49.000

INCHES		mm
FRACTION	DECIMAL	
---	1.969	50.000
2	2.000	50.800
2-1/8	2.125	54.000
---	2.165	55.000
2-1/4	2.250	57.200
---	2.362	60.000
2-3/8	2.375	60.300
2-1/2	2.500	63.500
---	2.559	65.000
2-5/8	2.625	66.700
2-3/4	2.750	69.900
---	2.756	70.000
2-7/8	2.875	73.000
---	2.953	75.000
3	3.000	76.200
---	3.150	80.000
3-1/4	3.250	82.600
---	3.346	85.000
3-1/2	3.500	88.900
---	3.543	90.000
---	3.740	95.000
3-3/4	3.750	95.300
---	3.937	100.000
4	4.000	101.600
---	4.331	110.000
4-1/2	4.500	114.300
---	4.724	120.000
5	5.000	127.000
---	5.118	130.000
5-1/2	5.500	139.700
---	5.512	140.000
---	5.906	150.000
6	6.000	152.400
---	6.299	160.000
6-1/2	6.500	165.100
7	7.000	177.800
---	7.087	180.000
7-1/2	7.500	190.500
---	7.874	200.000
8	8.000	203.200
8-1/2	8.500	215.900
---	8.661	220.000
9	9.000	228.600
---	9.449	240.000
9-1/2	9.500	241.300
---	9.843	250.000
10	10.000	254.000
---	10.236	260.000
11	11.000	279.400
---	11.024	280.000
---	11.811	300.000
12	12.000	304.800
13	13.000	330.200
---	13.780	350.000
14	14.000	355.600
15	15.000	381.000
---	15.748	400.000
16	16.000	406.400

0

EVALUATION ENGINEER - BUYER LIST

COMPONENT	COMPONENT ENGINEER	EXT.	PART NUMBER(S)	DIVISION	BUYER	
ABSORBERS, RF	Phil Lee	2474	348-0000-00	DAD	Allstott, Ron	3H
ACTUATOR ASSEMBLIES, PUSHBUTTON	Jim Deer	2484	263-0000-00	DAD	Elliott, Dave	3Y
ADAPTERS, ELECTRICAL, GR CONNECTORS, PROBES	Phil Lee	2474	010-0000-00 013-0000-00 132-0000-00	Central Electro-Mechanical DAD	Strand, Karel Elliott, Dave	05, 1P 3Y
ADHESIVES	Katherine Dennett	2314	006-0000-00	DAD	Allstott, Ron	3H
ANGLES	Katherine Dennett	2314	122-0000-00	DAD	Allstott, Ron	3H
ALUMINUM	Bella Geotina	2315	251-0000-00	EMCM, Beaverton	Fink, Dennis	06, 3A
ATTENUATORS	Phil Lee	2474	011-0000-00 015-0000-00 017-0000-00	Central Electro-Mechanical DAD	Strand, Karel Elliott, Dave	05, 1P 3Y
BAFFLES, AIR	John Thomas	2466	378-0000-00	Central Electro-Mechanical DAD	Elle, Dave Elliott, Dave	24, 1F, 3E 3Y
BANDS, MARKING	Bella Geotina	2315	334-0000-00	Central Electro-Mechanical DAD IDD	Webb, Sharon Hoffmeister, Marge Stanton, Doug	25, 3V, 33 39 35
BARS, METAL	Bella Geotina	2315	381-0000-00			
BATTERIES	Byron Witt	2479	146-0000-00	Central Electro-Mechanical DAD	Webb, Sharon Elliott, Dave	25, 3V, 33 3Y
BEARINGS	John Thomas	2466	401-0000-00	Central Electro-Mechanical DAD IDD	Elle, Dave Hoffmeister, Marge Wacha, Vicki	24, 1F, 3E 39 4G
BELTS (PULLIES)	John Thomas	2466	214-0000-00	Central Electro-Mechanical DAD IDD	Elle, Dave Allstott, Ron Stanton, Doug	24, 1F, 3E 3H 35
BEZELS (ACCESSORIES)	Dennis Johnson	2471	014-0000-00 200-0000-00			
BLADDERS	John Thomas	2466	214-0000-00 341-0000-00			
BLADES, SHUTTER	Katherine Dennett	2314	122-0000-00			
BLOCKS	Byron Witt	2479	391-0000-00			
BOARDS, TERMINAL	Phil Lee	2474	392-0000-00			
BODY (CONNECTORS)	Joe Reshey	2313	204-0000-00	Central Electro-Mechanical DAD	Strand, Karel Elliott, Dave	05, 1P 3Y
BOLTS	Kelly Cushing	2461	214-0000-00	DAD EMCM, Beaverton	Allstott, Ron Collier, Bob	3H 4F
BOXES	Byron Witt	2479	202-0000-00			
BRACES	Katherine Dennett	2314	122-0000-00	DAD	Allstott, Ron	3H
BRACKETS	John Thomas	2466	406-0000-00 407-0000-00	DAD	Allstott, Ron	3H
BRASS	Bella Geotina	2315	251-0000-00	EMCM, Beaverton	Fink, Dennis	06, 3A
BRONZE	Bella Geotina	2315	258-0000-00	EMCM, Beaverton	Fink, Dennis	06, 3A
BRUSHES, MOTOR	John Thomas	2466	147-0000-00	DAD	Elliott, Dave	3H
BUMPERS	Kelly Cushing	2461	348-0000-00	Central Electro-Mechanical DAD	Elle, Dave Allstott, Ron	24, 1F, 3E 3H
BUSHINGS	John Thomas	2466	358-0000-00	Central Electro-Mechanical DAD	Elle, Dave Hoffmeister, Marge	24, 1F, 3E 39
BUTTONS, PLUG	Kelly Cushing	2461	134-0000-00	Central Electro-Mechanical DAD	Elle, Dave Allstott, Ron	24, 1F, 3E 3H
CABINET PARTS	Katherine Dennett	2314	386-0000-00 387-0000-00 390-0000-00	DAD	Allstott, Ron	3H
CABLE ASSEMBLIES (BULK & WIRE)	Elizabeth Doolittle	1751	175-0000-00	Central Electro-Mechanical DAD VCM, Vancouver	Strand, Karel Elliott, Dave Gardner, Don	05, 1P 3Y 08, 2R

EVALUATION ENGINEER - BUYER LIST

COMPONENT	COMPONENT ENGINEER	EXT.	PART NUMBER(S)	DIVISION	BUYER	BUYER NO.
CABLES, GPIB	Phil Lee	2474	012-0000-00	Central Electro-Mechanical DAD	Strand, Karel Elliott, Dave	05, 1P 3Y
CABLES, RF	Phil Lee	2474	175-0000-00	Central Electro-Mechanical DAD VCM, Vancouver	Strand, Karel Elliott, Dave Gardner, Don	05, 1P 3Y 08, 2R
CABLES, ELECTRICAL ADAPTERS	Phil Lee	2474	012-0000-00	Central Electro-Mechanical DAD	Strand, Darel Elliott, Dave	05, 1P 3Y
CABLES, POWER	Dennis Johnson	2471	161-0000-00	Central Electro-Mechanical DAD	Wilkins, Rob Elliott, Dave	1B, 31 3Y
CABLES, NIPPLE	Jim Deer	2484	200-0000-00			
CAMS	John Thomas	2466	401-0000-00			
CANS	Byron Witt	2479	202-0000-00			
CAPS	Kelly Cushing	2461	200-0000-00			
CAPACITORS						
Aluminum, Tantalum Ceramic	Harry Tanielian Ray Powell	2545 2550	290-0000-00 281-0000-00 283-0000-00	Central, Passive Components DAD	Frank, Harriet Ware, Donna	1C, 12 3Z
Film, Electrolytic Variable, Mica	Harry Tanielian Louis Mahn	2545 2549	290-0000-00 281-0000-00 283-0000-00			
Tek-Made (Capacitors)	Jim Manuel	4442	291-0000-00			
CASES	Byron Witt	2479	202-0000-00	DAD	Allstott, Ron	3H
CASES, CARRYING	Byron Witt	2479	016-0000-00	EMCM, Beaverton, S2M	Pearce, Chuck	19, 1G
CASTERS	Kelly Cushing	2461	401-0000-00	Central Electro-Mechanical DAD	Webb, Sharon Hoffmeister, Marge	25, 3V, 33 39
CATCHES	Paul Johnson	2473	105-0000-00	Central Electro-Mechanical DAD	Elle, Dave Hoffmeister, Marge	24, 1F, 3E 39
CERAMIC, BULK & MATERIALS	Katherine Dennett	2314	256-0000-00	Technology Group	Stucki, Ken	20
CERAMIC PARTS	Bob Rodgers	3971	166-0000-00 204-0000-00 214-0000-00 307-0000-00 342-0000-00 358-0000-00 361-0000-00 377-0000-00 381-0000-00	Technology Group	Perkins, Kathy	5N, 5F
CHAINS	John Thomas	2466	214-0000-00	Central Electro-Mechanical DAD IDD	Elle, Dave Hoffmeister, Marge Stanton, Doug	24, 1F, 3E 39 35
CHEMICALS	Katherine Dennett	2314	006-0000-00	EMCM, Beaverton	Balsillie, Doug	29, 3K
CIRCUIT BREAKERS	Paul Johnson	2473	260-0000-00	DAD	Elliott, Dave	3Y
CLAMPS	Paul Johnson	2473	343-0000-00	Central Electro-Mechanical DAD	Elle, Dave Hoffmeister, Marge	24, 1F, 3E 39
CLIPS	Paul Johnson	2473	344-0000-00	Central Electro-Mechanical DAD	Elle, Dave Hoffmeister, Marge	24, 1F, 3E 39
COATINGS	Katherine Dennett	2314	006-0000-00 252-0000-00 256-0000-00 439-0000-00	EMCM, Beaverton	Balsillie, Doug	29, 3K
COILS						
Purchased	John Thomas	2466	108-0000-00 114-0000-00	IDD	Wetzler, Ron	1A
Tek-Made	Doug Gordon	4414	276-0000-00	Central Electro-Mechanical DAD	Webb, Sharon Elliott, Dave	25, 3V, 33 3Y
COLLARS, CABLE	Jim Deer	2484	214-0000-00 343-0000-00			
CONNECTORS	Phil Lee Joe Reshey Kelly Cushing	2474 2313 2461	131-0000-00 132-0000-00	Central Electro-Mechanical DAD	Strand, Karel Elliott, Dave	05, 1P 3Y

EVALUATION ENGINEER - BUYER LIST

COMPONENT	COMPONENT ENGINEER	EXT.	PART NUMBER(S)	DIVISION	BUYER	BUYER NO.
CONTACTS	Phil Lee Joe Reshey Kelly Cushing	2474 2313 2461	131-0000-00 214-0000-00	Central Electro-Mechanical DAD	Strand, Karel Elliott, Dave	05, 1P 3Y
COPPER	Bella Geotina	2315	251-0000-00 258-0000-00	EMCM, Beaverton	Fink, Dennis	06, 3A
CORDS, LACING	Bella Geotina	2315	253-0000-00	EMCM, Beaverton, S^2M	Pearce, Chuck	19, 1G
CORES	Byron Witt	2479	276-0000-00	EMCM, Beaverton, S^2M	Pearce, Chuck	19, 1G
COUNTERS	Dennis Johnson	2471	331-0000-00	DAD	Ware, Donna	3Z
COUPLINGS	Jim Deer	2484	376-0000-00	Central Electro-Mechanical DAD	Elle, Dave Elliott, Dave	24, 1F, 3 3Y
COVERS	Byron Witt	2479	016-0000-00 200-0000-00	EMCM, Beaverton, S^2M	Pearce, Chuck	19, 1G
CRT's	John Thomas	2466	154-0000-00	IDD DAD	Wetzler, Ron Elliott, Dave	1A 3Y
CRYSTALS	Byron Witt	2479	158-0000-00			
CUPS	Byron Witt	2479	201-0000-00			
CUSHIONS	Katherine Dennett	2314	348-0000-00	Central Electro-Mechanical EMCM, Beaverton, S^2M	Elle, Dave Pearce, Chuck	24, 1F, 3 19, 1G
DELAY LINES	Byron Witt	2479	015-0000-00 119-0000-00 175-0000-00	Central, Passive Components Central, Passive Components DAD	Ross, Glenn Webb, Sharon Ware, Donna	03, 1D 25 3Z
DIALS	Dennis Johnson	2471	331-0000-00	Central, Passive Components DAD	Ware, Donna	3Z
DIE CASTINGS, FRAMES, FRONT PANELS	Katherine Dennett	2314	426-0000-00	IDD DAD EMCM, Beaverton	Wacha, Vicki Allstott, Ron Collier, Bob	4G 3H 4R
DIODES Optoelectronics (See LED's) High Frequency 4-Layer All Others	 Alan LaValle Steve Fierro Paul Johnson Steve Fierro	 2317 2308 2473 2308	 150-0000-00 152-0000-00 153-0000-00 156-0000-00	DAD	Ware, Donna	3Z
DISKS	Kelly Cushing	2461	214-0000-00	Central Electro-Mechanical DAD	Elle, Dave Elliott, Dave	24, 1F, 3E 3Y
DISPLAYS	Alan LaValle	2317	150-0000-00	DAD	Ware, Donna	3Z
DOORS	Paul Johnson	2473	200-0000-00	Central Electro-Mechanical DAD	Elle, Dave Allstott, Ron	24, 1F, 3E 3H
DRUMS	Paul Johnson	2473	105-0000-00	Central Electro-Mechanical	Elle, Dave	24, 1F, 3E
ELECTRIC COMPONENTS, MISCELLANEOUS Computer & Peripherals	Jim Deer	2484	119-0000-00	IDD DAD	Wetzler, Ron Seed, Jim	1A 1H, 4H
EXTENSION SHAFTS	Jim Deer	2484	384-0000-00	Central Electro-Mechanical IDD DAD	Elle, Dave Wacha, Vicki Allstott, Ron	24, 1F, 3E 4G 3H
EYELETS	Kelly Cushing	2461	210-0000-00	Central Electro-Mechanical DAD	Elle, Dave Hoffmeister, Marge	24, 1F, 3E 39
FANS	John Thomas	2466	119-0000-00	Central Electro-Mechanical DAD	Webb, Sharon Elliott, Dave	25, 3V, 33 3Y
FASTENERS	Kelly Cushing	2461	214-0000-00	Central Electro-Mechanical DAD	Elle, Dave Hoffmeister, Marge	24, 1F, 3E 39
FELT (BULK)	Katherine Dennett	2314	252-0000-00	EMCM, Beaverton, S^2M	Pearce, Chuck	19, 1G
FERRITES (CORES)	Bella Geotina	2315	276-0000-00	EMCM, Beaverton, S^2M	Pearce, Chuck	19, 1G
FET's	Jerry Willard	2539	151-0000-00	Technology Group	Stucki, Ken	20
FIBER OPTICS	Louis Mahn	2549	253-0000-00			
FILM, ID	Bella Geotina	2315	334-0000-00			
FILM, PLASTIC	Bella Geotina	2315	255-0000-00	EMCM, Beaverton, S^2M VCM, Vancouver	Pearce, Chuck Lader, Billie	19, 1G 24, 2P

EVALUATION ENGINEER - BUYER LIST

COMPONENT	COMPONENT ENGINEER	EXT.	PART NUMBER(S)	DIVISION	BUYER	BUYER NO.
FILTERS						
Air	John Thomas	2466	378-0000-00	EMCM, Beaverton, S^2M	Pearce, Chuck	19, 1G
Crystal & Saw	Byron Witt	2479		Central Electro-Mechanical	Webb, Sharon	25, 3V, 33
Light	Louis Mahn	2549		Central Electro-Mechanical	Elle, Dave	24, 1F, 3E
Line	Dennis Johnson	2471	119-0000-00	Central, Passive Components DAD	Lemas, Dave Elliott, Dave	03, 1D 3Y
FLANGES	Katherine Dennett	2314	386-0000-00	DAD	Hoffmeister, Marge	39
FLIP-STANDS, CAB	Katherine Dennett	2314	348-0000-00	Central Electro-Mechanical DAD	Elle, Dave Allstott, Ron	24, 1F, 3E 3H
FLUXES	Bella Geotina	2315	006-0000-00 252-0000-00 256-0000-00	EMCM, Beaverton	Balsillie, Doug	29, 3K, 1L
FOOT	Kelly Cushing	2461	348-0000-00	EMCM, Beaverton, S^2M	Pearce, Chuck	19, 1G
FRAME & FRAME SECTION/PANELS	Katherine Dennett	2314	014-0000-00 426-0000-00	DAD	Allstott, Ron	3H
FRONT PANELS (ANODIZED)	Katherine Dennett	2314	426-0000-00	DAD	Allstott, Ron	3H
FUSES & FUSE HOLDERS	Dennis Johnson	2471	159-0000-00	Central Electro-Mechanical DAD	Strand, Karel Elliott, Dave	05, 1P 3Y
GASKETS	Katherine Dennett	2314	214-0000-00 348-0000-00	Central Electro-Mechanical IDD	Elle, Dave Stanton, Doug	24, 1F, 3E 35
GEARS	John Thomas	2466	214-0000-00 401-0000-00	Central Electro-Mechanical IDD	Elle, Dave Stanton, Doug	24, 1F, 3E 35
GPIB CABLES	Phil Lee	2474	012-0000-00	Central Electro-Mechanical DAD	Strand, Karel Elliott, Dave	05, 1P 3Y
GRILLES (FANS, ETC.)	John Thomas	2466	378-0000-00	Central Electro-Mechanical DAD	Elle, Dave Hoffmeister, Marge	24, 1F, 3E 39
GRIPS	Paul Johnson	2473	367-0000-00	Central Electro-Mechanical DAD	Elle, Dave Allstott, Ron	24, 1F, 3E 3H
GROMMETS	Kelly Cushing	2461	348-0000-00	EMCM, Beaverton, S^2M Central Electro-Mechanical DAD	Pearce, Chuck Elle, Dave Hoffmeister, Marge	19, 1G 24, 1F, 3E 39
GUARDS	John Thomas	2466	200-0000-00	Central Electro-Mechanical DAD	Elle, Dave Allstott, Ron	24, 1F, 3E 3H
GUIDES	John Thomas	2466	351-0000-00	DAD	Allstott, Ron	3H
HAND GRIPS	Paul Johnson	2473	367-0000-00	Central Electro-Mechanical DAD	Elle, Dave Allstott, Ron	24, 1F, 3E 3H
HAND TOOLS	Kelly Cushing	2461	003-0000-00	DAD	Hoffmeister, Marge	39
HANDLES	Paul Johnson	2473	367-0000-00	Central Electro-Mechanical DAD	Elle, Dave Allstott, Ron	24, 1F, 3E 3H
HARDWARE (WASHERS, NUTS, SCREWS)	Kelly Cushing	2461	214-0000-00	Central Electro-Mechanical DAD	Elle, Dave Hoffmeister, Marge	24, 1F, 3E 39
HEADERS	Kelly Cushing	2461	131-0000-00	Central Electro-Mechanical Technology Group	Strand, Karel Stucki, Ken	05, 1P 20
HEAT SINKS	Jim Williamson	2552	214-0000-00 342-0000-00	Central Electro-Mechanical EMCM, Beaverton	Elle, Dave Fink, Dennis	24, 1F, 3E 06, 3A
HINGES	Byron Witt	2479	214-0000-00	Central Electro-Mechanical DAD IDD	Elle, Dave Allstott, Ron Stanton, Doug	24, 1F, 3E 3H 35
HOLDERS	Joe Reshey	2313	352-0000-00	DAD	Allstott, Ron	3H
HOLDERS, LAMPS	Jim Deer	2484	352-0000-00	Central Electro-Mechanical DAD	Strand, Karel Elliott, Dave	05, 1P 3Y
HOUSINGS	John Thomas	2466	380-0000-00			
HUBS	John Thomas	2466	401-0000-00			
IMPELLERS (AIR, FAN)	John Thomas	2466	369-0000-00			
INDUCTORS	John Thomas	2466	108-0000-00	Central, Passive Components DAD	Lemas, Dave Elliott, Dave	03, 1D 3Y
INSERTS	Kelly Cushing	2461	377-0000-00	Central Electro-Mechanical DAD	Elle, Dave Allstott, Ron	24, 1F, 3E 3H

EVALUATION ENGINEER - BUYER LIST

COMPONENT	COMPONENT ENGINEER	EXT.	PART NUMBER(S)	DIVISION	BUYER	BUYER NO.
INSULATION SLEEVING	Bella Geotina	2315	162-0000-00	EMCM, Beaverton, S^2M	Pearce, Chuck	19, 1G
INSULATORS	Bella Geotina	2315	214-0000-00 342-0000-00	Central Electro-Mechanical DAD	Elle, Dave Allstott, Ron	24, 1F, 3E 3H
INTEGRATED CIRCUITS (See MICROCIRCUITS)						
INTERFACE UNITS	Phil Lee	2474	021-0000-00			
JACKS	Phil Lee	2474	131-0000-00	Central Electro-Mechanical DAD	Strand, Karel Elliott, Dave	05, 1P 3Y
KEYS (CONNECTORS, LOCKS)	Kelly Cushing	2461	214-0000-00	Central Electro-Mechanical DAD	Elle, Dave Elliott, Dave	24, 1F, 3E 3Y
KEYBOARDS	Jim Deer	2484	334-0000-00	IDD DAD	etzler, Ron Allstott, Ron	1A 3H
KNOBS	Kelly Cushing	2461	366-0000-00	Central Electro-Mechanical IDD DAD	Elle, Dave Stanton, Doug Allstott, Ron	24, 1F, 3E 35 3H
KNOBS, DIAL ASSEMBLY	Kelly Cushing	2461	366-0000-00	Central Electro-Mechanical DAD	Elle, Dave Allstott, Ron	24, 1F, 3E 3H
KNOB SKIRTS	Kelly Cushing	2461	354-0000-00	DAD	Allstott, Ron	3H
LABELS, ID MARKERS, OVERLAYS	Katherine Dennett	2314	334-0000-00	Central Electro-Mechanical IDD DAD	Webb, Sharon Stanton, Doug Hoffmeister, Marge	25, 3V, 33 35 39
LACING CORDS, THREAD, ETC. (BULK)	Bella Geotina	2315	006-0000-00	EMCM, Beaverton, S^2M	Pearce, Chuck	19, 1G
LAMPS	Jim Deer	2484	150-0000-00	Central Electro-Mechanical DAD	Strand, Karel Elliott, Dave	05, 1P 3Y
LAMP HOLDERS	Jim Deer	2484	150-0000-00	Central Electro-Mechanical DAD	Strand, Karel Elliott, Dave	05, 1P 3Y
LATCHES (FORMED)	Paul Johnson	2473	105-0000-00 210-0000-00 213-0000-00 214-0000-00	Central Electro-Mechanical DAD	Elle, Dave Allstott, Ron	24, 1F, 3E 3H
LEADS (FORMED)	Katherine Dennett	2314	135-0000-00	Central Electro-Mechanical DAD Technology Group	Elle, Dave Elliott, Dave Brown, Bill	24, 1F, 3E 3Y 1Y
LED's (LIGHT EMITTING DIODES) Infared IR Detectors and Emitters Visible	 Louis Mahn Louis Mahn Alan LaValle	 2549 2549 2317	 136-0000-00 150-0000-00	DAD	Ware, Donna	3Z
LENS (CAMERA)	Katherine Dennett	2314	124-0000-00	DAD	Elliott, Dave	3Y
LENS (INDICATOR LIGHT)	Jim Deer	2484	378-0000-00	DAD	Elliott, Dave	3Y
LEVERS	Kelly Cushing	2461	214-0000-00	Central Electro-Mechanical	Elle, Dave	24, 1F, 3E
LIDS	Kelly Cushing	2461	200-0000-00			
LIGHT INDICATORS	Jim Deer	2484	136-0000-00 150-0000-00	Central Electro-Mechanical DAD	Strand, Karel Elliott, Dave	05, 1P 3Y
LINKS, TERMINAL CONNECTORS	Phil Lee Joe Reshey	2474 2313	131-0000-00	DAD	Elliott, Dave	3Y
LOCKS	Kelly Cushing	2461	214-0000-00	Central Electro-Mechanical DAD	Elle, Dave Hoffmeister, Marge	24, 1F, 3E 39
LOCK WASHERS	Kelly Cushing	2461	210-0000-00	Central Electro-Mechanical	Elle, Dave Hoffmeister, Marge	24, 1F, 3E 39
MASKS, GRATICULE	Katherine Dennett	2314	331-0000-00			
METERS	Dennis Johnson	2471	149-0000-00	Central Electro-Mechanical	Webb, Sharon	25, 3V, 33

EVALUATION ENGINEER - BUYER LIST

COMPONENT	COMPONENT ENGINEER	EXT.	PART NUMBER(S)	DIVISION	BUYER	BUYER NO.
MICROCIRCUITS						
Analog CCD	Jerry Willard	2539	156-0000-00	Central, Active Components DAD	Roussos, George Ware, Donna	3P, 4C, 09 3Z
Analog Switches	Jerry Willard	2539		Central, Active Components DAD	Roussos, George Ware, Donna	3P, 4C, 09 3Z
AS, ALSTTL, FAST	John Higley	2573		Central, Active Components DAD	Lewis, Peggy Ware, Donna	1X 3Z
Bit Slice	Ken Smith	2319		Central, Active Components DAD	Roussos, George Ware, Donna	3P, 4C, 09 3Z
Bubble Memory & Controllers	Pat Emmons	2009		Central, Active Components DAD	Roussos, George Ware, Donna	3P, 4C, 09 3Z
CMOS	Wilton Hart	2572		Central, Active Components Central, Active Components DAD	Roussos, George Lewis, Peggy Ware, Donna	3P, 4C, 09 1X 3Z
Communications Circuits	Matt Porter	2311		Central, Active Components DAD	Roussos, George Ware, Donna	3P, 4C, 09 3Z
Comparators	Jim Williamson	2552		Central, Active Components DAD	Roussos, George Ware, Donna	3P, 4C, 09 3Z
D/A Converters	Matt Porter	2311		Central, Active Components DAD	Roussos, George Ware, Donna	3P, 4C, 09 3Z
A/D Converters, DVM Devices	Matt Porter	2311		Central, Active Components DAD	Roussos, George Ware, Donna	3P, 4C, 09 3Z
DRAM's and Controllers	Jim McKay	2557		Central, Active Components DAD	Roussos, George Ware, Donna	3P, 4C, 09 3Z
DTL	Abe Ghahyasi	2319		DAD	Ware, Donna	3Z
EAROM's	Jim McKay	2557		Central, Active Components Central, Active Components DAD	Roussos, George Lewis, Peggy Ware, Donna	3P, 4C, 09 1X 3Z
ECL	Joseph Paretn	2573		Central, Active Components Central, Active Components DAD	Roussos, George Lewis, Peggy Ware, Donna	3P, 4C, 09 1X 3Z
EEPROM's	Pat Emmons	2009		Central, Active Components DAD	Roussos, George Ware, Donna	3P, 4C, 09 3Z
Error Correcting Chips	Jim McKay	2557		Central, Active Components DAD	Roussos, George Ware, Donna	3P, 4C, 09 3Z
Flexible Diskette Controllers	John Higley	2573		Central, Active Components DAD	Roussos, George Ware, Donna	3P, 4C, 09 3Z
GPIB Interface & Buss Drivers	Ken Smith	2319		Central, Active Components DAD	Roussos, George Ware, Donna	3P, 4C, 09 3Z
Graphic Display Controllers/CRT	Pete Lancashire	2566		Central, Active Components DAD	Roussos, George Ware, Donna	3P, 4C, 09 3Z
High Speed Logic						
ECL	Joseph Parent	2573		Central, Active Components Central, Active Components DAD	Roussos, George Lewis, Peggy Ware, Donna	3P, 4C, 09 1X 3Z
Schottky, AS, ALS, FAST	John Higley	2573		Central, Active Components DAD	Lewis, Peggy Ware, Donna	1X 3Z
Line Drivers & Receivers	Ken Smith	2319		Central, Active Components DAD	Roussos, George Ware, Donna	3P, 4C, 09 3Z
Linear	Gary Sargeant	2540		Central, Active Components DAD	Roussos, George Ware, Donna	3P, 4C, 09 3Z
Logic (Field Programmable)	Pat Emmons	2009		Central, Active Components DAD	Roussos, George Ware, Donna	3P, 4C, 09 3Z
Logic (Mask Programmable)	Abe Ghahyasi	2319		Central, Active Components DAD	Roussos, George Ware, Donna	3P, 4C, 09 3Z
Low Power Logic						
CMOS	Wilton Hart	2572		Central, Active Components Central, Active Components DAD	Roussos, George Lewis, Peggy Ware, Donna	3P, 4C, 09 1X 3Z
LSTTL	John Higley	2316		Central, Active Components DAD	Lewis, Peggy Ware, Donna	1X 3Z

EVALUATION ENGINEER - BUYER LIST

COMPONENT	COMPONENT ENGINEER	EXT.	PART NUMBER(S)	DIVISION	BUYER	BUYER NO.
MICROCIRCUITS (CONTINUED)						
Memories (Electrically Alterable Non-Volatile)	Jim McKay	2557	156-0000-00	Central, Active Components DAD	Roussos, George Ware, Donna	3P, 4C, 09 3Z
MOS	Joseph Parent	2573		Central, Active Components DAD	Roussos, George Ware, Donna	3P, 4C, 09 3Z
Op Amps	Jim Williamson Gary Sargeant	2552 2540		Central, Active Components DAD	Roussos, George Ware, Donna	3P, 4C, 09 3Z
PROM's, EPROM's & MROM's	Pat Emmons	2009		Central, Active Components Central, Active Components DAD	Roussos, George Lewis, Peggy Ware, Donna	3P, 4C, 09 1X 3Z
Peripherals	Ken Smith	2319		Central, Active Components DAD	Roussos, George Ware, Donna	3P, 4C, 09 3Z
Process Analysis	Joseph Parent	2573		DAD	Ware, Donna	3Z
RAM's (Dynamic)	Jim McKay	2557		Central, Active Components DAD	Roussos, George Ware, Donna	3P, 4C, 09 3Z
RAM's (Static, Bipolar)	John Bossett	2541		Central, Active Components DAD	Roussos, George Ware, Donna	3P, 4C, 09 3Z
RAM's (Static, MOS)	Pat Emmons	2009		Central, Active Components DAD	Roussos, George Ware, Donna	3P, 4C, 09 3Z
RAM's (Non-Volatile)	Jim McKay	2557		Central, Active Components DAD	Roussos, George Ware, Donna	3P, 4C, 09 3Z
RAM's (Pseudo Static)	Pat Emmons	2009		Central, Active Components DAD	Roussos, George Ware, Donna	3P, 4C, 09 3Z
Regulators, Linear	Steve Fierro	2308		Central, Active Components DAD	Roussos, George Ware, Donna	3P, 4C, 09 3Z
Regulators, Switching	Jim Williamson	2552		Central, Active Components DAD	Roussos, George Ware, Donna	3P, 4C, 09 3Z
ROM's (Field Programmable)	Pat Emmons	2009		Central, Active Components DAD	Roussos, George Ware, Donna	3P, 4C, 09 3Z
ROM's (Mask Programmable)	Abe Ghahyasi	2319		Central, Active Components DAD	Roussos, George Ware, Donna	3P, 4C, 09 3Z
Serial & Parallel I/O	Ken Smith	2319		Central, Active Components DAD	Roussos, George Ware, Donna	3P, 4C, 09 3Z
STTL	John Higley	2316		Central, Active Components DAD	Lewis, Peggy Ware, Donna	1X 3Z
Tek-Made / Monolithics	Joe McGrady	1047				
Tek-Made / Hybrids	Bob Stanton	3961				
TTL, RTL, DTL, HTTL, LTTL	Abe Ghahyasi	2319		Central, Active Components DAD	Lewis, Peggy Ware, Donna	1X 3Z
MICROPROCESSORS			156-0000-00	Central, Active Components DAD	Roussos, George Ware, Donna	3P, 4C, 09 3Z
CMOS Microprocessors	Wilton Hart	2572				
Intel, Zilog Microprocessors	Wilton Hart	2572				
Microprocessor Peripherals & Control	Ken Smith	2319				
Motorola Microprocessors	Carle Teale	2567				
6801 Family Microprocessors	John Higley	2316				
8035, 8048 Family Microprocessors	Ken Smith	2319				
Miscellaneous Microprocessors	Carle Teale	2567				
MICROWAVE COMPONENTS	Byron Witt	2479	119-0000-00	DAD	Ware, Donna	3Z
MOTORS & MOTOR BRUSHES	John Thomas	2466	147-0000-00	Central Electro-Mechanical DAD IDD	Webb, Sharon Elliott, Dave Wacha, Vicki	25, 3V, 33 3Y 4G
MOUNTS	Bella Geotina	2315	348-0000-00	Central Electro-Mechanical DAD	Elle, Dave Allstott, Ron	24, 1F, 3E 3H
MULTIPLIERS (HIGH VOLTAGE)	Gary Sargeant	2540	152-0000-00	DAD	Ware, Donna	3Z
NICKEL-BERYLLIUM	Bella Geotina	2315	251-0000-00 258-0000-00	EMCM, Beaverton	Fink, Dennis	06, 3A
NON-METALLIC SHEETS (BULK)	Katherine Dennett	2314	252-0000-00			
NON-METALLIC SHEETS (NOT BULK)	Katherine Dennett	2314	107-0000-00			

EVALUATION ENGINEER - BUYER LIST

COMPONENT	COMPONENT ENGINEER	EXT.	PART NUMBER(S)	DIVISION	BUYER	BUYER NO.
NUTS	Kelly Cushing	2461	210-0000-00 220-0000-00	Central Electro-Mechanical DAD	Elle, Dave Hoffmeister, Marge	24, 1F, 3E 39
OEM REPLACEABLE PARTS	Jim Deer	2484	118-0000-00	DAD IDD	Seed, Jim Scott, Joe	4H, 1H 3N
OPERATING SUPPLIES	Katherine Dennett	2314	006-0000-00	DAD IDD	Hoffmeister, Marge Wacha, Vicki	39 4G
OPTICAL COMPONENTS	Katherine Dennett	2314	122-0000-00	Central Electro-Mechanical DAD	Webb, Sharon Elliott, Dave	25, 3V, 33 3Y
OPTIOSOLATORS	Louis Mahn	2549	156-0000-00 307-0000-00	DAD	Ware, Donna	3Z
OSCILLATORS	Byron Witt	2479	119-0000-00	Central Electro-Mechanical DAD	Webb, Sharon Elliott, Dave	25, 3V, 33 3Y
OVERLAY, PB	Bella Geotina	2315	333-0000-00	DAD	Hoffmeister, Marge	39
PADS	Katherine Dennett	2314	348-0000-00	Central Electro-Mechanical	Elle, Dave	24, 1F, 3E
PAINT, VARNISH (BULK)	Katherine Dennett	2314	362-0000-00			
PANELS (ETCHED & ANODIZED)	Bella Geotina	2315	333-0000-00	DAD	Allstott, Ron	3H
PANELS (NOT ANODIZED)	Katherine Dennett	2314	386-0000-00 387-0000-00	DAD	Allstott, Ron	3H
PAPER (BULK & SHEET)	Katherine Dennett	2314	252-0000-00			
PHOTO COMPONENTS	Katherine Dennett	2314	122-0000-00	Central Electro-Mechanical	Webb, Sharon	25, 3V, 33
PHOTOCOUPLERS & PHOTODIODES	Louis Mahn	2549	150-0000-00	DAD	Elliott, Dave	3Y
PINS	Kelly Cushing	2461	214-0000-00	Central Electro-Mechanical DAD	Elle, Dave Hoffmeister, Marge	24, 1F, 3E 39
PIVOT ARMS	Paul Johnson	2479	367-0000-00	DAD	Allstott, Ron	3H
PLASTICS, MOLDING MATERIALS	Bella Geotina	2315	254-0000-00 256-0000-00	VCM, Vancouver	Lader, Billie	2P, 45
PLASTIC RODS, TUBING, SHEET (BULK)	Bella Geotina	2315	254-0000-00 255-0000-00	EMCM, Beaverton, S^2M	Pearce, Chuck	19, 1G
PLASTIC SHEETS (NOT BULK)	Bella Geotina	2315	254-0000-00 255-0000-00	EMCM, Beaverton, S^2M	Pearce, Chuck	19, 1G
PLATES, ID & INSTRUCTION	Bella Geotina	2315	334-0000-00	Central Electro-Mechanical DAD IDD	Webb, Sharon Hoffmeister, Marge Stanton, Doug	25, 3V, 33 39 35
PLATES, MISCELLANEOUS	Katherine Dennett	2314	386-0000-00 387-0000-00	DAD	Allstott, Ron	3H
PLUGS, TELEPHONE	Kelly Cushing	2461	134-0000-00	Central Electro-Mechanical DAD	Strand, Karel Elliott, Dave	05, 1P 3Y
PLUNGER, SOLENOID	Paul Johnson	2473	119-0000-00	Central Electro-Mechanical DAD	Webb, Sharon Elliott, Dave	25, 3V, 33 3Y
POINTERS	Kelly Cushing	2461	331-0000-00			
POSTS, ELECTRICAL & MECHANICAL	Kelly Cushing	2461	129-0000-00	Central Electro-Mechanical DAD	Elle, Dave Elliott, Dave	24, 1F, 3E 3Y
POTENTIOMETERS	Gene Single	2544	311-0000-00	Central, Passive Components DAD	Ross, Glenn Ware, Donna	03, 1D 3Z
POWER CONNECTORS	Dennis Johnson	2471	131-0000-00	Central Electro-Mechanical DAD	Strand, Karel Elliott, Dave	05, 1P 3Y
POWER CORDS	Dennis Johnson	2471	161-0000-00	Central Electro-Mechanical DAD	Wilkins, Rob Elliott, Dave	31, 1B 3Y
POWER SUPPLIES	Jim Williamson	2552	016-0000-00 119-0000-00	Central Electro-Mechanical DAD	Webb, Sharon Seed, Jim	25, 3V, 33 1H, 4H
PRECIOUS METALS	Bella Geotina	2315	257-0000-00	Technology Group	Stucki, Ken	4M
PROBES	Phil Lee	2474	010-0000-00			
PROTECTIVE COVERS	Byron Witt	2479	200-0000-00			
PULLEYS	John Thomas	2466	214-0000-00 401-0000-00	Central Electro-Mechanical DAD IDD	Elle, Dave Allstott, Ron Stanton, Doug	24, 1F, 3E 3H 35

EVALUATION ENGINEER - BUYER LIST

COMPONENT	COMPONENT ENGINEER	EXT.	PART NUMBER(S)	DIVISION	BUYER	BUYER NO.
PUSHBUTTONS	Jim Deer	2484	366-0000-00	Central Electro-Mechanical DAD IDD	Elle, Dave Allstott, Ron Stanton, Doug	24, 1F, 3E 3H 35
RACKS	Paul Johnson	2473	405-0000-00	DAD	Allstott, Ron	3H
RAILS	Paul Johnson	2473	122-0000-00	DAD	Allstott, Ron	3H
READOUT DEVICES	Alan LaValle	2317	150-0000-00	DAD	Elliott, Dave	3Y
RECEPTACLES						
Connectors	Phil Lee Joe Reshey	2474 2313	131-0000-00 136-0000-00	DAD	Elliott, Dave	3Y
Power	Dennis Johnson	2471		Central Electro-Mechanical	Strand, Karel	05, 1P
REDUCERS (PAINT, VARNISH)	Katherine Dennett	2314	102-0000-00			
REDUCERS, MECHANICAL	Phil Lee	2474	006-0000-00			
RELAYS (MECHANICAL & SOLID STATE)	Paul Johnson	2473	118-0000-00 148-0000-00	Central Electro-Mechanical DAD	Webb, Sharon Elliott, Dave	25, 3V, 33 3Y
RESILIENT MOUNTS	John Thomas	2466	384-0000-00	DAD	Allstott, Ron	3H
RESISTORS						
Fixed (Including Varistors)	Ray Powell	2550	301-0000-00 thru 308-0000-00	DAD	Ware, Donna	3Z
Tek-Made, Fixed Thick Film	Clarence Smith	3985	312-0000-00 thru 325-0000-00			
Tek-Made, Fixed & Variable Wirewound	Jim Manuel	4442	312-0000-00 thru 325-0000-00			
Variable, Panel & Precision & Trimmers (See Potentiometers)	Gene Single	2544	311-0000-00	Central, Passive Components DAD	Skaggs, Michelle Ware, Donna	1E, 28 3Z
RINGS	Kelly Cushing	2461	354-0000-00	Central Electro-Mechanical DAD	Elle, Dave Allstott, Ron	24, 1F, 3E 3H
RINGS, KNOB SKIRT, RETAINING & TRIM	Kelly Cushing	2461	354-0000-00	Central Electro-Mechanical DAD	Elle, Dave Allstott, Ron	24, 1F, 3E 3H
RIVETS	Phil Lee	2474	210-0000-00	Central Electro-Mechanical DAD	Elle, Dave Allstott, Ron	24, 1F, 3E 3H
RODS, MISCELLANEOUS	Bella Geotina	2315	385-0000-00	Central Electro-Mechanical DAD	Elle, Dave Allstott, Ron	24, 1F, 3E 3H
RODS, PINION	Bella Geotina	2315	251-0000-00	Central Electro-Mechanical DAD	Elle, Dave Allstott, Ron	24, 1F, 3E 3H
RODS, SPACING	Kelly Cushing	2461	129-0000-00	Central Electro-Mechanical DAD	Elle, Dave Allstott, Ron	24, 1F, 3E 3H
ROTATING MECHANICAL PARTS	John Thomas	2466	401-0000-00	Central Electro-Mechanical DAD	Elle, Dave Allstott, Ron	24, 1F, 3E 3H
ROTORS, VARIABLE RESISTORS	John Thomas	2466	401-0000-00			
RUBBER (BULK)	Katherine Dennett	2314	252-0000-00	VCM, Vanoucver	Lader, Billie	45, 2D
SCREENS	John Thomas	2466	378-0000-00			
SCREWS	Kelly Cushing	2461	211-0000-00 213-0000-00	Central Electro-Mechanical DAD	Elle, Dave Hoffmeister, Marge	24, 1F, 3E 39
SCR's, SCS's	Paul Johnson	2473	151-0000-00	DAD	Ware, Donna	3Z
SHAFTS	Jim Deer	2484	384-0000-00	Central Electro-Mechanical DAD IDD	Elle, Dave Allstott, Ron Wacha, Vicki	24, 1F, 3E 3H 4G
SHEETS, NON-METALLIC (ALL)	Katherine Dennett	2314	107-0000-00			
SHELLS, KNOBS	Kelly Cushing	2461	366-0000-00	Central Electro-Mechanical DAD	Elle, Dave Allstott, Ron	24, 1F, 3E 3H
SHIELDS (ELECTRICAL & MECHANICAL)	Katherine Dennett	2314	337-0000-00	DAD IDD	Allstott, Ron Wetzler, Ron	3H 1A
SHIELDING GASKETS	Katherine Dennett	2314	348-0000-00	Central Electro-Mechanical DAD IDD	Elle, Dave Allstott, Ron Stanton, Doug	24, 1F, 3E 3H 35

EVALUATION ENGINEER - BUYER LIST

COMPONENT	COMPONENT ENGINEER	EXT.	PART NUMBER(S)	DIVISION	BUYER	BUYER NO.
SHELVES	Kelly Cushing	2461	436-0000-00			
SHIMS	Jim Deer	2484	361-0000-00	Central Electro-Mechanical DAD	Elle, Dave Allstott, Ron	24, 1F, 3E 3H
SHOCK MOUNTS	Katherine Dennett	2314	348-0000-00	Central Electro-Mechanical DAD	Elle, Dave Allstott, Ron	24, 1F, 3E 3H
SILICONE WAFERS	Katherine Dennett	2314	203-0000-00	Technology Group	Brown, Bill	1Y
SLEEVES	Katherine Dennett	2314	166-0000-00			
SLEEVES, MARKING	Bella Geotina	2315	334-0000-00	Central Electro-Mechanical DAD	Webb, Sharon Hoffmeister, Marge	25, 3V, 33 39
SLEEVES, SPACER	Jim Deer	2484	361-0000-00	Central Electro-Mechanical DAD	Elle, Dave Allstott, Ron	24, 1F, 3E 3H
SLEEVING, INSULATION	Bella Geotina	2315	162-0000-00	EMCM, Beaverton, S^2M	Pearce, Chuck	19, 1G
SLIDES	Jim Deer	2484	351-0000-00	Central Electro-Mechanical DAD	Webb, Sharon Allstott, Ron	25, 3V, 33 3H
SLIDES, ASSEMBLY	Jim Deer	2484	361-0000-00	DAD	Allstott, Ron	3H
SOCKETS	Kelly Cushing	2461	136-0000-00	Central Electro-Mechanical DAD	Strand, Karel Elliott, Dave	05, 1P 3Y
SOLDER (BULK)	Bella Geotina	2315	251-0000-00	EMCM, Beaverton	Fink, Dennis	06, 3A
SOLENOIDS	Paul Johnson	2473	119-0000-00	Central Electro-Mechanical DAD	Webb, Sharon Ware, Donna	25, 3V, 33 3Z
SPACERS	Jim Deer	2484	129-0000-00 361-0000-00	Central Electro-Mechanical DAD	Elle, Dave Allstott, Ron	24, 1F, 3E 3H
SPARK GAPS	Paul Johnson	2473	119-0000-00			
SPRINGS	Kelly Cushing	2461	214-0000-00	Central Electro-Mechanical DAD	Elle, Dave Allstott, Ron	24, 1F, 3E 3H
SPROCKET WHEELS	John Thomas	2466	401-0000-00	Central Electro-Mechanical DAD IDD	Elle, Dave Allstott, Ron Stanton, Doug	24, 1F, 3E 3H 35
STAINLESS STEEL	Bella Geotina	2315	251-0000-00	EMCM, Beaverton	Fink, Dennis	06, 3A
STEEL (BULK)	Bella Geotina	2315	251-0000-00	EMCM, Beaverton	Fink, Dennis	06, 3A
STEMS	Kelly Cushing	2461	355-0000-00			
STIFFENERS	Katherine Dennett	2314	386-0000-00			
STOPS	Paul Johnson	2473	105-0000-00			
STRAIN RELIEFS	Jim Deer	2484	358-0000-00	Central Electro-Mechanical DAD	Strand, Karel Allstott, Ron	05, 1P 3H
STRAPS	Kelly Cushing	2461	346-0000-00	Central Electro-Mechanical DAD	Elle, Dave Allstott, Ron	24, 1F, 3E 3H
STRIKES	Paul Johnson	2473	105-0000-00	Central Electro-Mechanical DAD	Elle, Dave Allstott, Ron	24, 1F, 3E 3H
STRIPS (CERAMIC, FELT, TRIM, METAL, RUBBER)	Katherine Dennett	2314	124-0000-00	DAD	Allstott, Ron	3H
STUDS	Kelly Cushing	2461	355-0000-00	Central Electro-Mechanical DAD	Elle, Dave Allstott, Ron	24, 1F, 3E 3H
SUBPANELS	Katherine Dennett	2314	386-0000-00 387-0000-00	DAD	Allstott, Ron	3H
SUBSTRATES	Katherine Dennett	2314	204-0000-00			
SUPPORTS	Katherine Dennett	2314	386-0000-00 387-0000-00	DAD	Allstott, Ron	3H
SWITCHES						
General	Dennis Johnson	2471	260-0000-00	Central Electro-Mechanical DAD	Wilkins, Rob Elliott, Dave	31, 1B 3Y
Reed	Paul Johnson	2473	262-0000-00			
Assembly	Dennis Johnson	2471	263-0000-00			
Key	Dennis Johnson	2471				
Turrett	Dennis Johnson	2471				

EVALUATION ENGINEER - BUYER LIST

COMPONENT	COMPONENT ENGINEER	EXT.	PART NUMBER(S)	DIVISION	BUYER	BUYER NO.
TAGS	Bella Geotina	2315	334-0000-00	Central Electro-Mechanical DAD IDD	Webb, Sharon Hoffmeister, Marge Stanton, Doug	25, 3V, 33 39 35
TAPE	Bella Geotina	2315	253-0000-00			
TERMINAL, BLADES	Kelly Cushing	2461	131-0000-00	DAD	Elliott, Dave	3Y
TERMINAL, BOARDS	Kelly Cushing	2461	392-0000-00	DAD	Elliott, Dave	3Y
TERMINAL LUGS	Kelly Cushing	2461	210-0000-00	Central Electro-Mechanical DAD	Elle, Dave Elliott, Dave	24, 1F, 3E 3Y
TERMINAL PINS	Joe Reshey	2313	131-0000-00	Central Electro-Mechanical DAD	Strand, Karel Elliott, Dave	05, 1P 3Y
TERMINAL STRIPS, CERAMIC	Katherine Dennett	2314	124-0000-00	DAD	Elliott, Dave	3Y
TERMINAL STRIPS	Katherine Dennett	2314	123-0000-00 124-0000-00	DAD	Elliott, Dave	3Y
TERMINATIONS	Phil Lee	2474	011-0000-00 015-0000-00	Central Electro-Mechanical DAD	Strand, Karel Elliott, Dave	05, 1P 3Y
THERMISTORS	Ray Powell	2550	307-0000-00	DAD	Ware, Donna	3Z
THREADS	Bella Geotina	2315	253-0000-00	Central Electro-Mechanical	Elle, Dave	24, 1F, 3E
THUMBSCREWS	Kelly Cushing	2461	213-0000-00 214-0000-00	Central Electro-Mechanical DAD	Elle, Dave Hoffmeister, Marge	24, 1F, 3E 39
THYRISTORS	Paul Johnson	2473	151-0000-00	DAD	Ware, Donna	3Z
TIE PLATES	Paul Johnson	2473	344-0000-00	Central Electro-Mechanical DAD	Elle, Dave Allstott, Ron	24, 1F, 3E 3H
TIE STRIPS	Paul Johnson	2473	124-0000-00	Central Electro-Mechanical DAD	Elle, Dave Allstott, Ron	24, 1F, 3E 3H
TIN (BULK)	Bella Geotina	2315	251-0000-00	EMCM, Beaverton	Fink, Dennis	06, 3A
TIPS, PROBES	Joe Reshey	2313	013-0000-00 206-0000-00			
TRANSDUCERS	Byron Witt	2479	015-0000-00	Central Electro-Mechanical	Webb, Sharon	25, 3V, 33
TRANSFORMERS						
Purchased	John Thomas	2466	120-0000-00	Central Electro-Mechanical DAD	Webb, Sharon Elliott, Dave	25, 3V, 33 3Y
Tek-Made	Bob Cogan	4416				
TRANSISTORS						
Arrays	Matt Porter	2311	151-0000-00	Central Active Components	Kasper, Joel	3R, 3J
Field Effect (FET's)	Jerry Willard	2539	153-0000-00	DAD	Ware, Donna	3Z
Photo	Louis Mahn	2549				
Power	Jim Williamson	2552				
Small Signal	Ashok Narayan	2551				
Unijunction, Triacs	Jim Williamson	2552				
TRAYS	Kelly Cushing	2461	436-0000-00			
TRIM STRIPS	Katherine Dennett	2314	101-0000-00	Central Electro-Mechanical DAD	Webb, Sharon Allstott, Ron	3V, 33, 25 3H
TUBING, HEAT SHRINKS	Bella Geotina	2315	166-0000-00			
VALVES	John Thomas	2466	204-0000-00 341-0000-00			
VARNISH (BULK)	Katherine Dennett	2314	252-0000-00			
VENTILATING FANS	John Thomas	2466	119-0000-00 369-0000-00 378-0000-00	Central Electro-Mechanical DAD	Webb, Sharon Elliott, Dave	3V, 33, 25 3Y
WAFERS						
Processed	Katherine Dennett	2314	204-0000-00	Technology Group	Brown, Bill	1Y
Silicon	Katherine Dennett	2314				
WASHERS	Kelly Cushing	2461	210-0000-00	Central Electro-Mechanical DAD	Elle, Dave Hoffmeister, Marge	24, 1F, 3E 39

EVALUATION ENGINEER - BUYER LIST

COMPONENT	COMPONENT ENGINEER	EXT.	PART NUMBER(S)	DIVISION	BUYER	BUYER NO.
WHEELS	Kelly Cushing	2461	401-0000-00	Central Electro-Mechanical DAD	Webb, Sharon Hoffmeister, Marge	25, 3V, 33 39
WINDOWS	Bella Geotina	2315	331-0000-00			
WIRE, ELECTRICAL, STRIPE	Elizabeth Doolittle	2309	175-0000-00 176-0000-00 177-0000-00	VCM, Vancouver DAD EMCM, Beaverton, S^2M	Gardner, Don Elliott, Dave Pearce, Chuck	08, 2R 3Y 19, 1G
WIRE, BULK	Elizabeth Doolittle	2309	177-0000-00	VCM, Vancouver	Gardner, Don	08, 2R
YOKES	John Thomas	2466	108-0000-00	DAD IDD	Elliott, Dave Wetzler, Ron	3Y 1A

0

0

PURCHASING ROSTER

NAME	BUYER NUMBER	TELEPHONE	DELIVERY
CORPORATE PROCUREMENT			
Ferd Baricevic, Manager		627-2719	78-669
CORPORATE AGREEMENTS			
Ernie Garcia		627-2731	78-668
Karen Ennis		627-2782	78-668
Scott Foster		627-2702	78-641
POLICY & ADMINISTRATION			
Bonnie Sullivan, Manager		627-2727	78-641
CENTRAL PRODUCTION/ENGINEERING			
Ken Goodall, Purchasing Mgr.		627-2680	78-649
John Adams		627-2302	78-649
Frank Zulegar		627-4212	78-621
ACTIVE COMPONENTS			
Jim Finses, Purchasing Mgr.		627-2301	78-649
Sue Cannon	1T, 1O, 1X	627-2773	78-649
George Roussos	09, 3P, 4C	627-2762	78-649
G. Joel Kasper	3J, 3R, 38, 4B	627-2783	78-649
PASSIVE COMPONENTS			
Jordan Meiners, Purchasing Mgr.		627-2307	78-649
Harriet Frank	1C, 12	627-2749	78-649
Michelle Skaggs	28, 1E	627-2761	78-649
Glenn Ross	03, 1D	627-2740	68-649
ELECTRO/MECHANICAL			
Ralph Lohman, Purchasing Mgr.		627-2733	78-649
Dave Elle	24, 1F, 3E	627-2758	78-649
Karel Strand	05, 1P	627-2743	78-649
Sharon Webb	33, 25, 3V	627-2745	78-649
Rob Wilkins	31, 1B	627-2688	78-649
PURCHASING SERVICES			
Jay Goodwin, Purchasing Mgr.		627-0464	71-555
Gordon Stewart	48	627-4214	71-555
Don Adams	04	627-4187	71-555
Frances Lockhart	02	627-4190	71-555
Glenn Johnson	01, 3T, 3U	627-4183	71-555
Patty Earnest	14, 18	627-1209	71-555
Jack Conner	4K	627-4144	71-555
Mel Swire	11, 4L	627-4186	71-555
Ruth Banta	4F	627-4313	71-555
Andy Forbes	43	627-0448	71-555
Bill Isaacson	22	627-0449	71-555
IDD PROCUREMENT - WILSONVILLE			
Larry Hearn, Procurement Mgr.		685-2026	60-798
Mike Murphy, Purchasing Mgr.		685-3914	63-439
David Bates	1U	685-3410	63-439
Cindy Conklin	B2	685-3271	63-439
Cindy Hamilton	B1	685-3342	63-439
Cliff Johnson	B3, 2W	685-3542	63-439
Paula Adams		685-3893	63-439
Doug Stanton	35	685-3254	63-439
Joe Scott	3N	685-3257	63-439
Vicki Wacha	34, 4G	685-3259	63-439
Ron Wetzler	1A	685-3023	63-439
W. Kirk Brown	3X	685-3258	63-439
Linda Savory	1N	685-3295	63-439
COMM DIV PROCUREMENT			
Ed Srebnik, Procurement Mgr.		627-1580	58-264
Lloyl Strom, Purchasing Mgr.		627-2747	58-264
David Fox		627-2776	58-264
Ed Zilk	16	627-1824	58-264
Jan Hunt	3C	627-0444	58-264
Julia Likens	2C, 4E	627-4598	58-264
Harry Wilson	3F	627-2737	58-264

NAME	BUYER NUMBER	TELEPHONE	DELIVERY
DAD PROCUREMENT - WALKER ROAD			
Len Schulwitz, Procurement Mgr.		629-1133	94-326
Walt Sonksen, Purchasing Mgr.		629-1090	94-326
Marge Hoffmeister	4Y	629-1568	94-323
Mildred MacDonald	1K	629-1259	94-323
Jim Seed	4H, 2D, 1H	629-1130	94-323
Ron Allstott	3H	629-1307	94-323
David Elliott	3Y, 3Z, 39	629-1309	94-323
ID PROCUREMENT			
Linn Nelson, Procurement Mgr.		627-6207	47-741
		253-5208	C1-548
Larry Hiatt, Operations Mgr.		627-2880	39-548
		253-5328	C1-548
Lou Amash	32	253-5344	C1-548
Marti Kinney	3L	253-5451	C1-548
Mia Guthrie	2L	627-2736	39-846
Larry Dougherty	40	627-4185	39-846
Barbara Bassett	2X	627-1481	39-846
Kent Ross	4P	253-5450	C1-548
Clem Paslack	4T	253-5449	C1-548
Wendy Scott	3W, 2Y	253-5028	C1-548
EMCM - METALS PROCUREMENT			
Dick Borts, Procurement Mgr.		627-2741	16-298
Tino Ornelas, Purchasing Mgr.		627-2276	16-298
Art Merrill	1M, 36	627-0452	16-298
Dennis Fink	06, 3A	627-1381	16-298
Rex Gedney	30	627-1146	16-298
Cal Bjerke	49	627-4191	16-298
Bob Collier	4R	627-2734	16-298
Doug Balsillie	29, 3K, 1L	627-3095	10-000
EMCM SUBCONTRACT			
Sandi Jackson, Purchasing Mgr.		627-2664	16-306
Dick Kaiser	2H	627-1151	16-306
Shirley Wetherell	2N	627-1171	16-306
Pat Feathers	2F	627-1173	16-306
Lloyd Clark	2T	627-1173	16-306
EMCM SPECIAL SUPPORT MANUFACTURING PROCUREMENT			
David Irwin, Procurement Mgr.		627-2757	19-661
Lloyd Davidson	1J, 15	627-2760	19-661
Norma Olson	2B	627-4557	19-661
Doug Prouty	46	627-2201	76-337
Joan Evans	4J	627-2915	76-337
Chuck Pearce	1G, 19	627-2777	19-661
Cathryn McMurry	1R	627-2754	19-661
EMCM - VANCOUVER			
Billie Lader, Manager	45, 2P	699-7273	08-538
Russ McKichan	3G, 08, 2R	699-7305	08-538
Clyde Deardorff	1W	699-7370	08-545
TECHNOLOGY GROUP PROCUREMENT			
Bill Hart, Purchasing Mgr.	B8	627-6814	50-273
Art Peterson	B5	627-6816	50-471
Larry Fisher	B7	627-4603	50-471
Irene Eberhardt	26, 2J	627-6819	50-471
Robin Walton	07, 3M	627-6826	50-471
Bob Jennings	B4	627-6823	50-471
Don Gardner	B6		50-471
Ken Stucki	4X, 2K, 20, 4M	627-3915	13-856
Carol McDermott	4V	627-3914	13-856
Ron Brown	23, 2A	627-4197	59-201
Bill Brown	1Y	627-1094	59-201
George Kaylor	4Z	627-1349	78-664
TECHNOLOGY GROUP CONTRACT ADMINISTRATION			
David Munsey		627-2771	50-273
FOREST GROVE PROJECT PROCUREMENT			
Tom Haun, Purchasing Mgr.	4N	357-6749	19-003
Dave Lemas	42	359-5108	19-003
Paul Tripp	44	359-5204	19-003
Ken Roberts	2V, 37	627-0322	38-388

PURCHASING ROSTER (ALPHABETICAL)

0

NAME	BUYER NUMBER	TELEPHONE	DELIVERY
Adams, Don	04	627-4187	71-555
Allstott, Ron	3H	629-1307	94-323
Amash, Lou	32	253-5344	C1-548
Balsillie, Doug	29, 3K, 1L	627-3095	10-000
Banta, Ruth	4F	627-4313	71-555
Bassett, Barbars	2X	627-1481	39-846
Bates, Dave	1U	685-3410	63-439
Bjerke, Cal	49	627-4191	16-298
Brown, Bill	1Y	627-1094	59-201
Brown, Kirk	3X	685-3258	63-439
Brown, Ron	23, 2A	627-4197	59-201
Cannon, Sue	38, 4B, 1V	627-2773	78-649
Clark, Lloyd	2T	627-1173	16-306
Collier, Bob	4R	627-2734	16-298
Conklin, Cindy	B2	685-3271	63-439
Conner, Jack	4K	627-4144	71-555
Davidson, Lloyd	1J, 15	627-2760	19-661
Deardorff, Clyde	1W	699-7370	08-545
Dougherty, Larry	40	627-4185	39-846
Earnest, Patty	14, 18	627-1209	71-555
Eberhardt, Irene	26, 2J	627-2819	50-471
Elle, Dave	24, 1F	627-2758	78-649
Elliott, Dave	3Y, 3Z, 39	629-1309	94-323
Evans, Joan	4J	627-2915	76-337
Feathers, Pat	2F	627-1173	16-306
Fink, Dennis	06, 3A	627-1381	16-298
Fisher, Larry	B7	627-4603	50-471
Forbes, Andy	43	627-0448	71-555
Frank, Harriet	1C, 12	627-2749	78-649
Gardner, Don	B6		50-471
Gedney, Rex	30	627-1146	16-298
Guthrie, Mia	2L	627-2736	39-846
Hamilton, Cindy	B1	685-3342	63-439
Hart, Bill	B8	627-6814	50-273
Haun, Tom	4N	357-6749	19-003*
Hoffmeister, Marge	4Y	629-1568	94-323
Hunt, Jan	3C	627-0444	58-264
Isaacson, Bill	22	627-0449	71-555
Jennings, Bob	B4	627-6823	50-471
Johnson, Cliff	B3, 2W	685-3542	63-439
Johnson, Glenn	01, 3T, 3U	627-4183	71-555
Kaiser, Dick	2H	627-1151	16-306
Kasper, Joel	3J, 3R	627-2783	78-649
Kaylor, George	4Z	627-1349	78-664
Kinney, Marti	3L	253-5451	C1-548
Lader, Billie	45, 2P	699-7273	08-539
Lemas, Dave		359-5108	19-003*
Lewis, Peggy	1X	627-2179	78-649
Likens, Julia	2C, 4E	627-4598	58-264
Lockhart, Frances	02	627-4190	71-555
MacDonald, Mildred	1K	629-1259	94-323
McDermott, Carol	4V	627-3914	13-856
McKichan, Russ	08, 2R, 3G	699-7305	08-538
McMurry, Cathryn	1R	627-2754	19-661
Merrill, Art	1M, 36	627-0452	16-298
Olson, Norma	2B	627-4557	19-661
Paslack, Clem	4T	253-5449	C1-548
Pearce, Chuck	1G, 19	627-2777	19-661
Peterson, Art	B5	627-6816	50-471
Prouty, Doug	46	627-2201	76-337
Roberts, Ken	2V, 37	627-0322	38-388
Ross, Glenn	03, 1D	627-2740	78-649
Ross, Kent	4P	253-5450	C1-548
Roussos, George	09, 3P, 4C	627-2762	78-649
Savory, Linda	1N	685-3295	63-439
Scott, Joe	3N	635-3257	63-439
Soctt, Wendy	3W, 2Y	253-5028	C1-548
Seed, Jim	4H, 2D, 1H	629-1130	94-323
Skaggs, Michelle	28, 1E	627-2761	78-649
Stanton, Doug	35	685-3254	63-439
Stewart, Gordon	48	627-4214	71-555
Strand, Karel	05, 1P	627-2743	78-649
Stucki, Ken	4X, 2K, 20, 4M	627-3915	13-856
Swire, Mel	11, 4L	627-4186	71-555
Tripp, Paul	44	359-5204	19-003*

NAME	BUYER NUMBER	TELEPHONE	DELIVERY
Wacha, Vicki	34, 4G	685-3259	63-439
Walton, Robin	07, 3M	627-6826	50-471
Ware, Donna	1T, 10	627-2767	78-649
Webb, Sharon	25, 3V	627-2745	78-649
Wetherell, Shirley	2N	627-1171	16-306
Wetzler, Ron	1A	685-3023	63-439
Wilkins, Rob	31, 1B	627-2688	78-649
Wilson, Harry	3F	627-2737	58-264
Zilk, Ed	16	627-1824	58-264

DIRECT DIAL PREFIXES:

627 Beaverton
642 Merlo Road
699 Vancouver
696 Vancouver
253 Clark County
629 Walker Road
685 Wilsonville

* Forest Grove employees will move to F-1 effective January 1, 1983.

PURCHASING ROSTER (NUMERICAL)

BUYER NUMBER	BUYER	TELEPHONE	DELIVERY
B1	Hamilton, Cindy	685-3342	63-439
B2	Conklin, Cindy	685-3271	63-439
B3	Johnson, Cliff	685-3542	63-439
B4	Jennings, Bob	627-6823	50-471
B5	Peterson, Art	627-6816	50-471
B6	Gardner, Don		50-471
B7	Fisher, Larry	627-4603	50-471
B8	Hart, Bill	627-6814	50-273
01	Johnson, Glenn	627-4183	71-555
02	Lockhart, Frances	627-4190	71-555
03	Ross, Glenn	627-2740	78-649
04	Adams, Don	627-4187	71-555
05	Strand, Karel	627-2743	78-649
06	Fink, Dennis	627-1381	16-298
07	Walton, Robin	627-6826	50-471
08	McKichan, Russ	699-7305	08-538
09	Roussos, George	627-2762	78-649
1A	Wetzler, Ron	685-3023	63-439
1B	Wilkins, Rob	627-2688	78-649
1C	Frank, Harriet	627-2749	78-649
1D	Ross, Glenn	627-2740	78-649
1E	Skaggs, Michelle	627-2761	78-649
1F	Elle, Dave	627-2758	78-649
1G	Pearce, Chuck	627-2777	19-661
1H	Seed, Jim	629-1130	94-323
1J	Davidson, Lloyd	627-2760	19-661
1K	MacDanold, Mildred	629-1259	94-323
1L	Balsillie, Doug	627-3095	10-000
1M	Merrill, Art	627-0452	16-298
1N	Savory, Linda	685-3295	63-439
1P	Strand, Karel	627-2743	78-649
1R	McMurry, Carhryn	627-2754	19-661
1T	Ware, Donna	627-2767	78-649
1U	Bates, Dave	685-3410	63-439
1V	Cannon, Sue	627-2773	78-649
1W	Deardorff, Clyde	699-7370	08-545
1X	Lewis, Peggy	627-2179	78-649
1Y	Brown, Bill	627-1094	59-201
10	Ware, Donna	627-2767	78-649
11	Swire, Mel	627-4186	71-555
12	Frank, Harriet	627-2749	78-649
14	Earnest, Patty	627-1209	71-555
15	Davidson, Lloyd	627-2760	19-661
16	Zilk, Ed	627-1824	58-264
18	Earnest, Patty	627-1209	71-555
19	Pearce, Chuck	627-2777	19-661
2A	Brown, Ron	627-4197	59-201
2B	Olson, Norma	627-4557	19-661
2C	Likens, Julia	627-4598	58-264
2D	Seed, Jim	629-1130	94-323
2F	Feathers, Pat	627-1173	16-306
2H	Kaiser, Dick	627-1151	16-306
2J	Eberhardt, Irene	627-6819	50-471
2K	Stucki, Ken	627-3915	13-856
2L	Guthrie, Mia	627-2736	39-846
2N	Wetherell, Shirley	627-1171	16-306
2P	Lader, Billie	699-7273	08-538
2R	McKichan, Russ	699-7305	08-538
2T	Clark, Lloyd	627-1173	16-306
2V	Roberts, Ken	627-0322	38-388
2W	Johnson, Cliff	685-3542	63-439
2X	Bassett, Barbara	627-1481	39-846
2Y	Scott, Wendy	253-5028	C1-548
20	Stucki, Ken	627-3915	13-856
22	Isaacson, Bill	627-0449	71-555
23	Brown, Ron	627-4197	59-201
24	Elle, Dave	627-2758	78-649
25	Webb, Sharon	627-2745	78-649
26	Eberhardt, Irene	627-6819	50-471
28	Skaggs, Michelle	627-2761	78-649
29	Balsillie, Doug	627-3095	10-000
3A	Fink, Dennis	627-1381	16-298
3C	Hunt, Jan	627-0444	58-264
3F	Wilson, Harry	627-2737	58-264

BUYER NUMBER	BUYER	TELEPHONE	DELIVERY
3G	McKichan, Russ	699-7305	08-538
3H	Allstott, Ron	629-1307	94-323
3J	Kasper, Joel	627-2783	78-649
3K	Balsillie, Doug	627-3095	10-000
3L	Kinney, Marti	253-5451	C1-548
3M	Walton, Robin	627-6826	50-471
3N	Scott, Joe	685-3257	63-439
3P	Roussos, George	627-2762	78-649
3R	Kasper, Joel	627-2783	78-649
3T	Johnson, Glenn	627-4183	71-555
3V	Webb, Sharon	627-2745	78-649
3W	Scott, Wendy	253-5028	C1-548
3X	Brown, Kirk	685-3258	63-439
3Y	Elliott, Dave	629-1309	94-323
3Z	Elliott, Dave	629-1309	94-323
30	Gedney, Rex	627-1146	16-298
31	Wilkins, Rob	627-2688	78-649
32	Amash, Lou	253-5344	C1-548
33	Webb, Sharon	627-2745	78-649
34	Wacha, Vicki	685-3259	63-439
35	Stanton, Doug	685-3254	63-439
36	Merrill, Art	627-0452	16-298
37	Roberts, Ken	627-0322	38-388
38	Cannon, Sue	627-2773	78-649
39	Elliott, Dave	629-1309	94-323
4B	Cannon, Sue	627-2773	78-649
4C	Roussos, George	627-2762	78-649
4E	Likens, Julia	627-4598	58-264
4F	Banta, Ruth	627-4313	71-555
4G	Wacha, Vicki	685-3259	63-439
4H	Seed, Jim	629-1130	94-323
4J	Evans, Joan	627-2915	76-337
4K	Conner, Jack	627-4144	71-555
4L	Swire, Mel	627-4186	71-555
4M	Stucki, Ken	627-3915	13-856
4N	Haun, Tom	357-6749	19-003*
4P	Ross, Kent	253-5450	C1-548
4R	Collier, Bob	627-2734	16-298
4T	Paslack, Clem	253-5449	C1-548
4V	McDermott, Carol	627-3914	13-856
4X	Stucki, Ken	627-3915	13-856
4Y	Hoffmeister, Marge	629-1568	94-323
4Z	Kaylor, Georgw	627-1349	78-664
40	Dougherty, Larry	627-4185	39-846
43	Forbes, Andy	627-0448	71-555
44	Tripp, Paul	359-5204	19-003*
45	Lader, Billie	699-7273	08-545
46	Prouty, Doug	627-2201	76-337
48	Stewart, Gordon	627-4214	71-555
49	Bjerke, Cal	627-4191	16-298

DIRECT DIAL PREFIXES:

627 Beaverton
642 Merlo Road
699 Vancouver
696 Vancouver
629 Walker Road
685 Wilsonville
253 Clark County

* Forest Grove employees will move to F-1 effective January 1, 1983.

SIX CATALOG INDEX

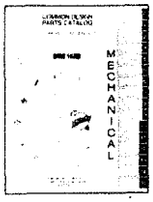

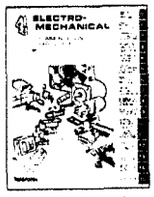

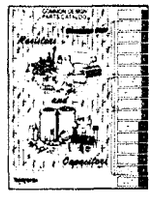
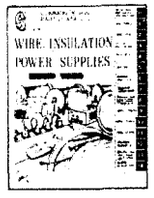

THIS IS A COMPOSITE INDEX OF THE TYPES OF PARTS INCLUDED IN THE SIX CATALOGS (SHOWN ABOVE). IT IS IN ALPHABETICAL ORDER GIVING THE CATALOG AND SECTION NUMBER THAT THE PARTS ARE LISTED IN.

CAT	SECT	TYPE OF PARTS (ALPHA LIST)
3	4	Adhesives
4	9	Air Filters
3	5	Aluminum (Extrusion)
3	6	Aluminum (Bar, Wire, Flat, Tube)
2	15	Angle Brackets
1	3	Arrays
1	6	
1	10	
1	10	Back Diodes
4	8	Battery
2	11	Bearing (Sleeve)
2	11	Belts (Drive)
3	8 & 11	Beryllium Materials
2	3	Binding Post
4	10	
2	10	Bracket (Angle & Comp. Mounting)
2	15	
3	7	Brass Material
2	13	Bumpers
2	4	Bushings
2	9	Button Plugs
2	13	Cabinet (Instrument)
2	14	Cabinet (Fasteners)
6	5 & 6	Cables (RF, Special Purpose, Flat)
6	8	Cables (Assys, Power Cords, Ext.)
6	10	Cable Nipples
5	9-14	Capacitors, Fixed
5	15	Capacitors, Variable
1	15	Cartridge Lamp
2	13	Casters
2	14	Catches
3	4	Ceramic Materials
3	3	Ceramic Substrates
2	11	Chains (Drive)
3	4	Chemical Elements & Symbols Table
2	14	Circuit Board Ejectors
4	13	Circuit Board Interconn System
3	3	Circuit Board Laminate Materials
4	6	Circuit Breakers
2	9	Clamps
2	9	Clips
3	15	Coatings (Insulative, Resistive, Paints, etc.)
4	2	Coils
3	1	Conductive Elastomers
4	10-13	Connectors (Ckt Board, Coax, Power, D Series, Peltola, Flat Cable)
4	13	Contacts
3	10-11	Copper and Misc. Copper Alloys
3	8	Copper-Beryllium
4	2	Core (For Coils & Transformers)
2	6	Couplings, Shaft
4	1	Crystal Oscillators
4	1	Crystal Units & Holders
1	11	Current Limiting Diodes
2	13	Cushioning Pads
6	4	Delay Lines
2	7	Dial (Knob & Turns Counting)
1	10-13	Diodes
4	10	Discrete Component Carriers
	PG III	EIA Date Code
1	0	Environ and Reliability Notes
3	[illegible]	Epoxy Preforms
2	8	Eyelets
4	9	Fan and Impeller (Air)
2	4	Fasteners
3	2	Felt Material
2	3	Ferrules
1	7	FET'S
4	1	Filters (RFI)
2	13	Flipstands, Cab
3	11	Flux
2	13	Foot (Cabinet)
4	2	Form (Coil & Transformer)
1	10	Four Layer Diodes
4	8	Fuses
4	8	Fuseholder and Clips

CAT	SECT	TYPE OF PARTS (ALPHA LIST)
2	10	Gasket (RFI)
4	1	
3	4	Gasses (Material)
2	11	Gears
1	15	Glow Lamps
2	4	Grommets
2	14	Guide (Pin, Ckt Bd & Instr. Cabnt)
2	13	Handles
1	5	Heat Sinks
2	14	Hinges
2	9	Holders
4	8	Holders (Battery)
4	9	Impeller (Air Fan)
1	15	Incandescent Lamps
1	15	Indicator Lights
4	2	Inductors
3	15	Ink (Marking)
2	7	Insert (Knob)
2	2	Insert (Threaded)
2	13	Instrument Cabinets
3	2-4	Insulating Materials (Bulk)
6	9	Insulating Sleeving
2	3	Insulator Post
1	5	Insulators
1	1-4	Integrated Circuits (Microcircuits)
4	13	Interconn System (For Circuit Bds)
4	10	Jack (Telephone & Tip)
2	7	Knob & Knob Subparts
2	6	Knob With Shaft
2	7	Knob Design Data
3	15	Lacquer
1	15	Lamp (Incand, Glow, Indicator)
1	15	Lampholder
2	14	Latch (Door, etc.)
6	1	Leads (Formed)
1	14	LED'S (Light Emitting Diodes)
1	15	Lens (Indicator)
2	14	Lock (Door, etc.)
1	0	Logo List
4	0	
5	0	
3	15	Lubricants
4	10	Lug Terminals (Solder and Solderless)
2	4	
3	12	Magnetic Shielding Material
2	12	Marker, Identification
1	1-4	Microcircuits
1	1	Microprocessors
2	13	Modular Packaging System
4	9	Motors
1	15	Neon Lamps
3	11	Nickel Material (Bulk)
2	2	Nuts and Nut Block
1	3	Op Amps
1	14	Optoelectronic Devices
1	14	Optoisolators
2	4	"O" Rings
4	1	Oscillator (Crystal)
2	13	Pad (Cushioning)
3	15	Paint & Paint Additives
3	9	Phosphor-Bronze Material
1	14	Photoconductors
1	14	Phototransistors
2	14	Pin (Guide)
2	8	Pin (Spring and Retaining)
3	1	Plastic Materials (Bulk Molding)
3	2	Plastic (Shapes and Sheets)
2	12	Plate (Indent and Instruction)
2	3	Post (Threaded Spacers)
4	2	Pot Cores
5	6-8	Potentiometer (Variable Resistor)
6	11	Power Supplies
1	6	Power Transistors
2	2 & 3	Press Mount Hardware

CAT	SECT	TYPE OF PARTS (ALPHA LIST)
1	0	Product Safety
4	0	
5	0	
1	8	Programmable Thyristors
2	11	Pulleys
2	7	Push Buttons
1	12	Rectifier Diodes
4	3	Relay
1	0	Reliability Notes
4	0	
5	0	
5	1-5	Resistor, Fixed
5	6-8	Resistor, Variable
2	8	Retaining Ring
4	1	RFI Filters
2	8	Rivet
1	12	Schottky Diodes
1	8	SCR Thyristors
2	1	Screws
1	All	Semiconductors
2	6	Shafts
2	10	Shields (RFI Gaskets, Ckt Boards, etc.)
4	1	
2	1	Shock Mounts
1	10	Shockley (Diodes)
1	12	Signal Diodes
2	11	Sleeve Bearing
2	14	Slide (Ckt Board & Instr. Cabinet)
1	6	Small Signal Transistors
1	10	Snap-Off Diodes
4	10	Socket (Electrical Components)
3	11	Solder
4	3	Solenoids
3	15	Solvents
2	3	Spacers (Threaded & Unthreaded)
4	8	Spark Gap
2	8	Spring (Helical)
2	11	Sprockets
3	14	Stainless Steel Material
2	3	Standoffs
3	13	Steel Material
2	4	Strain Relief Bushings
2	9	Straps
2	1	Stud (Threaded, Weld, Pressmount, etc.)
4	3-7	Switch (Lever, Slide, Push, Toggle, Reed, Thermo, Rocker, Rotary, Power, Logic, Thumbwheel, etc.)
1	12	Switching Diodes
1	8	Switching Transistors
3	4	Tape
All	0	Tek Part Number System
2	10	Terminal (Lug, Block, Grnding, Studs, Ceramic Strip, Quick Disc, Feedthru)
4	10	
2	1	Thumbscrews
4	15	Tools, Small
4	2	Transformers
1	6-9	Transistors
1	8	Triac Thyristors
1	10	Tunnel Diodes
1	8	Unijunction Thyristors
5	6-8	Variable Resistors
3	15	Varnish
1	12	Voltage Multipliers (Diodes)
4	8	Voltage Selectors (Fuse)
2	4	Washer (Flat, Lock, Spring Shldr)
6	1-3	Wire (Electrical)
1	11	Zener Diodes

EVALUATION ENGINEER LIST, PREVIOUSLY ON BACK COVER, CAN BE FOUND ON PAGES 0-70 THRU 0-73. ALSO, PURCHASING ROSTER ON INSIDE OF THIS COVER