Tektronix®

COMMITTED TO EXCELLENCE

PS 505
POWER SUPPLY

INSTRUCTION MANUAL

TEKTRONIX®

PS 505
POWER SUPPLY

INSTRUCTION MANUAL

Tektronix, Inc.
P.O. Box 500
Beaverton, Oregon 97005

Serial Number _____

070-1784-00

First Printing JUL 1974

WARRANTY

All TEKTRONIX instruments are warranted against defective materials and workmanship for one year. Any questions with respect to the warranty should be taken up with your TEKTRONIX Field Engineer or representative.

All requests for repairs and replacement parts should be directed to the TEKTRONIX Field Office or representative in your area. This will assure you the fastest possible service. Please include the instrument Type Number or Part Number and Serial Number with all requests for parts or service.

Specifications and price change privileges reserved.

U.S.A. and foreign TEKTRONIX products covered by U.S. and foreign patents and/or patents pending.

TABLE OF CONTENTS

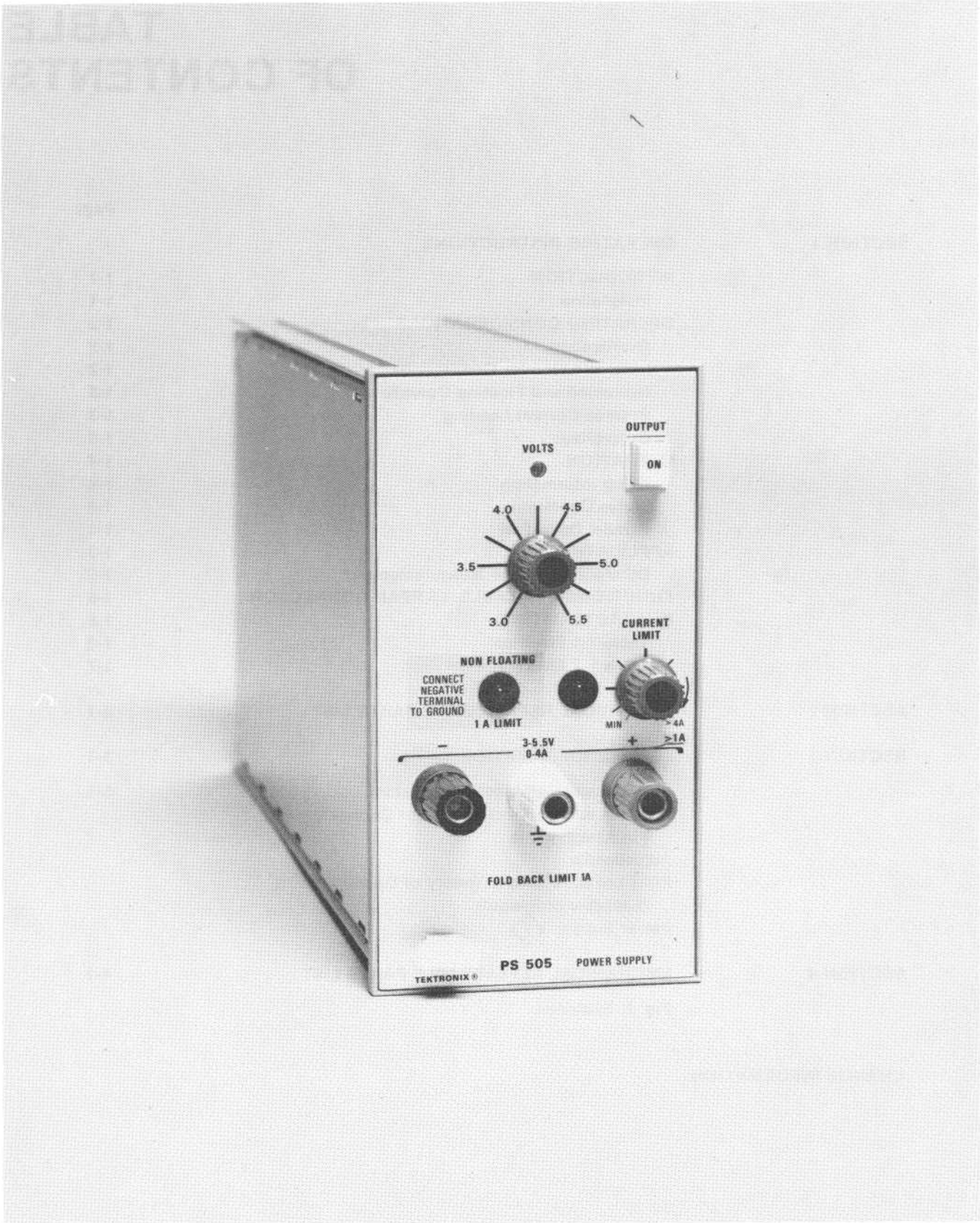
OUTPUT
VOLTS
ON
4.0
4.5
3.5
5.0
3.0
5.5
CURRENT LIMIT
NON FLOATING
CONNECT NEGATIVE TERMINAL TO GROUND
1 A LIMIT
MIN
> 4A
>1A
3-5.5V
0-4A
FOLD BACK LIMIT 1A
PS 505
POWER SUPPLY
TEKTRONIX ®

Ⓐ

OPERATING INSTRUCTIONS

INTRODUCTION

The PS 505 is a variable-voltage, variable-current dc power supply that provides a convenient way to power bipolar logic, level shifters, light-emitting diodes, incandescent displays, and analog devices. It is designed to operate in the right-hand (high power) compartment of a TM 504 or TM 506 Power Module. When operated in the right-hand compartment of a TM 504 or TM 506, the PS 505 provides a floating output that is variable between 3.0 and 5.5 volts at a maximum of 4.0 amperes.

NOTE

If the PS 505 is operated in a compartment other than the right-hand (high power) compartment of a TM 504 or TM 506, the output current drawn from the PS 505 must be limited to 1.0 amperes maximum. However, the negative output terminal should be grounded at the front panel since there is a possible ground path of uncertain characteristics through the rear connector when the PS 505 is operated in any place other than in the right-hand compartment.

A front panel lamp, marked VOLTS, indicates the presence of voltage at the output terminals. The light intensity varies with the output voltage and verifies that the output is indeed variable. A front-panel, light-emitting diode indicates when the PS 505 goes into current limiting. Hard limiting causes the light emitting diode to glow brightly and causes the VOLTS lamp to dim. A check of the limiting circuitry and the operation of these lights can be made by momentarily shorting the output terminals.

A second front-panel mounted light-emitting diode indicates that the PS 505 is being operated in a compartment other than the right-hand (high power) compartment of the Power Module and that the output current must be limited to 1 ampere or less. It also indicates that the PS 505 is to have its negative output terminal grounded and operated in a non-floating mode.

Installation

The PS 505 is calibrated and ready to use as received. Referring to Fig. 1-1, install the Power Supply and turn on the Power Module. Press the OUTPUT button to apply power to the PS 505. Check that the VOLTS indicator light on the front panel comes on (the light will be very dim at low voltages).

NOTE

Because of the high current drawn by the PS 505, it is recommended that the Power Module be turned off before inserting or removing the PS 505. Arcing at the connector terminals can reduce connector life. However, no internal damage will result if the monitor is inserted into a live Power Module.

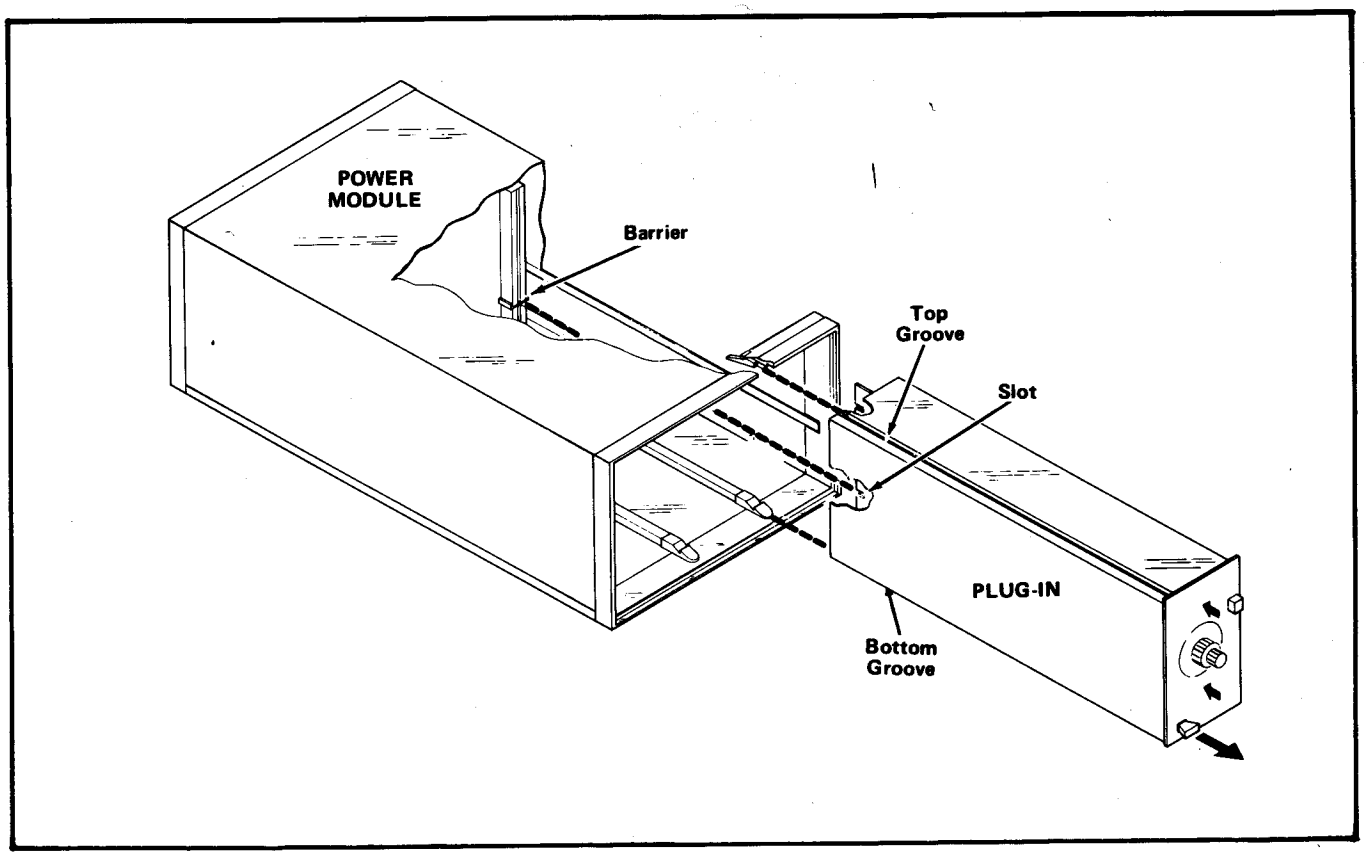

Fig. 1-1. Plug-In Installation and removal.

OPERATING CONSIDERATIONS

Overheating

The PS 505 is designed to operate at an ambient temperature from 0°C to +50°C. However, when operating several power supplies in a multi-plug-in Power Module, especially at low output voltages, or when operating close to other heat-producing equipment, internal temperature may exceed safe limits and actuate a thermal cutout in the Power Module. Refer to the Power Module Instruction Manual for more complete information.

Load and Monitor Connections

Improper connections between the power supply output and the load(s) and/or monitoring device(s) are a common cause of errors. Multiple loads or monitoring devices must be connected directly to the output terminals with separate pairs of leads as shown in Fig. 1-2. Avoid using clip leads, since their contact resistance can exceed the output impedance of the PS 505 and cause significant measurement error.

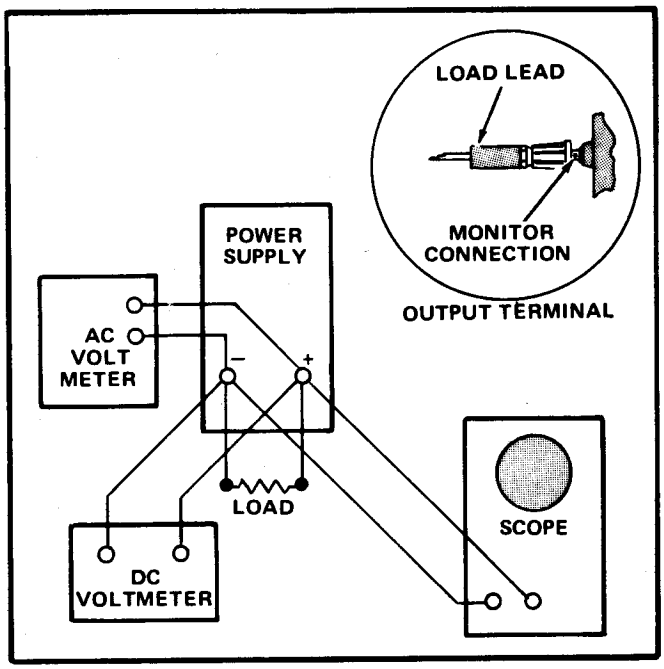

Fig. 1-2. Monitor and load connections.

Grounded and Floating Operation

The PS 505 is a "floating" supply (when installed in the high power compartment of the Power Module) since no internal connections are made to either the chassis or ground. The supply can thus be used as a positive or negative supply by simply connecting between the common and the negative or positive output terminal. However, there may be undesirable effects caused by grounding the supply to the chassis while the load is grounded at some point removed from the supply chassis. For example, if a remote load is connected as shown in Fig. 1-3, ground currents containing the power line frequency could result and create excessive noise and ripple in series with the load. Thus, floating operation is recommended to insure against problems caused by undesirable ground currents.

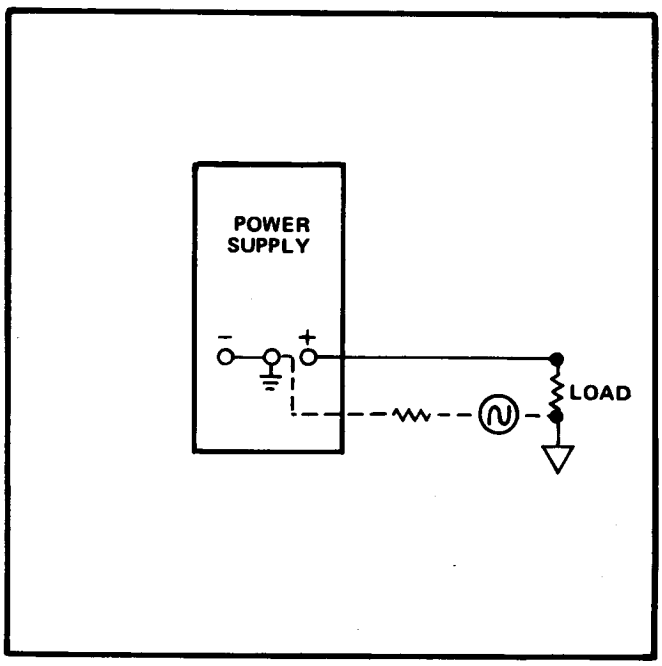

Fig. 1-3. Ground loop created by grounded remote load.

If the power supply is operated into a switching load where the current demand changes abruptly, it is recommended that a 12 Ω shunting resistor be placed across the output terminals. This will ensure that the supply always sees a minimum load and improves regulation.

NOTE

The PS 505 is ground referenced negative when installed in any other compartment of a Power Module except the high power compartment. If the PS 505 is installed in any compartment other than the high power compartment, operate it with a strap between the minus and ground terminals.

Reverse Current Loading

In some applications as when driving an inductive load, the load might behave as a current source for part of its operating cycle. Since the output circuit of a series regulated supply is unidirectional, reverse current will not normally pass through the regulator. The internal reverse-current diode (CR75) conducts only when the PS 505 terminal voltage reverses and therefore protects the series regulator against reverse currents. However, when operating a switching or inductive load, connecting a shunt resistor (R_S) of about 12 Ω as shown in Fig. 1-4 provides an external reverse current path so the power supply sources or delivers current only.

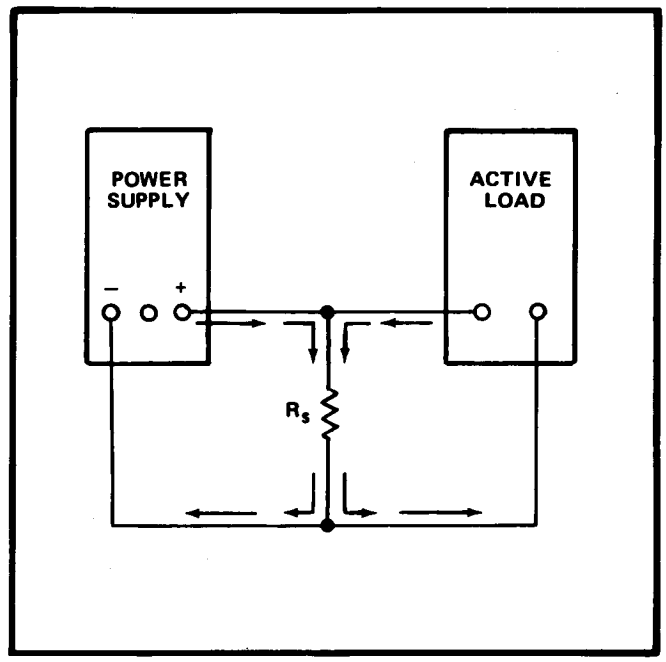

Fig. 1-4. Reverse current shunt (R_S) with active load.

Overvoltage

The PS 505 is protected from overvoltage conditions by an overvoltage protection circuit which blows the fuse at about 7 V dc. Component failure in the PS 505 could result in load damage if external protection is not provided. Like wise, if the load (or other instruments connected to the load) produce a voltage across the PS 505 terminals which is the same polarity but of greater amplitude, damage to the PS 505 may result, depending on the amount of overvoltage and the impedance of the load.

OPERATION

Setup Information

The following steps demonstrate the use of the PS 505 controls and connectors.

1. Install the PS 505 into (preferably) the right hand compartment of the Power Module.

2. Press the OUTPUT button to apply power to the PS 505. Observe that the VOLTS indicator light comes on (the light will be very dim at low voltages).

3. Set the VOLTS controls for approximately 3.5 V.

4. Turn the CURRENT LIMIT control fully ccw (to protect the ammeter). Connect an ammeter between the + and − terminals and adjust the CURRENT LIMIT control for the maximum desired current output.

5. Remove the ammeter. Connect the load between the + and − terminals. Adjust the VOLTS control for the desired output.

Series Operation

The outputs of two or more supplies can be connected in series as shown in Fig. 1-5 to obtain an output voltage equal to the sum of the output voltages from each supply. The maximum output is limited to 350 V dc + peak ac (i.e., the isolation voltage rating between the output terminals and ground). Each supply must be adjusted individually to obtain the desired output voltage.

NOTE

The PS 505 has internal diodes connected across the output to protect any of the series-connected supplies against reverse polarity if the load is shorted, or one of the supplies is not on.

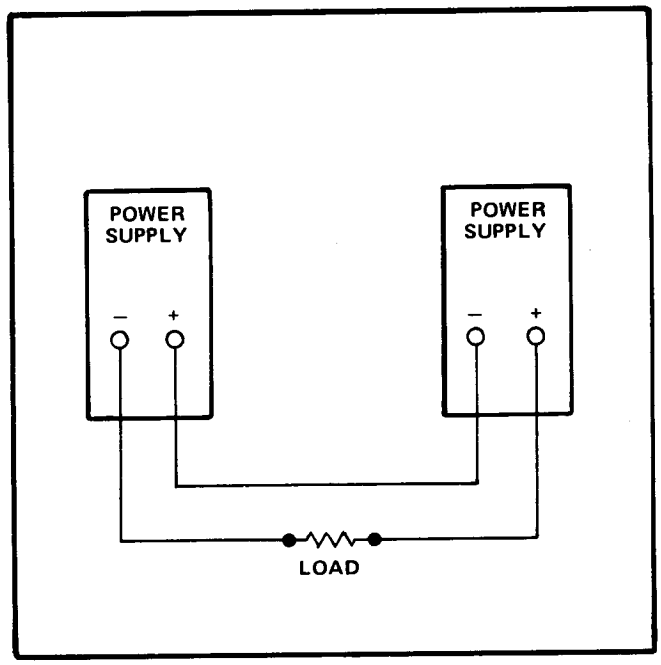

Fig. 1-5. Series-connected supplies.

Parallel Operation

CAUTION

Parallel operation is not recommended unless a forward biased diode capable of handling the required current and voltage is inserted between each power supply and the load. Failure to do this may cause power supply damage.

The outputs of two or more current-limiting, automatic-crossover supplies can be connected in parallel as shown in Fig. 1-6 to obtain an output current equal to the sum of the output currents from each supply. Each supply must be adjusted individually to obtain the desired output current.

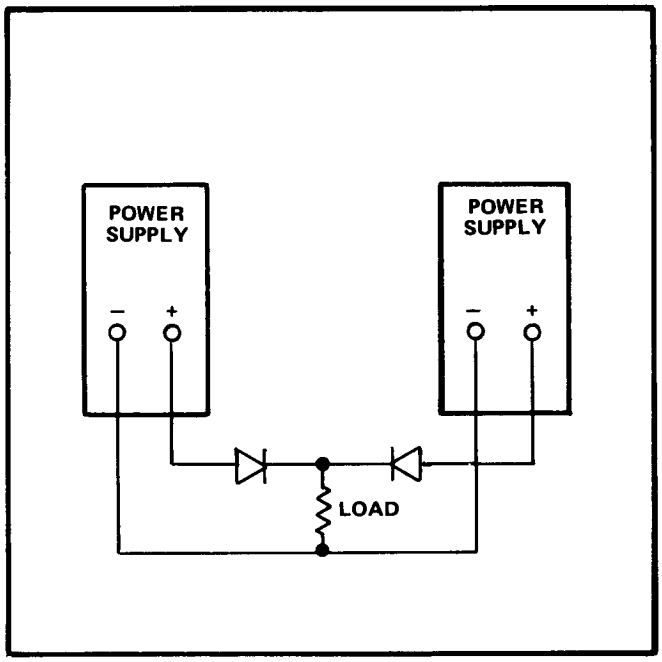

Fig. 1-6. Parallel-connected supplies.

One supply should be set for the desired output voltage and the other should be set for a slightly higher voltage. The supply set for the desired voltage will then become a constant voltage source, while the supply with the higher voltage output becomes a current-limited source (due to automatic crossover) which results in their output voltage decreasing to that of the supply with the lowest output voltage.

APPLICATIONS

Differential Voltage Measurements

Very small dc voltage changes or unknown voltages can be measured by connecting the PS 505, a null detector, and the source under test in a differential configuration as shown in Fig. 1-7. Comparison measurements at nearly the accuracy and sensitivity of costly differential voltmeters can be made with the inexpensive PS 505. The ultimate accuracy and sensitivity of the measurement depends on the PS 505 and the type of null detector used. A calibrated DC amplifier in a high-gain oscilloscope such as the Tektronix 5100-Series Oscilloscope with a 5A20N Differential Amplifier plug-in will serve as a convenient null detector, or a sensitive milliameter with a series resistor is also satisfactory.

NOTE

Examine the circuit for ground loops when using a null detector with one input terminal grounded (see Grounded and Floating Operation).

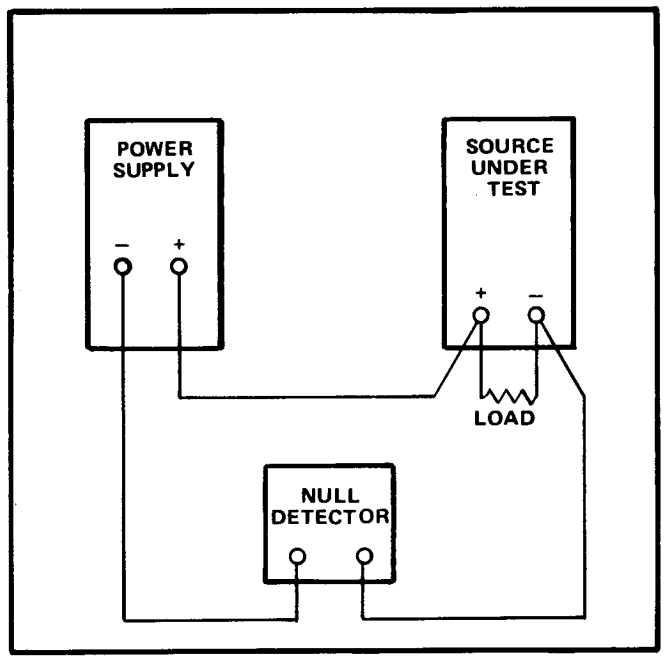

Fig. 1-7. Differential measurement connections.

FUNCTIONS AVAILABLE AT REAR CONNECTOR

Unassigned pins are available at the rear connector for routing signals to and from the PS 505 for specialized applications (see Rear Interface connector assignments at the rear of this manual). One or more compartments of a multi-plug-in Power Module can be wired with barriers installed to provide specific functions between compartments. See Power Module instruction manual for additional information.

CHARACTERISTICS

Performance Conditions

Unless otherwise noted, the electrical characteristics are valid only if the instrument has been calibrated at an ambient temperature between +20°C and +30°C and is operated at an ambient temperature between 0°C and +50°C.

TABLE 1-1

Electrical

Characteristics	Performance Requirements	Supplemental Information
Line Regulation	Within 10 mV for a ±10% line voltage change	
Load Regulation	Within 5 mV for a 0.5 to 4.0 A load change	Transient recovery ≤20 μs for a constant voltage to recover within 20 mV of nominal output voltage after a 3.5 A change in output current
Ripple and Noise	3 mV peak-to-peak or less	Power supply output voltage set to 5 V with a supply load of 4.0 A
Temperature Coefficient	0.01%/°C or less	
Stability	0.1% +5 mV of drift in 8 hours	Line voltage, load and temperature held constant
Foldback Current	When output current exceeds 4.1 A, current folds back to less than 1.5 A and latches	To restore to normal operation, turn PS 505 power off. Reduce current load to ≤4.0 A, then turn PS 505 power on

TABLE 1-2

Environmental

Characteristics	Performance Requirements	Supplemental Information
Temperature Operating	0°C to +50°C	
Storage	−40°C to +75°C	
Altitude Operating	To 15,000 feet	
Storage	To 50,000 feet	
Vibration Operating and Non-Operating	With instrument complete and operating, vibration frequency swept from 10 to 50 to 10 Hz at 1 minute per sweep. Vibrate 15 minutes in each of the three major axes at 0.015" total displacement. Hold 3 minutes at any major resonance, or if none, at 50 Hz. Total time, 54 minutes.	
Shock Operating and Non-Operating	30 g's, 1/2 sine, 11 ms duration, 2 shocks in each direction along 3 major axes, for a total of 12 shocks	

ELECTRICAL REPLACEABLE PARTS LIST

PARTS ORDERING INFORMATION

Replacement parts are available from or through your local Tektronix, Inc. Field Office or representative.

Changes to Tektronix instruments are sometimes made to accommodate improved components as they become available, and to give you the benefit of the latest circuit improvements developed in our engineering department. It is therefore important, when ordering parts, to include the following information in your order: Part number, instrument type or number, serial number, and modification number if applicable.

If a part you have ordered has been replaced with a new or improved part, your local Tektronix, Inc. Field Office or representative will contact you concerning any change in part number.

Change information, if any, is located at the rear of this manual.

SPECIAL NOTES AND SYMBOLS

X000	Part first added at this serial number
00X	Part removed after this serial number

ITEM NAME

In the Parts List, an Item Name is separated from the description by a colon (:). Because of space limitations, an Item Name may sometimes appear as incomplete. For further Item Name identification, the U.S. Federal Cataloging Handbook H6-1 can be utilized where possible.

ABBREVIATIONS

ACTR	ACTUATOR	PLSTC	PLASTIC
ASSY	ASSEMBLY	QTZ	QUARTZ
CAP	CAPACITOR	RECP	RECEPTACLE
CER	CERAMIC	RES	RESISTOR
CKT	CIRCUIT	RF	RADIO FREQUENCY
COMP	COMPOSITION	SEL	SELECTED
CONN	CONNECTOR	SEMICOND	SEMICONDUCTOR
ELCTLT	ELECTROLYTIC	SENS	SENSITIVE
ELEC	ELECTRICAL	SEP	SEPARATELY
FXD	FIXED	VAR	VARIABLE
INCAND	INCANDESCENT	WW	WIREWOUND
LED	LIGHT EMITTING DIODE	XFMR	TRANSFORMER
NONWIR	NON WIREWOUND	XTAL	CRYSTAL

CROSS INDEX MFR. CODE NUMBER TO MANUFACTURER

MFR.CODE	MANUFACTURER	ADDRESS	CITY,STATE,ZIP
00213	Sage Electronics Corp., Subsidiary of Nytronics, Inc.,	Orange St.	Darlington, SC 29532
01121	Allen-Bradley Co.	1201 2nd St. South	Milwaukee, WI 53204
03508	General Electric Co., Semi-Conductor Products Dept.	Electronics Park	Syracuse, NY 13201
04713	Motorola, Inc., Semiconductor Products Div.	5005 E. McDowell Rd.	Phoenix, AZ 85008
07263	Fairchild Semiconductor, A Div. of Fairchild Camera and Instrument Corp.	464 Ellis St.	Mountain View, CA 94040
07910	Teledyne Semiconductor	12515 Chadron Ave.	Hawthorne, CA 90250
08806	General Electric Co., Miniature Lamp Products Dept.	Nela PK.	Cleveland, OH 44112
14099	Semtech Corp.	652 Mitchell Rd.	Newbury Park, CA 91320
14936	General Instrument Corp., Semiconductor Products Group	600 W. John St.	Hicksville, NY 11802
18324	Signetics Corp.	811 E. Arques	Sunnyvale, CA 94086
28480	Hewlett-Packard Co., Corporate Hq.	1501 Page Mill Rd.	Palo Alto, CA 94304
56289	Sprague Electric Co.		North Adams, MA 01247
58474	Superior Electric Co., The	383 Middle St.	Bristol, CT 06010
71400	Bussman Mfg., Division of McGraw Edison Co.	2536 W. University St.	St. Louis, MO 63107
71590	Centralab Electronics, Div. of Globe-Union, Inc.	5757 N. Green Bay Ave.	Milwaukee, WI 53201
73138	Beckman Instruments, Inc., Helipot Div.	2500 Harbor Blvd.	Fullerton, CA 92634
75042	TRW Electronic Components, IRC Fixed Resistors, Philadelphia Division	401 N. Broad St.	Philadelphia, PA 19108
80009	Tektronix, Inc.	P. O. Box 500	Beaverton, OR 97005
81483	International Rectifier Corp.	9220 Sunset Blvd.	Los Angeles, CA 90069
90201	Mallory Capacitor Co., Div. of P. R. Mallory Co., Inc.	3029 E. Washington St.	Indianapolis, IN 46206

Ckt No.	Tektronix Part No.	Serial/Model No. Eff	Dscont	Name & Description	Mfr Code	Mfr Part Number
A1	670-3252-00			CKT BOARD ASSY:MAIN	80009	670-3252-00
C10	283-0081-00			CAP.,FXD,CER DI:0.1UF,+80-20%,25V	56289	36C600
C12	290-0524-00			CAP.,FXD,ELCTLT:4.7UF,20%,10V	90201	TDC475M010EL
C14	283-0081-00			CAP.,FXD,CER DI:0.1UF,+80-20%,25V	56289	36C600
C20	290-0324-00			CAP.,FXD,ELCTLT:750UF,+75-10%,40V	56289	39D757G040HJ4
C35	290-0524-00			CAP.,FXD,ELCTLT:4.7UF,20%,10V	90201	TDC475M010EL
C64	290-0524-00			CAP.,FXD,ELCTLT:4.7UF,20%,10V	90201	TDC475M010EL
C75	290-0519-00			CAP.,FXD,ELCTLT:100UF,20%,20V	56289	196D107X0020MA3
CR20	152-0488-00			SEMICOND DEVICE:SILICON,200V,1500MA	14936	KBP-02-8
CR35	152-0141-02			SEMICOND DEVICE:SILICON,30V,150MA	07910	CD8220
CR36	152-0141-02			SEMICOND DEVICE:SILICON,30V,150MA	07910	CD8220
CR38	152-0141-02			SEMICOND DEVICE:SILICON,30V,150MA	07910	CD8220
CR39	152-0141-02			SEMICOND DEVICE:SILICON,30V,150MA	07910	CD8220
CR42	152-0141-02			SEMICOND DEVICE:SILICON,30V,150MA	07910	CD8220
CR65	152-0141-02			SEMICOND DEVICE:SILICON,30V,150MA	07910	CD8220
CR75	152-0040-00			SEMICOND DEVICE:SILICON,600V,1A	14099	SC-6
DS10	150-1001-00			LAMP,LED:RED,2V,100MA	28480	5082-4403
DS40	150-1001-00			LAMP,LED:RED,2V,100MA	28480	5082-4403
DS75	150-0048-00			LAMP,INCAND:5V,60MA	08806	683
F10	159-0014-00			FUSE,CARTRIDGE:3GA,5A,250V,FAST-BLOW	71400	MTH5
J75	129-0064-01			POST,BDG,ELEC:RED,5-WAY MINIATURE	58474	BB10167G2BX
J76	129-0064-00			POST,BDG,ELEC:CHARCOAL,5-WAY MINIATURE	58474	BINP BB10167G13T
J77	129-0064-02			POST,BDG,ELEC:WHITE,5-WAY,MINIATURE	58474	DF21WTC
Q10	151-0515-01			TRANSISTOR:50V,8A	04713	2N4441
Q25	151-0342-00			TRANSISTOR:SILICON,PNP	07263	2N4249
Q45	151-0342-00			TRANSISTOR:SILICON,PNP	07263	2N4249
Q50	151-0364-00			TRANSISTOR:SILICON,PNP	03508	X43C181
Q52	151-0190-00			TRANSISTOR:SILICON,NPN	04713	2N3904
R10	315-0911-00			RES.,FXD,COMP:910 OHM,5%,0.25W	01121	CB9115
R12	315-0121-00			RES.,FXD,COMP:120 OHM,5%,0.25W	01121	CB1215
R22	301-0222-00			RES.,FXD,COMP:2.2K OHM,5%,0.50W	01121	EB2225
R24	321-0129-00			RES.,FXD,FILM:215 OHM,1%,0.125W	75042	CEAT0-2150F
R25	321-0181-00			RES.,FXD,FILM:750 OHM,1%,0.125W	75042	CEAT0-7500F
R30	311-1563-00			RES.,VAR,NONWIR:1K OHM,20%,0.50W	73138	91A-10000M
R31	321-0239-00			RES.,FXD,FILM:3.01K OHM,1%,0.125W	75042	CEAT0-3011F
R32	321-0238-00			RES.,FXD,FILM:2.94K OHM,1%,0.125W	75042	CEAT0-2941F
R33	321-0240-00			RES.,FXD,FILM:3.09K OHM,1%,0.125W	75042	CEAT0-3091F
R35	311-1524-00			RES.,VAR,NONWIR:20K OHM,10%,1W	01121	11M338
R37	315-0102-00			RES.,FXD,COMP:1K OHM,5%,0.25W	01121	CB1025
R40	315-0911-00			RES.,FXD,COMP:910 OHM,5%,0.25W	01121	CB9115
R42	315-0273-00			RES.,FXD,COMP:27K OHM,5%,0.25W	01121	CB2735
R45	321-0254-00			RES.,FXD,FILM:4.32K OHM,1%,0.125W	75042	CEAT0-4321F
R48	315-0102-00			RES.,FXD,COMP:1K OHM,5%,0.25W	01121	CB1025
R50	301-0680-00			RES.,FXD,COMP:68 OHM,5%,0.50W	01121	EB6805
R52	315-0912-00			RES.,FXD,COMP:9.1K OHM,5%,0.25W	01121	CB9125
R55	311-1524-00			RES.,VAR,NONWIR:20K OHM,10%,1W	01121	11M338
R56	315-0331-00			RES.,FXD,COMP:330 OHM,5%,0.25W	01121	CB3315
R57	315-0331-00			RES.,FXD,COMP:330 OHM,5%,0.25W	01121	CB3315
R60	321-0192-00			RES.,FXD,FILM:976 OHM,1%,0.125W	75042	CEAT0-9760F
R61	315-0121-00			RES.,FXD,COMP:120 OHM,5%,0.25W	01121	CB1215

Ckt No.	Tektronix Part No.	Serial/Model No. Eff	Dscont	Name & Description	Mfr Code	Mfr Part Number
R64	315-0121-00			RES.,FXD,COMP:120 OHM,5%,0.25W	01121	CB1215
R65	315-0472-00			RES.,FXD,COMP:4.7K OHM,5%,0.25W	01121	CB4725
R67	315-0912-00			RES.,FXD,COMP:9.1K OHM,5%,0.25W	01121	CB9125
R70	308-0548-00			RES.,FXD,WW:0.1 OHM,3%,5.0W	00213	1550S-R1000H
R75	315-0331-00			RES.,FXD,COMP:330 OHM,5%,0.25W	01121	CB3315
S35	260-1208-00			SWITCH,PUSH:DPDT	71590	2KAB010000-359
S10	260-1310-01			SWITCH,PUSH:	71590	2KAA001000-437
U35	156-0158-00			MICROCIRCUIT,LI:DUAL OPERATIONAL AMPLIFIER	18324	S5558V
U65	156-0067-00			MICROCIRCUIT,LI:OPERATIONAL AMPLIFIER	07263	UA741
VR12	152-0280-00			SEMICOND DEVICE:ZENER,0.4W,6.2V,5%	04713	1N753A
VR20	152-0175-00			SEMICOND DEVICE:ZENER,0.4W,5.6V,5%	04713	1N752A
VR22	152-0306-00			SEMICOND DEVICE:ZENER,0.4W,9.1V,5%	81483	1N960B
VR25	152-0212-00			SEMICOND DEVICE:ZENER,0.5W,9V,5%	04713	SZ50646

SERVICE INFORMATION

SYMBOLS AND REFERENCE DESIGNATORS

Electrical components shown on the diagrams are in the following units unless noted otherwise:

Capacitors =	Values one or greater are in picofarads (pF).
	Values less than one are in microfarads (μF).
Resistors =	Ohms (Ω)

Symbols used on the diagrams are based on ANSI Y32.2 – 1970.

Logic symbology is based on MIL-STD-806B in terms of positive logic. Logic symbols depict the logic function performed and may differ from the manufacturer's data.

The following special symbols are used on the diagrams:

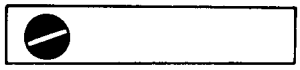

External Screwdriver adjustment.

External control or connector.

Clockwise control rotation in direction of arrow.

Refer to diagram number indicated in diamond.

Refer to waveform number indicated in hexagon.

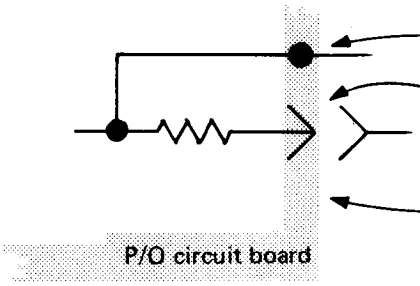

Connection soldered to circuit board.

Connection made to circuit board with interconnecting pin.

Blue tint encloses components located on circuit board.

INPUT-OUTPUT ASSIGNMENTS FOR PLUG-IN REAR INTERFACE CONNECTOR

Remarks	Maximum Recommended Loads	Active Level	Output or Input	Pin B		Pin A	Output or Input	Active Level	Maximum Recommended Loads	Remarks
				28		28				
				28		28				
				27		27				
Set CURRENT LIMIT Control to midrange	None (5 kΩ)	0 to 0.4 V Floating[1]	+Input Remote Current Limit	26*		26				
Set VOLTS control to 4.25 V	None (5 kΩ)	+3 V to +5.5 V dc	Input Remote Voltage Control	25*		25				
Connect to (−) terminal at load	None		Input (−) Remote Sense	24*		24				
Connect to (+) terminal at load	None		Input (+) Remote Sense	23*		23				
(+) output of PS 505	4A	+3 V to +5.5 V dc	Output	22*		*22	Output	+3 to +5.5 V dc	4A	(+) output of PS 505
(−) output of PS 505	4A	(−) common	Output	21*	Power Supply Barrier Slot	*21	Output	(−) common	4A	(−) output of PS 505
				20		20				
				19		19				
				18		18				
				17		17				
				16		16				
				15		15				
				14		14				
			25 VAC winding	13		13	25 VAC winding			
			+33.5 V filtered DC	12		12	+33.5 V filtered DC			
			Collector Lead of PNP Series-Pass	11		11	Base Lead of PNP Series-Pass			
			Transformer/ shield lead	10		10	Emitter Lead of PNP Series-Pass			
			±33.5 V common return	9*		*9	±33.5 V common return			
			−33.5 V common return	8		8	−33.5 V filtered dc			
			Collector Lead of NPN Series-Pass	7*	TM 500 Barrier Slot	*7	Emitter Lead of NPN Series-Pass			
			No connection	6		*6	Base Lead of NPN Series-Pass			
			17.5 VAC winding	5		5	17.5 VAC winding			
			+11.5 V common return	4*		*4	+11.5 V common return			
			+11.5 V common return	3*		*3	+11.5 V common return			
			+11.5 V filtered DC	2*		*2	+11.5 V filtered DC			
			25 VAC winding	1*	Rear-View of Plug-in	*1	25 VAC winding			
				B		A				

Assignments listed for pins 1A — 13A and 1B — 13B are available in all power modules; however, only those pins marked with an asterisk (*) are used by the PS 505.

[1]Connect voltage between pins 26B(+) and 23B(−). Parallel capacitors may be needed to stop oscillations.

Ⓐ

CONTROLS AND CONNECTORS

VOLTS Control and Indicator

Continuously variable control that selects 3.0 to 5.5 volts. Indicator lights when power is applied to the PS 505 (OUTPUT button pressed). Brightness varies with the output voltage.

NON-FLOATING Indicator

Light-emitting diode indicates when the PS 505 is installed in a standard compartment of a Power Module, limiting the current output. The negative output terminal of the PS 505 should be connected to ground to prevent any accidental shorting of the +11.5 V Power Module supply, since other plug-ins in the Power Module may reference this supply to ground.

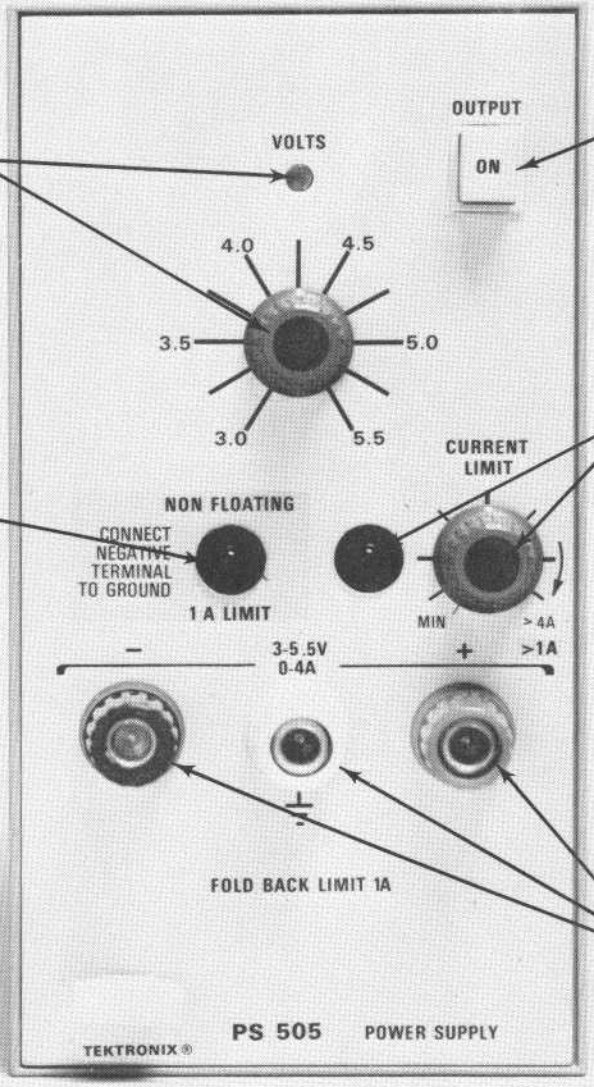

OUTPUT Pushbutton

When pressed, applies power from the Power Module to the PS 505.

CURRENT LIMIT Control and Indicator

Continuously variable control that selects output current limit from 0 to at least 4 A. Light-emitting diode indicates when hard limiting occurs.

Output Terminals

5-way binding-post terminals that provide floating 3.0 to 5.5 V, 4 A (plug-in installed in TM 504 or TM 506 high power compartment) or 3.0 to 5.5 V, 1 A negative grounded (plug-in installed in standard compartment).

Adjustment is generally required after a repair has been made, or after long time intervals in which normal aging of components may affect instrument accuracy.

To ensure instrument accuracy, check the calibration every 2000 hours of operation, or every six months if used infrequently.

NOTE

OVERHAUL SERVICES AVAILABLE

Tektronix, Inc. provides complete instrument repair and calibration at local Field Service Centers and at the Factory Service Center. Contact your local Tektronix Field Office or representative for further information.

Before complete calibration, thoroughly clean and inspect this instrument as outlined in the Service section of the Power Module manual. The Power Module manual also contains information for general maintenance of this instrument, including preventive maintenance, component identification and replacement, etc.

WARNING

Dangerous potentials exist at several points throughout this instrument. When the instrument is operated with the covers removed, do not touch exposed connections or components. Disconnect power before cleaning the instrument or replacing parts.

Equipment Required

1. **TM 500 Series Power Module** having a high power compartment.

2. **Variable autotransformer.** Must be capable of supplying sufficient wattage (depends on what plug-in modules are installed) over a range of 90 to 132 Vac or 180 to 264 Vac. The autotransformer must also have an ac voltmeter to indicate output voltage.

3. **A dc voltmeter** having an accuracy within ±0.1% and a measurement range of 6 volts. For example, a DM 501 Digital Multimeter (operates in a TM 500 Series Power Module), or a dc voltmeter may be used.

4. **A dc ammeter** having an accuracy within 3% and a measurement range of 5 amps. For example, a Triplett 630NA multimeter.

5. **Test Oscilloscope.** Must have a minimum bandpass of 500 Hz and a deflection factor of 5 mV/div with a 1X probe. For example, a 5103N/D10 Oscilloscope with 5B10N Time Base/Amplifier plug-in, a 5A18N Dual Trace Amplifier plug-in, and a P6028 Probe. Any oscilloscope — 1X probe combination that will meet the listed requirements may be used.

6. **Load resistor:** 1 ohm, 20 watts, ±5%. To be obtained locally.

7. **Load resistor:** 3 ohm, 5 watts, ±5%. To be obtained locally.

Preliminary Procedure

NOTE

The performance of this instrument can be checked at any temperature within the 0° C to +50° C range. Make any adjustment at a temperature of +25° C, ±5° C.

a. Check that the correct nominal line selector block (110 Vac or 220 Vac) has been installed on the TM 500 Series Power Module line selector pins and that the regulating range selected includes the input line voltage, see Installation section of Power Module manual..

b. Connect Power Module to the variable autotransformer and the autotransformer to the line voltage source.

c. Remove the PS 505 side covers and install the Power Supply into the far right (high power) compartment of the Power Module.

d. Set the autotransformer to the nominal line voltage that the Power Module line selector is set to and apply power to the PS 505 by pulling the Power Module Power switch out.

ADJUSTMENTS

e. Set the following controls:

VOLTS	Fully ccw
OUTPUT	Off (out position)
CURRENT LIMIT	Fully ccw

1. Adjust 5.5 Adj, R30

Connect the meter leads from the dc voltmeter to the PS 505 + and − binding posts at the monitor connection points (see drawing insert). Press in the PS 505 OUTPUT pushbutton.

Check for a dc voltmeter reading between 2.5 and 3.5 volts. Slowly turn the PS 505 VOLTS control cw and check for a steady increasing voltage that does not exceed 5.5 volts at the maximum cw position of the control.

If the check above is not met, adjust 5.5 Adj, R30 until the maximum voltage obtained at the maximum cw position of the VOLTS control is 5.5 V, ±0.05 V. Rotate the VOLTS control fully ccw and check for a voltmeter reading of 3 V ±0.15 V.

2. Check Line Regulation

With the dc voltmeter still connected to the PS 505 and the VOLTS control set fully ccw, connect a 1 ohm, 20 watt load resistor in series with the dc ammeter, then connect the combination between the + and − binding posts load connection points (see drawing insert). Check that the CURRENT LIMIT indicator is lit. Rotate the CURRENT LIMIT control fully clockwise and check that the CURRENT LIMIT indicator is not lit.

Turn the PS 505 VOLTS control cw until the ammeter reads 4A. Note the dc voltmeter reading. Raise the autotransformer voltage 10% and check that the dc voltmeter reading does not vary by more than ±10 mV from the noted dc voltmeter reading. Lower the autotransformer voltage 10% below the nominal line voltage and again check for a dc voltmeter reading within ±10 mV of the noted voltmeter reading.

Return the autotransformer voltage to the nominal line voltage and check for a dc voltmeter reading within ±5 mV of the noted dc voltmeter reading.

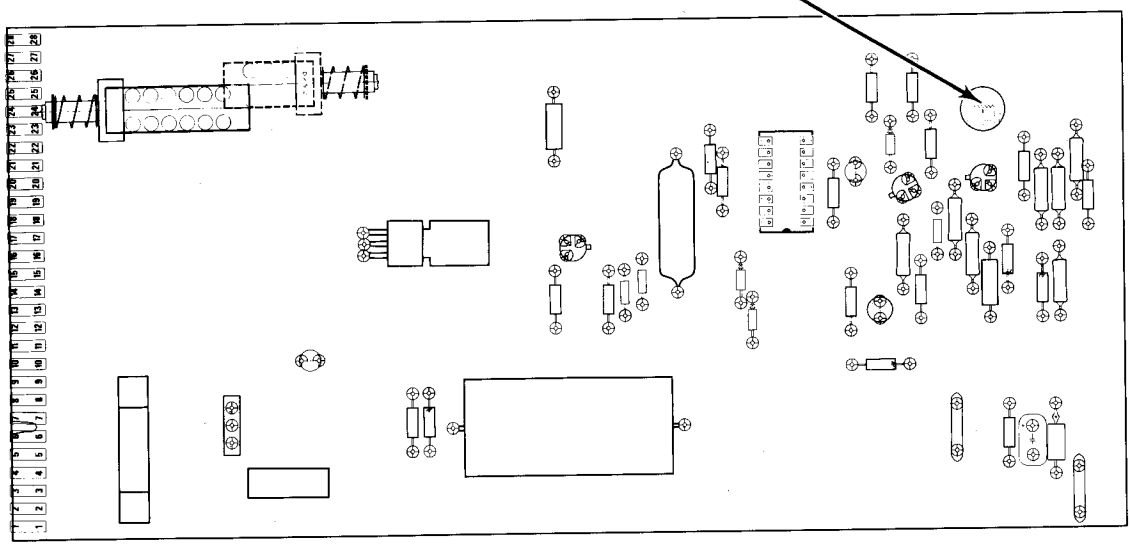

Again note the dc voltmeter reading, then disconnect the 1 ohm load resistor and the ammeter. Check for dc voltmeter reading change of less than ±5 mV from the second noted dc voltmeter reading. Raise the autotransformer voltage 10% above the nominal line voltage and check that the dc voltmeter reading remains within ±10 mV of the second noted voltmeter reading. Lower the autotransformer 10% below the nominal line voltage and again check for a voltmeter reading within ±10 mV of the second noted voltmeter reading. Return the autotransformer voltage to the nominal line voltage.

Disconnect the dc voltmeter.

3. Check Ripple

Connect a 1 ohm, 20 watt load resistor in series with the dc ammeter, then connect the combination between the + and − binding posts load connection points (see drawing insert).

Connect the 1X probe from the oscilloscope vertical input connector to the + and − binding posts monitor connection points (see drawing insert). The probe ground clip is connected to the − binding post. Set the test oscilloscope controls for a vertical sensitivity of 5 mV/div, ac vertical coupling, sweep rate of 5 ms with line triggering. Vary the autotransformer from nominal line voltage to 10% above nominal line voltage and then 10% below nominal line voltage and back to nominal line voltage. Check that the test oscilloscope displayed ripple amplitude does not exceed 3 mV peak-to-peak as the autotransformer is varied.

Disconnect the test oscilloscope.

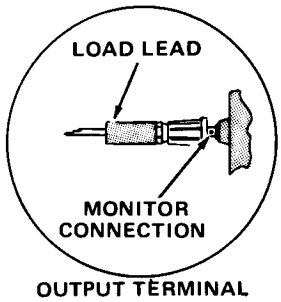

4. Check Foldback

With the load resistor and ammeter connected as in step 3, slowly turn the PS 505 VOLTS control cw while observing the ammeter reading. When the ammeter reads between 4.1A and 4.5A, the current should suddenly drop to an ammeter reading between 0.5A and 1.5A. The PS 505 is now in its foldback condition and will stay there until one condition of part A and one condition of part B below are satisfied.

A. 1. Lower the PS 505 output voltage.

2. Increase the load resistance.

B. 1. Push the PS 505 OUTPUT pushbutton to its off position then push it to its on position.

2. Turn the PS 505 CURRENT LIMIT control fully ccw then fully cw.

Disconnect the load resistor and ammeter. Press the PS 505 OUTPUT pushbutton to its off position.

5. Check Reduced Operation

Remove the PS 505 from the far right (high power) compartment of the Power Module and install it into one of the lower powered compartments.

Turn the PS 505 VOLTS control fully ccw and check that the NON FLOATING indicator lights, then connect a 3 ohm, 5 watt load resistor in series with the dc ammeter. Connect the load resistor-ammeter combination between the + and − binding posts load connection points (see drawing insert).

Slowly turn the PS 505 VOLTS control to its fully cw position while observing both the PS 505 CURRENT LIMIT indicator and the ammeter reading.

Check that the ammeter indicates increasing current to at least 1A but not more than 1.5A, at which time the PS 505 CURRENT LIMIT indicator lights. Note that any further increase in output voltage does not increase the output current beyond the point where current limiting becomes active.

Disconnect all test equipment.

PARTS LOCATIO

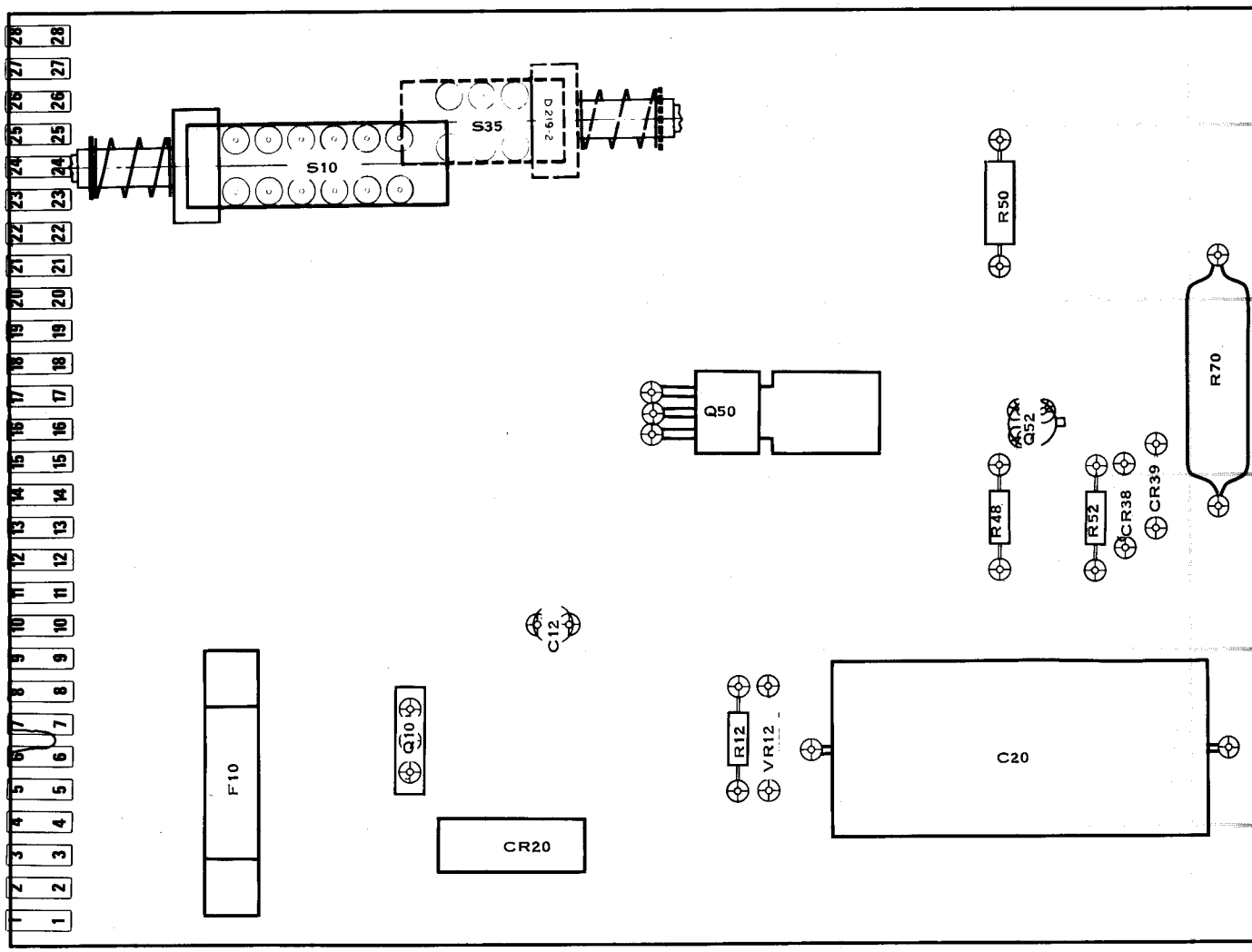

S LOCATION GRID

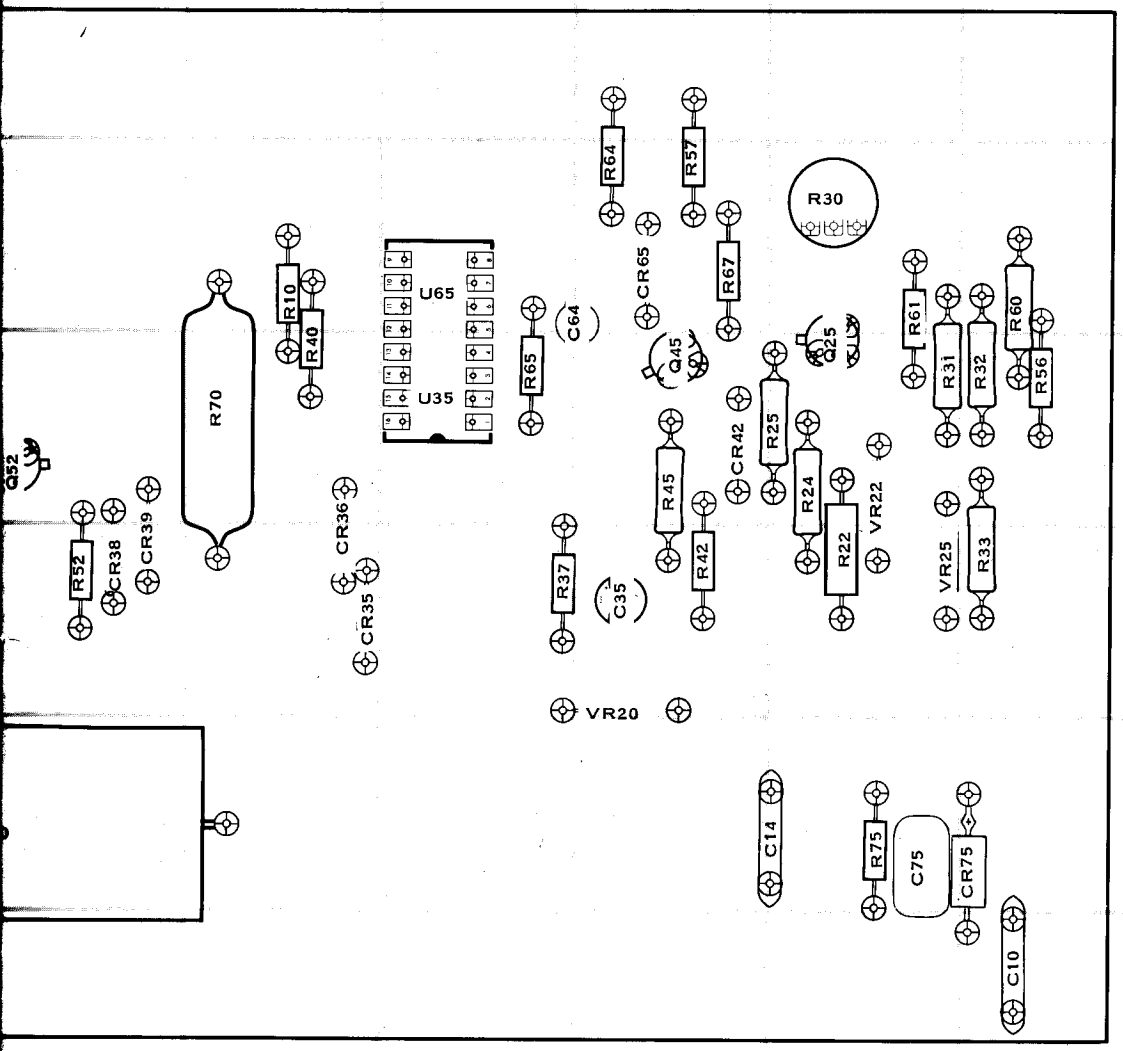

CKT NO	GRID LOC	CKT NO	GRID LOC
C10	L6	R32	L3
C12	D4	R33	L4
C14	K5	R37	I4
C20	G5	R40	H3
C35	J4	R42	J4
C64	I2	R45	J3
C75	K5	R48	F4
CR20	D6	R50	F2
CR35	H4	R52	G4
CR36	H4	R56	L3
CR38	G4	R57	J2
CR39	G4	R60	L2
CR42	J3	R61	K2
CR65	J2	R64	J2
CR74	L5	R65	I3
F10	B5	R67	J2
Q10	C5	R70	H3
Q25	K3	R75	K5
Q45	J3		
Q50	E3	S10	C2
Q52	G3	S35	D1
R10	H2	U35	I3
R12	E5	U65	I2
R22	K4		
R24	K3	VR12	E5
R25	K3	VR20	J4
R30	K2	VR22	K3
R31	K3	VR25	K4

Ⓐ

THEORY OF OPERATION

Reference Supply

The reference supply consists of constant current source Q25 and VR25, and current source Q45. The supply furnishes constant current for the current limiting circuitry, −5 volts for the operational amplifiers, and a stable reference voltage for the voltage error amplifier.

Voltage Error Amplifier

Voltage error amplifier U35B drives the current amplifier which is composed of Q50, Q52 and a transistor that is located in the TM 500-Series Power Module. VOLTS control, R35 sets the stable reference voltage (variable from 3 to 5.5 volts) for U35B1. Internal adjustment (5.5 Adj) R30 sets the upper output voltage limit for R35 at 5.5 volts.

Current Limit Monitor

Current limit monitor U35A compares the voltage across current sensing resistor, R70 with the reference voltage set by CURRENT LIMIT control R55. When the voltage across current sensing resistor R70 is larger than the reference voltage, the output of U35A goes negative. U35A output pulling negative turns on the CURRENT LIMIT light emitting diode (led) DS40, forward biases CR39 and reverse biases CR38, lowering the output voltage.

Current Foldback Limit

Fixed current foldback limit U65 compares the voltage across current sensing resistor R70 with a fixed voltage set by voltage divider R61-R60. When the voltage across R70 is greater than the fixed voltage of R61-R60, the output of U65 goes negative causing the voltage across CURRENT LIMIT control R55 to be reduced. The reduced voltage across R55 causes U35A to latch into its current limiting mode, which reduces the output current to a maximum of 1.5A. To reset U35A to normal operation turn TM 500 Series Power Module power off, then reduce the current load of the PS 505 to within acceptable limits (depends on TM 500 Series Power Module connection, see Operating Instructions) before turning TM 500 Series Power Module power on.

Overvoltage Protection

When the voltage at the PS 505 front-panel + output terminal reaches about 7 volts overvoltage protection silicon controlled rectifier (scr) Q10 turns on. Q10 turning on shorts the +11.5 volt supply to the − output terminal causing the Fuse F10 to blow.

Output Current Selection

If the PS 505 is operated in any compartment of a TM 500 Series Power Module except the high power compartment of the TM 504 and TM 506 Power Modules, S10 reduces the current limit to 1A, turns on NON FLOATING indicator led, and disables the foldback limit protection U65.

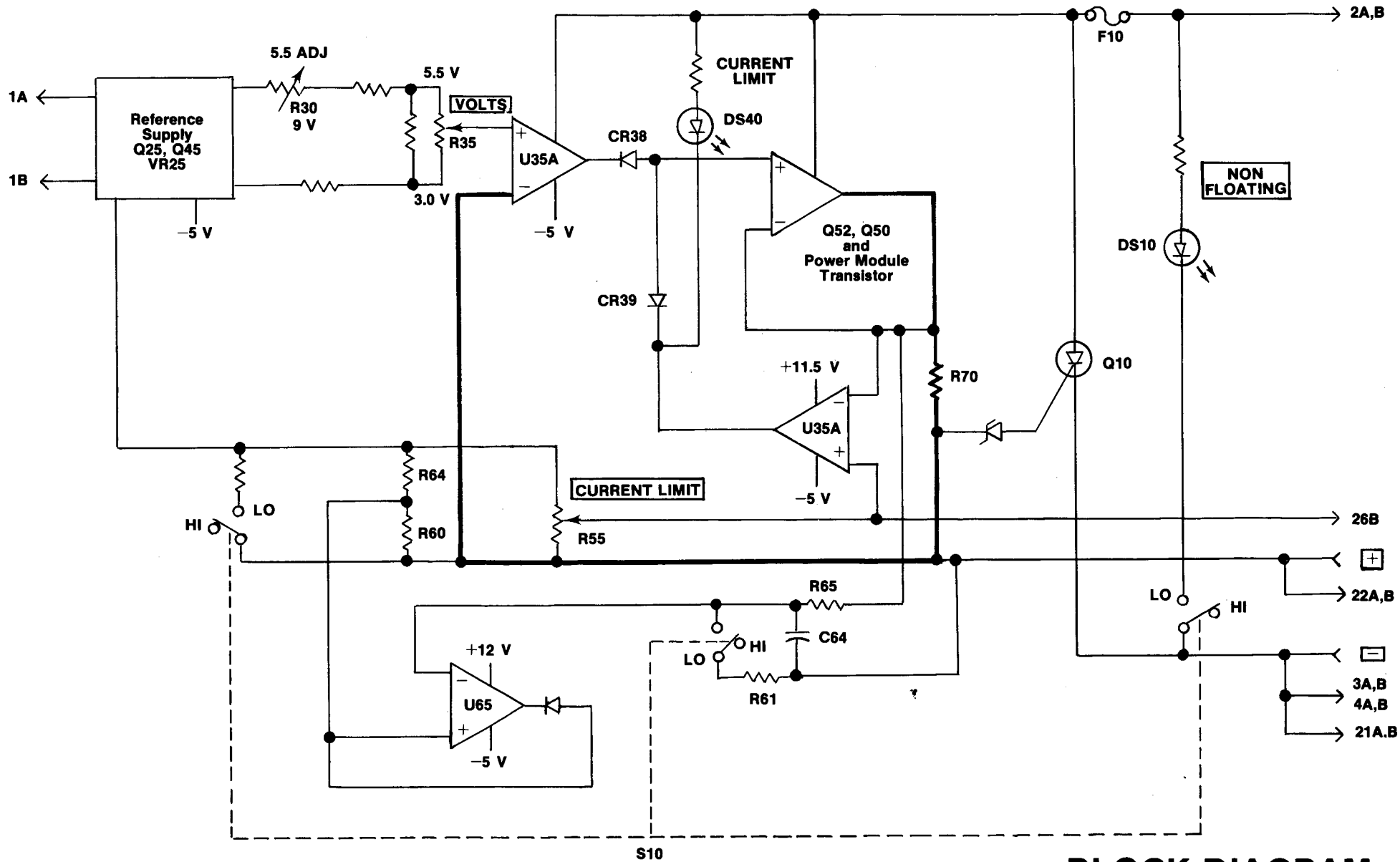

BLOCK DIAGRAM

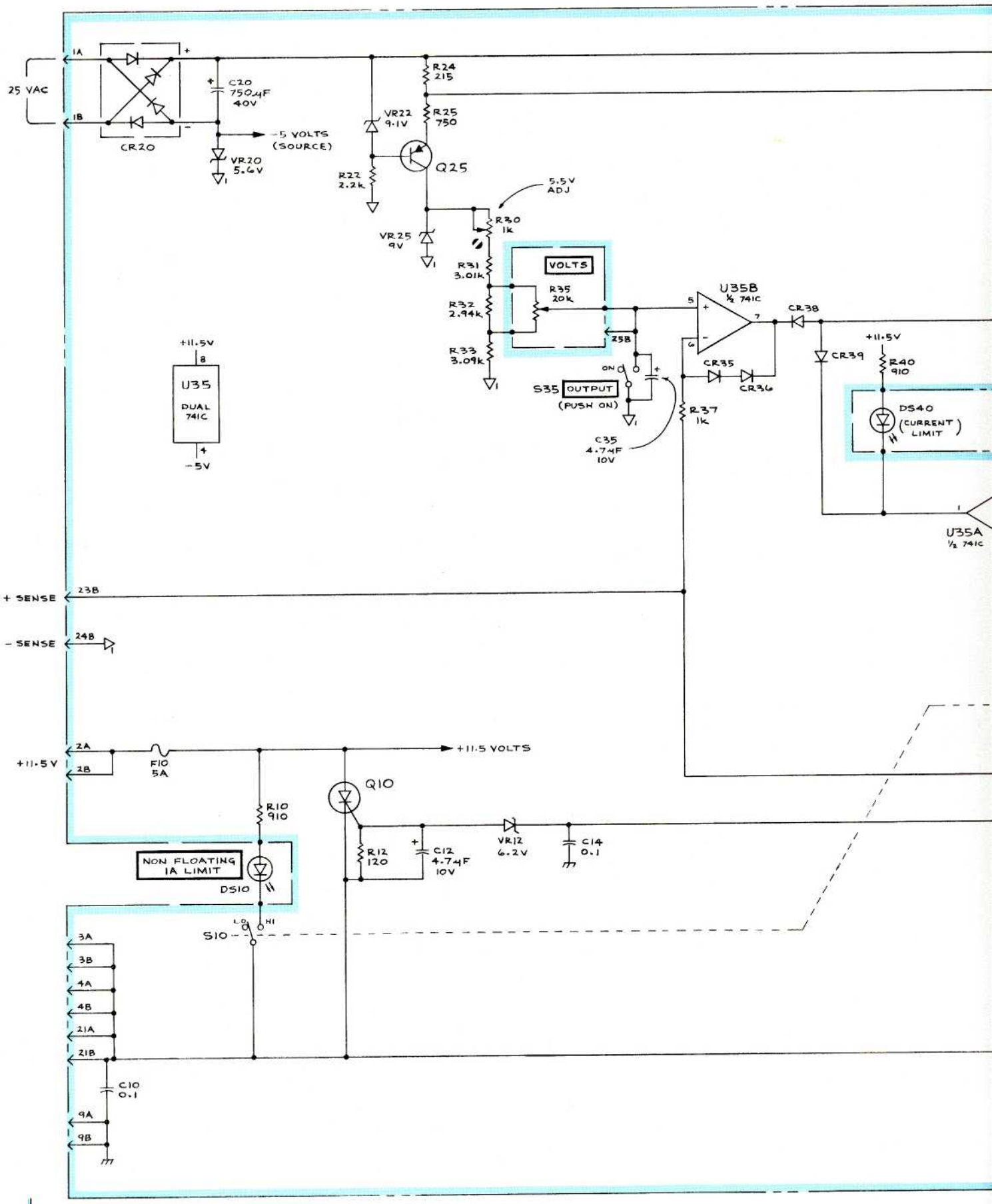
25 VAC
1A
1B
CR20
C20
750µF
40V
VR20
5.6V
-5 VOLTS
(SOURCE)
VR22
9.1V
R22
2.2k
R24
215
R25
750
Q25
VR25
9V
5.5V
ADJ
R30
1k
R31
3.01k
R32
2.94k
R33
3.09k
VOLTS
R35
20k
25B
S35
OUTPUT
(PUSH ON)
ON
C35
4.7µF
10V
R37
1k
U35B
½ 741C
CR38
CR35
CR36
CR39
+11.5V
R40
910
DS40
(CURRENT LIMIT)
U35A
½ 741C
+11.5V
8
U35
DUAL
741C
4
-5V
+ SENSE
23B
- SENSE
24B
2A
2B
+11.5V
F10
5A
+11.5 VOLTS
Q10
R10
910
R12
120
C12
4.7µF
10V
VR12
6.2V
C14
0.1
NON FLOATING
1A LIMIT
D510
S10
LO
HI
3A
3B
4A
4B
21A
21B
C10
0.1
9A
9B

PS 505

Ⓐ

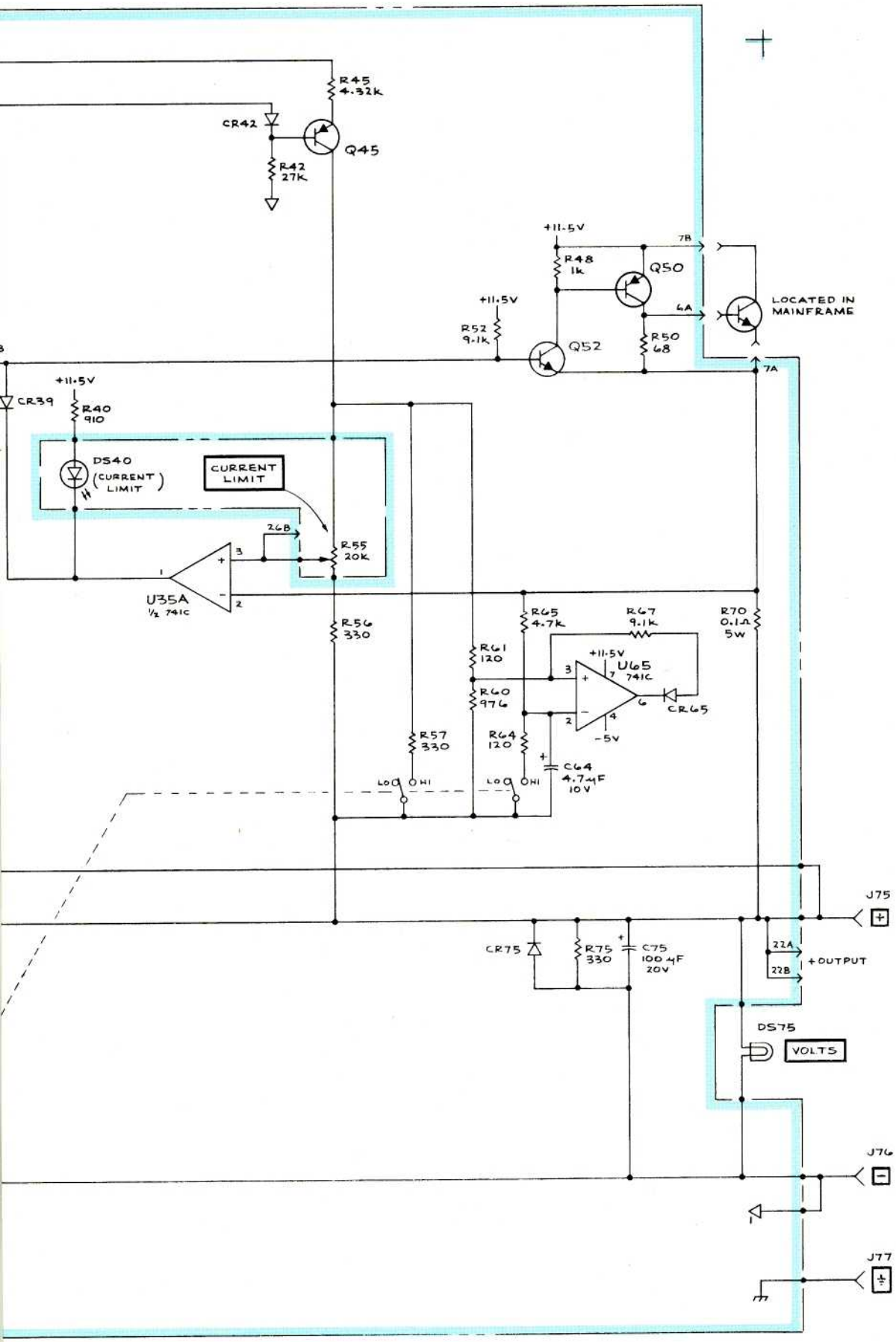

POWER SUPPLY ⟨1⟩ DEH 0674

POWER SUPPLY

MECHANICAL REPLACEABLE PARTS LIST

PARTS ORDERING INFORMATION

Replacement parts are available from or through your local Tektronix, Inc. Field Office or representative.

Changes to Tektronix instruments are sometimes made to accommodate improved components as they become available, and to give you the benefit of the latest circuit improvements developed in our engineering department. It is therefore important, when ordering parts, to include the following information in your order: Part number, instrument type or number, serial number, and modification number if applicable.

If a part you have ordered has been replaced with a new or improved part, your local Tektronix, Inc. Field Office or representative will contact you concerning any change in part number.

Change information, if any, is located at the rear of this manual.

SPECIAL NOTES AND SYMBOLS

X000	Part first added at this serial number
00X	Part removed after this serial number

FIGURE AND INDEX NUMBERS

Items in this section are referenced by figure and index numbers to the illustrations.

INDENTATION SYSTEM

This mechanical parts list is indented to indicate item relationships. Following is an example of the indentation system used in the description column.

1 2 3 4 5 Name & Description

Assembly and/or Component
Attaching parts for Assembly and/or Component
--- * ---
Detail Part of Assembly and/or Component
Attaching parts for Detail Part
--- * ---
Parts of Detail Part
Attaching parts for Parts of Detail Part
--- * ---

Attaching Parts always appear in the same indentation as the item it mounts, while the detail parts are indented to the right. Indented items are part of, and included with, the next higher indentation. The separation symbol --- * --- indicates the end of attaching parts.

Attaching parts must be purchased separately, unless otherwise specified.

ITEM NAME

In the Parts List, an Item Name is separated from the description by a colon (:). Because of space limitations, an Item Name may sometimes appear as incomplete. For further Item Name identification, the U.S. Federal Cataloging Handbook H6-1 can be utilized where possible.

ABBREVIATIONS

"	INCH	FLH	FLAT HEAD	PWR	POWER
#	NUMBER SIZE	FLTR	FILTER	RCPT	RECEPTACLE
ACTR	ACTUATOR	FR	FRAME or FRONT	RES	RESISTOR
ADPTR	ADAPTER	FSTNR	FASTENER	RDG	RIGID
ALIGN	ALIGNMENT	FT	FOOT	RLF	RELIEF
AL	ALUMINUM	FXD	FIXED	RTNR	RETAINER
ASSEM	ASSEMBLED	GSKT	GASKET	SCH	SOCKET HEAD
ASSY	ASSEMBLY	HDL	HANDLE	SCOPE	OSCILLOSCOPE
ATTEN	ATTENUATOR	HEX	HEXAGON	SCR	SCREW
AWG	AMERICAN WIRE GAGE	HEX HD	HEXAGONAL HEAD	SE	SINGLE END
BD	BOARD	HEX SOC	HEXAGONAL SOCKET	SECT	SECTION
BRKT	BRACKET	HLCPS	HELICAL COMPRESSION	SEMICOND	SEMICONDUCTOR
BRS	BRASS	HLEXT	HELICAL EXTENSION	SHLD	SHIELD
BRZ	BRONZE	HV	HIGH VOLTAGE	SHLDR	SHOULDERED
BSHG	BUSHING	IC	INTEGRATED CIRCUIT	SKT	SOCKET
CAB	CABINET	ID	INSIDE DIAMETER	SL	SLIDE
CAP	CAPACITOR	IDENT	IDENTIFICATION	SLFLKG	SELF-LOCKING
CER	CERAMIC	IMPLR	IMPELLER	SLVG	SLEEVING
CHAS	CHASSIS	IN	INCH	SPR	SPRING
CKT	CIRCUIT	INCAND	INCANDESCENT	SQ	SQUARE
COMP	COMPOSITION	INSUL	INSULATOR	SST	STAINLESS STEEL
CONN	CONNECTOR	INTL	INTERNAL	STL	STEEL
COV	COVER	LPHLDR	LAMPHOLDER	SW	SWITCH
CPLG	COUPLING	MACH	MACHINE	T	TUBE
CRT	CATHODE RAY TUBE	MECH	MECHANICAL	TERM	TERMINAL
DEG	DEGREE	MTG	MOUNTING	THD	THREAD
DWR	DRAWER	NIP	NIPPLE	THK	THICK
ELCTRN	ELECTRON	NON WIRE	NOT WIRE WOUND	TNSN	TENSION
ELEC	ELECTRICAL	OBD	ORDER BY DESCRIPTION	TPG	TAPPING
ELCTLT	ELECTROLYTIC	OD	OUTSIDE DIAMETER	TRH	TRUSS HEAD
ELEM	ELEMENT	OVH	OVAL HEAD	V	VOLTAGE
EPL	ELECTRICAL PARTS LIST	PH BRZ	PHOSPHOR BRONZE	VAR	VARIABLE
EQPT	EQUIPMENT	PL	PLAIN or PLATE	W/	WITH
EXT	EXTERNAL	PLSTC	PLASTIC	WSHR	WASHER
FIL	FILLISTER HEAD	PN	PART NUMBER	XFMR	TRANSFORMER
FLEX	FLEXIBLE	PNH	PAN HEAD	XSTR	TRANSISTOR

CROSS INDEX MFR. CODE NUMBER TO MANUFACTURER

MFR.CODE	MANUFACTURER	ADDRESS	CITY,STATE,ZIP
01295	Texas Instruments, Inc., Components Group	P. O. Box 5012	Dallas, TX 75222
08261	Spectra-Strip Corp.	7100 Lampson Ave.	Garden Grove, CA 92642
45722	USM Corp., Parker-Kalon Fastener Div.	1 PeeRay Drive	Clifton, NJ 07014
58474	Superior Electric Co., The	383 Middle St.	Bristol, CT 06010
73743	Fischer Special Mfg. Co.	446 Morgan St.	Cincinnati, OH 45206
74445	Holo-Krome Co.	31 Brook St. West	Hartford, CT 06110
78189	Illinois Tool Works, Inc. Shakeproof Division	St. Charles Road	Elgin, IL 60126
79807	Wrought Washer Mfg. Co.	2100 S. O Bay St.	Milwaukee, WI 53207
80009	Tektronix, Inc.	P. O. Box 500	Beaverton, OR 97005
83385	Central Screw Co.	2530 Crescent Dr.	Broadview, IL 60153

Fig. & Index No.	Tektronix Part No.	Serial/Model No. Eff	Dscont	Qty	1 2 3 4 5 Name & Description	Mfr Code	Mfr Part Number
1-1	337-1399-00			2	SHLD,ELECTRICAL:SIDE	80009	337-1399-00
-2	366-0494-00			2	KNOB:GRAY	80009	366-0494-00
	----- -----			-	. EACH KNOB INCLUDES:		
	213-0153-00			1	. SETSCREW:5-40 X 0.125 INCH,HEX SOC STL	74445	OBD
-3	366-1257-74			1	KNOB,PUSHBUTTON:GRAY--ON	80009	366-1257-74
-4	426-0681-00			1	FR,PUSH BUTTON:GRAY PLASTIC	80009	426-0681-00
-5	366-1422-01			1	KNOB:LATCH	80009	366-1422-01
					(ATTACHING PARTS)		
-6	214-1840-00			1	PIN,KNOB SECRG:	80009	214-1840-00
					- - - * - - -		
-7	129-0064-00			1	POST,BDG,ELEC:CHARCOAL,5-WAY MINIATURE	58474	BINP BB10167G13T
	129-0064-01			1	POST,BDG,ELEC:RED,5-WAY MINIATURE,W/BUSHING	58474	BB10167G2BX
	129-0064-02			1	POST,BDG,ELEC:WHITE,5-WAY,MINIATURE	58474	DF21WTC
					(ATTACHING PARTS FOR EACH)		
-8	210-0457-00			1	NUT,PLAIN,EXT W:6-32 X 0.312 INCH,STL	83385	OBD
					- - - * - - -		
-9	210-0202-00			3	TERMINAL,LUG:SE #6	78189	2104-06-00-2520N
-10	358-0181-00			1	INSULATOR,BSHG:CHARCOAL	58474	BB10166G13BX
	358-0181-01			1	INSULATOR,BSHG:RED	58474	BB1066G2
-11	----- -----			2	RES.,VARIABLE:(SEE R35 AND R55 EPL)		
					(ATTACHING PARTS FOR EACH)		
-12	210-0583-00			1	NUT,PLAIN,HEX:0.25-32 X 0.312 INCH L,BRS	73743	2X20319-402
-13	210-0940-00			1	WASHER,FLAT:0.25 ID X 0.375 INCH OD,STL	79807	OBD
					- - - * - - -		
-14	----- -----			2	LAMP,LED:RED W/HARDWARE(SEE DS10 & DS40 EPL)		
-15	333-1845-00			1	PANEL,FRONT:	80009	333-1845-00
-16	200-0935-00			1	BASE,LAMPHOLDER:0.29 OD X 0.19" L,BK PLSTC	80009	200-0935-00
-17	352-0157-00			1	LAMPHOLDER:WHITE PLASTIC	80009	352-0157-00
-18	378-0602-01			1	LENS,LIGHT:AMBER	80009	378-0602-01
-19	214-1513-01			1	LCH,PLUG-IN RET:	80009	214-1513-01
					(ATTACHING PARTS)		
-20	213-0254-00			1	SCR,TPG,THD CTG:2-56X0.25"100 DEG,FLH STL	45722	OBD
					- - - * - - -		
-21	386-2232-00			1	SUBPANEL,FRONT:	80009	386-2232-00
					(ATTACHING PARTS)		
-22	213-0229-00			4	SCR,TPG,THD FOR:6-20X0.375 100 DEG,FLH STL	83385	OBD
					- - - * - - -		
-23	337-1638-00			1	SHIELD,ELEC:FRONT SUBPANEL	80009	337-1638-00
-24	384-1060-00			1	EXTENSION,SHAFT:3.05 INCHES LONG	80009	384-1060-00
-25	----- -----			1	CKT BOARD ASSY:MAIN(SEE A1 EPL)		
					(ATTACHING PARTS)		
-26	213-0146-00			4	SCR,TPG,THD FOR:6-20 X 0.313 INCH,PNH STL	83385	OBD
					- - - * - - -		
	----- -----			-	. CKT BOARD ASSY INCLUDES:		
-27	136-0260-02			1	. SOCKET,PLUG-IN:16 CONTACT,LOW CLEARANCE	01295	C931602
-28	344-0154-00			2	. CLIP,ELECTRICAL:FOR 0.25 INCH DIA FUSE	80009	344-0154-00
-29	361-0382-00			2	. SPACER,PB SW:BROWN,0.275 INCH LONG	80009	361-0382-00
-30	----- -----			1	. SWITCH,PUSH:(SEE S10 EPL)		
-31	361-0384-00			2	. SPACER,PB SW:0.133 INCH LONG	80009	361-0384-00
-32	----- -----			1	. SWITCH,PUSH:(SEE S35 EPL)		
-33	426-0724-00			1	FR SECT,PLUG-IN:BOTTOM	80009	407-0724-00
-34	214-1061-00			1	SPRING,GROUND:FLAT	80009	214-1061-00
-35	426-0725-00			1	FR SECT,PLUG-IN:TOP	80009	407-0725-00
-36	175-0825-00			FT	WIRE,ELECTRICAL:2 WIRE RIBBON	08261	TEK-175-0825-00
					ACCESSORIES		
	070-1784-00			1	MANUAL,TECH:INSTRUCTION(NOT SHOWN)	80009	070-1784-00
					REPACKAGING		
	065-0151-00			1	CARTON ASSEMBLY: (NOT SHOWN)	80009	065-0151-00

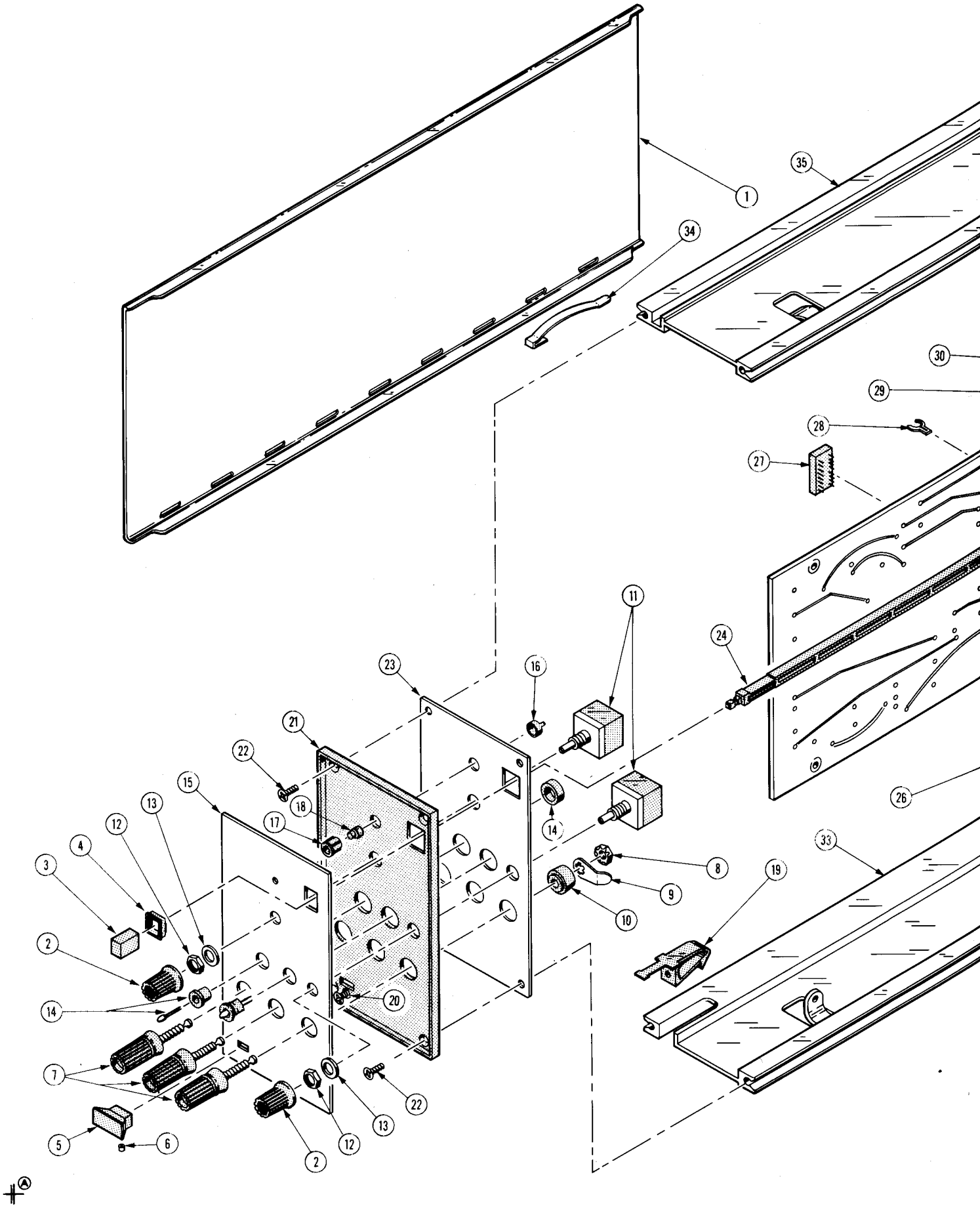
1
35
34
30
29
28
27
11
24
23
16
21
22
15
18
17
14
26
33
8
9
10
19
13
12
4
3
2
20
7
5
6

FIG. 1 EXPLODED

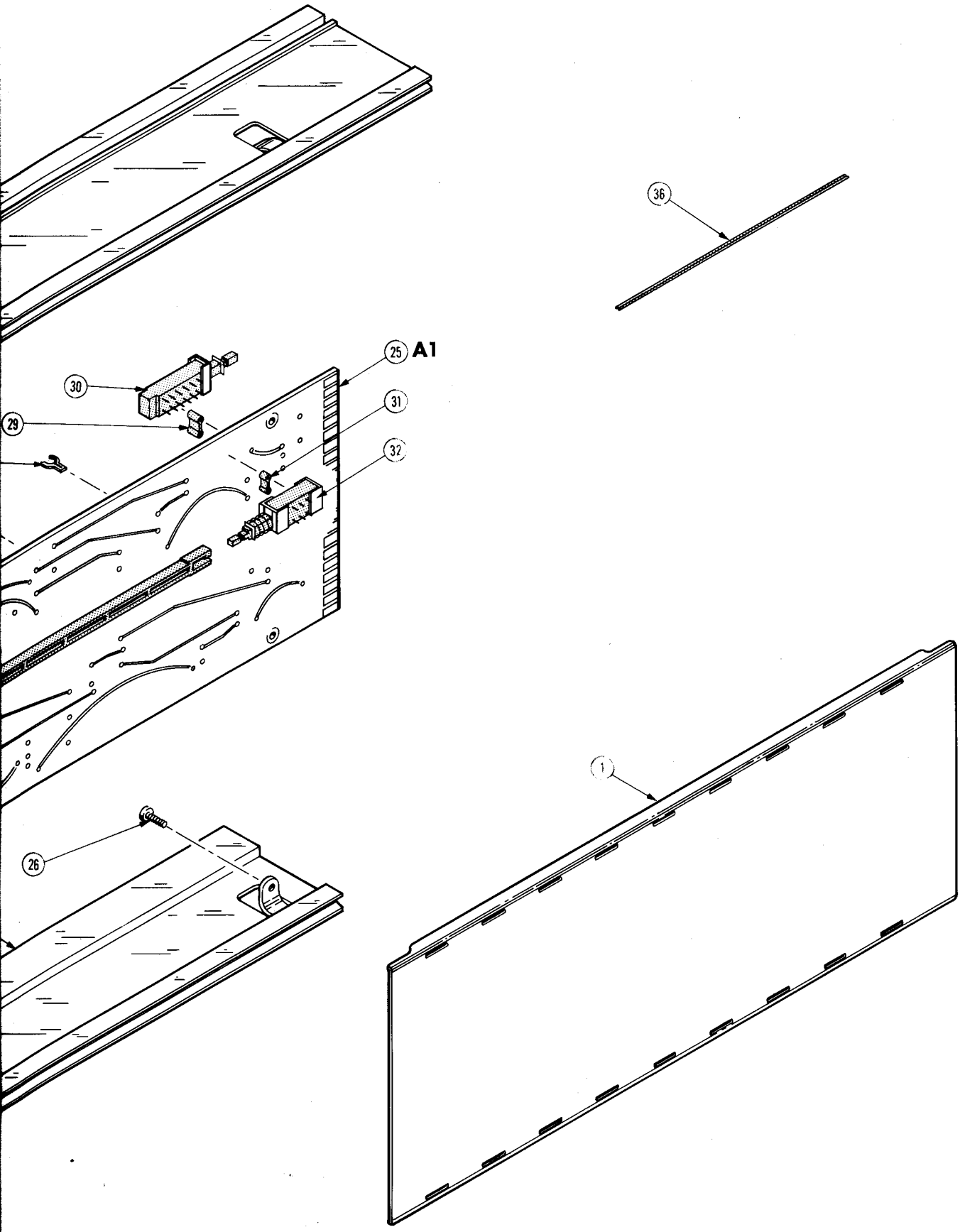

PS 505

MANUAL CHANGE INFORMATION

At Tektronix, we continually strive to keep up with latest electronic developments by adding circuit and component improvements to our instruments as soon as they are developed and tested.

Sometimes, due to printing and shipping requirements, we can't get these changes immediately into printed manuals. Hence, your manual may contain new change information on following pages.

A single change may affect several sections. Sections of the manual are often printed at different times, so some of the information on the change pages may already be in your manual. Since the change information sheets are carried in the manual until ALL changes are permanently entered, some duplication may occur. If no such change pages appear in this section, your manual is correct as printed.

TEKTRONIX®
committed to technical excellence

MANUAL CHANGE INFORMATION

PRODUCT PS 505
EFF SN B010100-up

CHANGE REFERENCE C1/874
DATE 8-19-74

CHANGE:	DESCRIPTION

ELECTRICAL PARTS LIST AND SCHEMATIC CHANGE

CHANGE TO:

R45	321-0252-00	RES.,FXD,FILM:4.12K OHM (nominal value) sel.

ADJUSTMENTS Step 4. Check Foldback

CHANGE TO READ:

With the load resistor and ammeter connected as in step 3, slowly turn the PS 505 VOLTS control cw while observing the ammeter reading. When the ammeter reads between 4.1A and 4.5A, the current should suddenly drop to an ammeter reading between 0.5A and 1.5A. If this change does not occur, select a new value for R45 (4.02K, 4.12K, 4.22K or 4.32K). The PS 505 is now in its foldback condition and will stay there until one condition of part A and one condition of part B below are satisfied.