INSTRUCTION MANUAL

MODEL 3000

SIGNAL GENERATOR

WAVETEK



Serial No. 125957

Purchased 2/5/90
restored to orig. specs 2/27/90
front. panel restored
new attn. knob
new side panels

1975 manu. date
New cost: 4500 (no options)

M22

Service Tech: Don Veit
1-800-428-4424

INSTRUCTION MANUAL

MODEL 3000

SIGNAL GENERATOR



THIS DOCUMENT CONTAINS INFORMATION PROPRIETARY TO WAVETEK. THE INFORMATION IN THIS DOCUMENT IS NOT TO BE USED OR DUPLICATED IN ANY MANNER WITHOUT THE PRIOR APPROVAL, IN WRITING OF WAVETEK.

WAVETEK RF PRODUCTS, INC.
5808 CHURCHMAN BY-PASS
INDIANAPOLIS, IN 46203-6109
TEL. 317/788-9351
TLX: (INST.) 6842041
FAX: 317/788-5999

2-88

WARRANTY

All Wavetek instruments are warranteed against defects in material and workmanship for a period of one year after date of manufacture. Wavetek agrees to repair or replace any assembly or component (except batteries) found to be defective under normal use during this period. Transfermatic Switch assemblies, manufactured by Wavetek, are unconditionally warranteed for the life of the instrument. Wavetek's obligation under this warranty is limited solely to repairing any such instrument which, in Wavetek's sole opinion, proves to be defective within the scope of the warranty when returned to the factory or to an authorized service center. Transportation to the factory or service center is to be prepaid by purchaser. Shipment should not be made without prior authorization by Wavetek.

This warranty does not apply to any products repaired or altered by persons not authorized by Wavetek, or not in accordance with instructions furnished by Wavetek. If the instrument is defective as a result of misuse, improper repair, or abnormal conditions or operations, repairs will be billed at cost.

Wavetek assumes no responsibility for its product being used in a hazardous or dangerous manner either alone or in conjunction with other equipment. High voltage used in some instruments may be dangerous if misused. Special disclaimers apply to these instruments. Wavetek assumes no liability for secondary charges or consequential damages and, in any event, Wavetek's liability for breach of warranty under any contract or otherwise shall not exceed the purchase price of the specific instrument shipped and against which a claim is made.

Any recommendations made by Wavetek for use of its products are based upon tests believed to be reliable, but Wavetek makes no warranty of the results to be obtained. This warranty is in lieu of all other warranties, expressed or implied, and no representative or person is authorized to represent or assume for Wavetek any liability in connection with the sale of our products other than set forth herein.

SCOPE OF THIS MANUAL

This manual provides descriptive material and instructions for the installation, operation, maintenance, and repair of the WAVETEK Model 3000 Signal Generator

CONTENTS

SECTION 1 GENERAL INFORMATION

1.1 INTRODUCTION 1-1
1.2 SPECIFICATIONS 1-2
1.3 OPTIONS. 1-4
1.4 ACCESSORIES. 1-4

SECTION 2 OPERATION

2.1 INTRODUCTION 2-1
2.2 MECHANICAL INSTALLATION. 2-1
2.3 ELECTRICAL INSTALLATION. 2-2
2.4 DESCRIPTION OF FRONT PANEL 2-2
2.5 DESCRIPTION OF REAR PANEL. 2-4
2.6 INSTALLATION CHECKS 2-5
2.7 OPERATING PROCEDURE. 2-7

SECTION 3 THEORY OF OPERATION

3.1 INTRODUCTION 3-1
3.2 OVERALL BLOCK DIAGRAM. 3-1
3.3 C315 - METER BOARD 3-8
3.4 C316 - MODULATION BOARD. 3-9
3.5 DPS2A - POWER SUPPLY 3-10
3.6 DELETED 3-10
3.7 M9W - SWEEP OSCILLATOR 3-11
3.8 M10W - OUTPUT AMPLIFIER. 3-12
3.9 M172 - SWEEP DRIVE/DAC 3-13
3.10 M29-1 FM REFERENCE 3-14
3.11 M30 - CRYSTAL SOURCE 3-15
3.12 M31 - kHz STEPS. 3-16
3.13 M32 - MHz STEPS. 3-17
3.14 M33 - NARROW OSCILLATOR LOCK 3-19
3.15 M34 - WIDE OSCILLATOR LOCK 3-20

SECTION 4 PERFORMANCE TESTS

4.1 INTRODUCTION 4-1
4.2 FREQUENCY RANGE AND RESOLUTION TEST. . . 4-2
4.3 FREQUENCY ACCURACY TEST. 4-3
4.4 FREQUENCY STABILITY TEST 4-5
4.5 OUTPUT LEVEL ACCURACY TESTS. 4-5
4.6 HARMONICS TEST 4-11
4.7 NON-HARMONIC TEST. 4-12
4.8 RESIDUAL AM TEST 4-14
4.9 RESIDUAL FM TEST 4-15
4.10 INTERNAL MODULATION FREQUENCY TEST . . . 4-16
4.11 PERCENT AM ACCURACY TEST 4-17
4.12 AM BANDWIDTH TEST. 4-19
4.13 AM DISTORTION TEST 4-21
4.14 FM DEVIATION ACCURACY TEST 4-22
4.15 FM BANDWIDTH TEST. 4-23

CONTENTS CONTINUED

4.16 FM DISTORTION TEST. 4-25
4.17 IMPEDANCE TEST. 4-26
4.18 RFI TEST. 4-27

SECTION 5 MAINTENANCE

5.1 INTRODUCTION. 5-1
5.2 SERVICE INFORMATION 5-1
5.3 CALIBRATION PROCEDURE 5-3
5.4 TROUBLESHOOTING 5-7

SECTION 6 REPLACEABLE PARTS

6.1 INTRODUCTION. 6-1
6.2 MANUFACTURER'S CODE 6-1

SECTION 7 SCHEMATICS

7.1 INTRODUCTION. 7-1
7.2 SCHEMATIC NOTES 7-1
7.3 ABBREVIATION CODE 7-2
7.4 SCHEMATIC INDEX 7-2

SECTION 8 MANUAL CHANGES AND OPTIONS

8.1 INTRODUCTION. 8-1
8.2 MANUAL CHANGES. 8-1
8.3 OPTIONS 8-1

SECTION 1
GENERAL INFORMATION

1.1 INTRODUCTION

The Model 3000 is a rugged, completely solid-state Signal Generator covering the frequency range of 1 to 520 MHz. The output can be amplitude or frequency modulated and the level can be set between +13 and -137 dBm.

1.1.1 Frequency Characteristics

The frequency of the unit is set via 6 front panel lever/indicator switches which yield a resolution of 1 kHz. In addition, remote frequency programmability is standard. This feature makes the Model 3000 Signal Generator ideally suited for both semi and fully automatic test applications.

The accuracy of the instrument is based on a crystal-controlled oscillator that serves as a stable frequency source for the derivation of various reference frequencies. These reference frequencies are fed to phase locked loops that enable the Model 3000 to provide high stability signals to an accuracy of 0.001% over its specified 1 MHz to 520 MHz range.

In the CW and AM modes of operation the overall accuracy of the unit is 0.001% including short term drift, long term drift, incidental FM and variations due to line voltage changes and temperature changes. In the FM mode, the frequency is accurate to 0.001% ±10 kHz up to 5 kHz peak deviation and 0.001% ±45 kHz up to 500 kHz peak deviation.

1.1.2 Modulation Features

The Model 3000 also features both internal and external amplitude and frequency modulation capabilities. Internal modulation frequencies of 400 Hz and 1 kHz are available. In the FM mode of operation, peak deviations up to 500 kHz are attainable. In the AM mode amplitude modulation to 90% is attainable.

With the MODULATION MODE switch in either of the FM positions and the MODULATION FREQUENCY switch in the vernier position, the front panel slide control potentiometer can be used to continuously vary the output frequency over either a 5 kHz or 500 kHz range.

With the MODULATION MODE switch in the AM position and the MODULATION FREQUENCY switch in the vernier position the output amplitude can be varied via the same front panel slide control. This provides a reference attenuator for variation of a signal level around a specific point of interest. This operation can also enable the user to obtain greater than 20 milliwatts of power over portions of the band.

1.1.3 Output Level Features

The output power is indicated on a front panel meter calibrated in both dBm and Vrms. A fifteen-position, 10 dB step attenuator used in conjunction with an 11 dB vernier control provides the user with a range of +13 dBm to -137 dBm. The calibrated output of the Model 3000 is leveled to within ±0.75 dB across the complete frequency range of the instrument.

1.2 SPECIFICATIONS

1.2.1 Frequency

RANGE	1 MHz to 520 MHz selectable in 1 kHz steps.
READOUT	6 digit lever/indicator switches
RESOLUTION	1 kHz
ACCURACY	CW and AM modes ±0.001% after 15 min. (Typ ±0.0002% after 2 hours within 3 months of calibration) FMx1 mode ±(0.001% +10 kHz) FMx100 mode ±(0.001% +45 kHz)
STABILITY	CW and AM modes <0.2 ppm/hr. FMx1 mode 500 Hz/10 min.

1.2.2 RF Output Level

POWER LEVEL RANGE	+13 dBm to -137 dBm (1 V to .03 µV)
LEVEL CONTROL	Continuously adjustable in 10 dB steps and with an 11 dB vernier. Output level is indicated on a front panel meter calibrated in volts and dBm.
TOTAL LEVEL ACCURACY	+13 to -7 dBm: ±1.25 dB (Typ ±0.75 dB) -7 to -77 dBm: ±1.95 dB (Typ ±1.25 dB) < -77 dBm : ±2.75 dB (Typ ±1.5 dB)
ACCURACY BREAKDOWN	Flatness (+13 to -7 dBm): ±0.75 dB (Typ ±0.5 dB) Output Meter: ±0.5 dB Step Attenuator: ±0.5 dB to 70 dB (±0.2 dB calibration error) ±1.0 dB to 130 dB (±0.5 dB calibration error)

1.2.3 Output Characteristics

IMPEDANCE	50 ohms
SWR	<1.2 at RF output levels below 0.1 V

1.2.4 Spectral Purity

HARMONIC OUTPUT	>30 dB below fundamental from 10 to 520 MHz >26 dB below fundamental from 1 to 10 MHz
SUB-HARMONICS	None detectable

NON-HARMONICS

Fundamental (MHz)	Non-Harmonic (MHz)	Non-Harmonic level (dB below fundamental)
1 to 3	1 to 3	>60
3 to 250	3 to 250	>65
3 to 350	3 to 350	>55
3 to 520	3 to 1000	>35

RESIDUAL AM — >65 dB below carrier in a 50 Hz to 15 kHz post-detection bandwidth.

RESIDUAL FM — <200 Hz in 50 Hz to 15 kHz post-detection bandwidth. (Typ 100 Hz.) <100 Hz in 300 Hz to 3 kHz post-detection bandwidth. (Typ 50 Hz.)

1.2.5 Amplitude Modulation

NOTE: These specifications apply for a carrier level ≤+3 dBm. AM is possible above +3 dBm if the peak output does not exceed +13 dBm.

FREQUENCY
- Internal — 400 Hz and 1 kHz ±5%
- External — DC to 20 kHz, (3 dB bandwidth), input level required = 10 volts p-p into 600 ohm to provide calibrated % modulation control.

RANGE — 0 to 90%

DISTORTION — <3% distortion to 70% AM (<5% to 90% AM) at a frequency of 1 kHz (Typ <1.5% to 30% AM)

MODULATION CONTROL — Calibrated from 0 to 100%

ACCURACY — ±(5% of reading +5%) at a frequency of 1 kHz

1.2.6 Frequency Modulation

FREQUENCY
- Internal — 400 Hz and 1 kHz, ±5%
- External — DC to 25 kHz, (1 dB bandwidth), input level required = 10 volts p-p into 600 ohms to provide calibrated deviation control.

DEVIATION PEAK — Two bands, 0 to 5 kHz, and 0 to 500 kHz

DEVIATION CONTROL — Calibrated from 0 to 5 kHz, x1 and x100

ACCURACY — ±250 Hz on x1 range
±35 kHz on x100 range

DISTORTION — <4% (3 to 10 kHz deviation), <2% (10 to 500 kHz deviation) at a frequency of 1 kHz

1.2.7 Programmability

Frequency is programmable via rear panel input connector using BCD-coded TTL voltages or BCD-coded contact closures.

1.2.8 General

OPERATING TEMPERATURE	25 ±5°C, all specifications apply 25 ±15°C, with slight degradation of specifications
OUTPUT CONNECTOR	Type N
RFI	<1 μV is induced in a two-turn, one-inch diameter loop which is held one inch away from any surface. Loop feeds a 50 ohm receiver.
POWER	115/230 V ±10%, 50/60 Hz, 40 VA
DIMENSIONS	12 in. (30.3 cm) wide, 5¼ in. (13.4 cm) high, 13 3/4 in. (34.9 cm) long
WEIGHT	25 lb. (11.4 kg) net, 30 lb. (13.6 kg) shipping.

1.3 OPTIONS

Options 1A, 1B, 4, and 7 are factory installed. Option 3 may be factory or field installed.

1.3.1 RF Level Programming

For both Options 1A and 1B, the instruments are calibrated for +13 dBm at 50 MHz like a standard unit, but due to greater losses in Programmable Attenuators, a calibrated output is only guaranteed to +12 dBm.

Option 1A Program Level Range: 0 to 109.9 dB in .1 dB steps (programmed via rear-panel plug). 0 dB reference is +13 dBm. Front-panel level range: Continuously adjustable from +13 dBm to -97 dBm in 10 dB steps and an 11 dB VERNIER. Reverse power protection is also provided by this option.

Option 1B Program Level Range: 0 to 90 dB in 10 dB steps (programmed via rear-panel plug). 0 dB reference set by front-panel attenuators. Remote control of CW/AM mode is also provided.
Front-panel Level Range: See Section 1.2.2.
Reverse power protection is also provided by this option.

1.3.2 Reverse Power Protection

Option "3" prevents damage to the instrument if DC (100 V max) or RF (50 W max) voltages are accidentally applied to the RF output connector. (This option is not required when using option 1A or 1B).

1.3.3 Auxiliary RF Output

Option "4" provides a leveled (-10 dBm) signal available from a rear panel BNC connector. Normally used to drive a frequency counter.

1.3.4 Low Leakage

Option 7 reduces the leakage specification of Section 1.2.2 by a factor of 10.

1.4 ACCESSORIES

Furnished with instrument

Instruction Manual
Rear-panel PROGRAMMING plug and pins

Additional Accessories

Rack Mount Kit, K108
Programmers for single push-button or GPIB control of selected frequencies and output levels, Series 3900.
Module Service Kit, K004

SECTION 2
OPERATION

2.1 INTRODUCTION

This section provides complete installation and operating instructions for the Wavetek Model 3000 signal generator. The instructions consist of mechanical installation, electrical installation, front and rear panel features, installation checks and operating procedures.

2.2 MECHANICAL INSTALLATION

2.2.1 Initial Inspection

After unpacking the instrument, visually inspect the external parts for damage to knobs, connectors, surface areas, etc. The shipping container and packing material should be saved in case it is necessary to reship the unit.

2.2.2 Damage Claims

If the instrument is received mechanically damaged in transit, notify the carrier and either the nearest Wavetek area representative or the factory in Indiana.

Retain the shipping carton and packing material for the carrier's inspection.

The local representative, or the factory will immediately arrange for either the replacement or repair of your instrument, without waiting for damage claim settlements.

2.2.3 Rack Mounting (K108)

CONTENTS

Item	Qty	Part No.
A (Insert)	2 ea	B001-145
B (Side)	2 ea	C001-146
C (Screw)	8 ea	HS101-808
D (Screw)	4 ea	HS101-810

Procedure: (See Figure 2-1)

Remove the screws from one side panel. Mount items A and B against the side panel of the instrument and secure with the screws provided. (Screws D are longer than screws C.) Repeat the operation for the other side of the unit.

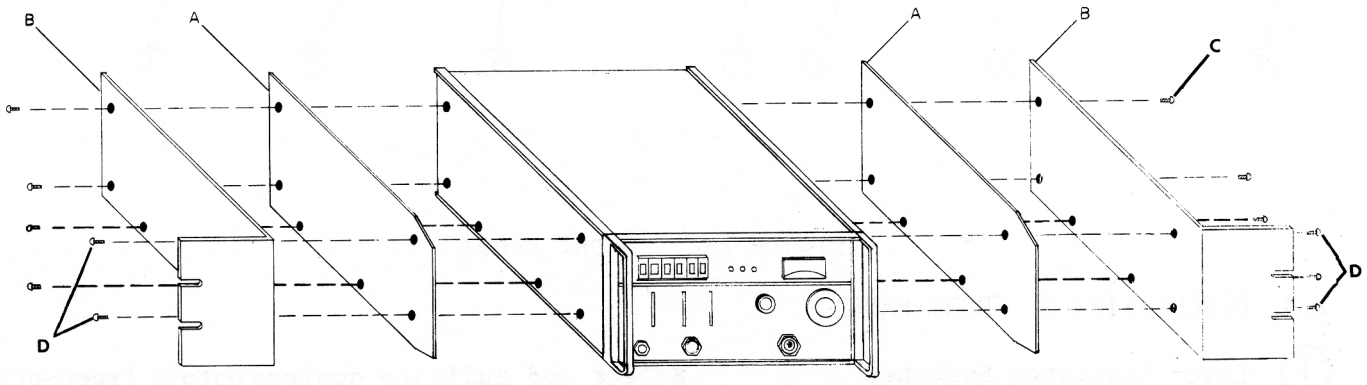

Figure 2-1. K108 Rack Mount

2.3 ELECTRICAL INSTALLATION

The instrument operates from either 115 volt AC or 230 volt AC supply mains as selected by a Slide Switch located on the rear panel. Before operating the instrument, check that the fuse mounted in the Rear Panel Fuse Holder corresponds to the correct value for the selected voltage, i.e., 1.0 amp for a 115 volt AC and 0.5 amp for 230 volt AC.

The power supply has been designed to operate from either 50 or 60 Hz supply mains.

Instruments are shipped from the factory for operation at 115 volt AC 60 Hz unless specified for 230 volt AC or 50 Hz operation.

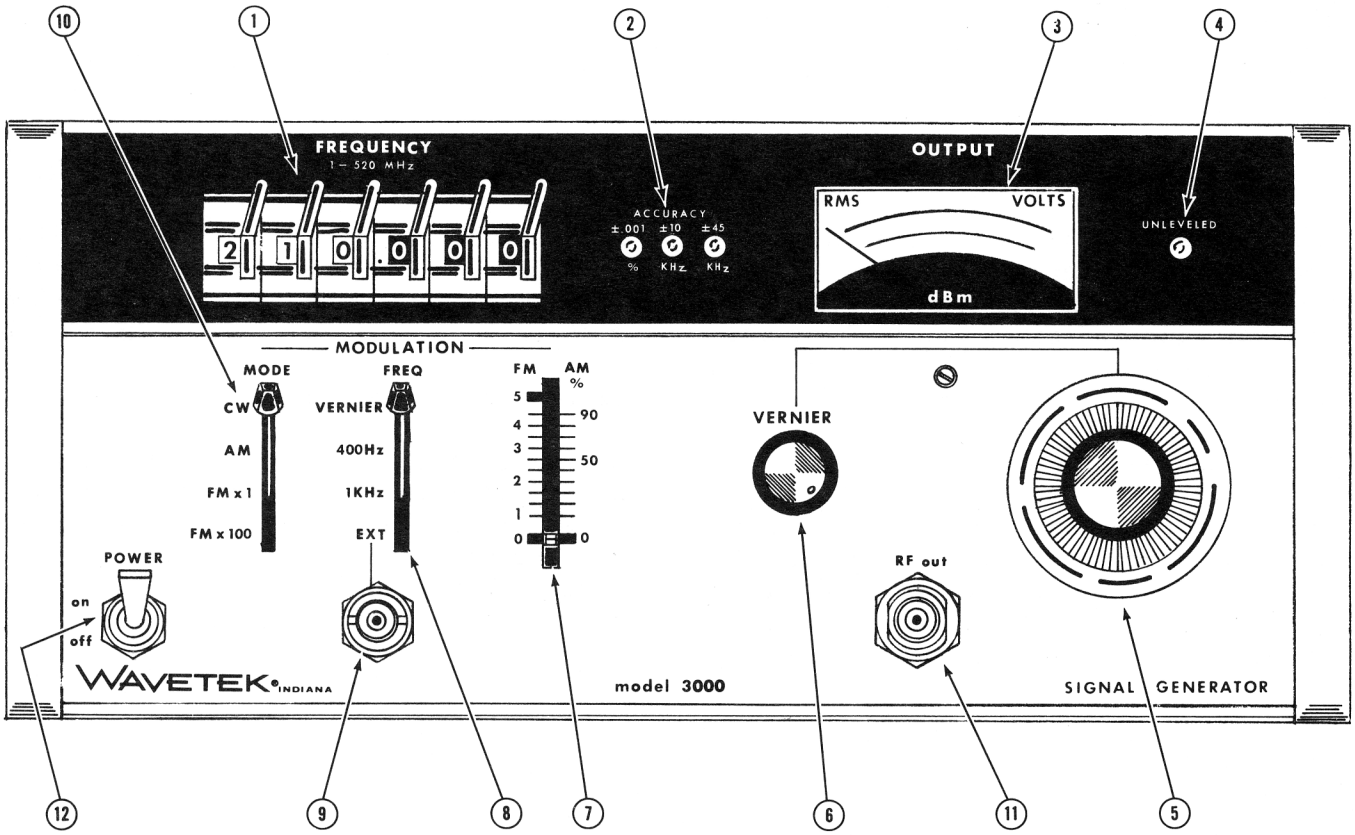

Figure 2-2. Front Panel

2.4 DESCRIPTION OF FRONT PANEL

(1) Lever Indicator Switches — Select and indicate desired output frequency from 1 to 520 MHz with a 1 kHz resolution.

(2) Accuracy Lamps

Indicate frequency accuracy. ±0.001% in CW and AM modes, ±(0.001% + 10 kHz) in FMx1 and ±(0.001% + 45 kHz) in FMx100. Typically the lamp will flash for a few seconds after power is turned on. Under normal operation a steady light indicates that the unit is phase-locked and the frequency accuracy indication is valid. A continuously flashing light indicates that one or more of the phase lock loops is open. (The open loop can be identified by removing the top cover and looking for the corresponding "module fault" light.)

(3) Output Level Meter

Indicates output level over a 10 dB range in VRMS and dBm.

(4) Unlevel Lamp

Indicates that the output level accuracy is not valid when the lamp is on.

(5) Attenuator

Controls the output level over a 140 dB range from +10 to -130 dBm. The Attenuator dial is calibrated in dB and VRMS.

(6) Vernier

Controls the output level over an 11 dB range.

(7) AM/FM Vernier

Is calibrated from 0 to 5 kHz FM peak deviation and from 0 to 90% AM. This control permits precise AM and FM settings with the mode switch in AM and FMx1 or FMx100 respectively and the frequency switch in 400 Hz, 1 kHz or Ext. The vernier also serves as a manual amplitude and frequency control with the frequency switch in vernier. The vernier provides up to +6 dB amplitude change when the mode switch is in the AM and also provides up to a +5 kHz or up to +500 kHz frequency change when the mode switch is in FMx1 and FMx100 respectively.

(8) Frequency Switch

Selects vernier, for manual amplitude or frequency control, 400 Hz and 1 kHz internal modulation and external modulation.

(9) Ext

Modulation input accepts a DC to 20 kHz signal for AM and a DC to 25 kHz for FM. A 10 V peak-to-peak signal into a 600 ohm impedance calibrates the AM/FM vernier full scale. A lesser input voltage will result in a proportional full scale calibration of the AM/FM vernier. Therefore, a 1 volt peak-to-peak signal into 600 ohms will result in a

(9) Ext continued	full scale calibration of 500 Hz peak deviation in FMx1, a 50 kHz peak deviation in FMx100 or 10% amplitude modulation in AM.
(10) Mode Switch	Selects CW, AM, FMx1 or FMx100 operation.
(11) RF out	Type N connector provides a connection for the RF output signal.
(12) Power Switch	Provides AC power to the power supply.

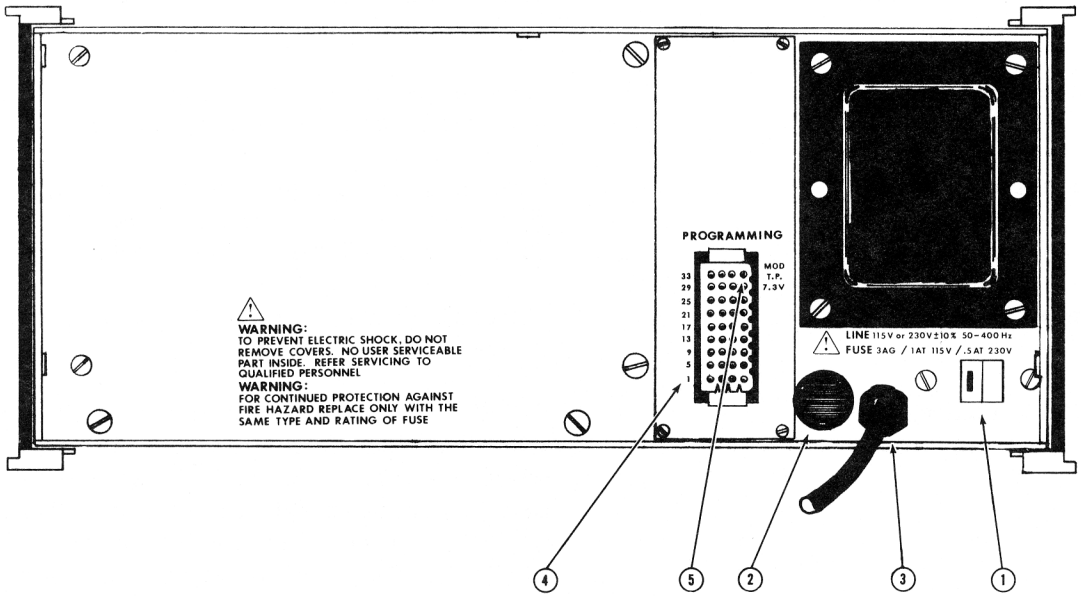

Figure 2-3. Rear Panel

2.5 DESCRIPTION OF REAR PANEL

(1) Switch 115/230 V	Selects either 115 volt AC or 230 volt AC supply mains. Before operating the instrument check that the fuse mounted in the Rear Panel Fuse Holder corresponds to the correct value for the selected voltage.
(2) AC Line Fuse	1.0 amp for 115 volt AC or 0.5 amp for 230 volt AC.
(3) Input 50/60 Hz	3 prong AC plug provides connection to AC mains.

(4) Programming	Provides connection for programming of frequency.
(5) Modulation Test Point	Monitors internal or external AM or FM modulation.

2.6 INSTALLATION CHECKS

The following procedure is used to determine that the instrument is operating properly. Performance testing and calibration of the instrument are contained in other sections of this manual. If it is determined that the unit is not operating properly or is not meeting specifications, refer to the warranty on the back of the title page.

2.6.1 Turn On

Verify that the power transformer primary is matched to the line voltage available, and that the proper fuse is installed. (See Section 2.3 Electrical Installation) Turn the front panel power switch to the "ON" position. One or more of the front panel accuracy lights will be illuminated indicating an operating condition. No warmup is needed for the following checks.

2.6.2 Control Adjustment

Set the Model 3000 front panel controls as follows:

Output Frequency	10 MHz (Lever indicator switches to 010.000).
Mode Switch	CW
Frequency Switch	1 kHz
AM/FM Vernier	0 (Down Position)
Vernier	Full CW
Attenuator	0 dBm

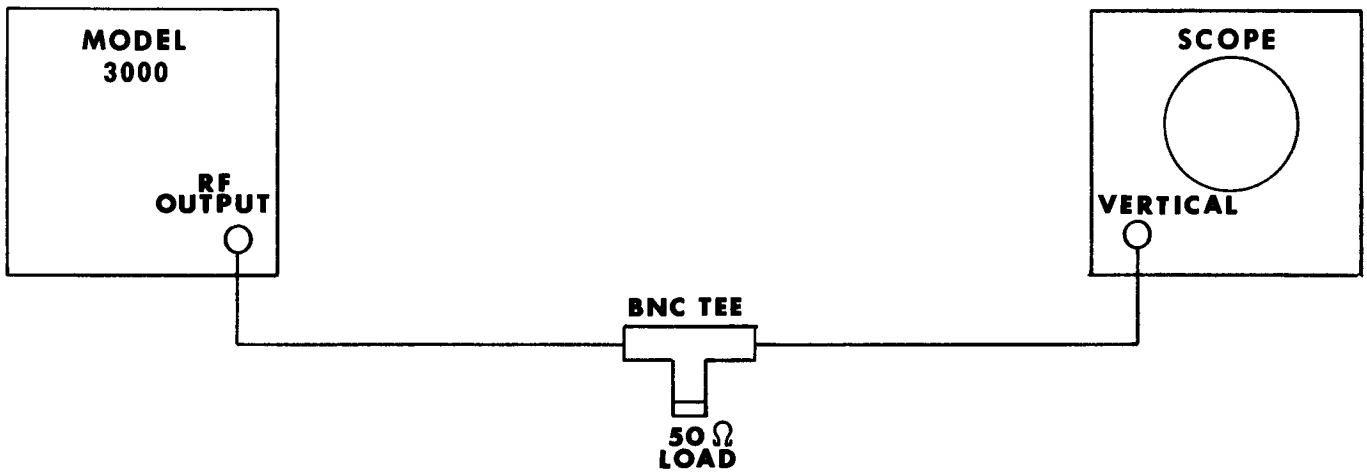

NOTE: MUST BE HIGH FREQUENCY OSCILLOSCOPE (GREATER THAN 10 MHz)

Figure 2-4. Test Setup

2.6.3 RF Output Check

Connect the equipment as shown in Figure 2-4. The 10 MHz signal must be at least 0.9 V p-p (a high frequency oscilloscope must be used for these checks).

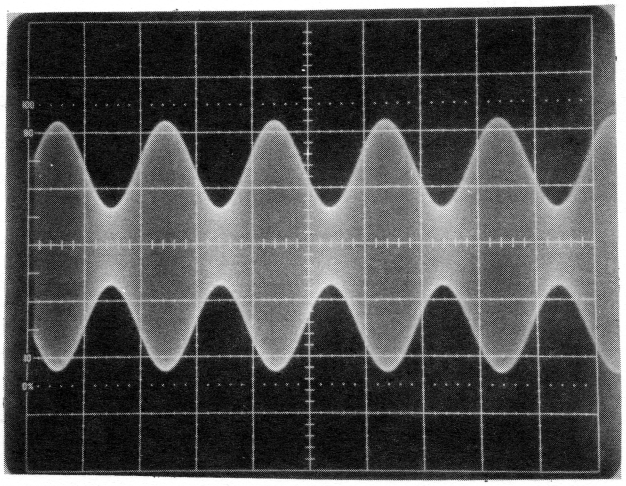

Figure 2-5. AM Modulation

2.6.4 AM Modulation Check (1000 Hz)

Switch the mode switch to AM. Move the AM/FM vernier up to the 50% modulation point. Verify that the AM envelope displayed on the oscilloscope shows a peak-to-valley voltage difference of about .45 V and a period of 1 ms. (See Figure 2-5).

2.6.5 AM Modulation Check (400 Hz)

Move the frequency switch to the 400 Hz position. Verify the AM envelope period is 2.5 ms.

2.6.6 FMx1 Check

Switch the mode switch to FMx1. Move the AM/FM Vernier up and down. Verify that the oscilloscope shows an FM display (See Figure 2-6).

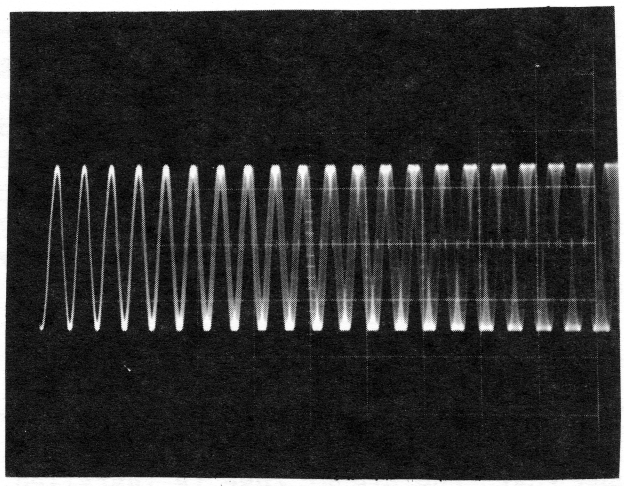

Figure 2-6. FM Modulation

2.6.7 FMx100 Check

Switch the mode switch to FMx100 and repeat the above check.

2.6.8 Frequency Vernier Check

Leaving the mode switch in the FMx100 position place the frequency switch in the Vernier position. Verify that moving the AM/FM Vernier from 0 to 5 kHz shows an increase in frequency on the oscilloscope.

2.6.9 Vernier Output Check

Switch the mode switch to the AM position. Verify that moving the AM/FM Vernier from 0 to 50 shows an increase in output amplitude. (NOTE: The unlevel light may come on during this test.)

2.6.10 Attenuation Check

Switch the mode switch to CW. Verify that the output vernier and attenuator controls change the amplitude of the

signal displayed on the oscilloscope. The instrument is now ready for use.

2.7 OPERATING PROCEDURE

No preparation for operation is required beyond completion of the initial installation checks contained in Section 2.6. To insure that the Model 3000 will perform as stated in the specifications, the instrument should have a two hour warmup before using.

2.7.1 Turn On

Verify that the power transformer primary is matched to the line voltage available and that the proper fuse is installed (See Section 2.3 Electrical Installation. Turn the front panel switch "ON". One or more front panel accuracy lights will be illuminated indicating an operating condition. NOTE: A flashing indication on the lights indicates an unlocked condition. This should cease in a matter of seconds. If the flashing does not cease, refer to the warranty on the back of the title page. If the unit is not going to be used to the extreme limits of its specifications, it can be used immediately, otherwise a two hour warmup is required.

NOTE: When working with active circuits, transceivers, etc., care should be used to keep voltage or RF power from being applied to the RF output connector. Damage may occur to the output attenuator circuitry of the Model 3000 if this happens.

2.7.2 Frequency Selection

Select the frequency desired with the six Lever Indicator switches on the front panel. A frequency between 1 and 520 MHz can be selected with a 1 kHz resolution.

2.7.3 Output Level Selection

Set the output attenuator and vernier to the desired level. The output is continuously adjustable over a +13 to -137 dBm range. The level shown on the attenuator added to the meter indication equals the RF output. NOTE: AM modulation is possible at levels above +3 dBm as long as the peak of the modulated output does not exceed the +13 dBm maximum output level. If this level is exceeded the unlevel light will illuminate indicating an unleveled condition.

2.7.4 AM Modulation - Internal

Set the mode switch to AM and the frequency switch to either 400 or 1000 Hz modulation rate. Adjust the AM/FM vernier to indicate the desired modulation depth.

2.7.5 AM Modulation - External

CAUTION: Input voltages greater than ±10 VDC or 10 VRMS should not be applied to the external modulation input connector or damage may occur to internal circuitry of the Model 3000.

Set the mode switch to AM and the frequency switch to external. Apply a 10 V p-p signal into 600 ohms to the External modulation input connector. This calibrates the AM/FM Vernier control. The desired modulation depth can then be set. The upper frequency limit of this input is 20 kHz.

NOTE: When AM modulating, care must be taken not to exceed the +13 dBm maximum level or excessive distortion and an unlevel condition can exist. In some cases, a high % of AM modulation may cause the unlevel light to come on when the RF vernier control is at minimum. This is caused by the bottoming of the PIN diode leveler which in turn can cause an increase in distortion. If

this is the case, add 10 dB of fixed attenuation and turn the RF vernier control toward maximum. The unlevel light should then go out.

2.7.6 FM Modulation - Internal

Set the mode switch to FMx1 or FMx100 and the frequency to 400 or 1000 Hz. Adjust the AM/FM vernier to the desired peak deviation.

2.7.7 FM Modulation - External

CAUTION: Input voltages greater than ±10 VDC or 10 VRMS should not be applied to the external modulation input connector or damage may occur to internal circuitry of the Model 3000.

Set the mode switch to FMx1 or FMx100 and the frequency switch to external. Apply a 10 V p-p signal into 600 ohms to the external modulation input connector. This calibrates the AM/FM vernier control. The desired peak deviation can be set. For FM modulation the upper frequency limit is 25 kHz.

2.7.8 Vernier Control FM Position

Switch the mode switch to the FMx1 or FMx100 position and the frequency switch to Vernier. Using the AM/FM vernier output control, frequency can be varied in a positive direction up to 5 kHz in the x1 position or 500 kHz in the x100 position.

2.7.9 Vernier Control - AM Position

Switch the mode switch to the AM position and the frequency switch to Vernier. Using the AM/FM vernier control the output amplitude can be varied. It also enables more than 20 mW of power to be obtained over portions of the band.

2.7.10 Programming

Frequency is programmable via a rear panel input connector set by standard 8-4-2-1 BCD contact closures. A mating connector is supplied with each unit. See Figure 2-7 for pin location and identification. These connections are in parallel with the front panel Lever Indicator switches. If the rear panel programming is used, the front panel switches should indicate all zeros. Rear panel BCD programming can be implemented by referring to Table 2-1.

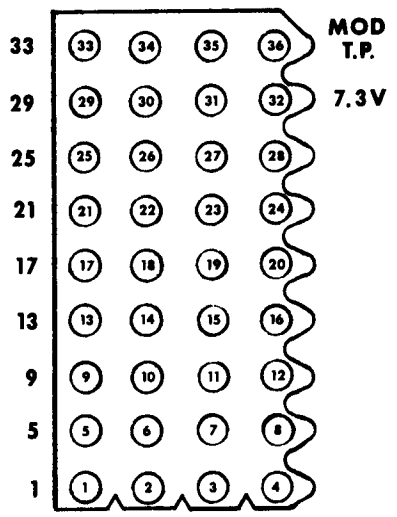

PIN	CONNECTION	
1	N.C.	
2	400	100's
3	200	
4	100	
5	80	
6	40	10's
7	20	
8	10	
9	8	
10	4	1's
11	2	
12	1	
13	.8	
14	.4	.1's
15	.2	
16	.1	
17	.08	
18	.04	.01's
19	.02	
20	.01	
21	.008	
22	.004	.001's
23	.002	
24	.001	
25	ground	
26 - 31	N.C.	
32	7.3V	
33 - 35	N.C.	
36	MOD. T.P.	

Figure 2-7. Pin Location & Identification

TABLE 2-1. PROGRAMMING

	Switch	TTL
Logic "0"	Open	≥2.2V
Logic "1"	Ground	≤0.4V

SECTION 3
THEORY OF OPERATION

3.1 INTRODUCTION

Section 3.2 presents a block diagram analysis to enable the reader to get a brief overall view of the operation of the instrument. Sections 3.3 - 3.15 contain more detailed descriptions of each subassembly.

For actual wiring of the chassis and subassemblies, refer to the schematics in Section 7 of the manual.

3.2 OVERALL BLOCK DIAGRAM

The Model 3000 is essentially a voltage controlled oscillator to which phase-locked loops and a crystal reference have been added for the high frequency resolution.

The discussion will first deal with the basic signal generator then it will describe how the phase-locked loops provide the additional accuracy.

3.2.1 Basic Signal Generator

This discussion briefly describes how the RF is generated and how its frequency is controlled, also how the signal is amplified, leveled and amplitude modulated.

Refer to Figure 3-1 for a block diagram of the basic signal generator without phase locking.

RF GENERATION

The RF output frequency is generated by two UHF oscillators and a mixer. The outputs of the two oscillators are heterodyned in the mixer. The difference frequency is amplified and fed to the output amplifier.

The frequencies of these oscillators are controlled by DC voltages applied to their varactor diodes. The Narrow Oscillator yields a single frequency. The Wide Oscillator can be programmed over a range from the frequency of the Narrow Oscillator to 520 MHz above the Narrow frequency.

RF FREQUENCY CONTROL

The RF output frequency is determined by programming the frequency of the Wide Oscillator. The Wide Oscillator is ultimately controlled by the front panel FREQUENCY switches. The BCD output of these switches is converted to an analog voltage which programs the oscillator in 1 MHz steps. This analog signal can provide approximately 3 MHz accuracy.

RF AMPLIFICATION AND LEVELING

The RF power is amplified by a multi-stage, wide-band amplifier. The flat output is maintained by a closed-loop leveling system around this Output Amplifier.

The Leveler includes a Monitor Diode, an Error Amplifier and a Voltage Variable Attenuator. The Monitor detects the peak of the output of the Output Amp. This detected level is compared to a DC reference by the Error Amp. The output of the Error Amp is fed to a PIN diode (voltage variable) attenuator, which changes the input level to the Output Amp until the monitored signal produces a DC level equal to the reference level.

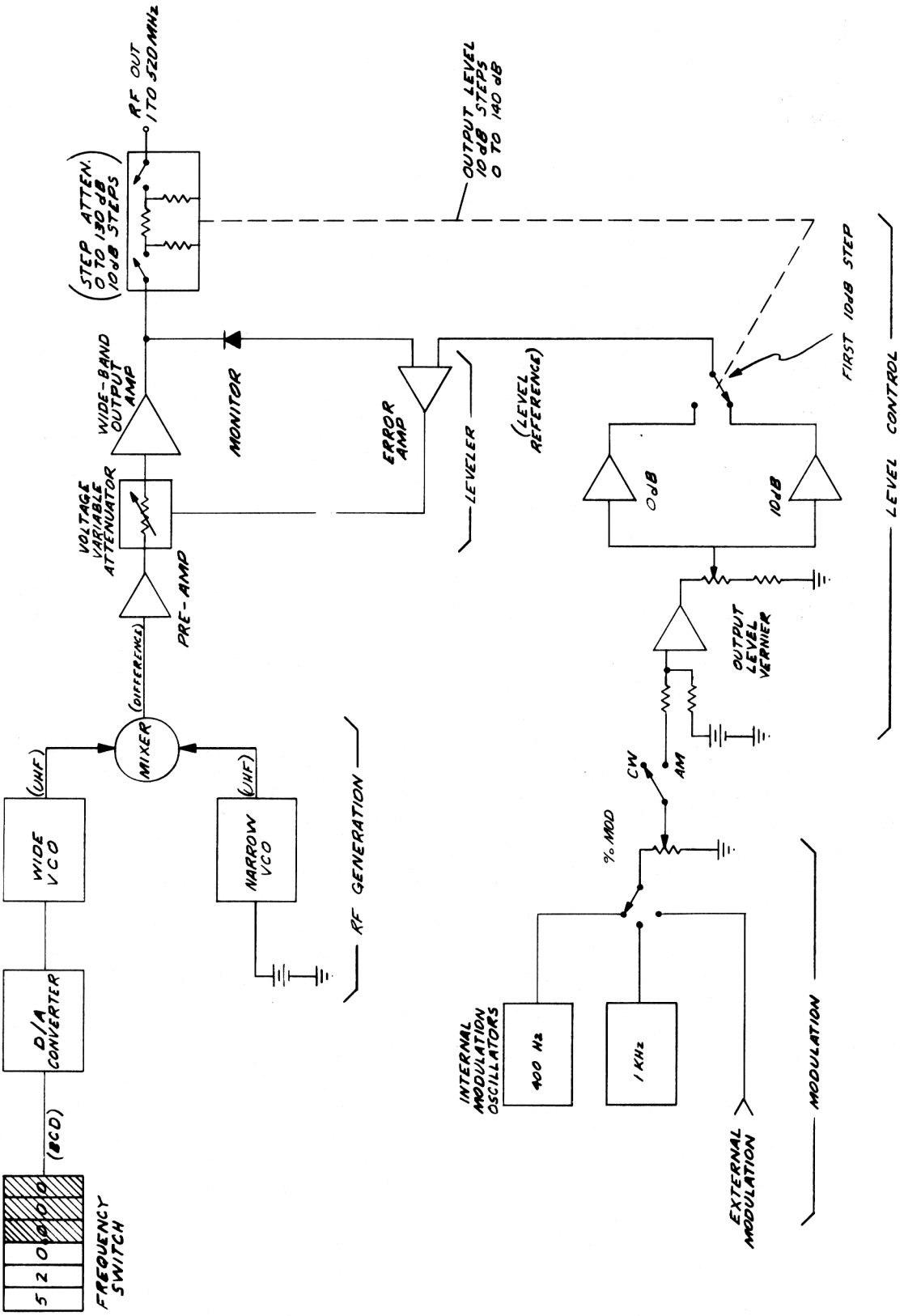

Figure 3-1. Basic Signal Generator

LEVEL CONTROL AND AM

The circuitry for controlling the RF output level is directly related to the above leveling system because changing the DC level reference changes the RF output level.

Of the 150 dB output range, 130 dB is passive attenuation. The remaining 20 dB is controlled by changing the level reference. The VERNIER output control has a 10 dB range. The remaining 10 dB is provided by switching the level reference range. This range switch is provided so that when AM is not required the output amp can provide a carrier at the highest possible power.

Since the RF level can be voltage controlled, AM can be accomplished by applying the modulating signal to the VERNIER level control. This causes the reference voltage to the Error Amp to change at the frequency of the modulating signal. The modulating signal is from one of two internal oscillators or from an external source.

3.2.2 Phase-Locked Loops

The basic signal generator discussed in Section 3.2.1 has a frequency range of 1 to 520 MHz, has an output which is leveled and adjustable and has the ability to be amplitude modulated. With the above circuitry, however, the accuracy is only 3 MHz with 1 MHz resolution. To achieve the desired 1 kHz resolution and .001% accuracy, the instrument includes four phase-locked loops.

Phase-locked loops (PLL) #1, #2 and #4 are used to stabilize the Wide Oscillator and tune it in 1 kHz steps. See Figure 3-1. The Narrow Oscillator is included in PLL #3 which provides stabilization and allows FM operation.

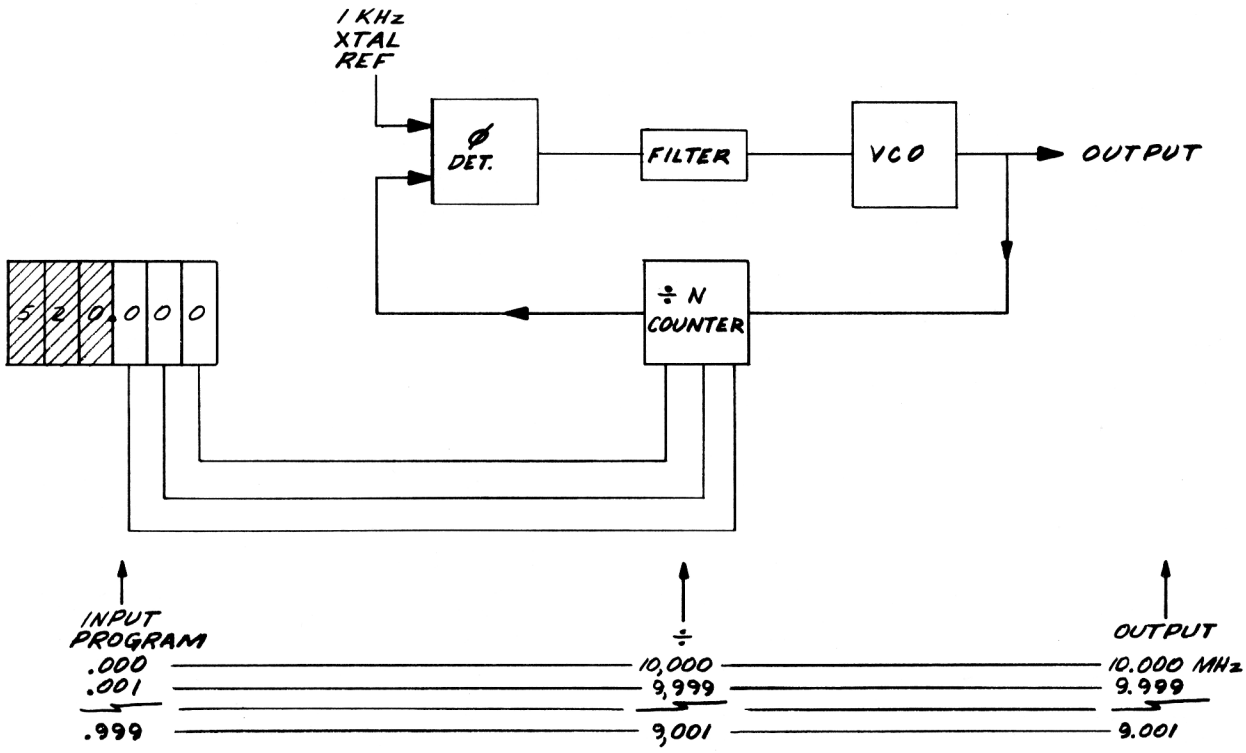

Figure 3-2. PLL #1

PLL #1

The purpose of PLL #1 is to generate a CW signal which changes in 1 kHz steps from 10.000 to 9.001 MHz as the front panel frequency selector is switched from .000 MHz to .999 MHz. This signal will be used as a reference signal for PLL #4.

Figure 3-2 shows a simplified block diagram of PLL #1. It consists of a voltage controlled oscillator capable of frequencies from 9 to 10 MHz, a phase detector and a ÷N counter. A sample of the output signal from the VCO is fed to a programmable counter. The divisor of the counter is controlled by the three front panel kHz selector switches. The output from the counter is fed to a phase detector where it is compared to a 1 kHz crystal reference signal. If the two input signals to the phase detector are not the same frequency, an error signal is produced. This error voltage corrects the frequency of the VCO until the phase detector input from the counter is exactly 1 kHz.

PLL #2

The purpose of PLL #2 is to generate a CW signal which changes in 1 MHz steps from 1448 to 1487 MHz when the front panel frequency selector is switched from 000. to 039. MHz. These CW steps are then repeated every 40 MHz throughout the entire 0 to 520 MHz range. Use of this signal to control the Wide Oscillator will be discussed in the description of PLL #4.

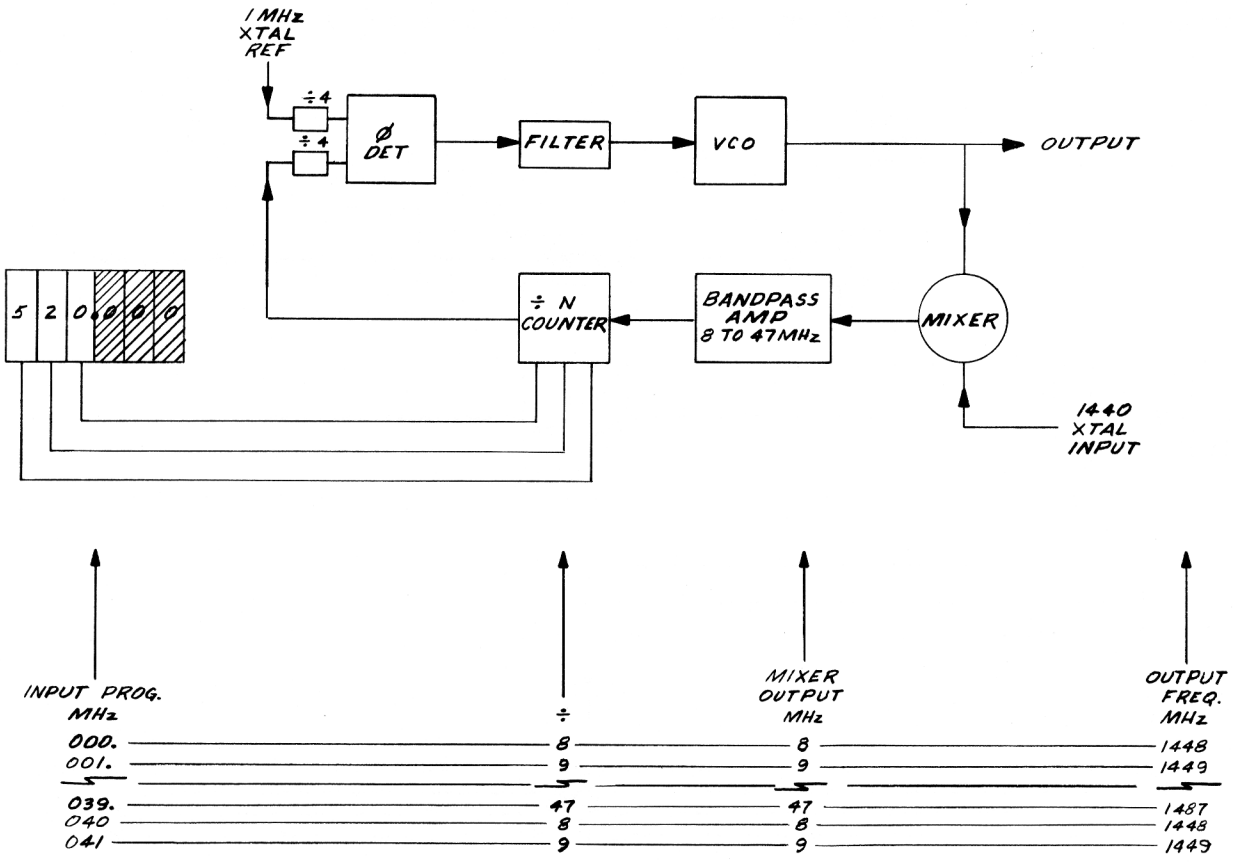

Figure 3-3. PLL #2

Figure 3-3 shows a simplified block diagram of PLL #2. PLL #2 operates in the same manner as PLL #1 with one exception. The circuit includes a mixer and band-pass amplifier. The purpose of this additional circuit is to offset the 1448 to 1487 MHz output from the VCO to 8 to 47 MHz. This offset is necessary in order to make the frequency compatible with the programmable counter and phase detector circuits. The other circuits in this loop operate the same as those in PLL #1. In this case the programmable counter is controlled by the three "MHz" selector switches and the loop reference frequency is 1 MHz.

PLL #4

The purpose of PLL #4 is to adjust the Wide Oscillator in 1 kHz steps from 1198 MHz to 1718 MHz as the front panel frequency selector is adjusted from 0 to 520.000.

The Wide Oscillator frequency is offset by Mixers #1 and #2 and compared to the reference (from PLL #1) by the phase detector. A difference in phase or frequency causes an error signal to tune the Wide Oscillator until both phase detector inputs are identical. How this loop locks on a particular frequency can best be explained in three steps: 1) phase locking at 40 MHz intervals across the band, 2) phase locking at 1 MHz intervals, 3) phase locking at 1 kHz intervals. Figure 3-4 is a simplified block diagram of PLL #4.

To understand locking at 40 MHz intervals, assume temporarily that the reference frequencies from PLL #1 and PLL #2 are fixed (10 MHz and 1448 MHz respectively). Figure 3-5 shows the frequencies throughout the loop for this discussion. This step of the PLL #4 explanation can be described more clearly by considering the entire Wide Oscillator range rather than discussing single frequencies. The Wide Oscillator covers the range of 1198 to 1718 MHz as the Output frequency changes from 0 to 520 MHz. (Figure 3-5, lines A and C.)

When the Wide Oscillator range is heterodyned in Mixer #1 with 1448 MHz the difference frequency which is produced ranges from 250 to 0 to 270 MHz. (Figure 3-5, line E.) This signal is then mixed with a 40 MHz comb (all harmonics of 40 MHz) in Mixer #2. (Figure 3-5, line F.) Taking the difference between line E and F yields the repetitive frequency range from 0 to 20 to 0 MHz as shown in line G. This signal is fed to the phase detector.

The reference to the phase detector is 10 MHz but the loop will not lock on every 10 MHz output of Mixer #2 shown on line G. Only the 10 MHz signals to the immediate right of the 20 MHz signals on the graph are the proper phase to produce lock. Therefore at every 40 MHz interval of the output frequency an input to the phase detector would allow the loop to lock. Section 3.2.1 explains that an analog signal drives the Wide Oscillator to within three MHz of the proper frequency. Therefore, although there are 14 possible lock points on line G, the only one selected will correspond to the analog-tuned frequency of the Wide Oscillator. The unit as described so far is capable of phase locked output at 0, 40, 80. . . 520 MHz. The following is an explanation of locking at 1 MHz intervals.

To allow phase locking at 1 MHz intervals, the reference frequency to Mixer #1 is made adjustable in 1 MHz steps over a 40 MHz range (1448-1487 MHz).

If, for example, this reference frequency to Mixer #1 were 1449 MHz, the input range to the phase detector would look the same except the entire range would be shifted 1 MHz to the right. Lock points would then be possible at output frequencies of 1, 41, 81 MHz, etc.

Being able to change this reference in 1 MHz steps allows phase locking from 0 to 520 MHz in 1 MHz steps.

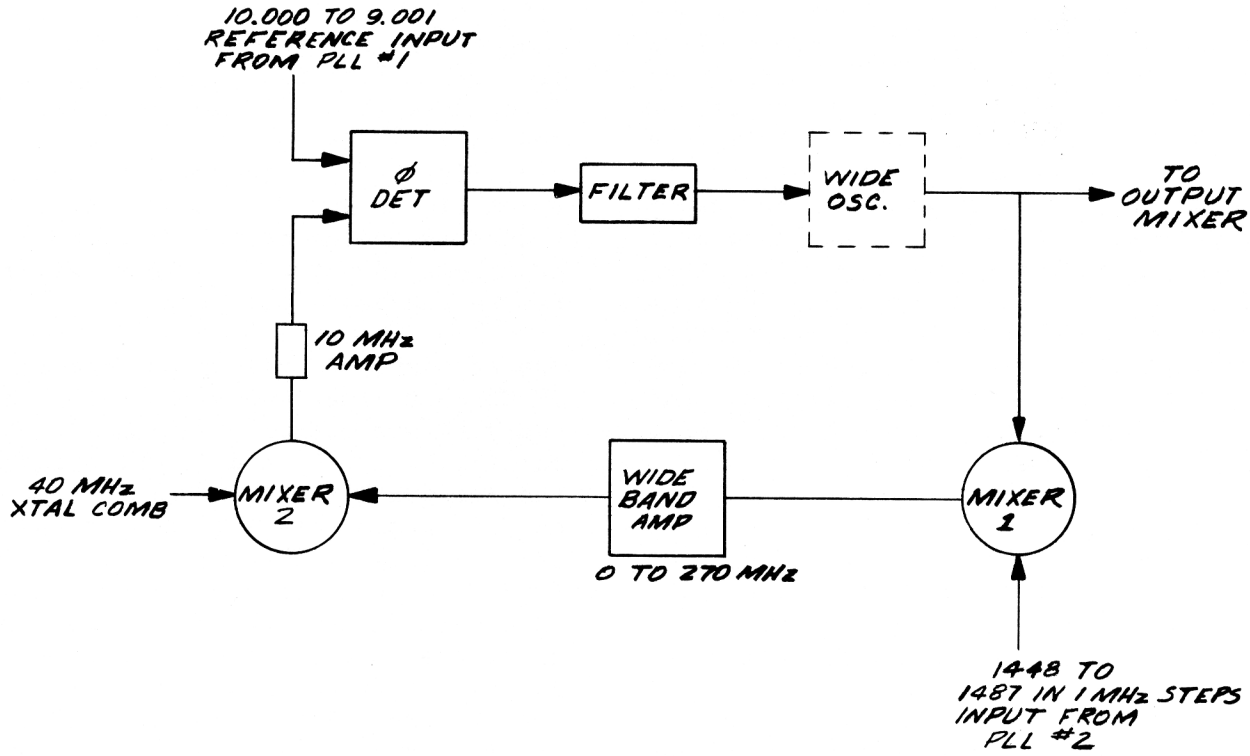

Figure 3-4. PLL #4

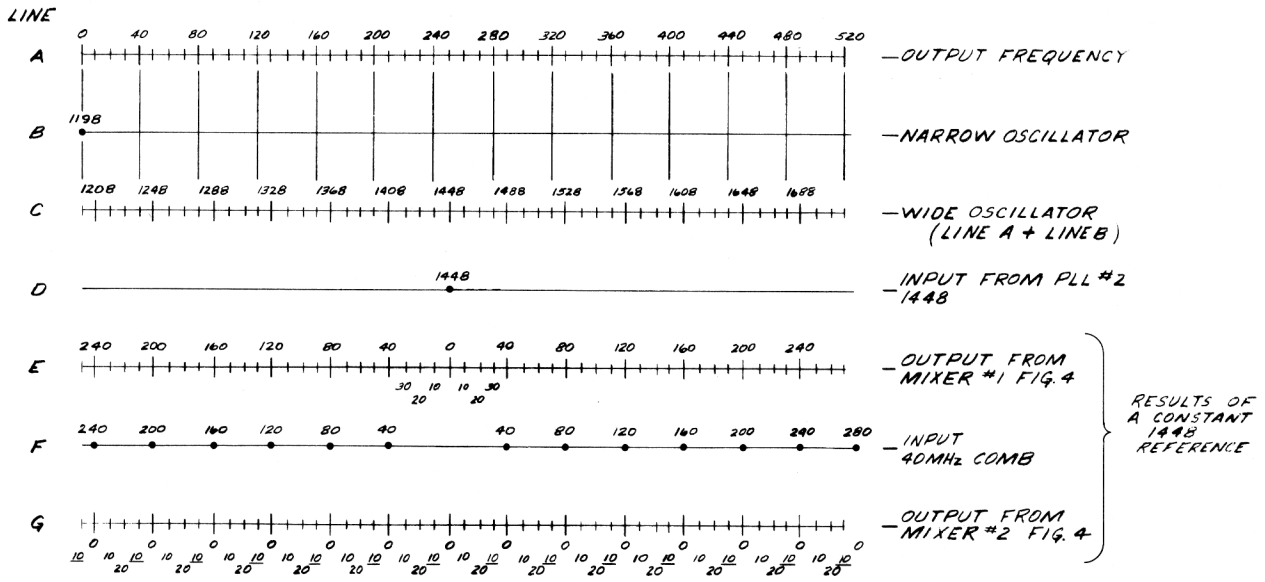

Figure 3-5. PLL #4 Frequencies

To provide phase locking in 1 kHz steps, the PLL #4 phase detector's reference from PLL #1 is adjustable in 1 kHz steps (10.000 to 9.001 MHz). This causes the Wide Oscillator frequency to change in 1 kHz steps in order to keep the loop locked.

PLL #3

The purpose of PLL #3 is to stabilize the Narrow Oscillator at a frequency of 1198 MHz.

Figure 3-6 shows a simplified block diagram of PLL #3. This loop operates in the same manner as PLL #1 and PLL #2 except that it does not require the use of a programmable counter. The 1198 MHz output from the Narrow Oscillator is combined in a mixer with a 1200 MHz crystal controlled signal. This produces a 2 MHz difference signal. This signal is fed to a phase detector where it is compared to a 2 MHz crystal reference. Any difference in the input signals will produce an error voltage which is applied to the Narrow Oscillator (VCO) to correct the frequency error.

To provide FM modulation, the 2 MHz crystal reference applied to the phase-detector in PLL #3 is replaced with the output of a VCO as shown in Figure 3-7.

With a 0 volt (0 deviation) input to the VCO of Figure 3-7, the output is 2 MHz, therefore the operation of the generator is unchanged except the frequency accuracy is reduced because the reference is not now crystal controlled. A modulating signal of +5 V to -5 V will cause the VCO frequency to shift 0.5 MHz above and below the 2 MHz signal. Since the instrument's RF output signal is phase locked to this reference the output of the generator will be FM modulated with a maximum deviation of .5 MHz.

CRYSTAL REFERENCE

All the reference frequencies for the phase-locked loops are derived from a single 40 MHz crystal source by means of appropriate multiplication or division.

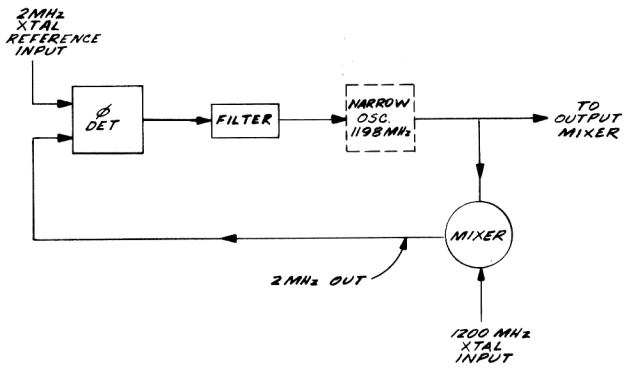

Figure 3-6. PLL #3

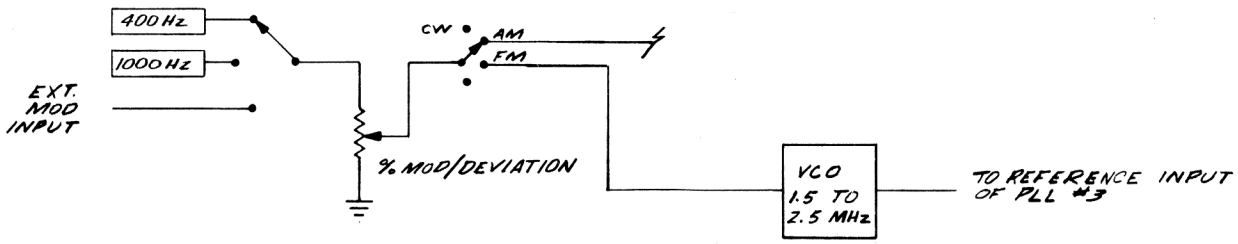

Figure 3-7. FM Circuit

3.2.3 Subassembly Descriptions

The overall block diagram discussed in this section describes basically how the instrument functions as a unit. The unit is made up of ten module assemblies and three printed circuit card assemblies. These can be identified in Figure 5-6. Sections 3.3 thru 3.15 describe the operation of each subassembly. The name of the subassembly describes, to an extent, the primary function it performs.

3.3 C315 - METER BOARD

The primary function of this assembly is to provide the program voltage to the leveler circuit for the RF amplifier. It also includes the RF output level meter which appears through the instrument front panel. See Figure 3-8.

3.3.1 Level Program

During CW operation of the instrument, the level program is controlled by the VERNIER on the front panel. The output of this control goes to two range calibration circuits, "High" and "Low". The range calibration circuits convert the voltage from the VERNIER to a voltage level appropriate to drive the leveler circuit in the M10W.

The "Low" circuit provides the program for all ranges of the detented power output dial except +10 dBm. At "+10" the level program is taken from the "High" circuit. The "High" level program enables the full gain capabilities of the M10W to be used when the output is not amplitude modulated.

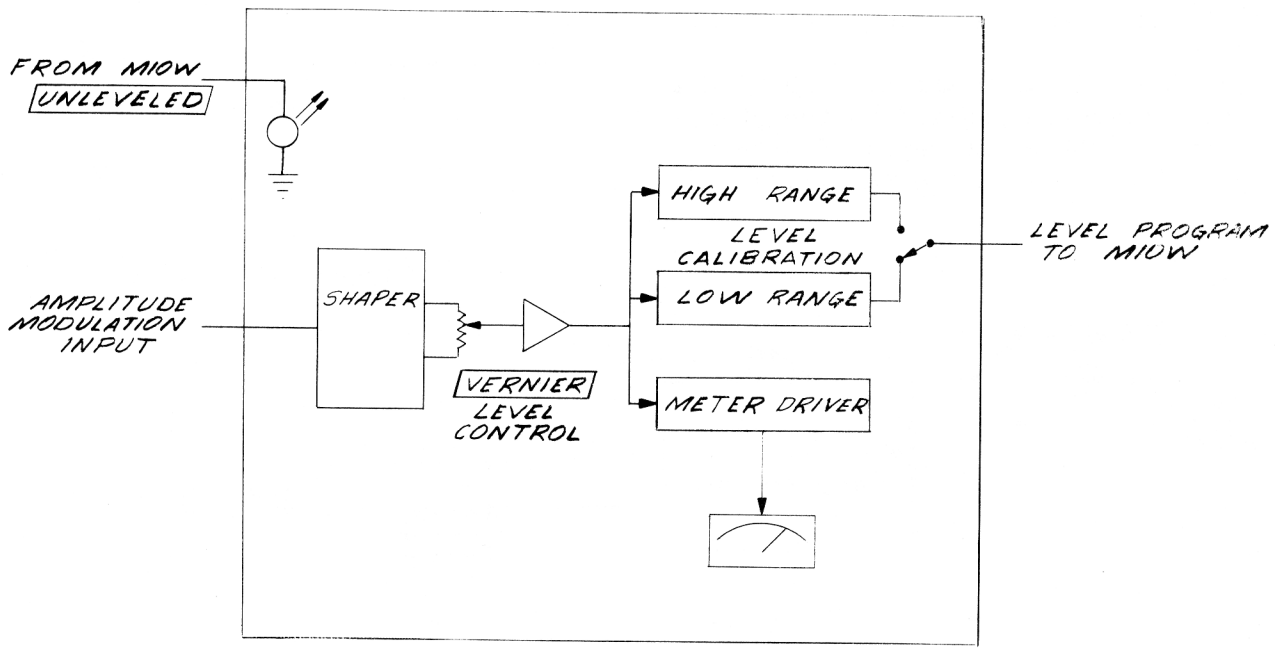

Figure 3-8. C315 - Meter Board

3.3.2 Modulation

The modulating signal from assembly C316 is applied to the VERNIER which ultimately causes the RF level to change. The leveler in the M10W does not cause the RF level to respond linearly to changes in the level program voltage. To compensate for this, a stage is included to shape the modulation signal before it is applied to the VERNIER.

3.3.3 Meter

The output level meter (front panel) is controlled by the level program from the VERNIER. The meter and its driver circuit are designed to display a reading which corresponds to the actual RF level from the M10W.

3.3.4 "Unleveled" Light

A light emitting diode is mounted on this assembly and appears on the front panel of the instrument. Refer to the M10W description for an explanation of the circuit driving this light.

3.4 C316 - MODULATION BOARD

This assembly provides the modulating signals used in the AM and FM modes. The front panel ACCURACY lights and associated circuitry are also on this assembly. See Figure 3-9.

3.4.1 Modulating Signals

The AM or FM modes are achieved by simply routing essentially the same signal to the appropriate circuitry by means of the front panel MODE switch.

The front panel MODULATION FREQ switch selects one of four sources of modulating frequency, one external and three internal. The internal signal can be selected from one of two CW oscillators or a manually variable DC control.

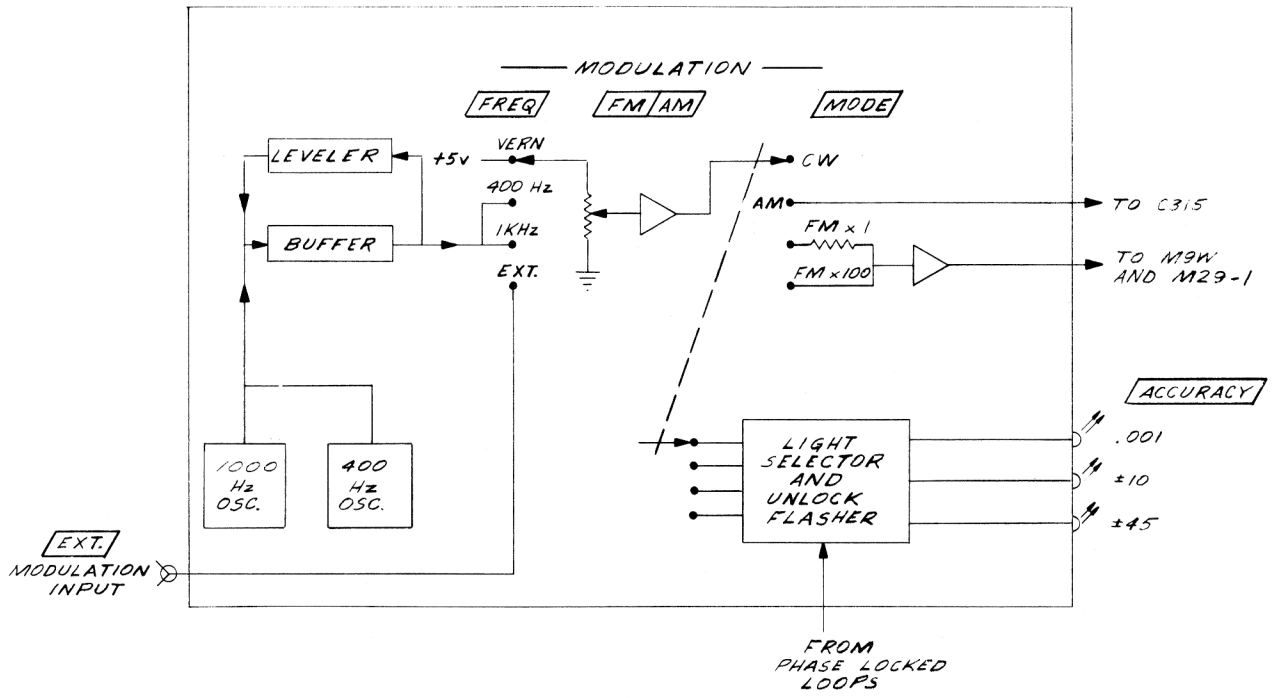

Figure 3-9. C316 Modulation Board

The two internal oscillators are amplified/leveled by the same circuit for simplicity but separately energized by the FREQ switch. The oscillators are twin T oscillators, one is at 400 Hz the other is at 1 kHz.

3.4.2 Accuracy Lights

Which LEDs are lit is determined by the MODE switch. If any of the phase locked loops unlock, the energized LEDs are made to flash by an IC timer which is activated by a DC level from any of the four phase locked loops in the instrument.

3.5 DPS2A - POWER SUPPLY

The DPS2 provides DC power for the rest of the instrument. See Figure 3-10.

3.5.1 Transformer & Filters

The transformer steps down the line voltage to appropriate levels for the three circuits. Full wave rectifiers and filter capacitors convert this voltage to DC.

3.5.2 +18 V SUPPLY

The +18 V circuit has a temperature-compensated precision voltage reference. This reference is compared to the output voltage by an error amplifier which corrects any error in the output voltage.

3.5.3 -18 V SUPPLY

The -18 V circuit compares the +18 V and -18 V outputs and holds the difference in their magnitudes to zero.

3.5.4 +7.3 V SUPPLY

The +7.3 V circuit uses a three-terminal adjustable voltage regulator IC to provide a pre-regulated +7.3 V output. This voltage supplies other voltage regulators throughout the instrument.

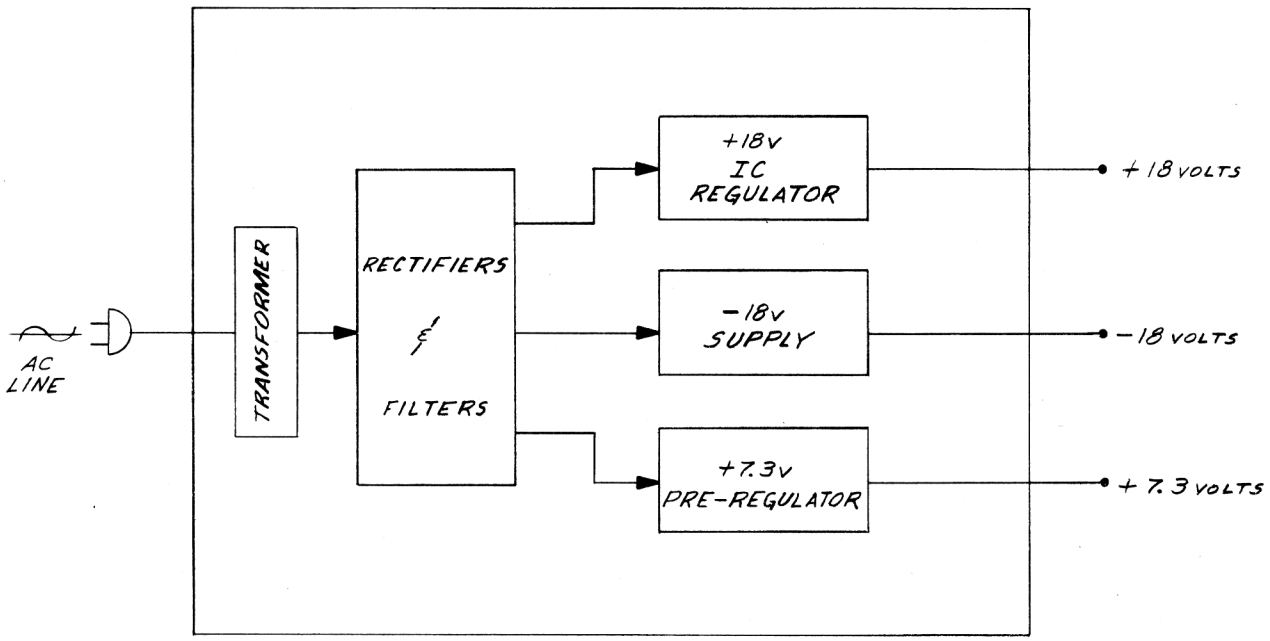

Figure 3-10. DPS2 - Power Supply.

Section 3.6 is deleted.

3.7 M9W - SWEEP OSCILLATOR

The M9W is the origin of the instrument's RF output frequency. This frequency is generated by heterodyning the signals from two higher frequency voltage controlled oscillators. See Figure 3-12.

3.7.1 Mixer

The narrow oscillator applies a signal of 1198 MHz to the mixer (except in the FM mode). The wide oscillator provides between 1199 and 1718 MHz. The difference (1-520 MHz) is applied to a wide band pre-amp and then sent to the M10W.

3.7.2 Wide Oscillator

The wide range of oscillation is achieved by applying to varactor diodes in the tank circuit an analog signal which is dependent upon the setting of the frequency switches on the instrument's front panel. An additional signal is applied to this VCO from the phase detector in the M34. This is the fine tuning signal which locks the wide oscillator on the proper frequency.

3.7.3 Narrow Oscillator

This oscillator also uses a varactor diode so that the frequency can be voltage controlled for phase locking and for FM operation.

The coarse modulating signal (FM) is applied to the varactor from the modulation board (C316). The frequency of this oscillator is accurately controlled by a "fine tuning" bias voltage from the M33 phase detector. The deviation can be controlled up to 500 kHz.

3.7.4 Levelers

This module contains three RF leveling circuits as shown in the diagram. These maintain a constant amplitude RF over the frequency range and with temperature variation. The output of a peak detector is compared to a constant DC level. Any error is amplified and applied to a PIN diode attenuator in series with the RF signal.

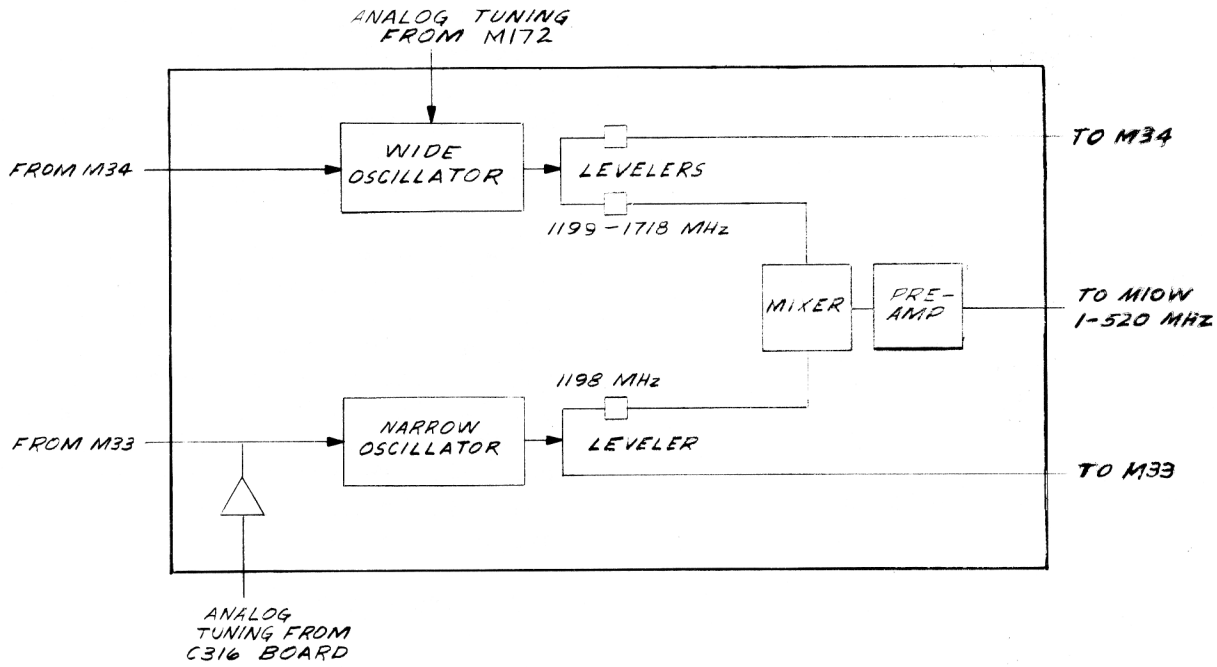

Figure 3-12. M9W Sweep Oscillator

3.8 M10W-6 - OUTPUT AMPLIFIER

The main function of the M10W module is to amplify the RF signal from the M9W to a level programmable between -7 and +13 dBm. A leveler circuit maintains a constant amplitude output signal over the wide frequency range. The Unleveled light driver causes the front panel light to glow when the leveler circuit exceeds its proper operating range. See Figure 3-13.

3.8.1 Amplifier

This section is a four-transistor wide band amplifier which can increase the RF by about 23 dB.

3.8.2 Leveler

The leveler uses a peak detector, differential amplifier and a PIN diode attenuator. The peak detector is fed from the RF output. The resulting level is compared to a DC (or AM) reference by the differential amp which supplies the control current to the PIN diode attenuator. If the detector RF output deviates from the reference level, the signal to the PIN diode causes the input to be decreased or increased.

In addition to providing a flat frequency response, the leveler allows for electronic control of the RF output amplitude by varying the DC reference. The reference comes from the meter board (C315).

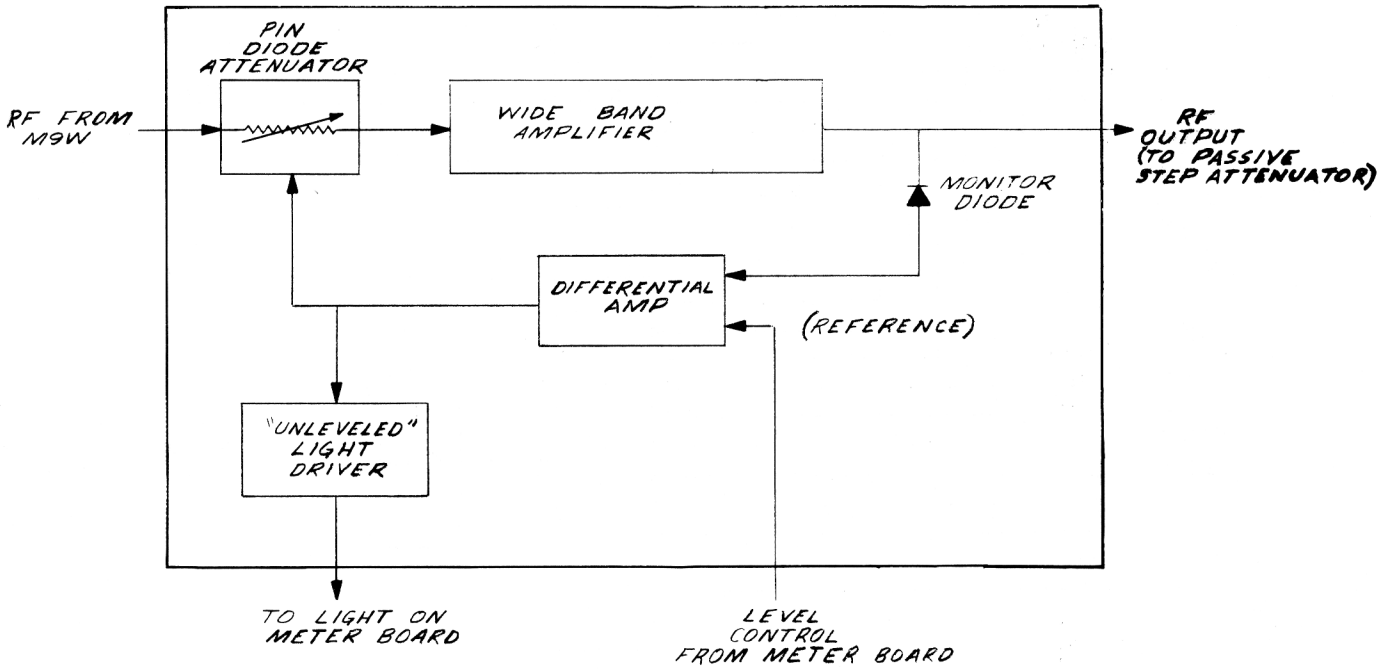

Figure 3-13. M10W - Output Amplifier

3.8.3 "Unleveled" Light Driver

When the differential amp in the leveler circuit is putting out a voltage which would cause the PIN diode attenuator to be at its high or low resistance limit, the leveling circuit can no longer be effective. The above voltage levels, which are applied to the unlevel light driver, are adequate to turn on a source of current for the indicator which appears through the front panel.

3.9 M172 - SWEEP DRIVE/DAC

This module provides two output voltages. One is linear from 0 V to -5 V as the frequency goes from 0 to 39 MHz, repeating every 40 MHz; the other varies from +7 V to -8 V as the frequency goes from 0 to 520 MHz. The second voltage is shaped to linearize the VCO in the M9W Sweep Oscillator.

Two digital-to-analog converter ICs, programmed by the front-panel Lever/Indicator switches, provide the 0 to 520 MHz voltage. This is shaped in the next section of the module. A third DAC provides the repeating 0 - 40 MHz voltage. Since the state of the 20's line depends on the 100's line, the 20's line is inverted when the 100's line is high.

The analog tuning signal from the M172 is "shaped" before driving the M9W wide oscillator. The shaper is an inverting DC amplifier which amplifies the input by a smaller factor for smaller magnitude inputs. Shaping this analog voltage compensates for the non-linear change in capacitance of the varactor diodes in the oscillator circuit.

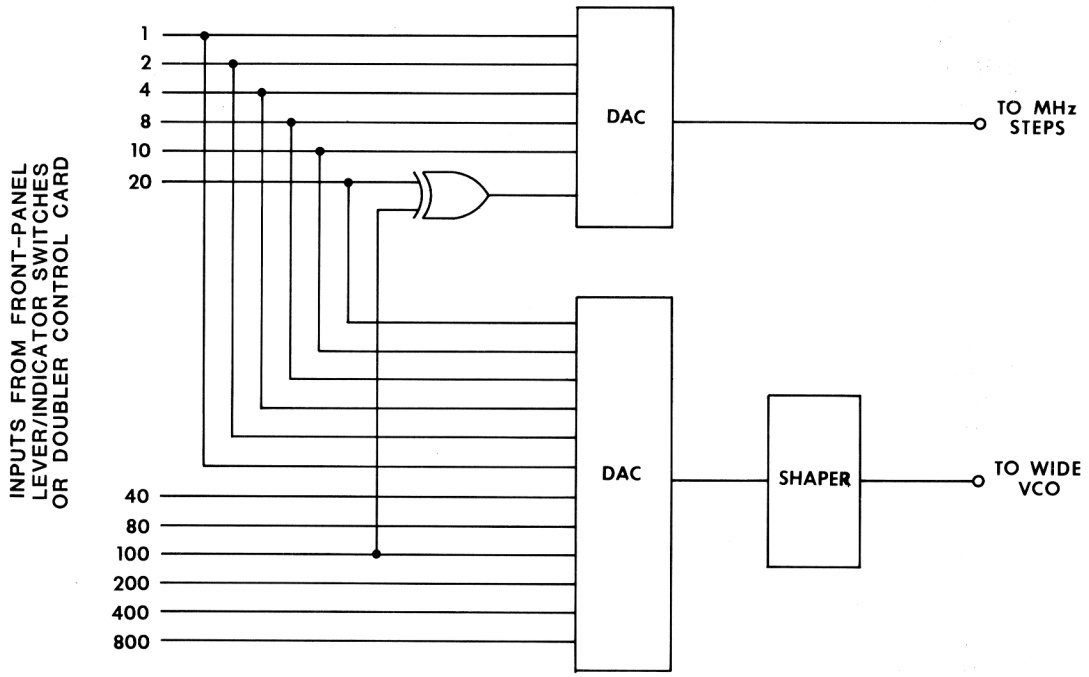

Figure 3-14. M172 Sweep Drive/DAC

3.10 M29-1 - FM REFERENCE

The M29-1 is a voltage to frequency converter, the output of which is used as a phase lock reference in the M33. The module includes a voltage variable current source which feeds (determines the frequency of) a square wave oscillator. (See Figure 3-15.) Zero volts in yields 2 MHz out.

3.10.1 Current Sources

This circuit provides both a positive and a negative source of current. The

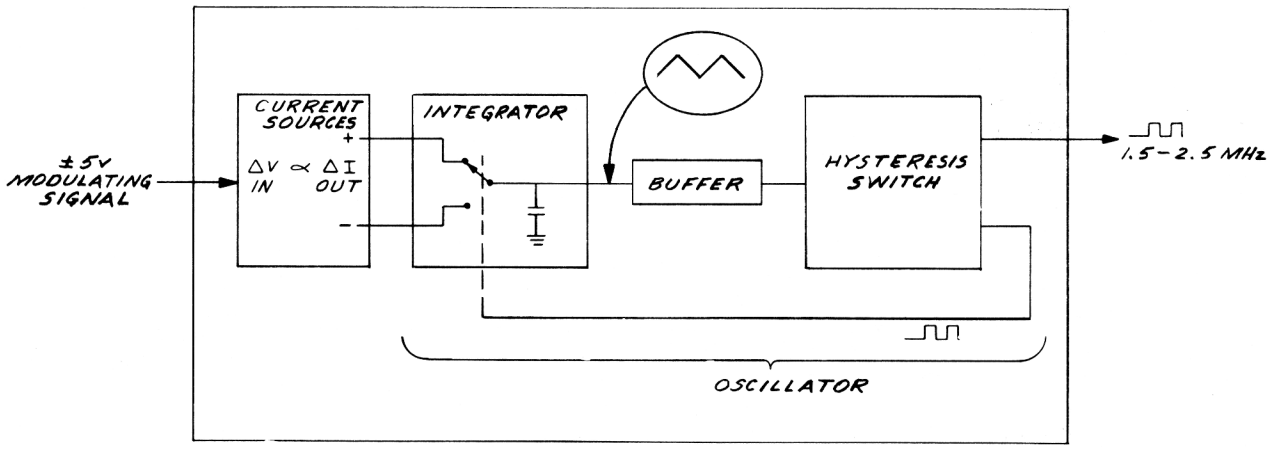

Figure 3-15. M29-1 - FM Reference

positive source is referenced to the negative source so that the instantaneous currents in both sources are equal.

The change in output current is directly proportional to the change in input voltage to the circuit. The input voltage may vary between -5 and +5 volts. The circuit is designed for a very linear current-out vs. voltage-in curve.

3.10.2 Oscillator

The square wave output is produced by the combination of an integrator and a hysteresis switch. The integrator converts a square wave to a triangle wave. The triangle wave causes the hysteresis switch to produce the square wave which is fed back to the integrator.

The integrator is made up of a current switch and a capacitor. The square wave applied to the current switch causes a square current signal to be applied to the capacitor.

Positive constant current produces an increasing voltage ramp on the capacitor and negative constant current produces a decreasing voltage ramp. For a square wave input, therefore, the output is a triangle wave.

Changing the magnitude of the "currents", by changing the input voltage to the module, changes the rate at which the capacitor charges and discharges to the hysteresis points thus the frequency of oscillation changes.

3.11 M30 - CRYSTAL REFERENCE

This module supplies reference frequencies at 1 kHz, 1 MHz, 2 MHz, 40 MHz and its harmonics, 1200 MHz (from 120 comb) and 1440 MHz to the phase locked loops in the instrument. These signals are produced by a 40 MHz crystal oscillator and a series of dividers and multipliers. See Figure 3-16.

3.11.1 40 MHz Oscillator

This crystal oscillator is the heart of the accuracy of the frequency determining circuits in the instrument. It is temperature compensated for frequency stability. A leveler circuit causes the oscillator output level to be the same in all M30 modules.

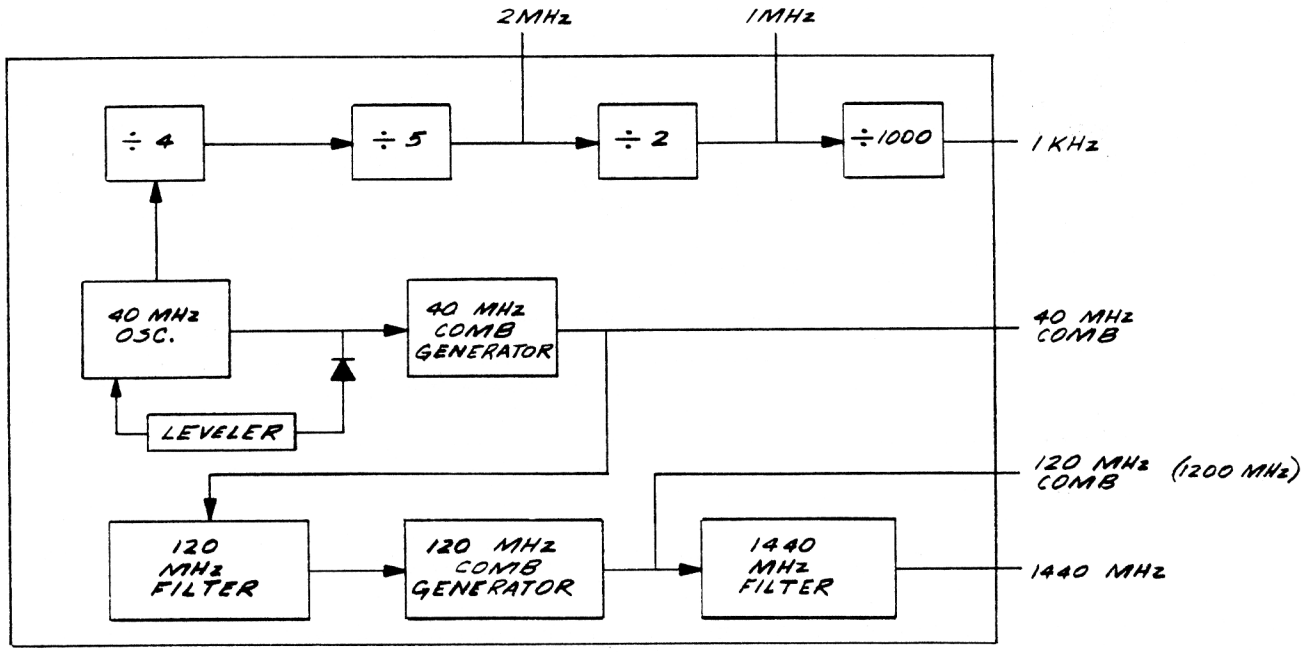

Figure 3-16. M30 - Crystal Reference

3.11.2 DIVIDERS

The frequencies below 40 MHz are produced by a series of TTL counters. A "divide by 4" produces the 10 MHz output for the phase-locked loop in the optional high stability reference. This frequency is further divided as shown in Figure 3-16 to provide the 1 MHz, 2 kHz and 1 kHz outputs.

3.11.3 MULTIPLIERS

The 40 MHz CW is fed to a harmonic generator which produces the "comb" output.

From the 40 MHz comb, 120 MHz is selected and applied to another harmonic generator. A sample of the 120 MHz comb output is also fed to a filter which provides the 1440 MHz output.

3.12 M31A - kHz STEPS

The input to this module is the BCD data from the front-panel "kHz" switches (to the right of the decimal point). The output frequency is (10 MHz - S_k kHz), where S_k is the number indicated by the kHz switches. If the FREQUENCY is set to 333.333 MHz, for example, the M31A output is 9.667 MHz. The block diagram of the M31 is shown in Figure 3-17.

3.12.1 VCO

The output frequency is generated by a Voltage Controlled Oscillator which is tuneable from 9.001 to 10.000 MHz.

3.12.2 PHASE LOCKED LOOP

Including the VCO in a phase-locked loop permits accurate programmability. The VCO tuning voltage comes from the Phase/Frequency Detector circuit. A 1 kHz signal from the Crystal Reference is applied to one input of the phase detector (IC9). A sample of the VCO input is divided by the Programmable Divider, and the result is applied to the other input of the phase detector. Any difference in

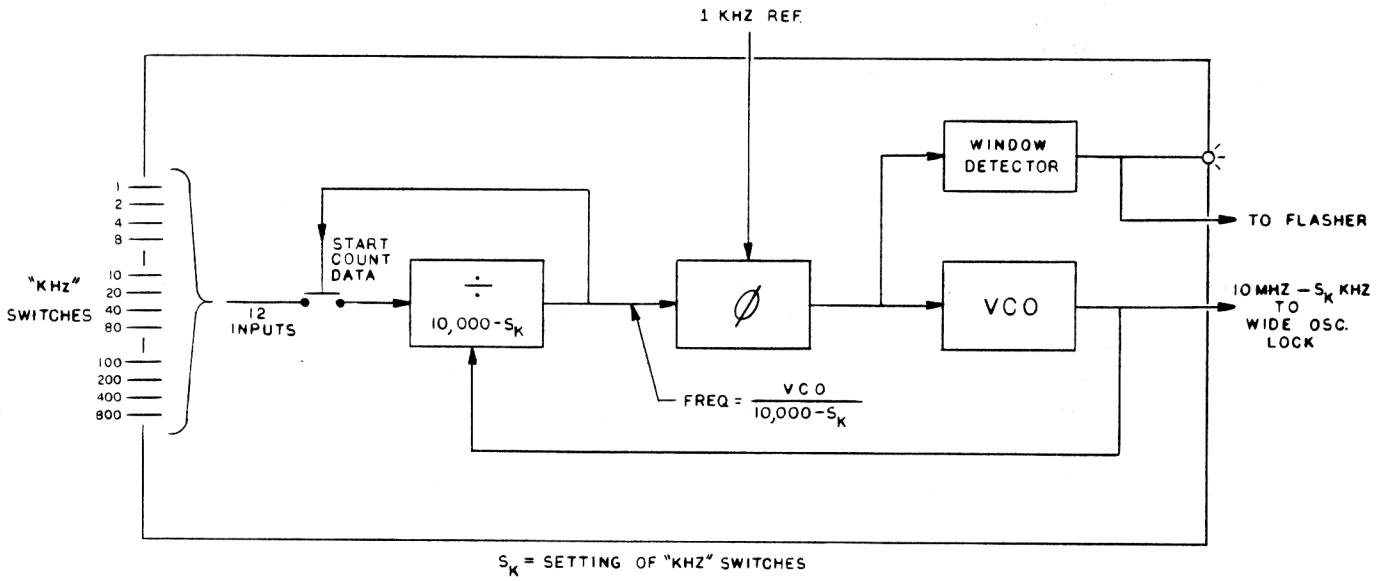

Figure 3-17. M31A - kHz Steps

phase or frequency in the signals applied to the phase detector inputs produces an error voltage at the phase detector output, which controls the VCO. The system is stable only when the phase and frequency error is zero, so that the output frequency is phase locked to the 1 kHz reference signal.

3.12.3 PROGRAMMABLE DIVIDER

In order for the M31A to perform properly, the divider is designed to divide the VCO frequency by (10,000-S_k) where S_k is the number set on the "kHz" switches. The divider counts the number of cycles at its input and puts out a pulse when the count reaches 10,000. The starting count is the number shown on the "kHz" switches. For example, if the instrument is set for 222.500 MHz, this circuit would divide by 9,500 (count from 500 to 10,000). Therefore, the variable input to the phase detector would be correct (1 kHz) only if the VCO output were 9,500 MHz.

3.12.4 UNLOCK INDICATOR

When the phase-locked loop is unlocked, the LED on top of the module will light and the front-panel ACCURACY lights will flash.

A window detector monitors the voltage level which is being fed from the phase detector to the VCO. If the voltage exceeds the normal operating range, power is applied to the module light and the flasher circuit on the Modulation Board.

3.13 M32A - MHz STEPS

The M32A provides, for the M34, a reference frequency which corresponds to the setting on the "MHz" switches. (See block diagram, Figure 3-18.) The M32A output range is 1448 to 1487 MHz, which repeats itself with every 40 MHz change of the frequency switches. Any specific M32A output relates to the "MHz" switch setting (S_m) by the equation (Output = (1448 + R) MHz), where R is the Remainder of dividing S_m by 40. If the front-panel is set, for example, for 333.000, R would be 13 (333.000 + 40 = 8 with a Remainder of 13). The output of the M32A would then be 1448 + 13 = 1461 MHz.

3.13.1 VCO

The output of the M32A is produced by a Voltage Controlled Oscillator. This VCO is coarsely tuned by the repeating analog output of the M22. Fine tuning is the result of including the VCO in a phase-locked loop. In addition to the VCO, the phase-locked loop includes a phase detector and Programmable Divider.

3.13.2 PROGRAMMABLE DIVIDER

A sample of the VCO output is mixed with the 1440 MHz signal from the crystal Reference producing a difference frequency of from 8 to 47 MHz, which is then shaped into TTL pulses and applied to the Programmable Divider.

The Divider counts the falling edges of the 8-47 MHz input pulses, resetting each time a count of 47 is reached. The reset pulse is applied to one input of the phase detector. By controlling the starting count of the Programmable Divider, the effective divisor can be controlled.

The starting count of the Programmable Divider is selected by a Read Only Memory, which is programmed to provide the correct "R" information for each "S_m" setting. This "R" is then applied to the Programmable Divider as the starting count. Thus, as the starting count varies from 0 to 39, the effective divisor varies from 47 to 8.

When the VCO is running at the correct frequency, the Programmable Divider reset pulse rate will be 1 MHz.

3.13.3 PHASE DETECTOR

One input to the phase detector is the reset pulse from the Programmable Divider. The other input is a 1 MHz fixed reference signal from the Crystal Reference. The phase detector output is a voltage determined by the difference in phase at the phase detector inputs, and is used to correct any error in the VCO frequency or phase.

If the VCO output frequency is too high, for example, the phase detector output becomes more negative, thus increasing the VCO varactor diode tuning capacitance and lowering the VCO frequency. If the VCO frequency is too low, the reverse occurs. Thus, the loop will tend to maintain zero phase or frequency error. A voltage-controlled attenuator between the phase detector circuit and the VCO keeps the open-loop gain of the phase-locked loop relatively constant over the programmed frequency range, allowing the loop noise to be minimized.

3.13.4 UNLOCKED INDICATOR

When the phase-locked loop is unlocked, the LED on top of the module will light and the front-panel ACCURACY lights will flash.

A window detector monitors the voltage level which is being fed from the phase detector to the VCO. If the voltage exceeds the normal operating range, power is applied to the module light and the flasher circuit on the Modulation Board.

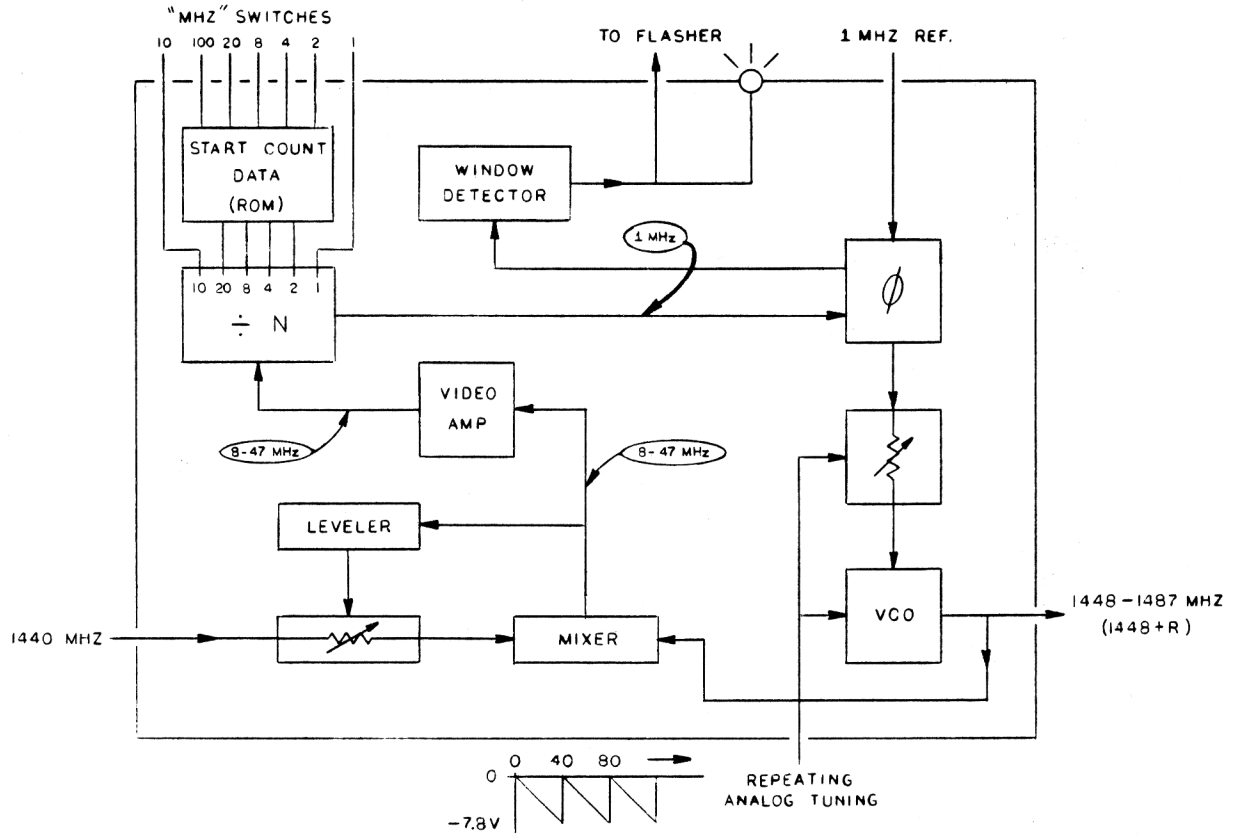

Figure 3-18. M32A - MHz Steps

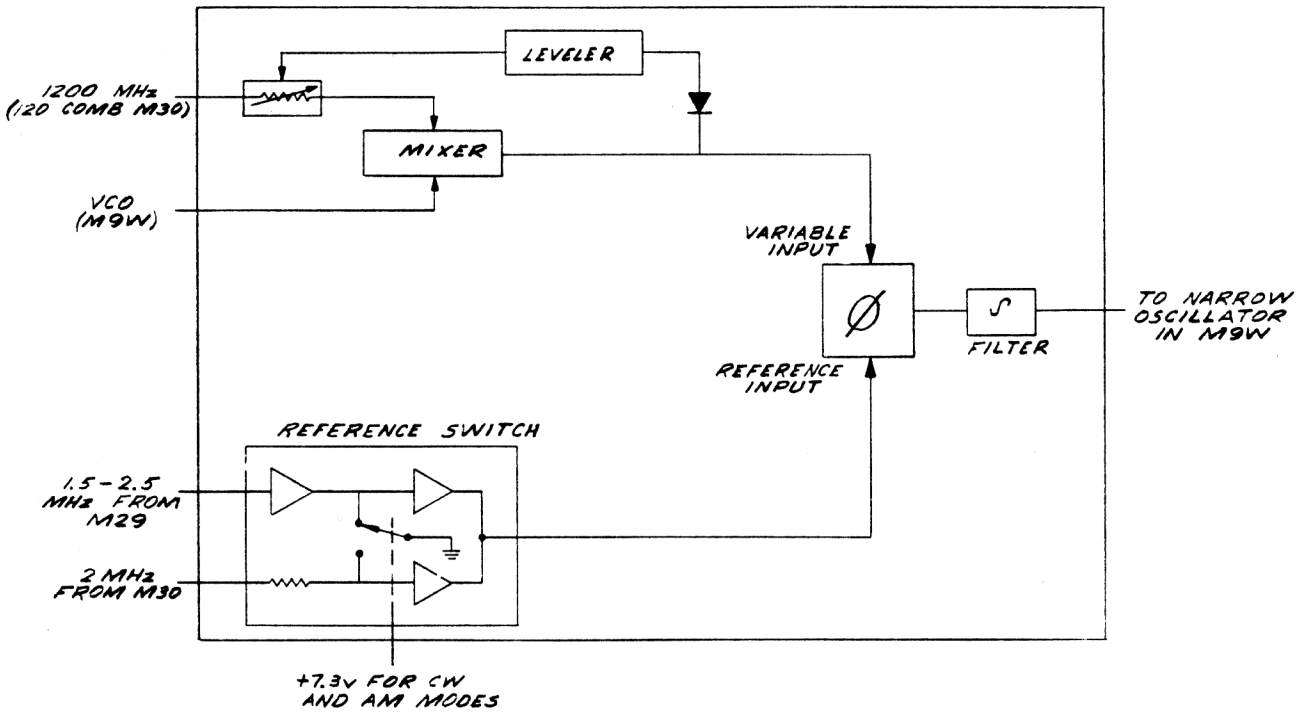

Figure 3-19. M33 - Narrow Oscillator Lock

3.14 M33 - NARROW OSCILLATOR LOCK

The M33 is part of a phase locked loop for which the VCO is the "Narrow Oscillator" in the M9W. The M33 includes a phase detector, mixer and an electronic "reference" switch. See Figure 3-19.

3.14.1 Phase Detector

This circuit compares the reference frequency to the variable frequency which represents the VCO output. IF the VCO is too high, for example, the phase detector puts out a more positive voltage which is filtered and inverted by an integrator and applied to the VCO (narrow oscillator) to lower the frequency.

3.14.2 Mixer

The phase detector can not operate at UHF frequencies so the VCO is mixed with 1200 MHz CW. This provides an offset frequency which is the variable input to the phase detector. The deviation of this variable signal from 2 MHz is precisely the same as the deviation of the VCO from 1198 MHz.

3.14.3 Reference Switch

This circuit, controlled by the MODE switch on the instrument front panel, selects either the 2 MHz CW reference for CW operation or the FM reference (1.5-2.5 MHz) for FM operation of the instrument. The reference switch uses a hex inverter to electronically route the reference signals as well as to guarantee that TTL levels will be fed to the phase detector.

3.15 M34 - WIDE OSCILLATOR LOCK

This module provides the fine tuning program for the wide oscillator in the M9W. Figure 3-20 is the block diagram of the M34. The letters A thru F relate the signals at the associated points in the module to the graphs A thru F in Figures 3-18 and 3-19. The M34 phase locks the VCO to 1198 MHz plus the frequency indicated on all six front panel switches.

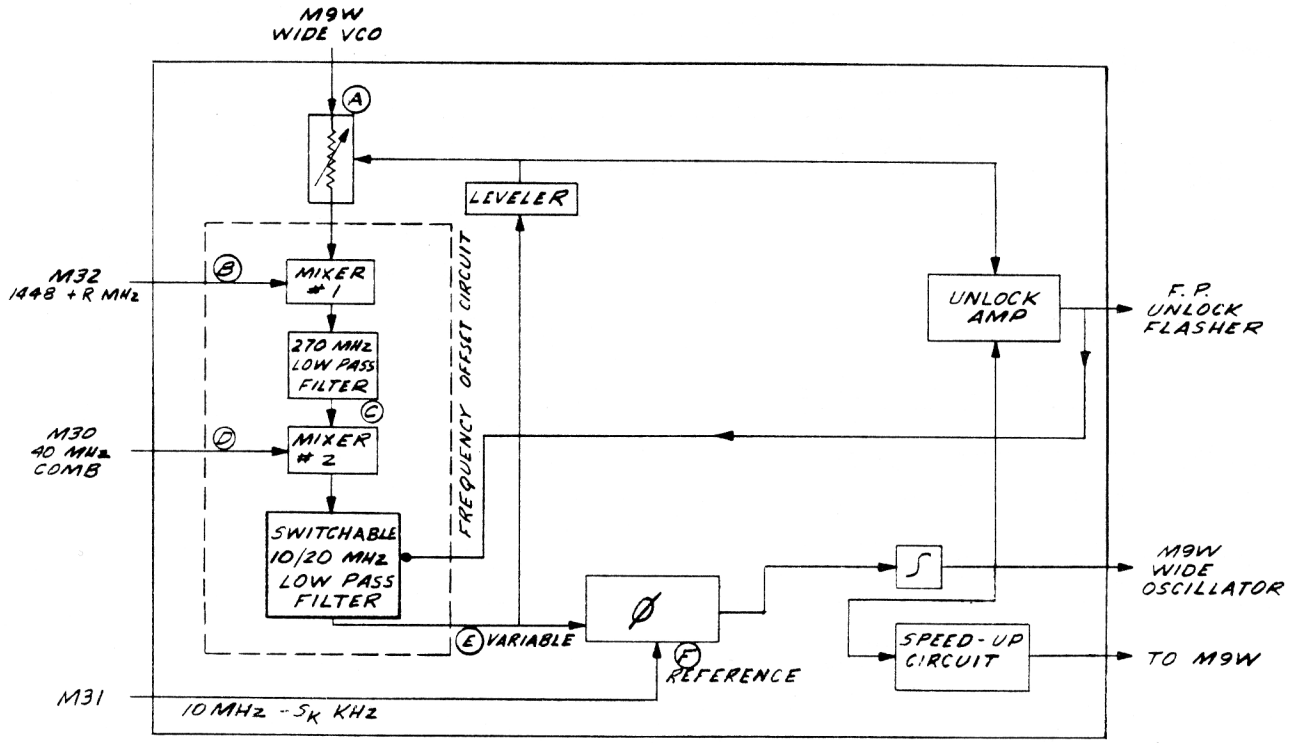

Figure 3-20. M34 - Wide Oscillator Lock

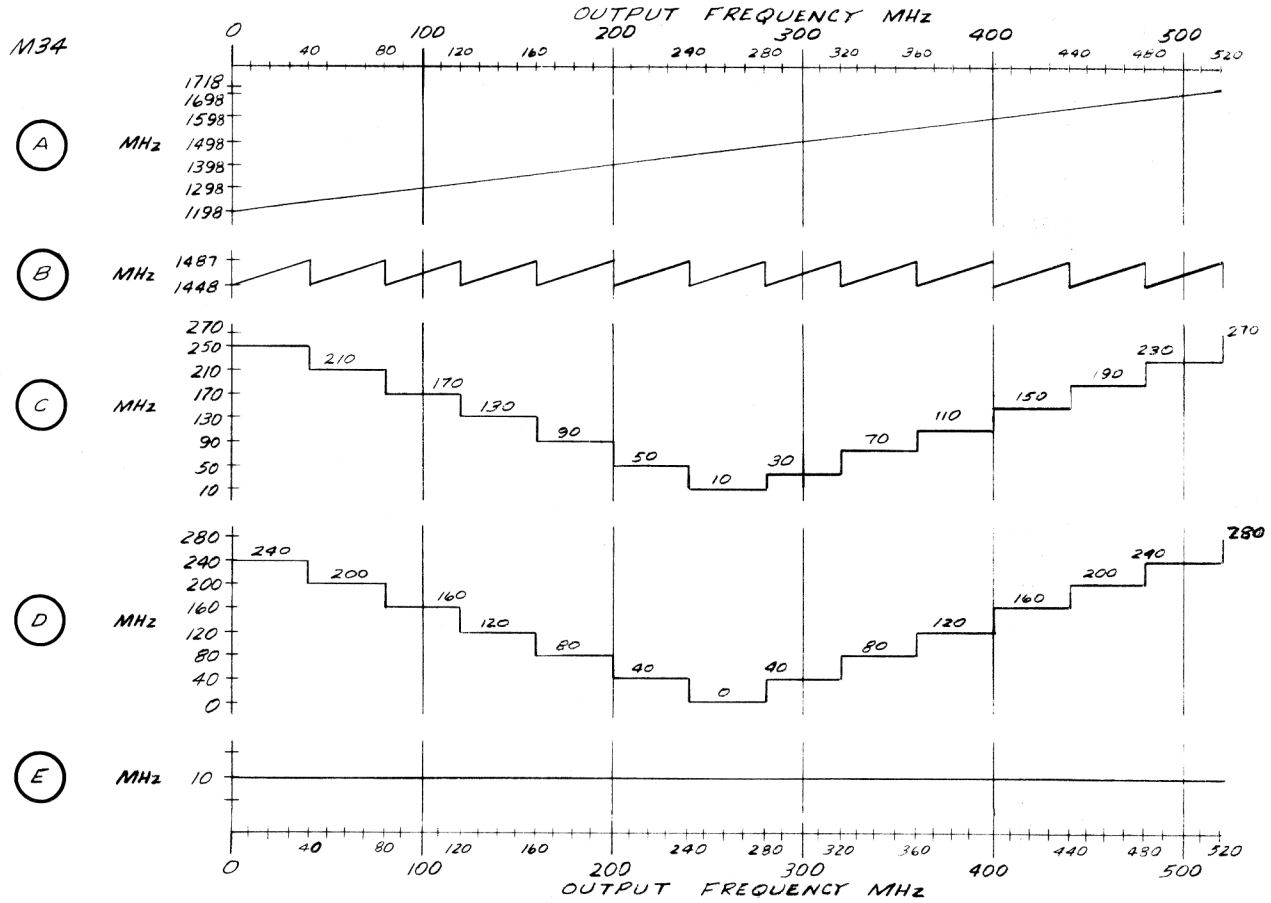

Figure 3-21. M34 - Signal Frequencies

The frequency offset circuit converts the frequency of the VCO to a lower frequency which retains the frequency error information for use by the phase detector. In addition to the frequency offset circuit and the phase detector, several auxillary circuits are included.

3.15.1 Phase Detector

The phase detector compares the "offset" VCO frequency to the reference frequency from the M31. (Refer to the description of the M31 for a more detailed description of this 10.000 - 9.001 MHz reference.)

The phase detector output voltage goes positive or negative to ultimately drive the wide oscillator higher or lower in frequency until both inputs to the phase detector are the same frequency. The integrator serves as a low pass filter for the phase detector.

3.15.2 Frequency Offset Circuit

The VCO error information must be converted to a frequency useable by the phase detector. This conversion is made by mixer #1, a 270 MHz low pass filter, mixer #2 and a 10 MHz low pass filter. Refer to Figures 3-20, 3-21 and 3-22 for descriptions of signals.

Mixer #1 heterodynes the VCO frequency with the "MHz steps" reference frequency (1448 + R) MHz. The difference frequency, |1448 + R - VCO|, is below 270 MHz. This signal is sent to mixer #2 where it is heterodyned with the 40 MHz comb. For any output frequency graph D in Figure 3-21 shows only the comb frequency which will yield the desired output (below 20 MHz) of mixer # 2. If the loop is locked, mixer # 2 will produce a 10 MHz difference as shown in Figure 3-21 (assuming the "kHz" switches are set for

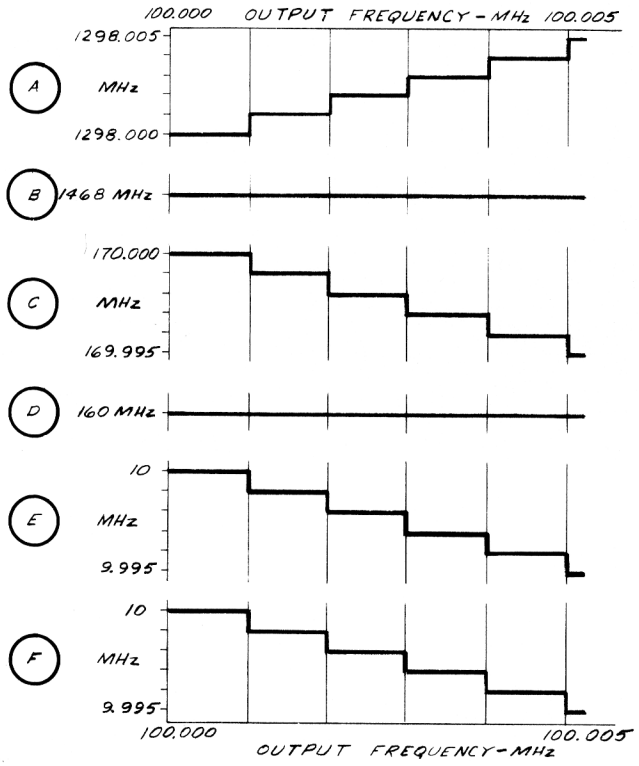

Figure 3-22. M34 - Frequencies (Expanded)

000). Figure 3-22 shows signals A thru F for a case when the kHz switches are not 000.

The filter after the mixer #2 blocks all the outputs of the mixer except the lower frequency signal containing the VCO error information. When the unit is unlocked the filter passes up to 20 MHz (to be able to capture over the 20 MHz range allowed for analog tuning). Once the loop is locked the filter decreases to 10 MHz to further eliminate phase locked loop related spurious signals.

3.15.3 Auxillary Circuits

The "speed-up circuit" is activated when the phase locked loop becomes unlocked. The output of this circuit is sent to the M9W to cause the VCO to be tuned faster by the analog voltage.

The "unlock" amp monitors both the tuning voltage from the phase detector and the leveler voltage to detect an unlocked condition of the M34. When unlock occurs, it sends a voltage to the flasher circuit.

The leveler circuit maintains a constant input amplitude to the phase detector by controlling the amplitude of the input from M9W wide oscillator. The input to the phase detector (about 10 MHz) is peak detected and compared to a DC reference in the leveler circuit. The leveler circuit controls a PIN diode attenuator which is between the VCO input and mixer #1.

SECTION 4
PERFORMANCE TESTS

4.1 INTRODUCTION

The purpose of the performance tests in the following paragraphs is to verify that the Model 3000 Signal Generator meets its published specifications (paragraph 1.2). Individual performance tests consist of: the specification to be verified, the method of testing, a list of equipment required and a detailed test procedure including in some cases a simplified setup drawing.

Critical specifications for each item of test equipment are listed in Table 4-1 of Recommended Test Equipment. Except as detailed settings of test equipment apply to performance test procedures, all other test equipment operating details are omitted.

The Signal Generator should have its top and bottom covers installed for the performance tests. All of the tests can be performed without access to the internal controls. Before applying power to the Signal Generator see Section 2 for details of electrical installation. The line voltage should be maintained at 115 or 230 volts ±10%, 50 or 60 Hz throughout the tests. The performance test procedures are begun after a two-hour minimum warmup of the Signal Generator in a +20 to +30° C ambient temperature range.

A copy of the Performance Test record (PTR) is provided at the end of this section for convenience in recording the performance of the Model 3000 during performance tests. It can be filled out and used as a permanent record for incoming inspection or it can be used as a guide for routine performance testing. The PTR lists the paragraph, test, basic control settings and limits. All of the tests refer to this test record.

TABLE 4-1. RECOMMENDED TEST EQUIPMENT FOR MODEL 3000 PERFORMANCE TESTS

INSTRUMENT	CRITICAL REQUIREMENT	RECOMMENDED
Digital Multimeter	10 VDC: ±(0.07%R+0.02%FS)	Keithley 179
Distortion Analyzer	Range: 5 Hz to >25 kHz	HP334A
Frequency Counter	Range: to 525 MHz	HP5300B/5303B
Function Generator	Level: 10 Vp-p sine wave into 600 ohm load Range: >0.2 Hz to >25 kHz Distortion: <1%	Wavetek 130

TABLE 4-1. (Cont'd)

Power Meter	Range: 10 to >520 MHz Input Level: -7 to +13 dBm Accuracy: ±1% FS	HP435A/8481A
Modulation Meter	Range: 5 to >520 MHz Residual FM: <100 Hz (rms) (quiet room) Residual AM: <0.1% (rms) (in CW) AM Accuracy: ±(2%R+1%FS)	AFM2 Radiometer
Oscilloscope	Range: DC to 2 MHz Sensitivity: 2 V/cm (AC coupled)	Tektronix D10/ 5A18N/5B10N
Spectrum Analyzer	Range: 500 kHz to 1200 MHz Display: 2 dB log and 10 dB log	HP8554L/8552B/ 141T
Precision Attenuator Pads	10, 20, 30 and 40 dB	Weinschel 50-10, 50-20, 50-30, and 50-40
Wideband Amplifier	Range: 1 to 520 MHz Gain: 26 dB Impedance: 50 ohm	HP8447D
Sweep/Signal Generator	Range: 1 to 520 MHz	Wavetek 2001
VSWR Bridge	5 to 525 MHz, 50 ohm 50 dB directivity	Wiltron 60N50
Coaxial Short	Type N female	HP11511A
50 ohm Load	BNC	HP11593A
Loop Probe	See Figure 4-9.	

4.2 FREQUENCY RANGE AND RESOLUTION TEST

SPECIFICATION

Range	1 MHz to 520 MHz selectable in 1 kHz steps.
Resolution	1 kHz

METHOD

A frequency counter is used to measure the frequency range and the frequency resolution. All frequencies in CW and AM modes between 1 and 520 MHz are selected by front-panel lever/ indicator switches. Each of the digits of the frequency selector (a total of 56) will be tested. The 0 through 9 kHz digits provide 1 kHz resolution.

EQUIPMENT

Frequency Counter HP5300B/5303B

PROCEDURE

1. Set the Signal Generator controls as follows:

FREQUENCY selector	050.000 MHz
MODULATION MODE	CW
MODULATION FREQ	(Inactive in CW MODE)
MODULATION FM/AM	(Inactive in CW MODE)
OUTPUT VERNIER	Fully Clockwise
OUTPUT step attenuator	+10 dBm

2. Connect the Signal Generator RF out connector to the 50 ohm input of the frequency counter. Set the counter to read frequency to seven digits.

3. Observe the frequency counter reading. Increase the setting of the Signal Generator FREQUENCY selector in 1 kHz steps and verify that the frequency counter reading increases by 1.00 kHz ±1 count for each step increase from 1 through 9 kHz. The foregoing procedure verifies the 1 kHz resolution specification.

4. Repeat the procedure in step 3 for all other step increases indicated in the table below beginning with the 10 kHz digits. If the actual counter frequency increase per step is equal to the allowable increase per step ±1 count for each of the steps indicated in the table, place a check mark in the applicable space on line 1 of the PTR.

FREQUENCY Selector		Frequency Counter Reading	
Range (MHz)	Increase per step	No. Digits	Allowable Increase per step ±1 count
050.000-050.009	1 kHz	7	1.00 kHz
050.000-050.090	10 kHz	7	10.00 kHz
050.000-050.900	100 kHz	6	100.0 kHz
050.000-059.000	1 MHz	5	1.000 MHz
001.000-091.000	10 MHz	5	10.000 MHz
020.000-520.000	100 MHz	6	100.00 MHz

4.3 FREQUENCY ACCURACY TEST

SPECIFICATION

Accuracy	CW and AM modes	±0.001% after 15 min. (Typ ±0.002% after 2 hours within 3 months of calibration)
	FMx1 mode	±(0.001% +10 kHz)
	FMx100 mode	±(0.001% +45 kHz)

METHOD

A frequency counter is used to measure frequency accuracy. In CW and AM modes all frequencies between 1 and 520 MHz are derived from a single crystal-controlled oscillator. The Signal Generator will be tested at one CW frequency to verify that the crystal-controlled oscillator operates within specified limits.

Frequency accuracy in FM modes depends upon the FM system accuracy. The FM system accuracy includes the accuracy of a voltage-controlled oscillator in addition to the accuracy of the crystal-controlled oscillator. Frequency accuracy in FMx1 and FMx100 modes will be measured in VERNIER position with a DC modulation signal equal to the peak of maximum sinusoidal modulation signals.

EQUIPMENT

Frequency Counter	HP5300B/5303B

PROCEDURE

1. Set the Signal Generator controls as follows:

FREQUENCY selector	040.000 MHz
MODULATION MODE	CW
MODULATION FREQ	(Inactive in CW MODE)
MODULATION FM/AM	(Inactive in CW MODE)
OUTPUT VERNIER	Fully Clockwise
OUTPUT step attenuator	+10 dBm

2. Connect the 50 ohm input of the frequency counter to the Signal Generator RF out connector.

3. The counter should read between 39,999.60 and 40,000.40 kHz. Record the counter reading to seven places on line 2 of the PTR.

4. Set the Signal Generator controls as follows:

FREQUENCY selector	001.000 MHz
MODULATION MODE	FMx1
MODULATION FREQ	VERNIER
MODULATION FM/AM	5 kHz

5. The frequency counter should read between 994.99 and 1,015.01 kHz. Record the counter reading to 6 places on line 3 of the PTR.

6. Set the Signal Generator MODULATION MODE to FMx100.

7. The frequency counter should read between 1,454.99 and 1,545.01 kHz. Record the counter reading to 6 places on line 4 of the PTR.

4.4 FREQUENCY STABILITY TEST

STABILITY — <0.2 PPM/hour in CW and AM modes
500 Hz/10 minutes in FMx1 mode

METHOD — The frequency stability is measured with a frequency counter at the indicated time intervals after the 2 hour minimum warmup.

EQUIPMENT

Frequency Counter — HP5300B/5303B

PROCEDURE

1. Set the Signal Generator controls as follows:

FREQUENCY selector	520.000 MHz
MODULATION MODE	CW
MODULATION FREQ	(Inactive)
MODULATION FM/AM	(Inactive)
OUTPUT VERNIER	Fully Clockwise
OUTPUT step attenautor	+10 dBm

2. Connect the 50 ohm input of the frequency counter to the Signal Generator RF out connector.

3. Allow the Signal Generator to warm up for two hours minimum. Record the frequency counter readings to nine-places at 15-minute intervals for a one-hour period. The difference between the maximum and minimum readings in the one-hour period should not exceed 104 Hz. Record the difference between the maximum and minimum readings in Hz on line 5 of the PTR.

4. Set the Signal Generator MODULATION MODE to FMx1, the MODULATION FREQ to VERNIER and adjust the MODULATION FM/AM control to 5 kHz.

5. After a one-minute interval record the frequency counter readings to nine-places at five-minute intervals for a ten-minute period. The difference between the maximum and minimum readings in the ten-minute period should not exceed 500 Hz. Record the difference between the maximum and minimum frequency readings in Hz on line 6 of the PTR.

4.5 OUTPUT LEVEL ACCURACY TESTS

SPECIFICATION

Power Level — +13 to -137 dBm (1 V to 0.03 μV)

Attenuator Range — Continuously adjustable from +13 to -137 dBm, in 10 dB steps and an 11 dB vernier. Output level is indicated on a front-panel meter calibrated in dBm and volts rms.

Total Level Accuracy	+13 to -7 dBm:	±1.25 dB	(Typ ±0.75 dB)
	-7 to -77 dBm:	±1.95 dB	(Typ ±1.25 dB)
	< -77 dBm :	±2.75 dB	(Typ ±1.5 dB)

Accuracy Breakdown

Flatness	(+13 to -7 dBm) ±0.75 dB (Typ ±0.5 dB)
Output Meter	±0.5 dB
Step Attenuator	±0.5 dB to 70 dB (±0.2 dB calibration error)
	±1.0 dB to 130 dB (±0.5 dB calibration error)

METHOD

The ±1.25 dB level accuracy between +13 and -7 dBm consists of the sum of the output meter error (±0.5 dB) and the flatness (±0.75 dB). Both errors are measured with a power meter.

The output meter error is measured at 50 MHz in two 10 dB output ranges (+13 to +3 dBm and +3 to -7 dBm).

The flatness is measured relative to 50 MHz in 10 MHz steps between 10 and 520 MHz at +12, +3 and -7 dBm output levels.

The level accuracy below -7 dBm depends upon the output step attenuator error in addition to the output meter error and the flatness.

The output step attenuator is a combination of pi-pad sections of 10, 20, 30, 30 and 40 dB. These five pi-pads are programmed by cams to provide 0 to 130 dB of attenuation in 10 dB steps as shown in the table below.

OUTPUT STEP ATTENUATOR POSITION	ACTIVE STEP ATTENUATOR PADS (X)				
dBm	10 dB	20 dB	30 dB	30 dB	40 dB
+ 10					
0					
- 10	x				
- 20		x			
- 30			x		
- 40	x		x		
- 50		x	x		
- 60			x	x	
- 70	x		x	x	
- 80		x	x	x	
- 90		x		x	x
-100			x	x	x
-110	x		x	x	x
-120		x	x	x	x
-130	x	x	x	x	x

Note that no step attenuator pads are active in the +10 dBm and 0 dBm positions. A leveled pin-diode attenuator reduces the output level by 10 dB in all positions of the output step attenuator below +10 dBm. The output level over the entire range of +13 dBm to -137 dBm including a 10 dB vernier is controlled by the pin leveler system.

The output step attenuator error is measured by an RF substitution method. Each of the five pads in the output step attenuator is measured at 520 MHz. The second 30 dB pad and the 40 dB pad are measured in combination with other pads. A reference output level is set with a power meter. A reference trace is obtained with a spectrum analyzer and a standard attenuator pad. The standard pad is removed and the output step attenuator position to be measured is substituted. The spectrum analyzer trace is returned to the reference level by resetting the Signal Generator output level. The resulting Signal Generator output level is measured and compared to the original power meter reference level. A 26 dB RF amplifier is required to boost signal levels below the -60 dBm level.

4.5.1 Output Meter Accuracy Test

EQUIPMENT

Power Meter and Sensor	HP435A/8481A

PROCEDURE

1. Set the Signal Generator controls as follows:

FREQUENCY selector	050.000 MHz
MODULATION MODE	CW
MODULATION FREQ	(Inactive in CW MODE)
MODULATION FM/AM	(Inactive in CW MODE)
OUTPUT VERNIER	Fully Clockwise
OUTPUT step attenuator	+10 dBm

2. Calibrate the power meter and power sensor. Set the power meter to the +15 dBm range. Connect the power sensor to the Signal Generator RF out connector. (When reading the power meter, set the range switch so that the meter indicates between 0 and -5 dBm).

NOTE: The Signal Generator indicated output level is equal to the sum of the OUTPUT meter reading and the step attenuator setting. The difference between the actual power meter reading and the indicated output level is the OUTPUT meter error. For example, the indicated output level is +13 dBm for an OUTPUT meter reading of +3 dBm and an OUTPUT step attenuator setting of +10 dBm. If the power meter reading is +13.15 dBm, the OUTPUT meter error is +0.15 dB.

3. Adjust the Signal Generator OUTPUT VERNIER for a +3 dBm OUTPUT meter reading. Observe the power meter reading and make a note of the OUTPUT meter error to the nearest 0.05 dB (¼ division). Continue to adjust the OUTPUT VERNIER for OUTPUT meter reading increments of 1 dB between +3 and -7 dBm, and note the OUTPUT meter error at each reading. As the test progresses make a note of the maximum OUTPUT meter error to the nearest 0.05 dB. The allowable error is ±0.5 dB. Record the maximum OUTPUT meter error on line 7 of the PTR.

4. Set the Signal Generator OUTPUT step attenuator to 0 dBm and repeat step 3 above. Record the maximum OUTPUT meter error on line 8 of the PTR.

4.5.2 Flatness Test

EQUIPMENT

Power Meter and Sensor	HP435A/8481A

PROCEDURE

1. Set the Signal Generator controls as follows:

FREQUENCY selector	050.000 MHz
MODULATION MODE	CW
MODULATION FREQ	(Inactive in CW MODE)
MODULATION FM/AM	(Inactive in CW MODE)
OUTPUT VERNIER	Fully Clockwise
OUTPUT step attenuator	+10 dBm

2. Set the power meter to the +15 dBm range. Connect the power sensor to the Signal Generator RF out connector.

3. Adjust the Signal Generator OUTPUT VERNIER for a +12 dBm power meter reading.

4. Set the Signal Generator FREQUENCY selector in 10 MHz steps between 10 and 520 MHz and observe the maximum change in the power meter readings from the +12 dBm reading in step 3. The maximum allowable change is ±0.75 dB. Record the maximum change to the nearest 0.05 dB (¼ division) on line 9 of the PTR.

5. Set the Signal Generator FREQUENCY selector to 050.000 MHz and adjust the OUTPUT VERNIER for a +3 dBm power meter reading.

6. Repeat step 4 above except observe the maximum change in the power meter readings from the +3 dBm reading in step 5. Record the maximum change from the +3 dBm reading to the nearest 0.05 dB on line 10 of the PTR.

7. Set the Signal Generator FREQUENCY selector to 050.000 MHz and the OUTPUT step attenuator to 0 dBm. Adjust the OUTPUT VERNIER for a -7 dBm power meter reading.

8. Repeat step 4 above except observe the maximum change in the power meter readings from the -7 dBm reading in step 7. Record the maximum change from the -7 dBm reading to the nearest 0.05 dB on line 11 of the PTR.

4.5.3 Step Attenuator Accuracy Test

EQUIPMENT

Power Meter and Sensor	HP435A/8481A
Spectrum Analyzer	HP8554L/8552B/141T
10 dB Attenuator Pad	Weinschel 50-10
20 dB Attenuator Pad	Weinschel 50-20
30 dB Attenuator Pad	Weinschel 50-30
40 dB Attenuator Pad	Weinschel 50-40
Wideband Amplifier 26 dB	HP8447D

PROCEDURE

1. Set the Signal Generator controls as follows:

FREQUENCY selector	520.000 MHz
MODULATION MODE	AM
MODULATION FREQ	VERNIER
MODULATION FM/AM	0% AM
OUTPUT VERNIER	Fully Clockwise
OUTPUT step attenuator	0 dBm

2. Set the power meter to the +10 dBm range. Connect the power sensor to the Signal Generator RF out connector.

3. Adjust the MODULATION FM/AM control of the Signal Generator for a +7 dBm power meter reading.

NOTE: Increasing the MODULATION FM/AM control setting in the preceeding step causes the OUTPUT meter needle to read **off scale.** This is normal.

4. Disconnect the power sensor from the Signal Generator RF out connector. Connect a standard 10 dB attenuator pad to the RF out connector. Connect the output of the attenuator pad to the spectrum analyzer as shown in Figure 4-1.

5. Set the spectrum analyzer to 520 MHz, the bandwidth to 10 kHz, the frequency span per division to 2 kHz, and the tuning stabilizer switch on. Set the video filter to 100 Hz and the vertical display to 2 dB per division.

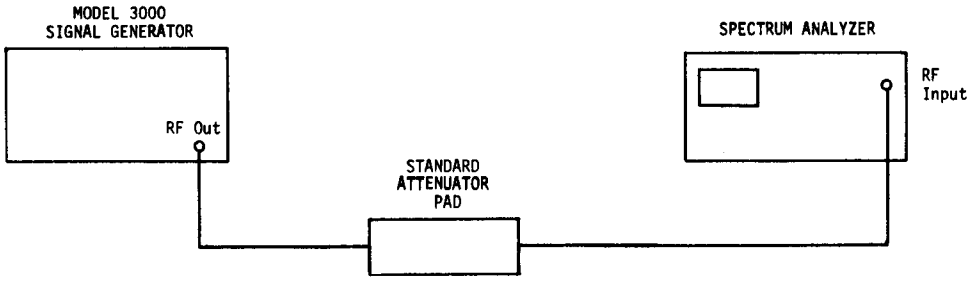

Figure 4-1. Step Attenuator Accuracy Setup

6. Use the log reference controls to obtain a peak trace one division below the log reference line of the spectrum analyzer display. Center the trace in the display with fine tuning.

7. Set the OUTPUT step attenuator of the Signal Generator to -10 dBm.

8. Disconnect the 10 dB attenuator pad from the setup and reconnect the spectrum analyzer to the RF out connector of the Signal Generator.

9. Adjust the MODULATION FM/AM control of the Signal Generator to realign the peak of the trace one division below the log reference line as in step 6.

10. Disconnect the cable to the Signal Generator RF out connector. Connect the power sensor to the Signal Generator RF out connector. Set the OUTPUT step attenuator to 0 dBm.

11. Observe the difference between the actual power meter reading and the +7 dBm reference setting in step 3. The difference or error should be ±0.7 dB maximum. Record the error on line 12 of the PTR.

12. Repeat steps 3 through 11 using the standard attenuator pads and the Signal Generator OUTPUT step attenuator settings indicated in the following table.

Steps 4 and 8 Attenuator pad dB	Step 7 OUTPUT Step Attenuator dBm setting	Step 11 Record Error on Line of PTR
10	-10	12
20	-20	13
30	-30	14
60	-60	15
90	-90	16

NOTE: To test the OUTPUT step attenuator below -60 dBm an RF amplifier (>20 dB gain) is required. Insert the 26 dB wideband amplifier between the standard attenuator pad and the spectrum analyzer (Figure 4-1). The allowable error for the -90 dBm setting (step 11) is ±1.5 dB. The OUTPUT step attenuator can be tested down to the -130 dBm position if a 40 dB RF amplifier is used and if precautions are taken to properly shield the RF output from the Signal Generator.

4.6 HARMONICS TEST

SPECIFICATION

Harmonics Outputs: >30 dB below fundamental from 10 to 520 MHz
>26 dB below fundamental from 1 to 10 MHz

METHOD

A spectrum analyzer is used to measure harmonics in the frequency range of the Signal Generator at +13 and +3 dBm output levels.

EQUIPMENT

Spectrum Analyzer: HP8554L/8552B/141T

PROCEDURE

1. Set the Signal Generator controls as follows

FREQUENCY selector	001.000 MHz
MODULATION MODE	CW
MODULATION FREQ	(Inactive)
MODULATION FM/AM	(Inactive)
OUTPUT VERNIER	Fully Clockwise
OUTPUT step attenuator	+10 dBm

2. Connect the Signal Generator RF out connector to the RF input of the spectrum analyzer.

3. Set the spectrum analyzer to measure the harmonic distortion of the Signal Generator for fundamental frequencies between 1 and 10 MHz. Set the bandwidth to 100 kHz, the

frequency span per division to 5 MHz, and the display to 10 dB/div. Locate the zero reference at the left edge of the graticule, and adjust the fundamental amplitude to the log reference line (0 dB) in the display.

4. Increase the setting of the Signal Generator FREQUENCY selector in 1 MHz steps between 1 and 10 MHz while observing the spectrum analyzer display. The harmonics should be >26 dB below the fundamental. Record the maximum harmonic observed in the display in dB below the fundamental on line 17 of the PTR.

5. Set the Signal Generator OUTPUT step attenuator to 0 dBm, and repeat steps 3 and 4 at the +3 dBm output level. Record the maximum harmonic observed in dB below the fundamental on line 18 of the PTR.

6. Set the Signal Generator FREQUENCY selector to 10 MHz and the OUTPUT step attenuator to +10 dBm.

7. Set the spectrum analyzer to measure harmonic distortion of the Signal Generator for fundamental frequencies between 10 and 520 MHz. Set the bandwidth to 300 kHz and the frequency span per division to 100 MHz.

8. Increase the setting of the Signal Generator FREQUENCY selector in 10 MHz steps between 10 and 520 MHz while observing the spectrum analyzer display. The harmonics should be >30 dB below the fundamental. Record the maximum harmonic observed in the display in dB below the fundamental on line 19 of the PTR.

9. Set the Signal Generator OUTPUT step attenuator to 0 dBm and repeat steps 7 and 8 at the +3 dBm output level. Record the maximum harmonic observed in dB below the fundamental on line 20 of the PTR.

4.7 NON-HARMONICS TEST

SPECIFICATION

Non-harmonics are shown in the following table:

Fundamental Range (MHz)	Non-harmonic Range (MHz)	Non-harmonic level dB below fundamental
1 to 3	1 to 3	>60
3 to 250	3 to 250	>65
3 to 350	3 to 350	>55
3 to 520	3 to 1000	>35

METHOD

A spectrum analyzer is used to measure the level of non-harmonics in the 1 to 520 MHz range at +13 dBm, the maximum specified output level of the Signal Generator.

EQUIPMENT HP8554L/8552B/141T

PROCEDURE

1. Set the Signal Generator controls as follows:

FREQUENCY selector	001.000 MHz
MODULATION MODE	CW
MODULATION FREQ	(Inactive)
MODULATION FM/AM	(Inactive)
OUTPUT VERNIER	Fully Clockwise
OUTPUT step attenuator	+10 dBm

2. Connect the Signal Generator RF out connector to the RF input of the spectrum analyzer.

3. Set the spectrum analyzer to measure the non-harmonic content of the Signal Generator ouptut between 1 and 3 MHz. Set the bandwidth to 30 kHz, the frequency span per division to 1 MHz and the display to 10 dB/div. Locate the zero reference at the left edge of the graticule, and adjust the fundamental to the log reference line (0 dB) in the display.

4. Increase the setting of the Signal Generator FREQUENCY selector in 1 MHz steps between 1 and 3 MHz. The non-harmonics between 1 and 3 MHz should be 60 dB below the fundamental. Record the maximum non-harmonic observed in the display between 1 and 3 MHz in dB below the fundamental on line 21 of the PTR.

5. Set the spectrum analyzer to measure the non-harmonic content of the Signal Generator output between 3 and 250 MHz. Set the bandwidth to 300 kHz and the frequency span per division to 100 MHz.

6. Increase the setting of the Signal Generator FREQUENCY selector in 1 MHz steps between 3 and 10 MHz and in 10 MHz steps between 10 and 520 MHz while observing the spectrum analyzer display. Use the table below to determine the maximum non-harmonic level in each of the frequency ranges shown. Record the maximum non-harmonic level observed in each range indicated in the table on the applicable line of the PTR.

Frequency Range of Fundamental (MHz)	Non-harmonic Frequency Range (MHz)	Non-harmonic Level (dB below fundamental)	Record Max Non-harmonic (Line number in PTR)
3-250	3-250	>65	22
3-350	3-350	>55	23
3-520	3-1000	>35	24

4.8 RESIDUAL AM TEST

SPECIFICATION

>65 dB below carrier in a 50 Hz to 15 kHz post-detection bandwidth.

METHOD

A modulation meter operating in AM mode is used to demodulate the Signal Generator output at the minimum leveler point where AM noise is maximum. A distortion analyzer (operating in level mode) is used to increase the resolution of the demodulated output of the modulation meter. The system is calibrated at a 10% AM level. The 10% AM is removed and the residual AM is read in dB below the calibrated 10% AM level. 20 dB is added to the reading to relate the residual AM to the carrier.

EQUIPMENT

Modulation Meter Radiometer AFM2

Distortion Analyzer HP334A

PROCEDURE

1. Set the Signal Generator controls as follows:

FREQUENCY selector	500.000 MHz
MODULATION MODE	AM
MODULATION FREQ	1 kHz
MODULATION FM/AM	0% AM
OUTPUT VERNIER	-7 dBm reading on OUTPUT meter
OUTPUT step attenuator	0 dBm

2. Connect the equipment as shown in Figure 4-2.

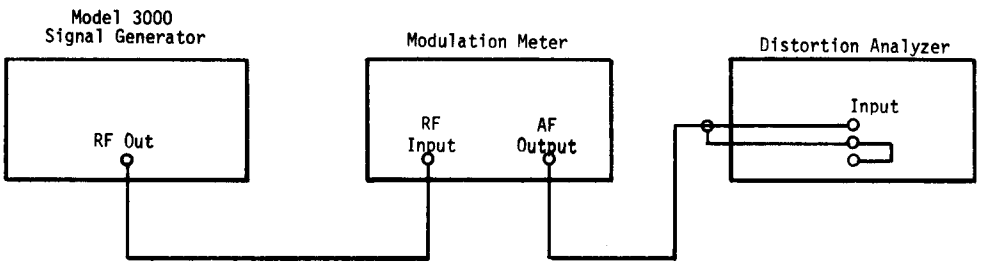

Figure 4-2. Residual AM Setup

3. Set the modulation meter to read %AM at 500 MHz. Set the RF input attenuation to 10 dB, the IF bandwidth to ±400 kHz, the meter response to fast, the function switch to +AM, the meter range switch to 10 and the filter bandwidth to 50 Hz-15 kHz.

4. Adjust the Signal Generator MODULATION FM/AM control for a modulation meter reading of 10% AM. NOTE: 10% AM is obtained at a full-scale reading of 100 with the modulation meter range switch set to 10.

5. With the distortion analyzer operating in level mode, calibrate it for a 0 dB panel-meter reading. The system is now calibrated at a reference level 20 dB below the carrier. Since the modulating signal and carrier amplitudes are equal at 100% AM, it follows that at 10% AM the modulating signal is 20 dB below the carrier.

6. Set the Signal Generator MODULATION MODE switch to "EXT".

7. Without disturbing the Signal Generator and modulation meter controls, set the distortion analyzer to read residual AM. Set the range switch so that the panel meter reads between 0 and -10 dB. First, read the residual AM below the 0 dB reference level in step 5. Then add 20 dB to the above reading to obtain the residual AM below the carrier. (For example, a 48 dB residual AM below the 0 dB reference +20 dB = 68 dB residual AM below the carrier.) The residual AM should be >65 dB below the carrier. Record the residual AM in dB below the carrier on line 25 of the PTR.

As many other carrier frequencies may be tested as desired.

4.9 RESIDUAL FM TEST

SPECIFICATION

<200 Hz in a 50 Hz to 15 kHz post-detection bandwidth. (Typ 100 Hz.) <100 Hz in a 300 Hz to 3 kHz post-detection bandwidth. (Typ 50 Hz.)

METHOD

A modulation meter which is set to read frequency deviation is used to measure residual FM. The test is performed at maximum frequency and output level. The Signal Generator is operated in an FM mode where the residual FM is greatest.

The residual FM is measured in an environment where the noise level <60 dB relative to 2×10^{-4} µbar.

EQUIPMENT

Modulation Meter	Radiometer AFM2

PROCEDURE

1. Set the Signal Generator controls as follows:

FREQUENCY selector	520.000 MHz
MODULATION MODE	FMx100
MODULATION FREQ	EXT
MODULATION FM/AM	0 kHz
OUTPUT VERNIER	Fully Clockwise
OUTPUT step attenuator	+10 dBm

2. Connect the Signal Generator RF out connector to the 50 ohm RF input of the modulation meter.

3. Set the modulation meter to read FM deviation at 520 MHz. Set the meter range switch to 3, the RF input attenuation to 20 dB, the IF bandwidth to ±400 kHz, the meter response to fast and the filter bandwidth to 50 Hz-15 kHz.

4. Measure the average level of the FM deviation on the modulation meter and disregard occasional peaks. The residual FM should be <200 Hz. Read the residual FM on the panel meter with the function switch set to +FM and then -FM positions. Record the greater of the two readings in Hz on line 26 of the PTR.

As many other frequencies may be tested as desired.

4.10 INTERNAL MODULATION FREQUENCY TEST

SPECIFICATION

Amplitude & Frequency Modulation	
Internal	400 Hz and 1 kHz ±5%

METHOD

A frequency counter is used to measure modulation frequency at the rear-panel modulation test point of the Signal Generator. Since the internal 400 Hz and 1 kHz oscillators are used for both the AM and FM modes, this test will suffice for both modes.

EQUIPMENT

Frequency Counter	HP5300B/5303B

PROCEDURE

1. Set the Signal Generator controls as follows

FREQUENCY selector	N/A (not applicable to this test)
MODULATION MODE	N/A
MODULATION FREQ	400 Hz
MODULATION FM/AM	Mid-range
OUTPUT VERNIER	N/A
OUTPUT step attenuator	N/A

2. Connect the low frequency input of the frequency counter to the rear-panel MODULATION T.P. of the Signal Generator. NOTE: Provide a ground connection between the Signal Generator and the counter.

3. The counter should read between 380 and 420 Hz. Record the counter reading on line 27 of the PTR.

4. Set the Signal Generator MODULATION FREQ control to 1 kHz.

5. The counter should read between 950 and 1050 Hz. Record the counter reading on line 28 of the PTR.

4.11 PERCENT AM ACCURACY TEST

SPECIFICATION

Accuracy: ±(5% of reading +5%) at a frequency of 1 kHz

This specification applies for output limits ≤+3 dBm. AM is possible above +3 dBm if the peak of the modulated output does not exceed +13 dBm.

METHOD

The %AM accuracy is measured with a modulation meter after the front-panel modulation FM/AM control error, which is ±4%, is subtracted out. The FM/AM control accuracy, which consists of the control linearity and the modulation scale errors, is measured in terms of the DC voltage at the rear panel modulation test point. The calibration of the voltage across the control at maximum position is checked initially.

The remaining %AM accuracy, which is ±(5% of the reading + 1% of full scale), is measured by the modulation meter with accurately measured voltage applied to the Signal Generator modulation system. The measurement uncertainty is 2% of the reading +1% of full scale.

EQUIPMENT

Modulation Meter: Radiometer AFM2

Digital Multimeter: Dana 4300

PROCEDURE

1. Set the Signal Generator controls as follows:

FREQUENCY selector	520.000 MHz
MODULATION MODE	CW
MODULATION FREQ	VERNIER
MODULATION FM/AM	0% AM
OUTPUT VERNIER	-3 dBm reading on OUTPUT meter
OUTPUT step attenuator	0 dBm

2. Connect the equipment as shown in Figure 4-3.

NOTE: Provide a ground connection between the Signal Generator and the digital multimeter.

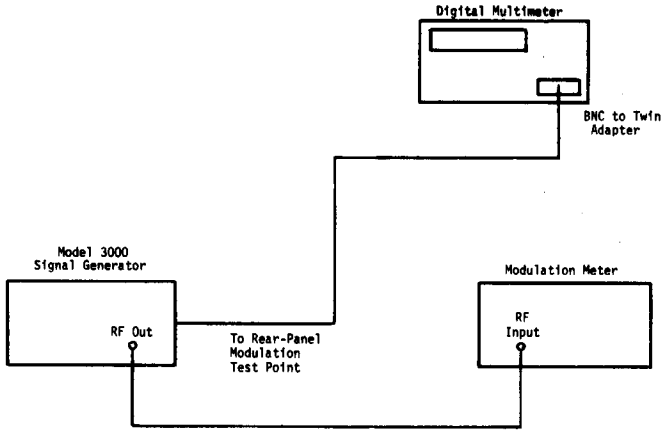

Figure 4-3. Percent AM Accuracy Setup

3. Adjust the Signal Generator MODULATION FM/AM control to its maximum up position.

4. The digital multimeter should read 5.000 ±0.020 volts DC. If the voltage is within limits, continue to step 5. If out of limits, the voltage should be recalibrated.

5. Adjust the Signal Generator MODULATION FM/AM control to 30% AM.

6. The digital multimeter should read between 1.300 and 1.700 volts DC. Record the reading on line 20 of the PTR.

7. Set the Signal Generator MODULATION FM/AM control to 90% AM.

8. The digital multimeter should read between 4.300 and 4.700 volts DC. Record the reading on line 30 of the PTR.

9. Adjust the Signal Generator MODULATION FM/AM control to 0% AM.

NOTE: This concludes the MODULATION FM/AM control accuracy test. As many other points may be tested as desired.

10. Set the modulation meter to read %AM at 520 MHz. Set the meter range switch to 100, the RF input attenuation to 10 dB, the IF bandwidth to ±400 Hz, the meter response to fast, the function switch to +AM and the filter bandwidth to 50 Hz-15 kHz.

11. Adjust the Signal Generator MODULATION FM/AM control for a reading of 1.500 ±0.003 volts DC on the digital multimeter. Set the MODULATION FREQ switch to 1 kHz and the MODULATION MODE switch to AM.

12. Make a note of the modulation meter reading in %AM. Set the modulation meter function switch to -AM, and note the modulation meter %AM reading as before. Compute the average of the two readings. The average %AM should be between 27.5 and 32.5%. Record the average %AM to the nearest 0.5% on line 31 of the PTR.

13. Set the Signal Generator MODULATION MODE switch to CW and the MODULATION FREQ switch to VERNIER.

14. Adjust the Signal Generator MODULATION FM/AM control for a reading of 4.500 ±0.003 volts DC on the digital multimeter. Set the MODULATION FREQ switch to 1 kHz and the MODULATION MODE switch to AM.

15. Make a note of the modulation meter reading in %AM. Set the modulation function switch to +AM and note the modulation meter %AM reading as before. Compute the average of the two readings. The average %AM should be between 84.5 and 95.5% AM. Record the average %AM to the nearest 0.5% on line 32 of the PTR.

NOTE: This concludes the modulation system accuracy test. As many other points may be tested as desired.

4.12 AM BANDWIDTH TEST

SPECIFICATION

Modulation Freq. External	DC to 20 kHz (±3 dB bandwidth)

METHOD

The measurement is made with a modulation meter operating in AM mode and a function generator. The function generator supplies an external sine wave to amplitude modulate the Signal Generator. The system is calibrated at -6 dB on the modulation meter dB scale (approximately 50% AM). The external modulation frequency is increased from 1 kHz to 20 kHz and the AM bandwidth is measured as the change in dB level from the calibration level.

EQUIPMENT

Modulation Meter	Radiometer AFM2
Function Generator	Wavetek 130
Oscilloscope	Tektronix D10/5A18N/5B10N

PROCEDURE

1. Set the Signal Generator controls as follows:

FREQUENCY selector	050.000 MHz
MODULATION MODE	AM
MODULATION FREQ	EXT
MODULATION FM/AM	0% AM
OUTPUT VERNIER	+3 dBm reading on OUTPUT meter
OUTPUT step attenuator	0 dBm

2. Connect the equipment as shown in Figure 4-4.

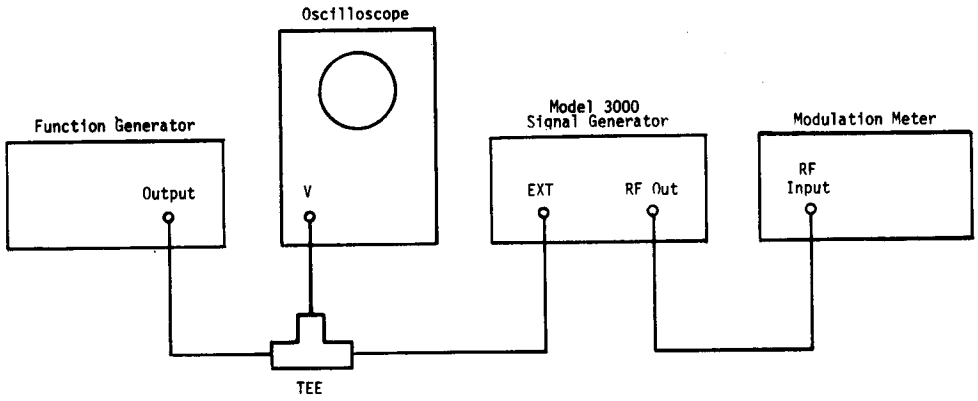

Figure 4-4. AM Bandwidth Setup

3. Set the modulation meter to read %AM at 50 MHz. Set the RF input attenuation to 20 dB, the IF bandwidth to ±400 kHz, the meter response to fast, the function switch to +AM, the meter range switch to 100 and the filter bandwidth to 75 kHz.

4. Set the function generator for a 1 kHz sine wave output and the attenuator controls for a 10 volt p-p sine wave on the oscilloscope.

5. Adjust the Signal Generator MODULATION FM/AM control for a modulation meter reading of -6 dB (approximately 50% AM).

6. Maintain the 10 volt p-p output level and increase the function generator frequency from 1 to 20 kHz. Observe the modulation meter scale. It should read between -3 and -9 dB. Note the change in dB from the -6 dB calibration level.

7. Repeat steps 4 through 6 with the modulation meter function switch set to -AM. Note the change in dB from the -6 dB setting as in step 6.

8. Record the larger of the two dB changes obtained in steps 6 and 7 on line 33 of the PTR.

4.13 AM DISTORTION TEST

SPECIFICATION

Distortion	<3% distortion to 70% AM (<5% to 90% AM) at a frequency of 1 kHz (Typ <1.5% to 30% AM)
	This specification applies for output limits ≤+3 dBm. AM is possible above +3 dBm if the peak of the modulated output does not exceed +13 dBm.
METHOD	The measurement is made with a modulation meter and a distortion analyzer, which measures the distortion of the demodulated AM from the modulation meter. The measurement is made at the minimum leveler point where the AM distortion is normally worst-case.

EQUIPMENT

Modulation Meter	Radiometer AFM2
Distortion Analyzer	HP334A

PROCEDURE

1. Set the Signal Generator controls as follows:

FREQUENCY selector	520.000 MHz
MODULATION MODE	AM
MODULATION FREQ	1 kHz
MODULATION FM/AM	0% AM
OUTPUT VERNIER	-7 dBm reading on OUTPUT meter
OUTPUT step attenuator	0 dBm

2. Connect the equipment as shown in Figure 4-5.

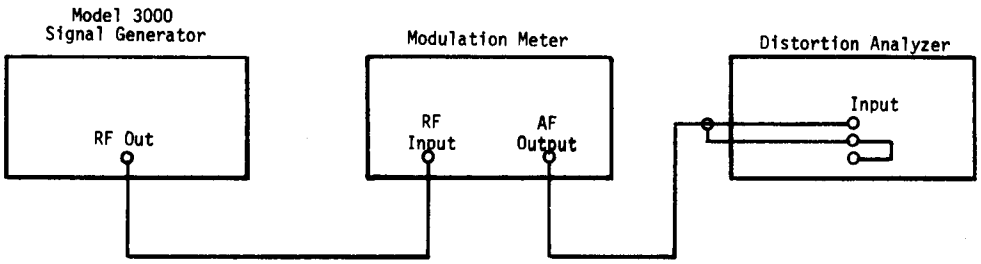

Figure 4-5. AM Distortion Setup

3. Set the modulation meter to read %AM at 520 MHz. Set the RF input attenuation to 10 dB, the IF bandwidth to ±400 kHz,

the meter response to fast, the function switch to +AM, the meter range switch to 100 and the filter bandwidth to 50 Hz to 15 kHz.

4. Adjust the Signal Generator MODULATION FM/AM control for a modulation meter reading of 70% AM. Set the modulation meter function switch to -AM, and observe the modulation meter reading. Readjust the MODULATION FM/AM control until the average of the two modulation meter readings in +AM and -AM positions of the modulation meter function switch is equal to 70% AM.

5. Calibrate the distortion analyzer and measure the distortion. The distortion should be less than 3%. Record the distortion on line 34 of the PTR.

6. Adjust the Signal Generator MODULATION FM/AM control as in step 4 until the average of the modulation meter readings in +AM and -AM positions of the modulation function switch is equal to 90% AM.

7. Calibrate the distortion analyzer and measure the distortion. The distortion should be less than 5%. Record the distortion on line 35 of the PTR.

4.14 FM DEVIATION ACCURACY TEST

SPECIFICATION

Deviation Accuracy	±250 Hz on FMx1 range ±35 kHz on FMx100 range

METHOD

The deviation is measured in both FM modes using an internal DC voltage equal to the peak of the internal sine wave voltages. A frequency counter is used to measure the maximum deviation in both FM modes.

EQUIPMENT

Frequency Counter	HP5300B/5303B

PROCEDURE

1. Set the Signal Generator controls as follows:

FREQUENCY selector	050.000 MHz
MODULATION MODE	FMx1
MODULATION FREQ	VERNIER
MODULATION FM/AM	5 kHz on FM scale
OUTPUT VERNIER	Fully Clockwise
OUTPUT step attenuator	+10 dBm

2. Connect the 50 ohm input of the frequency counter to the Signal Generator RF out connector.

3. Read the frequency counter and record the reading to 8 places on line 36 of the PTR.

4. Adjust the Signal Generator MODULATION FM/AM control to 0 kHz deviation on the FM scale.

5. Read the frequency counter and record the reading to 8 places on line 37 of the PTR.

6. Subtract the reading obtained in step 5 from the reading obtained in step 3. The difference between the two readings should be between 4.749 and 5.251 kHz. Record the difference in kHz on line 38 of the PTR.

7. Set the Signal Generator MODULATION MODE to FMx100 and adjust the MODULATION FM/AM control to 5 kHz deviation on the FM scale.

8. Read the frequency counter and record the reading to 6 places on line 39 of the PTR.

9. Adjust the Signal Generator MODULATION FM/AM control to 0 kHz deviation on the FM scale.

10. Read the frequency counter and record the reading to 6 places on line 40 of the PTR.

11. Subtract the reading obtained in step 10 from the reading obtained in step 8. The difference between the two readings should be between 464.9 and 535.1 kHz. Record the difference in kHz on line 41 of the PTR.

4.15 FM BANDWIDTH TEST

SPECIFICATION

Modulation Frequency	External, DC to >25 kHz (1 dB bandwidth)

METHOD

The measurement is made with a modulation meter and a function generator. The function generator supplies an external sine wave to frequency modulate the Signal Generator. The system is calibrated at 0 dB on the modulation meter dB scale (approximately 320 kHz deviation). The external modulation frequency is increased from 1 kHz to 25 kHz and FM bandwidth is measured as the change in dB level from the calibration level.

EQUIPMENT

Modulation Meter	Radiometer AFM2
Function Generator	Wavetek 130
Oscilloscope	Tektronix D10/5A18N/5B10N

PROCEDURE

1. Set the Signal Generator controls as follows:

FREQUENCY selector	520.000 MHz
MODULATION MODE	FMx100
MODULATION FREQ	EXT
MODULATION FM/AM	0 kHz
OUTPUT VERNIER	+3 dBm reading on OUTPUT meter
OUTPUT step attenuator	+10 dBm

2. Connect the equipment as shown in Figure 4-6.

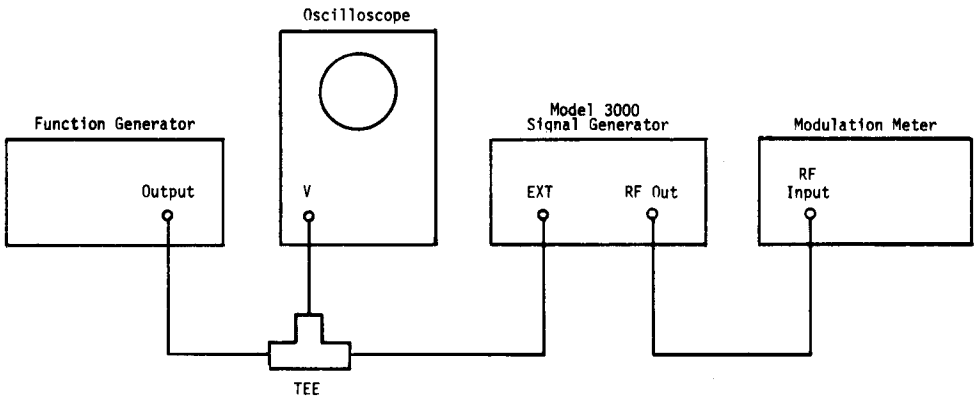

Figure 4-6. FM Bandwidth Setup

3. Set the modulation meter to read FM deviation at 520 MHz. Set the RF input attenuation to 20 dB, the IF bandwidth to ±400 kHz, the meter response to fast, the function switch to +FM, the meter range switch to 300 and the filter bandwidth to 75 kHz.

4. Set the function generator for a 1 kHz sine wave output and the attenuator controls for a 10 volt p-p sine wave on the oscilloscope.

5. Adjust the Signal Generator MODULATION FM/AM control for a modulation meter reading of 0 dB (approximately 320 kHz deviation).

6. Maintain the 10 volt p-p output level and slowly increase the function generator frequency from 1 to 25 kHz while observing the dB scale on the modulation meter. It should read between +1 and -1 dB. Note the maximum change from the 0 dB calibration level.

7. Repeat steps 4 through 6 with the modulation meter function switch set to -FM. Note the change from the 0 dB setting as in step 6.

8. Record the larger of the two dB changes obtained in steps 6 and 7 on line 42 of the PTR.

4.16 FM DISTORTION TEST

SPECIFICATION

Distortion	<4% (3 to 10 kHz deviation), <2% (10 to 500 kHz deviation) at a frequency of 1 kHz

METHOD

The measurement is made with a modulation meter and a distortion analyzer, which measures the distortion of the demodulated FM from the modulation meter. Distortion below 3 kHz deviation increases because of residual FM noise. The distortion at 3 kHz deviation is measured in an environment where the noise level <60 dB relative to 2×10^{-4} µbar.

EQUIPMENT

Modulation Meter	Radiometer AFM2
Distortion Analyzer	HP334A

PROCEDURE

1. Set the Signal Generator controls as follows:

FREQUENCY selector	520.000 MHz
MODULATION MODE	FMx1
MODULATION FREQ	1 kHz
MODULATION FM/AM	3 kHz
OUTPUT VERNIER	Fully Clockwise
OUTPUT step attenuator	+10 dBm

2. Connect the equipment as shown in Figure 4-7.

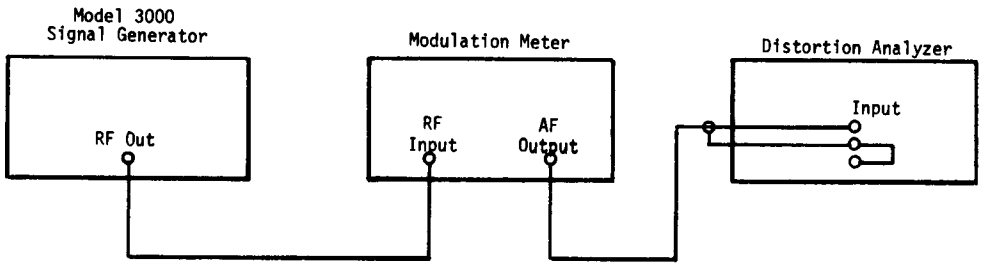

Figure 4-7. FM Distortion Setup

3. Set the modulation meter to read FM deviation at 520 MHz. Set the RF input attenuation to 20 dB, the IF bandwidth to ±400 kHz, the meter response to fast, the function switch to

+FM, the meter range switch to 3 and the filter bandwidth to 50 Hz-15 kHz. The modulation meter should read approximately 3 kHz.

4. Calibrate the distortion analyzer and measure distortion. The distortion should be less than 4%. Record the distortion on line 43 of the PTR.

5. Set the meter range switch of the modulation meter to 300. Set the Signal Generator MODULATION MODE to FMx100.

6. Adjust the Signal Generator MODULATION FM/AM for a reading of 300 kHz deviation on the modulation meter.

7. Calibrate the distortion analyzer and measure the distortion. The distortion should be less than 2%. Record the distortion on line 44 of the PTR.

4.17 IMPEDANCE TEST

SPECIFICATION

Impedance	50 ohm, VSWR 1.2 at RF output levels below 0.1 V.

METHOD

The measurement is made with a VSWR bridge and the return loss is displayed on a spectrum analyzer. An RF signal from a sweep/signal generator is fed to the input of the bridge. A reference level is established by shorting the bridge output port. The short is replaced by the RF impedance of the Signal Generator. The sweep/signal generator is tuned from 1 to 520 MHz and the return loss versus frequency is displayed.

EQUIPMENT

Spectrum Analyzer	HP8554L/8552B/141T
Sweep/Signal Generator	Wavetek 2001
VSWR Bridge	Wiltron 60N50
Coaxial Short, Type N Female	HP11511A

PROCEDURE

1. Set the Signal Generator controls as follows:

FREQUENCY selector	520.000 MHz
MODULATION MODE	CW
MODULATION FREQ	(Inactive)
MODULATION FM/AM	(Inactive)
OUTPUT VERNIER	+3 dBm reading on OUTPUT meter
OUTPUT step attenuator	-10 dBm

2. Use the setup in Figure 4-8. Connect the sweep/signal generator to the input port, the spectrum analyzer to the reflected output port and the coaxial short to the device-under-test port of the VSWR bridge.

3. Set the sweep/signal generator output level to -10 dBm, the mode to CW and the center frequency to 250 MHz.

4. Set the spectrum analyzer to span 0 to 500 MHz and the bandwidth to 300 kHz. Use the log reference level controls to calibrate the 250 MHz signal at the top line (0 dB reference) of the display graticule.

5. Disconnect the coaxial short and connect the device-under-test port of the VSWR bridge to the Signal Generator RF out connector. Use the sweep/signal generator center frequency control to tune from 1 to 520 MHz and verify that the signal level in the display is >21 dB below the 0 dB reference. Disregard the signal at 520 MHz. Record the reading in dB below the reference on line 45 of the PTR.

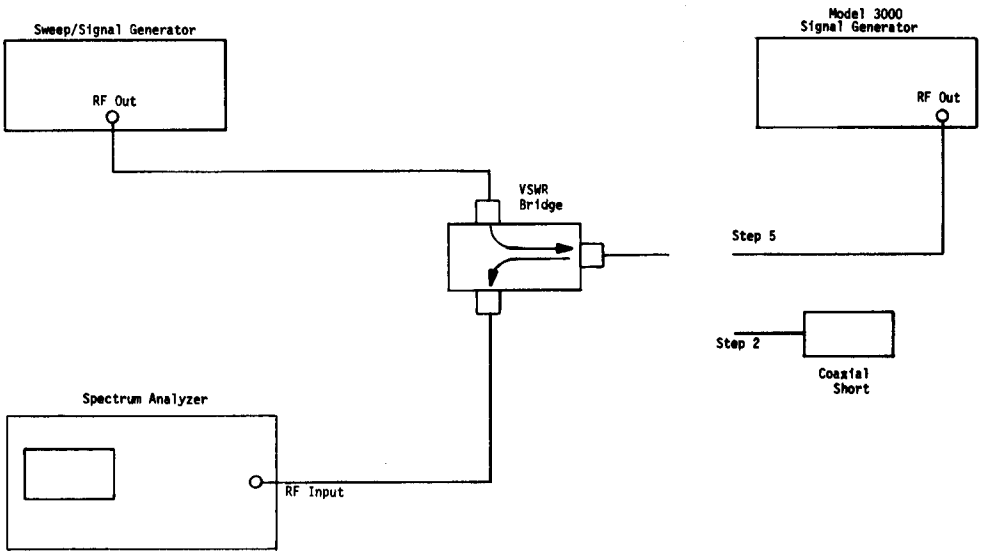

Figure 4-8. Test Setup

4.18 RFI TEST

SPECIFICATION

<1.0 μV is induced in a two-turn, one-inch diameter loop which is held one inch away from any surface. Loop feeds a 50 ohm receiver.

METHOD

A 50 ohm receiver consisting of a 26 dB amplifier and a spectrum analyzer are calibrated at a 1 μV level using the Signal Generator. A loop probe is then connected to the receiver and the leakage is measured at a one-inch distance from the external surfaces of the Signal Generator with the RF output terminated in 50 ohms. A screen room may be required for this measurement.

EQUIPMENT

Spectrum Analyzer	HP8544L/8552B/141T
Wideband Amplifier	HP3447D
50 ohm Load	HP11593A
Loop Probe	See Figure 4-9
Attenuator Pads (100 dB)	Weinschel 50-10, 50-20, 50-30, 50-40

PROCEDURE

1. Set the Signal Generator controls as follows:

FREQUENCY selector	500.000 MHz
MODULATION MODE	CW
MODULATION FREQ	(Inactive)
MODULATION FM/AM	(Inactive)
OUTPUT VERNIER	Set to +3 dBm on OUTPUT meter
OUTPUT step attenuator	-110 dBm

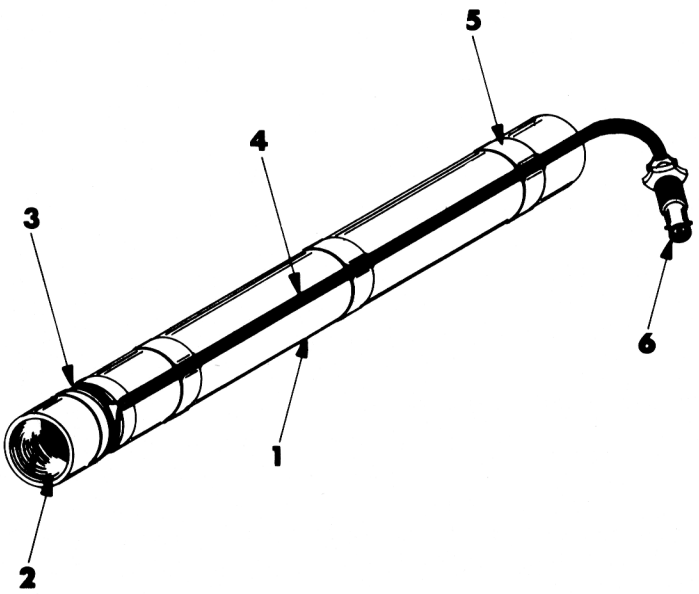

1. Rexolite Rod: 1.25 in. dia. by 11 in.
2. Hole: 1.00 in dia. by 0.80 in. deep.
3. Groove: 0.120 in wide by 0.125 in deep 1.00 in from end of rod.
4. Coaxial Cable: (RG-174/U) 0.110" diameter by 19" long. Strip shield for 7 in, and cut off shield to ¼ in length. Strip insulation from center conductor ¼ in. Wind 2 turns of insulated center conductor in groove of rod. Solder shield to center conductor, and insulate the solder joint.
5. Wind mylar tape around the two-turn loop, and around the rod (three places).
6. BNC male connector.

Figure 4-9. Loop Probe

2. Connect the equipment as shown in Figure 4-10.

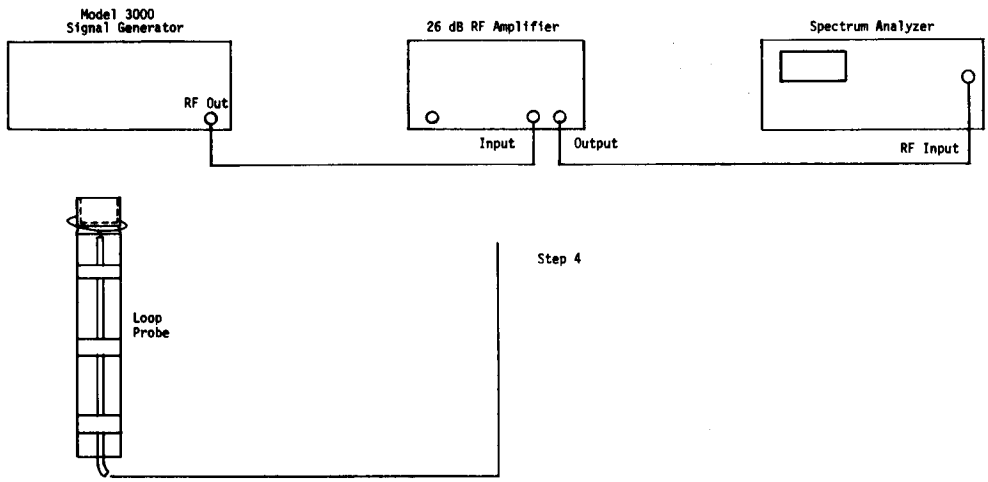

Figure 4-10. RF Leakage Setup

3. Set the spectrum analyzer bandwidth to 100 kHz, the scan width to 0.5 MHz/div, the video filter to 100 Hz, the input attenuation to 0 dB and the log reference level to -50 dBm with a 10 dB/div vertical scale. Center the signal in the display using the center frequency control. Calibrate the analyzer for the -107 dBm signal at the -31 dBm graticule using the log reference controls.

4. Disconnect the RF amplifier from the Signal Generator, and connect a 100 dB attenuator pad (10+20+30+40) to the RF out connector of the Signal Generator. Terminate the attenuator in a 50 ohm load.

5. Set the Signal Generator OUTPUT step attenuator to -10 dBm, and the OUTPUT VERNIER to a +3 dBm reading on the OUTPUT meter.

6. Connect the loop probe to the input of the RF amplifier. Move the loop probe over the surfaces of the Signal Generator with the two-turn loop at a one-inch distance. The signal plus noise should be less than the -107 dBm reference (step 2). Record the maximum reading in dBm on line 46 of the PTR.

PERFORMANCE TEST RECORD
MODEL 3000

S/N _____

DATE _____

SEC	TEST	MINIMUM SPECIFICATION	MEASUREMENT	MAXIMUM SPECIFICATION	LINE
4.2	FREQ RANGE		( ) CHECK		1
4.3	FREQ ACCURACY	39,999.60 kHz	kHz	40,000.40 kHz	2
		994.99 kHz	kHz	1,015.01 kHz	3
		1,454.99 kHz	kHz	1,545.01 kHz	4
4.4	FREQ STABILITY		Hz	104 Hz	5
			Hz	500 Hz	6
4.5.1	METER ACCURACY	-0.5 dB	dB	+0.5 dB	7
			dB		8
4.5.2	FLATNESS	-0.75 dB	dB	+0.75 dB	9
			dB		10
			dB		11
4.5.3	STEP ATT ACCURACY	-0.7 dB	dB	+0.7 dB	12
			dB		13
			dB		14
			dB		15
		-1.5 dB	dB	+1.5 dB	16
4.6	HARMONICS	26 dB down	dB		17
			dB		18
		30 dB down	dB		19
			dB		20
4.7	NON-HARMONICS	60 dB down	dB		21
		65 dB down	dB		22
		55 dB down	dB		23
		35 dB down	dB		24
4.8	RESIDUAL AM	65 dB down	dB		25
4.9	RESIDUAL FM		Hz	200 Hz	26
4.10	INT MOD FREQUENCY	380 Hz	Hz	420 Hz	27
		950 Hz	Hz	1050 Hz	28
4.11	FM/AM CONTROL ACC	1.300 VDC	VDC	1.700 VDC	29
		4.300 VDC	VDC	4.700 VDC	30
	AM SYSTEM ACCURACY	27.5 %	%	32.5 %	31
		84.5 %	%	95.5 %	32
4.12	AM BANDWIDTH		dB	3 dB	33
4.13	AM DISTORTION		%	3 %	34
			%	5 %	35
4.14	FM DEVIATION ACC		kHz		36
			kHz		37
		4.749 kHz	kHz	5.251 kHz	38
			kHz		39
			kHz		40
		464.9 kHz	kHz	535.1 kHz	41
4.15	FM BANDWIDTH		dB	1 dB	42
4.16	FM DISTORTION		%	4 %	43
			%	2 %	44
4.17	IMPEDANCE	21 dB down	dB		45
4.18	RFI		dBm	-107 dBm	46

SECTION 5
MAINTENANCE

5.1 INTRODUCTION

This section provides information for disassembling, calibrating and troubleshooting the Model 3000 Signal Generator.

Measurements and adjustments will be facilitated by placing instrument on its right side, as access is required to top and bottom of unit for adjustments and test points.

5.2 SERVICE INFORMATION

5.2.1 Disassembly Information

Refer to Figure 5-1. The side panels form part of the support for the top and bottom covers; therefore, these covers should be removed before removing either side panel. The covers and panels can be removed as indicated below. NOTE: One side panel must remain on the instrument to secure the front-panel assembly to the chassis.

REMOVAL OF BOTTOM COVER - Remove two rear feet (A) and lift cover off with a slight rear movement. Reinstall cover by reversing the removal procedure.

REMOVAL OF TOP COVER - Remove the single screw (B) from top and lift off cover with a slight rear movement. Reinstall cover by reversing the removal procedure.

REMOVAL OF FRONT TOP RAIL - The top rail may be removed to facilitate removal of the meter board assembly. The rail is removed by removing three screws (D) and lifting rail upward.

REMOVAL OF SIDE PANEL - Either side panel can be removed to provide better access by removing the six screws (E) holding side panel to the instrument.

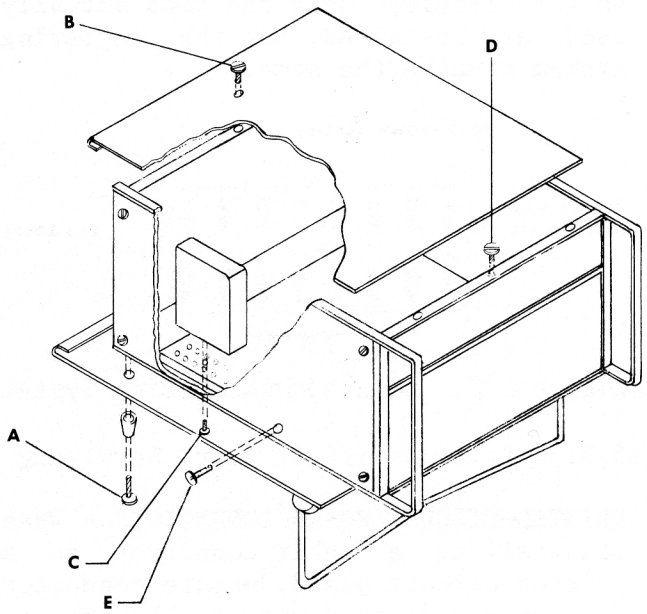

Figure 5-1. Disassembly

5.2.2 Module Servicing

REMOVAL OF MODULE - Modules may be removed by removing any cables attached to top of the module and removing hold-down screw (C) from bottom. Rock module slightly while lifting upward to free module from chassis socket.

REINSTALLING MODULE - Before installing the module, check that module pins are straight and properly aligned; then, carefully seat module pins into the chassis socket, replace module hold-down screw (C) to insure a good ground connection between module and chassis, and replace any cables attached to top of module. Module-cable connections are shown in Figure 5-6. NOTE: If a module

is replaced with a new module, it will be necessary to calibrate the phase-locked loop or other circuits involved. See Calibration Procedure in this section.

MODULE-PIN NUMBERING SYSTEM - The module pins are numbered as shown in Figure 5-2. The off-center index stud prevents the module's being plugged in backward and also provides a method for locating pin #1. NOTE: All 16 pins are not required in each module; only the pins actually used are installed, but the numbering system remains the same.

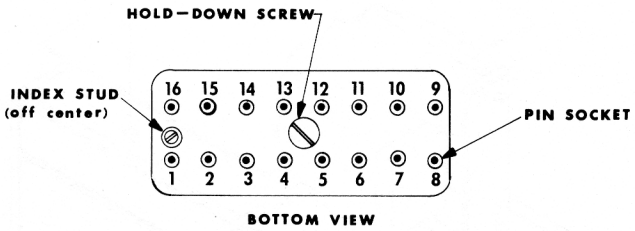

Figure 5-2. Module Pin Numbering System

5.2.3 Printed-Circuit Board Servicing

PRINTED-CIRCUIT BOARD CONNECTORS - When reinstalling a cable connector on a printed-circuit board, be sure connector is properly aligned with the board connector pins and that connector faces proper direction (See Figure 5-3). CAUTION: Failure to properly orientate the connector can result in damage to modules or power supply.

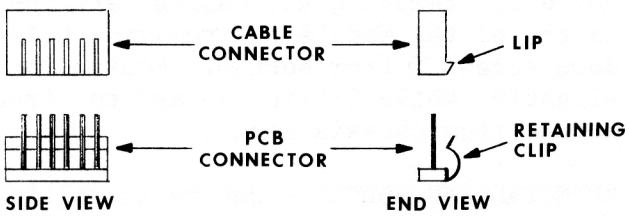

Figure 5-3. Connector Alignment

METER-BOARD (C315) REMOVAL - Removal of the meter-board assembly requires that the attenuator dial, VERNIER knob and potentiometer retaining nut and front top rail be removed. The meter board is secured to front panel by three screws - one through front panel (behind attenuator dial) and one at each top corner of meter board. Remove these three screws and disengage six-pin connector from meter board. Remove three slip-on wire connectors from attenuator switch. The meter-board assembly can then be moved toward rear until the VERNIER potentiometer shaft, UNLEVELED LED and meter case clear the front panel; then the board can be lifted from instrument.

The meter board is reinstalled by reversing the removal procedure. NOTE: When installing the meter board, use care not to damage the UNLEVELED Lamp.

MODULATION BOARD (C316) REMOVAL - The modulation-board assembly can be removed by the following procedure: Disengage the slip-on connectors from the six BCD FREQUENCY switches; remove the black spring-loaded knobs from the MODULATION MODE and FREQ switches; remove retaining nut from EXT modulation BNC connector; disengage nine-pin connector from modulation board; and remove one screw at each top corner of modulation board. The board assembly can then be moved toward rear until switch levers clear the front panel; then, the assembly may be lifted from instrument.

The board assembly is reinstalled by reversing the removal procedure. NOTE: When placing connectors on FREQUENCY switches, be sure each connector is on correct switch, switch cables break out of main harness in same order that switches appear.

POWER SUPPLY BOARD REMOVAL - The Power Supply board and heatsink can be removed by removing the four screws which secure the printed circuit board to the instrument rear panel. After removal of the connecting harnesses, the board can be carefully lifted from the instrument.

CAUTION

The Power Supply board may be raised far enough to allow checking of many components with the harnesses still connected; however, power must NOT be applied to the instrument unless the negative (ground) side of C10 is connected to the instrument chassis ground, and to the positive (ground) side of C9 (jumper wires are sufficient).

The Power Supply board is reinstalled by reversing the removal procedure.

TABLE 5-1. RECOMMENDED TEST EQUIPMENT

INSTRUMENT	CRITICAL REQUIREMENT	RECOMMENDED
Digital Voltmeter	.04% Accuracy	Keithley 179
Oscilloscope	DC and AC coupled At least 50 mV/cm sensitivity High frequency - at least 10 MHz	Tektronix 5400
Power Meter	10-520 MHz Frequency Range -10 dBm to +15 dBm Power Range	HP Model 435A with Model 8481A Power Sensor
Frequency Counter		HP Model 5303B
Spectrum Analyzer		HP Model 8558B

5.3 CALIBRATION PROCEDURE

Remove the instrument top cover, the bottom cover, and the M172 module cover. The M172 module can be located by reference to Figure 5-6; then remove screw from top of module and slide cover off. Allow a two-hour warmup period before calibrating.

In general, calibration should be performed in the sequence given. Refer to Figures 5-4, 5-5 and 5-6 for test point and adjustment locations. NOTE: All measurements are made with reference to chassis ground.

5.3.1 +18 Volt Adjustment

+18.00

Connect digital voltmeter to orange +18 volt line on pin 3 of module M30 and set +18 V ADJ. on power supply to produce +18.00 V. (See Figures 5-5 and 5-6).

5.3.2 -18 Volt Adjustment -18.01

Connect digital voltmeter to yellow -18 volt line on pin 4 of module M30 and set -18 V ADJ on power supply for -18.00 V.

NO -18V adjust

5.3.3 +7.3 Volt Check

+7.34V

Connect digital voltmeter to green +7.3 volt line on pin 2 of module M30. The reading must be +7.3 V ±100 mV.

5.3.4 Crystal-Frequency Adjustment Module M30

Connect frequency counter having 50 ohm input to the Model 3000 RF OUT connector. Set the signal generator FREQUENCY switches to a high frequency which is within the counter's range, such as 500.000 MHz. Set front panel controls as follows: MODE to CW, FREQ to EXT, AM/FM Vernier at minimum, OUTPUT dial at +10 dBm and VERNIER Maximum clockwise.

Adjust M30 FREQUENCY ADJUST trimmer (Figure 5-5) for minimum frequency indication on counter; then, carefully turn FREQUENCY ADJUST trimmer clockwise until counter indicates the frequency selected by FREQUENCY switches. Disconnect counter from RF OUT connector. A final frequency check will be covered in paragraph 5.3.11.

5.3.5 PHASE-LOCKED LOOP #1 ADJUSTMENT M31A

No adjustment of module M31A is necessary.

5.3.6 PHASE-LOCKED LOOP #2 ADJUSTMENT M32A

See Figure 5-5 for location of M32A test points and Figure 5-6 for adjustment controls. Set frequency to 200.000 MHz and other front-panel controls as in Section 5.3.4. Connect digital voltmeter to M32A pin 14, and carefully adjust both M30-1 trimmers (A and B) to produce a minimum reading on voltmeter. This voltage should be between +0.5 V and +3.0 VDC. Set frequency to 239.000 MHz, and note that voltmeter reading is still within above limits.

0.79V

Set frequency to 200.000 MHz and connect scope vertical input (DC, 1 V/cm) to M32A pin 15. Adjust M32A control (A) for a 0 V scope indication. Set frequency to 239.000 MHz, and adjust M32A control (B) to again produce a 0 V scope indication.

Change for M32
① Adjust A for -2V @ 200MHz
② Adjust B for -1V @ 239MHz
pin 14 of M32 0.55 to 1.5V. If higher, find xtal oscillator (M30), 2 copper strips in left corner. Turn as monitor pin 14 to get lowest dc voltage. (1440MHz adjusted for max. output at minimum output - very sharp) f=200MHz

0.79V

5.3.7 Phase-Locked Loop #3 Adjustment

P.L.L. #3 consists of two modules: The M33 and the M9W. The test point is on module M33 (Figure 5-5), while the adjustment controls are on module M9W (Figure 5-6). Set FREQUENCY to 250 MHz, and other front panel controls as in Section 5.3.4. Connect scope vertical input (DC, 1 V/cm) to M33 pin 5. Adjust M9W control (D) for a 0 V scope indication.

Set front-panel controls as follows: MODE to FMx100, FREQ to 1 kHz and AM/FM Vernier at maximum. Set scope vertical input (on M33 pin 5) for AC, 50 mV/cm. Adjust M9W control (C) for minimum (null) indication of 1 kHz sine wave on scope. Set FREQ to 400 Hz and note that scope presentation is a 400 Hz sine wave.

5.3.8 Phase-Locked Loop #4 Adjustment

Calibration of P.L.L. #4 involves three modules: M172, M9W and the M34. Test points are located on modules M2M and M34 (Figure 5-5), while adjustment controls are located on modules M172 and M9W (Figures 5-4 and 5-6).

Set FREQUENCY switches for 250.000 MHz and other front panel controls as in Section 5.3.4. Connect digital voltmeter to M172 pin 3; then, adjust M172 250 MHz control (Figure 5-4) for a 0.00 V reading on voltmeter. The voltmeter may now be disconnected.

Connect frequency counter to RF OUT connector and connect scope vertical input (DC, 1 V/cm) to M34 pin 8. Adjust M9W control (A) for 0 V on scope. The counter should indicate a frequency of 250 MHz. NOTE: Due to the way the M34 locks on harmonics of 40 MHz, it is possible to adjust M9W control (A) for "0 V" at multiples of 40 MHz offset from 250 MHz. If this happens, it will be necessary to readjust M9W control (A) several turns to break lock and relock at the next multiple of 40 MHz until "0 V" can be obtained with a 250 MHz counter reading.

use M2M pots instead of 172

5.3.8

① Pin 6 of M22. Look for neg. voltage. Decrease 0.1 V DC for every 10 MHz increase in freq. (Adjust for 0 to -5.2 V drive)

② Pin 2 of M9W: Adjust 250 MHz Pot in M2M for 0.00 V
Pin 8 of M34: Adjust (A) of M9W for 0 volts @ 250 MHz
" " " : Adjust 300 MHz Pot in M2M for 0 volts

③ Pin 8 of M34: 300 MHz, 350, 400, 450, 510 (adjust for 0 volts) } on M2M

④ " " 100, 50, 1

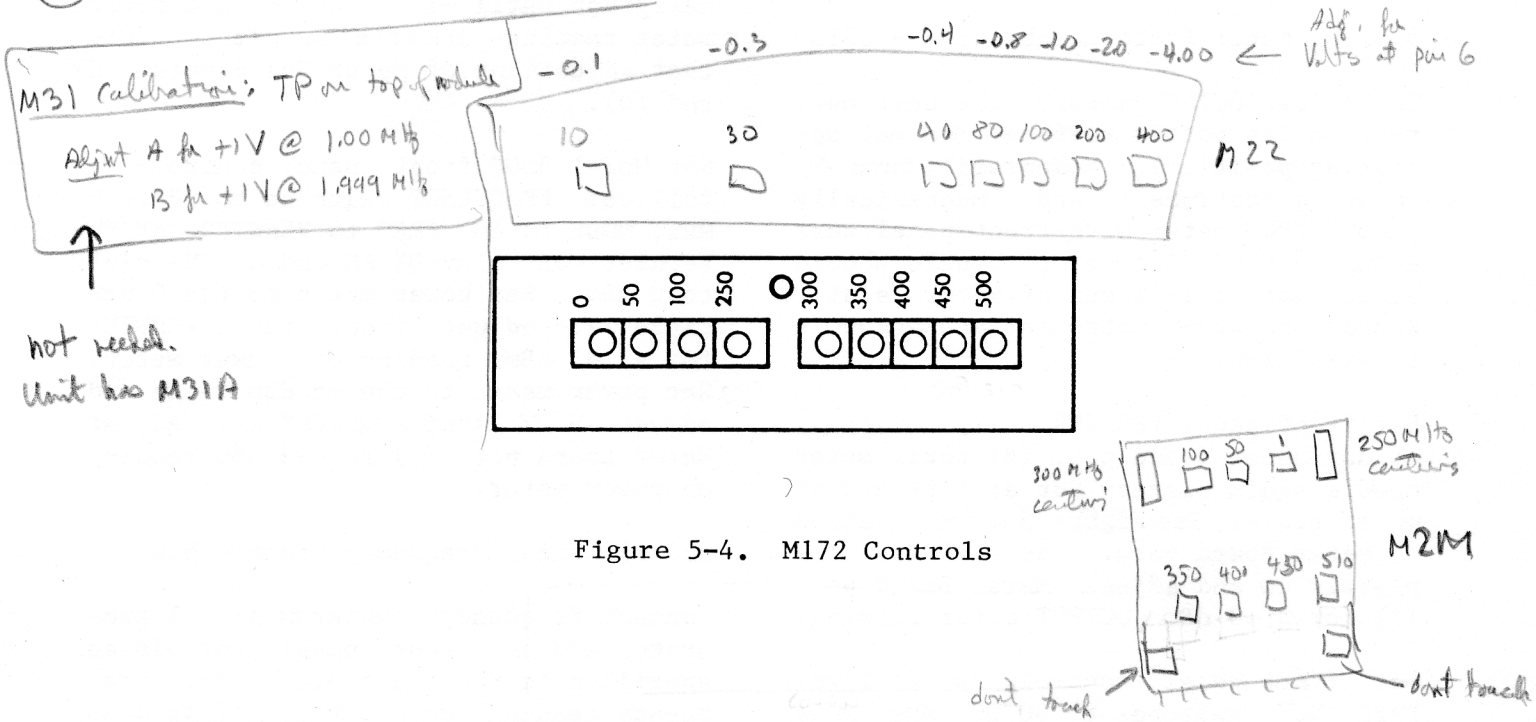

Figure 5-4. M172 Controls

Set FREQUENCY switches for 300 MHz and adjust M172 300 MHz pot. for 0 V on scope and a counter reading of 300 MHz. Repeat this step, using applicable M172 pots., for frequencies of 350, 400 and 450 MHz. Refer to Figure 5-4 for M172 pot. locations.

Set FREQUENCY switches to 500 MHz. Adjust M172 500 MHz pot. for a scope reading near 0 V. Increase FREQUENCY to 520 MHz and note scope indication; then, adjust 500 MHz pot. to give scope indications at 500 and 520 MHz that are symmetrical about 0 V. Recheck 450 MHz and adjust 450 MHz pot. for 0 V on scope. Recheck 500 and 520 MHz; adjust 500 MHz pot. as indicated above.

510 MHz 0.V

Set FREQUENCY to 100 MHz and adjust M172 100 MHz pot. for 0 V on scope and a counter reading of 100 MHz. Repeat using appropriate M172 pots., for 50 MHz and 0 MHz. Repeat this step until 0 V is obtained on scope at 100, 50 and 0 MHz.

Connect digital voltmeter to M34 pin 14. Step through frequency range from 1 MHz to 520 MHz in 10 MHz steps to find frequency having highest leveler voltage; then adjust M9W control (B) for +1.0 VDC at this frequency setting.

5.3.9 AM/FM Vernier Voltage Adjustment C316

NOTE: The Modulation Board (C316) contains a SIZE ADJ pot. (C) and a BALANCE ADJ pot. (D) which are factory adjustments. DO NOT change setting of these two controls.

Connect digital voltmeter to chassis MOD T.P. Set FREQ switch to VERNIER and AM/FM Vernier control to maximum. Refer to Figure 5-6 for control location and adjust modulation board pot. (A) for a +5.00 V reading on voltmeter. Set AM/FM Vernier to 0% AM; the voltmeter should indicate 0 V ±20 mV.

5.3.10 Meter Board Calibration - C315

To adjust OUTPUT meter, the unit must rest on its bottom surface (normal operating position). Momentarily turn OFF power to instrument and mechanically zero OUTPUT meter with front-panel zero adjust screw. The meter needle should bisect dot at left end of meter scale. Restore power to instrument and allow it to stabilize.

Set front panel VERNIER fully ccw; then, adjust Meter Board pot. (B) until meter needle again bisects dot at left end of meter scale. See Figure 5-6 for location of Meter Board pots. Set VERNIER completely cw and adjust Meter Board pot. (A) for a +3 dBm OUTPUT meter reading.

Set front panel controls as follows: FREQUENCY switches to 50.000 MHz, MODE to CW, VERNIER completely cw and OUTPUT dial to +10 dBm. Calibrate power meter and its thermistor or power sensor. Set power meter to the +15 dBm range; then connect thermistor or sensor to RF OUT connector of Model 3000.

Adjust Meter Board pot. (F) for a +13 dBm power meter reading. Set front panel VERNIER for -7 dBm reading on OUTPUT meter and set power meter to the +5 dBm range. Adjust Meter Board pot. (E) for +3 dBm power meter reading. Again set power meter to the +15 dBm range and turn front panel VERNIER fully cw. Repeat this paragraph until +13 dBm and +3 dBm power meter readings are obtained without further adjustment of Meter Board pots. (E) and (F).

Set OUTPUT dial to 0 dBm and power meter to the +5 dBm range. With VERNIER completely cw, adjust Meter Board pot. (C) for a +3 dBm power meter reading. Turn VERNIER for -6 dBm reading on OUTPUT meter and set power meter to the -5 dBm range. Adjust Meter Board pot. (D) for -6 dBm power meter reading. Repeat this paragraph until +3 dBm and -6 dBm power meter readings are obtained without further adjustment of Meter Board pots. (C) and (D).

Set Model 3000 front panel controls as follows: FREQUENCY switches to 520.000 MHz, MODE to AM, FREQ to VERNIER, AM/FM Vernier control to 0% AM and OUTPUT dial to 0 dBm. Set power meter to the 0 dBm range and adjust front panel VERNIER for a -3 dBm reading on power meter. Set power meter to the +5 dBm range and adjust AM/FM Vernier to 100% AM. Adjust Meter Board pot. (G) for +3 dBm reading on power meter.

5.3.11 Final Frequency Check - M30

Connect frequency counter to signal generator and set front panel controls as specified in Section 5.3.4. Note frequency reading on counter; if it does not agree with the selected FREQUENCY within accuracy specifications, very carefully adjust M30 FREQUENCY ADJUST trimmer (See Figure 5-5) until desired frequency is obtained.

5.3.12 FM Reference Adjustment - M29-1

See Figure 5-6 for location of M29-1 adjustments. Connect frequency counter to front panel RF OUT connector; then set other front panel controls as follows: FREQUENCY to 40.000 MHz, MODE to CW, FREQ to VERNIER, AM/FM Vernier at minimum, VERNIER fully cw and OUTPUT dial at +10 dBm. Record the CW frequency shown on frequency counter.

Modulation TP (back panel): ① max modulation, Vernier, CW: Adjust (A) on modulation for +5 VDC
② 400 Hz & 1 kHz: (D) adjust to 0 volts (removes DC offset)
③ Sw. to vernier; decrease mod. level from +5 to 4.5 VDC, go to 1 kHz, adj (C) to 3.181 VRMS (1 kHz)
④ 400 Hz same level (3.181) ± 10 mV. (Balance int. modulation)

Set MODE to FMx1 and adjust M29-1 control (B) to produce an output frequency that is approximately 100 Hz above the CW frequency. Increase AM/FM Vernier to maximum and adjust Modulation Board control (B) to increase frequency counter reading by 5 kHz.

Set MODE to FMx100 and AM/FM Vernier to maximum. Adjust M29-1 control (A) for a frequency counter reading of 40.500 MHz ±10 kHz.

5.4 TROUBLESHOOTING

Troubleshooting is generally a systematic procedure of "divide and conquer". A thorough understanding of the block diagrams and circuit description located in Section 3 of this manual will enable the trouble symptom to be localized to a particular module or PC board. Once this has been accomplished the module or board can be replaced, or repaired with the aid of the proper schematic. In general, it is preferable to replace the module or PC-board assembly.

The front-panel ACCURACY lamps together with the four internal module "unlock indicator" lamps aid in troubleshooting phase-locked loop problems. One module in each loop contains an indicator lamp which lights to indicate when that loop is unlocked. The lamps indicate only which loops are unlocked, but not which module is at fault.

A problem in a power supply may cause many symptoms pointing to other areas and should be checked when the symptom does not clearly indicate a specific problem. The loss of the -18 V supply, for example, will cause the ACCURACY lamp to flash; while loss of the +18 V supply will extinguish all lamps. The +18, -18 and +7.3 V supplies comprise the DPS2 power supply which forms the rear panel of the instrument. Performance of these supplies is indicated in the CALIBRATION PROCEDURE.

For troubleshooting purposes, it is permissible to operate the Model 3000 with any of the plug-in modules or RF cables removed; however, the instrument should be turned off when removing or installing modules. If substitute modules are available, possibly from another Model 3000, this provides an easy method of verifying if a suspected module is defective.

RF cables can be disconnected from the module output connectors; then a power meter or spectrum analyzer can be connected directly to the module connector for power level or frequency measurements. Fabrication of a short coax adapter cable, terminated in a mating connector for the modules on one end and a BNC connector on the other, will facilitate connection of test equipment.

Before engaging in a troubleshooting procedure, be sure front-panel controls are set in proper operating position. Make a thorough visual inspection of the instrument for such obvious defects as loose or missing screws, broken wires, defective module-pin sockets, loose RF cables and burned or broken components.

5.4.1 Troubleshooting Hints

The following is a list of several typical symptoms followed by the probable cause(s) or a troubleshooting procedure. It is assumed the instrument has been properly calibrated previously, and that a warmup period will precede troubleshooting.

INTERMITTENT OPERATION - Defective module-pin sockets or loose RF cables.

LOW RF OUTPUT (+10 dBm RANGE) - If power is 10 dB low on this range but is correct on the 0 dBm range, Meter Board micro switch S1 is probably not being actuated by attenuator shaft.

LOW OR NO RF OUTPUT (ANY RANGE) - Defective attenuator or RF cables connecting to input or output of attenuator, defective meter board, defective module M10W or M9W. Check voltage on pin 15 of module M10W. The voltage should be approx-

imately as follows: -2.5 VDC on +10 dBm range with VERNIER fully clockwise; -0.7 VDC on 0 dBm range with VERNIER fully clockwise. These voltages indicate proper operation of the meter board; while other values, particularly positive voltages, indicate a defective IC on the meter board. Next, check RF power directly at M10W output. If it is correct, the trouble lies in the attenuator or its RF cables. If module M10W output is low, measure RF level directly at module M9W output - this should be approximately -10 to -11 dBm. If this level is correct, module M10W is defective; while if the level is low, Sweep Oscillator M9W is defective.

OUTPUT METER DOES NOT MOVE - If meter is pegged at either end of scale, the trouble is probably a defective meter-driver IC on meter board (C315). If meter remains at mechanical zero, meter movement may be open or a meter-board IC is defective.

UNLEVELED LAMP ON - RF OUT connector not terminated in 50-ohm load, AM percentage set so that peak of modulated output exceeds +13 dBm, defective module M10W, defective attenuator or connecting RF cables.

Connect power meter directly to M10W output. Set OUTPUT dial and VERNIER for a +13 dBm reading on power meter at 50.000 MHz. Step through frequency range from 10 to 520 MHz in 10 MHz steps. A power meter reading of +13 dBm ±0.5 dB with UNLEVELED lamp OFF indicates proper operation of module M10W. Connect power meter directly to attenuator output and repeat above steps. If attenuator output is correct, trouble is due to a defective RF cable or possibly a poor ground connection at RF OUT connector. If output is correct at M10W but the UNLEVELED lamp is ON, the trouble is probably a defective lamp-driver circuit in module M10W.

ACCURACY LAMPS FLASH CONTINUOUSLY - A steady light in CW mode but flashing lights in FM modes indicate a defective M29-1 or M33 module. If ACCURACY lamps flash in all modes, one or more of the phase-locked loops is open; see PHASE-LOCKED LOOP TROUBLES below. NOTE: Above the normal frequency range of the instrument (in the vicinity of 560 MHz), it is normal for phase-locked loop #4 to unlock causing the lamps to flash.

PHASE-LOCKED LOOP TROUBLES - An open or unlocked loop, indicated by a lighted module lamp, can be caused by a number of factors, including: low AC-input voltage, low DC-supply voltages, improper phase-locked loop DC voltages, an open or shorted RF cable or a defective module.

A defective RF cable or module can have a chain-reaction effect that causes two or more loops to unlock. For example, loss of the 1 kHz signal to module M31 will cause PLL #1 to unlock; thus, module M31 may not supply a proper signal to module M34, causing PLL #4 to unlock. Failure of the 40 MHz crystal oscillator in module M30 will cause all four loops to unlock, since all six reference frequencies will be lost.

Table 5-2 lists typical RF signal-input levels for each of the phase-locked loops. Those signals having a TTL level or 1 V level may be measured with a high-frequency oscilloscope; the other signals are best measured with a spectrum analyzer. NOTE: The TTL waveform shown in Table 5-2 is for illustration of voltage values only, and does not necessarily represent the observed waveshape.

Phase-Locked Loop #1 - Unlocking of this loop may be caused by a defective module M31, module M30 or RF cable connecting M30 to M31.

If M31A unlock indicator is on, check 1 kHz signal as listed in Table 5-2. If 1 kHz signal is correct, module M30 is operating properly, then check RF cable between M30 and M31A. If proper 1 kHz signal is being applied to M31A, check for 7.3 V on pin 6, +18 V on pin 7, and -18 V on pin 8 of M31A. If input signal

and DC voltages are correct, module M31A is defective.

Phase-Locked Loop #2 - Unlocking of loop #2 can be caused by defective modules M172, M30, M32 or RF cables connecting M30 to M32.

Connect digital voltmeter to M32 pin 11 and observe voltmeter reading while stepping through frequency range from 200 to 239 MHz in 1 MHz steps. The voltmeter reading should change -0.2 V per MHz from 0 V at 200 MHz to -7.8 V at 239 MHz. These voltages indicate proper operation of module M172.

Module M30 can be checked by measuring the 1 MHz and 1440 MHz signals directly at the M30. The levels specified in Table 5-2 indicate proper operation of module M30. If the M30 outputs are correct, the trouble lies in module M32 or the RF cables.

Phase-Locked Loop #3 - Unlocking of this loop in CW mode can be caused by defective modules M9W, M30, M33 or connecting RF cables. In addition, unlocking in FM modes can be caused by a defective module M29-1.

The M9W can be checked by measuring the 1198 MHz narrow oscillator signal directly at module M9W. The level specified in Table 5-2 indicates proper operation of the M9W.

Measure the 1200 MHz (120 comb) and 2 MHz signals directly at module M30. Proper operation of the M30 is indicated by the signal levels specified in Table 5-2.

Set MODE switch to FMx1, FREQ at VERNIER and AM/FM Vernier at maximum. Measure 1.5 to 2.5 MHz signal (exact frequency is dependent upon setting of AM/FM Vernier) directly at module M29-1. If signal level is as specified in Table 5-2, proper operation of module M29-1 is indicated.

If input signals to module M33 from modules M9W, M30 and M29-1 are correct, the trouble is in module M33 or its connecting RF cables.

Phase-Locked Loop #4 - Unlocking of loop #4 may, under certain conditions, be caused by problems originating in the other loops. Therefore, loops #1, 2 and 3 should be operating properly before troubleshooting loop #4.

Unlocking of loop #4 can be caused by defective modules M172, M9W, M30, M31, M32, M34 or connecting RF cables.

Connect digital voltmeter to M172 pin 1. The voltmeter reading should be 0.00 V with FREQUENCY switches set at 000 MHz, -2.5 V at 250 MHz and -5.0 V at 500 MHz. These voltages indicate proper operation of module M22. Connect voltmeter to M2M pin 8. The voltmeter reading should be +6 to +7 V at 000 MHz, 0 V at 250 MHz and -8 V at 500 MHz. If these voltages are obtained, module M172 is operating properly.

Measure the Wide Oscillator signal at module M9W. The frequency will be between 1198 MHz and 1718 MHz, depending upon the setting of the FREQUENCY switches. If the signal level is as specified in Table 5-2, module M9W is operating correctly.

Measure the 40 comb line at module M30. The 40 MHz harmonics from 40 MHz to 280 MHz should be fairly equal in amplitude and the level should be as specified in Table 5-2. This level indicates proper operation of the M30 module.

Measure the 1448 MHz to 1487 MHz signal at module M32. The exact frequency is dependent upon the setting of the MHz FREQUENCY switches. If the level is as specified in Table 5-2, the M32 is operating properly.

Last, measure the 10 MHz to 9.001 MHz output of the M31 module. The output

will be 10.000 MHz with the kHz FREQUENCY switches set to 000 kHz, and the frequency will decrease to 9.001 MHz with the kHz switches set to 999 kHz. If the signal level is as specified in Table 5-2, module M31 is operating properly.

If output of each of the above modules is correct, module M34 or an RF cable is defective. A further check of the M34 can be made by monitoring M34 pin 8 with a digital voltmeter while stepping through the frequency range from 10 MHz to 520 MHz in 10 MHz steps. The voltmeter reading should be 0 ±3 V; however, a defective M34 may give a voltage reading of 12 to 16 volts.

TABLE 5-2. MODULE SIGNAL LEVELS

PHASE-LOCKED LOOP	MODULE	INPUT-SIGNAL FREQUENCY	INPUT-SIGNAL LEVEL	SIG. MEASURED AT
1	M31	1 kHz	TTL	M30 (W13)
2	M32	1 MHz	TTL	M30 (W12)
		1440 MHz	-12 to -15 dBm	M30 (W9)
3	M33	1198 MHz	-10 dBm ±3 dB	M9W (W5)
		1200 MHz (120 comb)	-15 dBm ±5 dB	M30 (W10)
		1.5 to 2.5 MHz	1 volt p-p	M29-1 (W7)
		2 MHz	TTL	M30 (W11)
4	M34	1198 to 1718 MHz	-10 dBm ±5 dB	M9W (W4)
		1448 to 1487 MHz	-2 dBm ±3 dB	M32 (W8)
		40 to 280 MHz (40 comb)	-10 dBm ±3 dB	M30 (W6)
		10 to 9.001 MHz	TTL	M31 (W14)

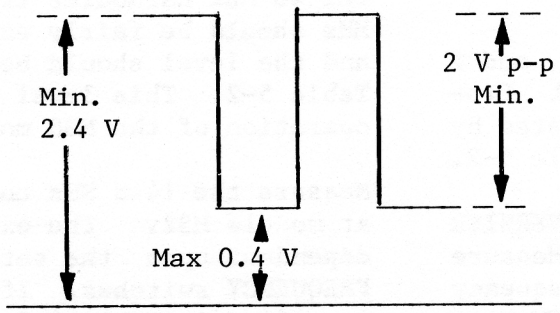

TTL LOGIC LEVEL

BCD FREQUENCY SWITCHES - Troubles in the BCD switch circuits may be caused by a defective switch, loose or disengaged switch connector or a broken switch wire.

Five of the switches utilize four wires plus a ground to select decimal digits from 0 through 9. The 100's MHz switch uses three wires plus ground, since it only needs to select digits between 0 and 5. A "BCD Truth Table", applicable to each of the six switches, is given in Table 5-3.

Suspected switch problems can be checked by referring to Table 5-3 and the Model 3000 Wiring Diagram to determine which module pins are grounded for a particular frequency. For example, to select a frequency of 200.500 MHz, M172 pin 3 is grounded by selecting digit 2 on the 100's MHz switch, and M31 pins 2 and 4 are grounded by digit 5 on the 100's kHz switch.

TABLE 5-3. BCD FREQUENCY SWITCHES

Decimal Digit	BCD Wires 8 4 2 1
0	- - - -
1	- - - 0
2	- - 0 -
3	- - 0 0
4	- 0 - -
5	- 0 - 0
6	- 0 0 -
7	- 0 0 0
8	0 - - -
9	0 - - 0

NOTE: 0 = Wire Grounded by Switch.
- = Wire NOT Grounded.

MODULATION TROUBLES - The Modulation Board (C316) is the most common cause of modulation problems, particularly when the modulating signal is lost. Non-linear amplitude modulation, at higher-audio frequencies from an external source, may be caused by the M10W output amplifier.

The presence of the modulating signal can be determined as follows: Set MODE switch to AM, FREQ to 400 Hz, AM/FM Vernier to 100% and OUTPUT to +3 dBm. Connect oscilloscope vertical input to MOD. T.P. The scope should display a 10 V peak-to-peak sine wave at a frequency of 400 Hz (period of 2.5 ms). Set FREQ switch to 1 kHz - scope display should be a 10 V p-p sine wave at a frequency of 1 kHz (period of 1 ms). Failure to obtain the 400 Hz or 1 kHz signals indicates a defective Modulation Board.

Connect scope vertical input to module M10W pin 15. The scope indication should be a 1 kHz sine wave with an amplitude of approximately 1.75 V p-p. Set FREQ switch to 400 Hz. The scope should display a 400 Hz sine wave having a p-p value of approximately 1.75 V. Failure to obtain the 400 Hz or 1 kHz signals at this point may be due to a defective MODE switch on the Modulation Board, or a broken wire between the Modulation Board and the Meter Board.

Connect scope vertical input to module M29-1 pin 16, and set MODE switch to FMx1 or FMx100. The scope display should be a 400 Hz sine wave having a p-p value of 10 V. Set FREQ switch to 1 kHz. The scope indication should be a 1 kHz sine wave with an amplitude of 10 V p-p. Failure to obtain the 400 Hz or 1 kHz signals may be due to a defective MODE switch, or a broken wire between the Modulation Board and module M29-1.

5.4.2 Module Replacement

While in many cases the Model 3000 will work satisfactorily after simply replacing a defective module, to maintain the high accuracy of which the unit is capable, module replacement should be followed by calibration of the affected circuits. Table 5-4 lists each module and the adjustments needed.

The M172, M9W and M10W modules may be replaced individually, however, it is recommended that these three modules be

replaced as a matched set. If replacement of the M30 or M32 becomes necessary, it is recommended that these two modules be replaced as a matched set also.

TABLE 5-4. REPLACEMENT MODULE CALIBRATION

MODULE REPLACED	ADJUSTMENT REQUIRED (See appropriate paragraphs in Calibration Procedure)
M9W Sweep Oscillator	Reset Phase-Locked Loops #3 and #4
M10W Output Amplifier	Recalibrate Meter Board (C315)
M172 Sweep Drive/DAC	Reset Phase-Locked Loop #4
M29-1 FM Reference	Reset FM Reference Adjustments - M29-1
M30 Crystal Reference	Set Crystal-Frequency Adjustment and Final Freq. Check
M31 kHz Steps	None required (Required on M31 - See page 5-5)
M32 MHz Steps	Adjust Phase-Locked Loop #2
M33 Narrow Osc. Lock	Adjust Phase-Locked Loop #3
M34 Wide Osc. Lock	Set M34 Leveler Voltage (pin 14) for +1.0 VDC. SEE PLL #4
C315 Meter Board	Adjust Meter Board Calibration
C316 Modulation Board	Set AM/FM Vernier Voltage, and FM Reference Adj.
DPS2 Power Supply	Adjust ±18 V and check +7.3 V

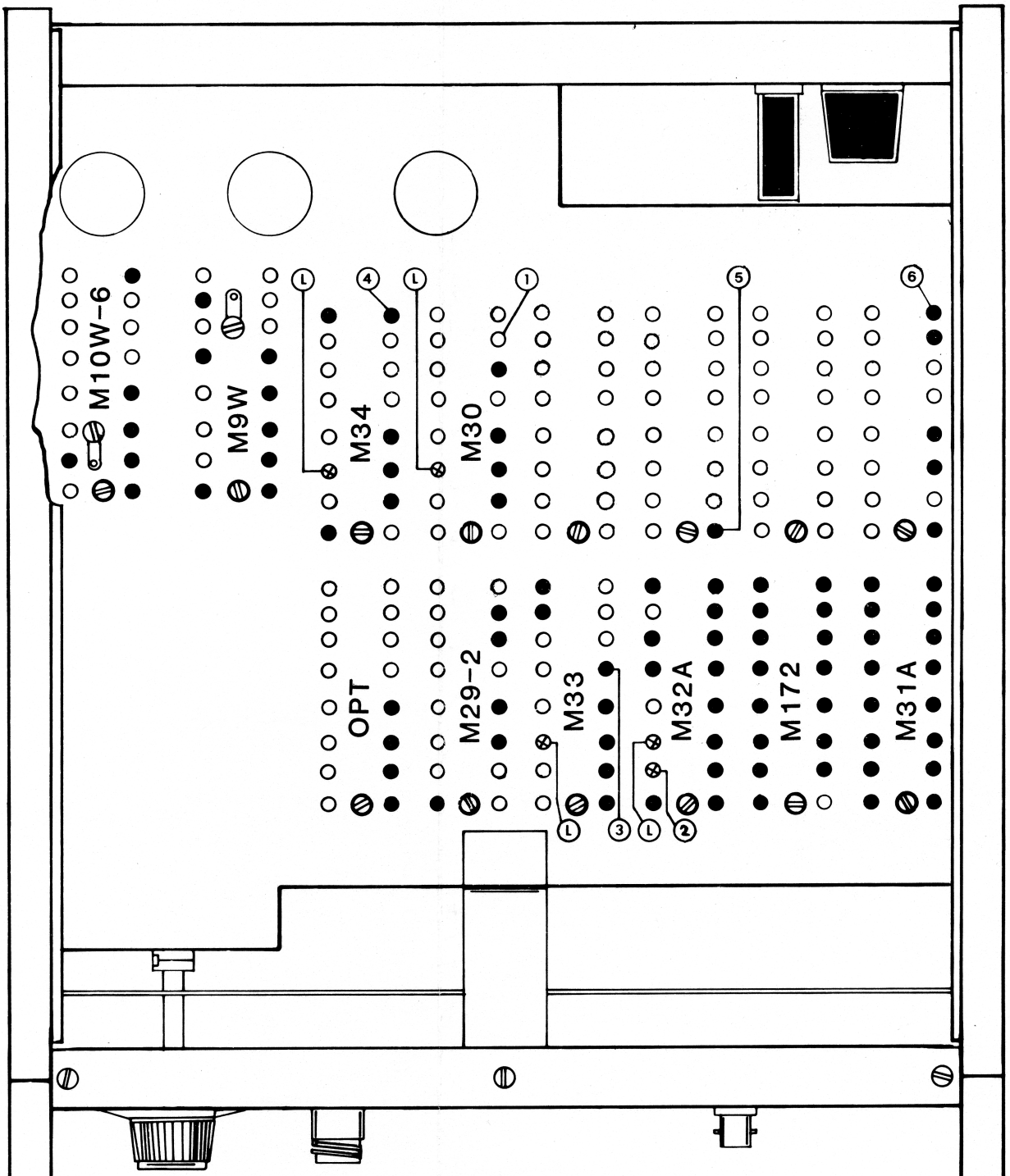

Figure 5-5. Test Points, Chassis Bottom View

(1) DPS2A POWER SUPPLY
A – +18 V ADJ
B – -18 V ADJ
C – FUSE 2 AT

(2) NOT USED

(3) M37 AUX RF OUT (OPT 4)

(4) NOT USED

(5) NOT USED

(6) M30 XTAL REF
A – 1440 MHZ ADJ
B – 1440 MHZ ADJ
C – 10 MHZ TP

(7) M34 WIDE OSC LOCK
A – RF TP
B – UNLOCK INDICATOR

(8) M9W SWEEP OSC
A – WIDE OSC CENT ADJ
B – WIDE OSC LEV ADJ
C – NARROW OSC SW ADJ
D – NARROW OSC LEV ADJ

(9) M10W-9 OUTPUT AMP

(10) M31A KHZ STEPS
A – UNLOCK INDICATOR

(11) M172 SWEEP DRIVE/DAC

(12) M32A MHZ STEPS
A – 000 MHZ ADJ
B – 039 MHZ ADJ
C – UNLOCK INDICATOR

(13) M33 NARROW OSC LOCK
A – RF TP
B – UNLOCK INDICATOR

(14) M29-2 FM REF
A – 2.5 MHZ ADJ
B – 2 MHZ ADJ

(15) M35-1 RF CKT BKR (OPT 3)

(16) 50130-01 STEP ATTEN

(17) C316 MOD BOARD
A – +5 V ADJ
B – FM x 1 ADJ
C – SIZE ADJ
D – BAL ADJ

(18) C315 METER BD
A – METER CAL ADJ
B – METER BAL ADJ
C – LEVEL 0 DBM RANGE +3 ADJ
D – LEVEL 0 DBM RANGE -7 ADJ
E – LEVEL +10 DBM RANGE +3 ADJ
F – LEVEL +10 DBM RANGE +13 ADJ
G – % MOD ADJ

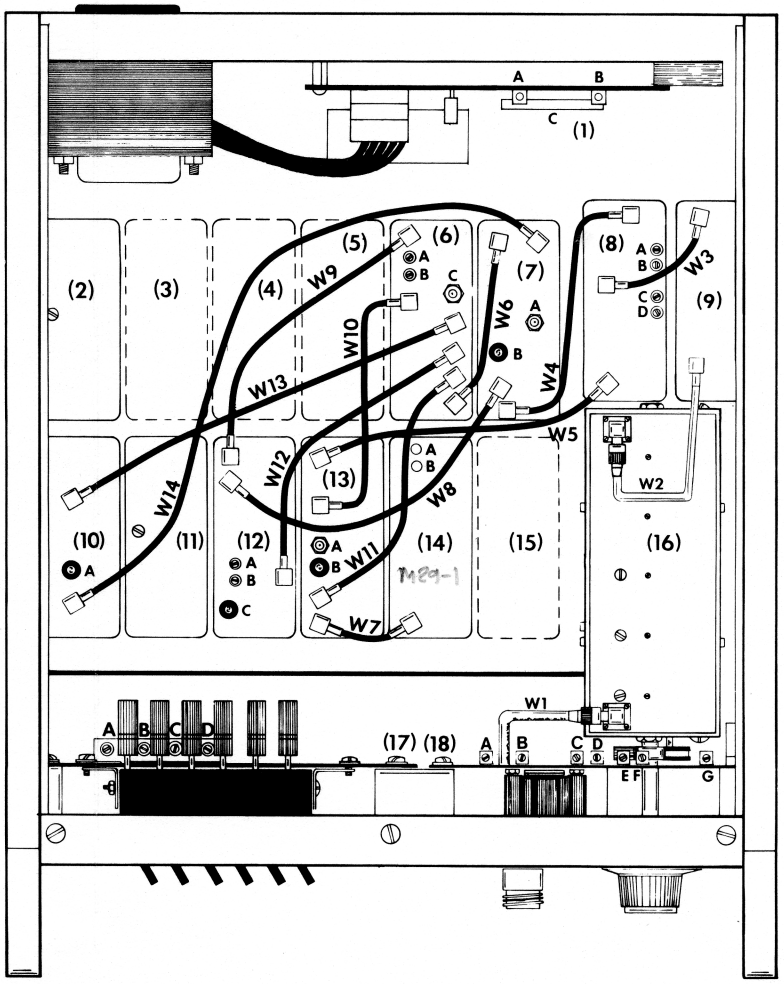

Figure 5-6. Model 3000 Top View

SECTION 6
REPLACEABLE PARTS

6.1 INTRODUCTION

This section contains lists of all replaceable parts for the instrument.

For an assembly containing one or more subassemblies, the assembly list appears first, and is followed by the subassembly list.

The lists appear in the following order.

PARTS LIST	ASSEMBLY
1010-00-0013	3000
1219-00-0016	HARNESS - 3000
1212-00-0006	POWER SWITCH
1110-00-0294	C315
1110-00-0751	C316
1115-00-0011	DPS2A
1218-00-0250	PC - DPS2A
1218-00-0144	LINE CORD - DPS2A
1114-00-0020	M9W
1219-00-0055	MIXER - M9W
1219-00-0054	PRE AMP - M9W
1114-00-0360	M10W-9
1218-00-0600	AMPLIFIER - M10W-9
1218-00-0610	LEVELER - M10W-9
1114-00-0016	M29-2
1114-00-0012	M30
1218-00-0192	PC - M30
1114-00-0143	M31A
1114-00-0215	M32A
1218-00-0022	DIG PGM BD - M32A
1218-00-0021	OSC CTL BD - M32A
1219-00-0117	MIXER - M32A
1219-00-0118	VIDEO AMP - M32A
1114-00-0011	M33
1114-00-0008	M34
1219-00-0129	MIXER/AMP - M34
1219-00-0019	VIDEO AMP - M34
1218-00-0314	LEVELER - M34
1218-00-0334	PHASE LOCK - M34
1219-00-0020	VIDEO MIXER - M34
1114-00-0320	M172

6.2 MANUFACTURERS CODE

The following code is used on the parts lists to identify the manufacturer.

ABBRV	NAME.....	CITY.....	ST
A-B	ALLEN-BRADLEY	MILWAUKEE	WI
A-D	ANALOG DEVICES	CAMBRIDGE	MA
A-H	ARROW HART, INC.	KETTERING	OH
A-I	ALAN INDUSTRIES	COLUMBUS	IN
A-M	AMERICAN MAGNETICS	CARTERVILLE	IL
A-P	AMERICAN PLASTICRAFT CO.	CHICAGO	IL
ABAC	ABACUS PACKAGING CO.	CHICAGO	IL
ACEIN	ACE INDUSTRIAL HDWR.	CAMDEN	NJ
ACI	ADVANCE COMPONENTS, INC.	CENTERBROOK	CT
AEG-T	AEG-TELEFUREN CORP.	SOMERVILLE	NJ
AER	AVX CERAMICS	MYRTLE BEACH	SC
AERTK	AERTECH INDUSTRIES	SUNNYVALE	CA
AHAM	AHAM COMPANY	AZUSA	CA
AIN	ALPHA INDUSTRIES, INC.	WOBURN	MA
ALC	ALCO ELECTRONICS PRODUCTS	NORTH ANDOVER	ME
ALLPL	ALL PLASTICS, INC.	INDIANAPOLIS	IN
AMD	ADVANCED MICRO DEVICES INC.	SUNNYVALE	CA
AMELC	AMERICAN ELECTRIC CORDSETS	BENSENVILLE	IL
AMP	AMP, INC.	HARRISBURG	PA
ANZAC	ADAMS-RUSSELL, ANZAC DIV	BURLINGTON	MA
APL	AMPHENOL CONNECTOR SYSTEMS	BROADVIEW	IL
APP	A-P PRODUCTS	PAINESVILLE	OH
APX	AMPEREX ELECTRONIC CORP.	SLATERSVILLE	RI
ARC	ARCO ELECTRIC PRODUCTS	SHELBYVILLE	IN
ARN	ARNOLD ENGINEERING CO.	MARENGO	IL
ARW-M	ARROW-M CORP.	CARSON	CA
ASC	ASSOCIATED SPRING	BRISTOL	CT
ASE	AIRCO SPEER ELECTRONICS	ST. MARYS	PA
ASTID	ASTRO INDUSTRIES	DAYTON	OH
AT/IN	ATLANTIC INDIA RUBBER COMPANY	CHICAGO	IL
ATC	AMERICAN TECHNICAL CERAMICS	HUNTINGTON STATION	NY
ATR	ATR COIL CO.	BLOOMINGTON	IN
AUGAT	AUGAT, INC.	ATTLEBORO	MA
AULT	AULT INC.	MINNEAPOLIS	MN
AUTCP	AUTOMATION CORP.	PECKVILLE	PA
AVDEL	AVDEL FASTENER SYS.	PARSIPPANY	NJ
AVT	AVANTEK, INC.	SANTA CLARA	CA
AWC	ALPHA WIRE	ELIZABETH	NJ
B-T	BEK-TEK, INC.	READING	PA
BEARI	BEARINGS, INC.	CLEVELAND	OH
BEK	BECKMAN INSTRUMENTS, INC.	FULLERTON	CA
BEL	BELDEN CORP.	GENEVA	IL
BER	BERG ELECTRONICS	NEW CUMBERLAND	PA
BGH	BEECH GROVE HARDWARE	BEECH GROVE	IN
BORDN	BORDEN INC.	COLUMBUS	OH
BOU	BOURNS, INC.	RIVERSIDE	CA
BREZ	BREEZE CORPORATIONS, INC.	UNION	NJ
BSCAN	B-SCAN, INC.	PHILADELPHIA	PA
BUCK	BUCKEYE STAMPING CO.	COLUMBUS	OH
BUD	BUD RADIO, INC.	WILLOUGHBY	OH
BURND	BURNDY CORP.	NORWALK	CT
BUS	BUSSMAN MFG.	ST. LOUIS	MO
BWC	BARON WIRE AND CABLE CORP.	NILES	IL
C-D	CORNELL DUBILIER ELECT. DIV.	NEWARK	NJ
C-E	CLINTON ELECTRONICS	ROCKFORD	IL
C-H	CUTLER-HAMMER, INC.	MILWAUKEE	WI
C-I	COMPONENTS, INC.	BIDDEFORD	ME
C-J	TRW/CINCH	ELK GROVE VILLAGE	IL
C-K	C & K COMPONENTS, INC.	WATERTOWN	MA
C-L	CENTRALAB DIV.	MILWAUKEE	WI
C M	C-M		
C-W	C-W INDUSTRIES	WARMINSTER	PA
CAI	CUSTOM ACCESSORIES, INC.	SKOKIE	IL
CAM	CAMBION	CAMBRIDGE	MA
CAR	CARLING ELECTRIC, INC.	WEST HARTFORD	CT
CCM	CORCOM, INC.	CHICAGO	IL
CDC	COMPONENT DEVELOPMENT CORP.	CARSON	CA
CECO	CENTRAL COIL CO.	BRAZIL	IN
CFI	CIRCUIT FUNCTIONS INC.	NEWBURY PK	CA
CGW	CORNING GLASS WORKS	CORNING	NY
CHE	CHERRY ELECTRICAL PRODUCTS	WAUKEGAN	IL
CHEMP	CHEMPLAST, INC.	WAYNE	NJ
CHLAR	CHARLES LARSON CO.	STERLING	IL
CHOM	CHOMERICS INC.	WOBURN	MA
CHRY	CHRYSLER CORP.	DETROIT	MI
CIMCO	CIMCO WIRE AND CABLE INC.	ALLENDALE	NJ

ABBRV	NAME.....	CITY.....	ST
CKI	CTS KNIGHTS, INC.	SANDWICH	IL
CLA	CLAIREX CORP.	MT. VERNON	NY
CLAR	CLAROSTAT MFG. CO	DOVER	NH
CLFRM	COILFORM	GENEVA	IL
CLFX	COLE-FLEX CORP.	BABYLON	NY
CNCRD	CONCORD ELEX	NEW YORK	NY
CPKG	CREATIVE PACKAGING DIV.	INDIANAPOLIS	IN
CPLRD	COMPLETE READING		
CRTR	CORE-TRONICS	ORANGE	NJ
CTS	CHICAGO TELEPHONE SYSTEMS	CHICAGO	IL
CTS-E	CTS OF ELKHART	ELKHART	IN
CTS-F	C.T.S. OF FAIRBERRY	FAIRBERRY	IL
CTS-K	CTS OF KEENE	PASO ROBLES	CA
CTSBR	CTS OF BERNE	BERNE	IN
CTSBV	CTS OF BROWNSVILLE	BROWNSVILLE	TX
CW/AL	C.W./ALPHA	SOUTHAMPTON	PA
DAL	DALE TECHNOLOGY CORP.	HARTSDALE	NY
DATEL	DATEL SYSTEMS, INC.	MANSFIELD	MA
DAV	HARRY DAVIES MOLDING CO.	CHICAGO	IL
DAYTN	DAYTON ELECTRIC CO.	CHICAGO	IL
DEL	DELEVAN DIV.	EAST AURORA	NY
DEN	DENNISON MFG. CO.	FRAMINGHAM	MA
DEW	DEWIRE FABRICATING CORP.	LOWELL	MA
DILEC	DILECTRON	MONROVIA	CA
DIO	DIODES, INC.	CHATSWORTH	CA
DK-WR	DAKO-WARE	CHICAGO	IL
DLGHT	DIALIGHT	BROOKLYN	NY
DNTCH	DONTECH, INC.		
DRA	DRAKE MANUFACTURING CO.	HARWOOD HEIGHTS	IL
DRMYR	DORMEYER	ROCKVILLE	IN
DYNR	DYNEER CORP.	CHATSWORTH	CA
E-C	ELECTRONIC CRYSTALS	KANSAS CITY	MO
E-I	ELECTRICAL INDUSTRIES, INC.	MURRAY HILL	NJ
E-M	ELECTRA/MIDLAND CORP.	MINERAL WELLS	TX
EBY	EBY COMPANY	PHILADELPHIA	PA
ECKDT	ECKARDT LABORATORIES	ORANGE	CA
ECMC	ELECTRI-CORD MFG. CO. INC.	WESTFIELD	PA
ELC-I	ELECTRA	CUMBERLAND	IN
ELCO	ELCO INDUSTRIES	ROCKFORD	IL
ELEXP	ELECT EXPEDITERS	MILWAUKEE	WI
ELFX	ELECTRO-FLEX HEAT INC.	BLOOMFIELD	CT
ELHDW	ELECTRONIC HARD	FARMINGDALE	NY
ELNA	ELNA	CARSON	CA
EMRON			S
EPITK	EPITEK ELECTRONICS	KANATA, ONT., CAN.	**
EPOXT	EPOXY TECHNOLOGY, INC.	BILLERICA	MA
ETC	ELECTRONIC TRANSISTOR CORP.	FLUSHING	NY
ETP	ERIE TECHNOLOGICAL PRODUCTS	ERIE	PA
EVRDY	EVEREADY	NEW YORK	NY
EXAR	EXAR INTEGRATED SYSTEMS	SUNNYVALE	CA
EZLOK	E-Z LOK	GARDENIA	CA
F-K	THERMWELL PRODUCTS, INC.	FRAMINGHAM	MA
F-S	FEDERAL SCREW	CHICAGO	IL
FAN	FANCOURT & CO.	GREENSBORO	NC
FASTX	FASTEX DIV., ILL. TOOL WORKS	DES PLAINES	IL
FCD	FAIRCHILD	MOUNTAIN VIEW	CA
FNWL	FENWAL	FRAMINGHAM	MA
FRK	FRAKO	FRANKFORT, GER.	**
FRTE	FAIR RITE PRODUCTS CORP.	WALLKILL	NY
FRXC	FERROXCUBE DIVISION	SAUGERTIES	NY
G-E	GENERAL ELECTRIC	INDIANAPOLIS	IN
G-H	GRAYHILL, INC.	LA GRANGE	IL
G-I	GEN'L INSTRUMENT SEMICONDUCTOR	HICKSVILLE	NY
G-T	GRAND TRANSFORMERS	GRAND HAVEN	MI
GAL	GALILEO ELECTRO-OPTICS	CARMEL	IN
GATES	GATES ENERGY PROD.	DENVER	CO
GBN	GILBERT ENGINEERING CO. INC.	PHOENIX	AZ
GCE	GC ELECTRONICS	ROCKFORD	IL
GHZ	GHZ DEVICES, INC.	CHELMSFORD	MA
GLOBE	GLOBE	MILWAUKEE	WI
GNATR	GENERAL ATRONICS CORP.	PHILADELPHIA	PA
GOU	GOULD, INC.	ST. PAUL	MN
GRIES	GRIES REPRODUCER	NEW ROCHELLE	NY
GRIP	GRIPMASTER CO.	MARLBORO	NJ
GRVCO	GROVE COMPANY	DAYTON	OH
GUDL	GUDEBROD BROS. SILK CO.	CHICAGO	IL

ABBRV	NAME.....	CITY.....	ST
H-P	HEWLETT-PACKARD	INDIANAPOLIS	IN
HARTW	HARTWELL CORP.	PLACENTIA	CA
HEL	HELIPOT	ANAHEIM	CA
HEY	HEYMAN MFG. CO.	WAUKESHA	WI
HHS	HERMAN H. SMITH, INC.	BROOKLYN	NY
HI-G	HI-G INC.	WINDSOR LOCKS	CT
HI-G	HI-G INC	WINDSOR LOCKS	CT
HIT	HITACHI AMERICA, LTD.	SAN FRANCISCO	CA
HMLN	HAMLIN	LAKE MILLS	WI
HOLGW	HOLLINGSWORTH SLDRLS TERM.	POTTSTOWN	PA
HOLUB	HOLUB DISTRIBUTING CO.	NEWPORT	KY
HSD	HARRIS CORP. SEMICDR. DIV.	MELBOURNE	FL
HUD	HUDSON TOOL & DIE CO.	NEWARK	NJ
HY/PL	HYDRO PLASTICS INC.	GEORGETOWN	KY
HYSYS	HYBRID SYSTEMS	BEDFORD	MA
HYT	HYTRONICS	PINELLAS PARK	FL
ICI	ILLINOIS CAPACITOR INC.	MORTON GROVE	IL
ICO-R	ICO-RALLY	PALO ALTO	CA
IERC	INT'L ELEC. RESEARCH CORP.	BURBANK	CA
INDCP	INDUCTIVE COMPONENTS	HAUPPAUGE	NY
INDEC	INDUSTRIAL ELECTRONIC HDWR.	NEW YORK	NY
INLOK	INTERLOK/WM J PURDY CO.	BURLINGAME	CA
INT	INTERSIL, INC.	CUPERTINO	CA
INWEB	INTERNATIONAL WEBBING	WHITEHALL	PA
IRC	INTERNATIONAL RESISTANCE CO.	PHILADELPHIA	PA
IREC	INT'L RECTIFIER CORP.	LOS ANGELES	CA
ITRON	ISE ELECTRONICS	ISE, JAPAN	**
ITT	INT'L TELEPHONE & TELEGRAPH	W. PALM BEACH	FL
JAMES	JAMES ELECTRONICS	CHICAGO	IL
JAN	JAN HARDWARE MFG. CO.	LONG ISLAND CITY	NY
JEF	JEFFERS	DUBOIS	PA
JEFWC	JEFFERSON WIRE AND CABLE	WORCHESTER	MA
JEW	JEWELL ELECTRICAL INSTRUMENTS	MANCHESTER	NH
JFD	JFD ELECTRONICS	BROOKLYN	NY
JFW	JFW INDUSTRIES	BEECH GROVE	IN
JHSN	JOHANSON MFG. CORP.	BOONTON	NJ
JON	E.F. JOHNSON CO.	WASECA	MN
JUDD	JUDD WIRE DIV. ECC	TURNERS FALLS	MA
K-L	KERRIGAN LEWIS MFG.	CHICAGO	IL
K-S	K & S ENGINEERING CO.	CHICAGO	IL
KDI-P	KDI-PYROFILM CORP.	WHIPPANY	NJ
KEENE	KEENE CORP.	NEWARK	DE
KEM	KEMTRON ELECTRON PRODUCTS	NEWBURYPORT	MA
KEY	KEYSTONE ELECTRONIC CORP.	NEW YORK	NY
KID	KIDCO, INC.	MEDFORD	NJ
KIN	KINGS ELECTRONICS	TUCKAHOE	NY
KMYO	KAMAYA OHM	JAPAN	**
KRYST	KRYSTINEL	PATERSON	NJ
KSTR	KESTER SOLDER DIV.	CHICAGO	IL
KSW	KSW ELECTRONICS	BURLINGTON	MA
KSW	KSW ELECTRONICS	BURLINGTON	MA
KUL	KULKA ELECTRIC CORP.	MT. VERNON	NY
LAURN	LAUREN MFG CO.	NEW PHILADELPHIA	OH
LEYSE	LEYSE ALUMINUM CO.	KEWANEE	WI
LIT	LITTELFUSE, INC.	DES PLAINES	IL
LNMST	LINEMASTER SWITCH CORP.	WOODSTOCK	CT
LOCTT	LOCTITE CORP.	NEWINGTON	CT
LRC	LRC ELECTRONICS, INC.	HORNELL	NY
LTRNX	LITRONIX	CUPERTINO	CA
M-A	MICROWAVE ASSOCIATES	BURLINGTON	MA
M-D	MILLER DIAL & NAMEPLATE CO.	EL MONTE	CA
M-E	MEPCO ELECTRA, INC.	MORRISTOWN	NJ
M-O	ILLUMINATED PRODUCTS INC.	SANTA ANA	CA
M-P	MICRO PLASTICS INC.	CHATSWORTH	CA
MAL	MALLORY CONTROLS CO.	FRANKFORT	IN
MAND	MANDEX	CHICAGO	IL
MARQ	J. & J. MARQUARDT	TUTTLINGEN, GER.	**
MCREL	MICRO ELEX LTD	HONG KONG	**
MD-AM	MID AMERICA	CHICAGO	IL
MDC	MAIDA DEVELOPMENT CO.	HAMPTON	VA
MDLRS	MIDLAND ROSS	CINCINNATI	OH
MDTC	MODUTEC	NORWALK	CT
MILN	MILLEN MFG. CO.	NEW YORK	NY
MILSP	MILITARY SPECIFICATION	WASHINGTON	DC
MIN-C	MINI-CIRCUITS	BROOKLYN	NY
MINIS	MINI SYSTEMS	NORTH ATTLEBORO	MA

ABBRV	NAME.....	CITY.....	ST
MINOR	MINOR RUBBER CO.	BLOOMFIELD	NJ
MITEK	MITEK	LEXINGTON	MA
MLRJW	J.W. MILLER	COMPTON	CA
MMM	3M COMPANY	ST. PAUL	MN
MNO	MONSANTO COMM. PROD. DIV.	PALO ALTO	CA
MOL	MOLEX PRODUCTS	LISLE	IL
MORAD	MORGAN ADHESIVES	STOW	OH
MOSTK	MOSTK CORP.	CARROLLTON	TX
MOT	MOTOROLA SEMI. PROD. DIV.	INDIANAPOLIS	IN
MRM	M. ROSS MASON	INDIANAPOLIS	IN
MRO	MICRO SWITCH DIV.	FREEPORT	IL
MRRUB	MARION RUBBER PROD.	INDIANAPOLIS	IN
MSN	MICROSONICS DIV.	WEYMOUTH	MA
MSP	MICRO SEMICONDUCTOR CORP.	SANTA ANA	CA
MULSO	MULTICORE SOLDERS LTD.	WESTBURY	NY
MURA	MURA		
MURA	MURA	WESTBURY	NY
MURGA	MURATA-GEORGIA	MARIETTA	GA
MWS	MAGNET WIRE SUPPLY CO.	CHATSWORTH	CA
MYERS	MYERS SPRING CO.	LOGANSPORT	IN
N-T	NATIONAL TEL-TRONICS	LAREDO	TX
NAT	NATIONAL SEMICONDUCTOR CORP.	SANTA CLARA	CA
NCC	NATIONAL CERAMIC CO	TRENTON	NJ
NCSVC	NATL COM SERV.	WILLOW GROVE	PA
NEC	NIPPON ELECTRIC CO.	TOKYO, JAPAN	**
NEL	NATIONAL ENGINEERING LABS	INDIANAPOLIS	IN
NEW	NEWARK ELECTRONICS	INDIANAPOLIS	IN
NHWC	NEW HAVEN WIRE & CABLE	NEW HAVEN	IN
NICHN	NICHICON (AMERICA) CORP.	SCHAUMBURG	IL
NMB	NMB CORP.	ARLINGTON HEIGHTS	IL
NMC	MAGNUM MICROWAVE CORP.	SUNNYVALE	CA
NPC	NUCLEONIC PRODUCTS CO.	CANOGA PARK	CA
NYLO	NYLOMATIC	MORRISVILLE	PA
O-G	OPTI-GAGE INC.	DAYTON	OH
O-S	OMNI SPECTRA INC.	FARMINGTON	MI
OAK	OAK INDUSTRIES INC.	CRYSTAL LAKE	IL
OHM	OHMITE MFG. CO.	SKOKIE	IL
OMEGA	OMEGA WIRE & CABLE	HARLEYSVILLE	PA
OPTRN	OPTRON INC.	CARROLLTON	TX
P-B	POTTER AND BRUMFIELD	PRINCETON	IN
P-C	POWER COMPONENTS	WOODLAND HILLS	CA
P-K	PARKER KALON CORP.	CLIFTON	NJ
P-T	PENN TUBE PLASTICS CO.	CLIFTON HEIGHTS	PA
P-U	PROJECTS UNLIMITED INC.	DAYTON	OH
POLPH	POLYPHASE INSTR. CO.	BRIDGEPORT	PA
PACTC	PACTEC DIV.	PHILADELPHIA	PA
PAM	PAMOTOR DIV.	BURLINGAME	CA
PAND	PANDUIT CORP.	TINLEY PARK	IL
PARA	PARAMETRIC INDUSTRIES	NORTHFIELD	IL
PCC	PANEL COMPONENTS CORP.	BERKELEY	CA
PEC	PACIFIC ELECTRICORD CO.	GARDENA	CA
PEM	PENN ENGRG & MANUF CO.	DANBORO	PA
PFZR	PFIZER, NC.		
PHC	PHILADELPHIA HANDLE CO.	CAMDEN	NJ
PHILP	PHILPOTT RUBBER CO.	CLEVELAND	OH
PIC	PIHER INTERNATIONAL CORP.	ARLINGTON HEIGHTS	IL
PLI	PRECISION LAMP, INC.	MT. VIEW	CA
PLSSY	PLESSEY ENG.	SCHILLER PARK	IL
PLSTI	PLASTIC TECHNIQUES, INC	NEW BOSTON	NH
PLYCL	POLYCLAD LAMINATES	SOUTHFIELD	MI
PMCL	PERMACEL DIV.	NEW BRUNSWICK	NJ
PMI	PRECISION MONOLITHICS INC.	SANTA CLARA	CA
PNSNC	PANASONIC		
POM	POMONA ELECTRONICS CO., INC.	POMONA	CA
PREH	PREH VERT, MBH	GERMANY	**
PRMD	PYRAMID INDUSTRIES, INC.	PHOENIX	AZ
PRSLK	PRESTO-LOCK	GARFIELD	NJ
PRSN	PRECISION TUBE CO., INC	NORTH WALES	PA
PTN	PENN TRAN CORP.	BELLEFONT	PA
PWRMT	POWER-MATE CORP.	HACKENSACK	NJ
PYRO	PYROFILM CORP.	WHIPPANY	NY
PYTT	PYTTRONICS INDUSTRIES, INC.	MONTGOMERYVILLE	PA
Q-C	QUALITY COMPONENTS	ST. MARYS	PA
R-N	ROBINSON-NUGENT	NEW ALBANY	IN
R-OHM	R-OHM	IRVINE	CA
RAWST	RAW STOCK	*****	**

ABBRV	NAME	CITY	ST
RAY	RAYTHEON	INDIANAPOLIS	IN
RCA	RCA	CAMDEN	NJ
REL	RELIANCE MICA CO.	BROOKLYN	NY
RGNCY	REGENCY ELECTRONICS, INC.	INDPLS.	IN
RGR	ROGERS CORP.	CHANDLER	AZ
RICH	RICHCO PLASTIC CO.	CHICAGO	IL
RICHM	RICHARDS METAL PRODUCTS	WOLCOTT	CT
RMC	RADIO MATERIALS CORP.	CHICAGO	IL
RMF	RMF PRODUCTS INC.	BATAVIA	IL
ROCKW	ROCKWELL INTL.	ANAHEIM	CA
ROGAN	ROGAN CORP.	NORTHBROOK	IL
ROTRN	ROTRON INC.	WOODSTOCK	NY
RPBLC	REPUBLIC ELECTRONICS CORP	PATTERSON	NJ
RSSLL	RUSSELL	OCEANSIDE	NY
S-C	SPECIALTY CONNECTOR	INDIANAPOLIS	IN
S-G	STANDARD GRIGSBY	AURORA	IL
S-I	SWITCHCRAFT, INC.	CHICAGO	IL
S-S	SERVICE SUPPLY	INDIANAPOLIS	IN
S-T	SARKES TARZIAN	BLOOMINGTON	IN
SAGE	SAGE LABORATORIES, INC.	NATIC	MA
SAYRO	SAYROSA ENGINEERS LTD.	ALTON, HANTS, U.K.	**
SCBE	SCANBE DIVISION	EL MONTE	CA
SCC	STACKPOLE CARBON CO.	ST. MARYS	PA
SCX	SILICONIX INC.	SANTA CLARA	CA
SEAST	SEASTROM MFG. CO.	GLENDALE	CA
SECR	SECOR INC.	WESTWOOD	NJ
SEL	SEALECTRO CORP.	MAMARONECK	NY
SEM	SEMTECH	NEWBURY PARK	CA
SEMTX	SEMTEX	DAYTON	OH
SGM	SIGMA INSTRUMENTS	BRAINTREE	MA
SGS-A	SGS-ATES COMP ELET SPA	AGRATE BRIANZE, ITALY	**
SHAM	SHAMROCK PLASTICS & RUBBER CO.	INDIANAPOLIS	IN
SHDW	I.E.E. SCHADOW	EDEN PRAIRIE	MN
SHKMN	SHACKMAN INSTRUMENTS	CHESHAM, ENGLAND	**
SIEM	SIEMENS	ISELIN	NJ
SIG	SIGNETICS CORPORATION	SUNNYVALE	CA
SIGPT	SIGMA PLASTRONICS	DEARBORN	MI
SINCR	SINCLAIR & RUSH, INC.	ST. LOUIS	MO
SKDRV	STOCK DRIVE PROD. DIV.	NEW HYDE PARK	NY
SLT	SOLITRON/MICROWAVE DIV.	PORT SALERNO	FL
SMTC	SAMTEC INC.	NEW ALBANY	IN
SOUTH	SOUTHCO FASTENERS	LESTER	PA
SPE	SPECTROL	DAYTON	OH
SPEC	SPECTRUM CONTROL, INC.	FAIRVIEW	PA
SPR	SPRAGUE ELECTRIC CO.	INDIANAPOLIS	IN
SPRTX	SUPERTEX INC.	CUPERTINO	CA
SPST	SPECTRA-STRIP	GARDEN GROVE	CA
SSS	SOLID STATE SCIENTIFIC	MONTGOMERYVILLE	PA
STDPS	STANDARD PRESSED STEEL	JENKINTOWN	PA
STKFS	STAKE FASTENERS	SOUTH EL MONTE	CA
STR	STETTNER TRUSH CO.	CAZENOVIA	NY
STSA	STEEL SALES	INDIANAPOLIS	IN
SYL	GTE SYLVANIA	WALTHAM	MA
SYNTC	SYNTAC CORP.	CLEVELAND	OH
SYNTK	SYNERTEK	**	*
SYS	SYSCON INTERNATIONAL, INC.	SOUTH BEND	IN
T-I	TEXAS INSTRUMENTS	DALLAS	TX
TCPL	TACONIC PLASTIC	PETERSBURG	NY
TEK	TEKTRONIX	INDIANAPOLIS	IN
TEKA	TEKA PRODUCTS INC.	COLLEGE POINT	NY
TEKNT	TECKNIT	CRANFORD	NJ
TELE	TELETYPE CORP.	ELK GROVE VILLAGE	IL
TELRY	TELEDYNE RELAYS	HAWTHORNE	CA
TFI	T&F INDUSTRIES DIV.	ROLLING MEADOWS	IL
THR	THERMALLOY CO.	DALLAS	TX
TIMES	TIMES WIRE AND CABLE	CINCINNAI	OH
TIN	TINNERMAN PRODUCTS, INC.	CLEVELAND	OH
TKN	TECHNICAL WIRE	CRAWFORD	NJ
TLNC	TELONIC ALTAIR	LAGUNA BEACH	CA
TOKO	TOKO AMERICA	SKOKIE	IL
TOKO	TOKO AMERICA	SKOKIE	IL
TORCO	TOR CORP.	VAN NUYS	CA
TR-UT	TRIAD-UTRAD DIV.	HUNTINGTON	IN
TRIYX	TRIONYX INDUSTRIES	INDIANAPOLIS	IN
TRU	WALDES TRUARC	LONG ISLAND CITY	NY

ABBRV	NAME.....	CITY.....	ST
TRW	TRW CAPACITOR DIV.	OGALLALA	NB
TSHBA	TOSHIBA	**	*
TVL	TEL-VISION LABS	WAUCONDA	IL
TWAY	TWAY COMPANY	INDIANAPOLIS	IN
TYTON	TYTON CORP.	MILWAUKEE	WI
U-C	UNIVERSAL COMPONENTS	LOS ANGELES	CA
ULSP	UNDERWRITERS LAB. SPEC.	CHICAGO	IL
UNCAR	UNION CARBIDE COMPONENTS	GREENVILLE	SC
UNIC	UNICORP	ORANGE	NJ
UNIT	UNITRODE CORP.	WATERTOWN	MA
USECO	USECO DIV.	VAN NUYS	CA
UTK	UNITRACK DIV.	UPPER DARBY	PA
VAC	VACTEC INC.	MARYLAND HEIGHTS	MO
VACO	VACO PRODUCTS CO.	NORTHBROOK	IL
VAR	VARADYNE CAPACITOR DIV.	SANTA MONICA	CA
VARIL	VARI-L CO.	DENVER	CO
VELCR	VELCRO USA INC	NEW YORK	NY
VISCM	VISUAL COMM		
VLIER	VLIER ENGINEERING CORP.	BURBANK	CA
VONGT	VONNEGUT HARDWARE	INDIANAPOLIS	IN
VRN	VERNITRON CORP.	GREAT NECK	NY
VTRMN	VITRAMON, INC.	BRIDGEPORT	CT
W-E	WELLS ELECTRONICS	SOUTH BEND	IN
W-I	WAVETEK INDIANA, INC.	BEECH GROVE	IN
WAG	WAGNER ELECTRIC CORP.	ST. LOUIS	MO
WECK	WECKESSER CO., INC.	CHICAGO	IL
WHTMN	WHITMAN	CINCINNATI	OH
WKFLD	WAKEFIELD ENGINEERING	WAKEFIELD	MA
WLDM	WALDOM	CHICAGO	IL
WMBG	W.M. BERG	ROCKAWAY	NY
WNSL	WEINSCHEL ENGINEERING	GAITHERSBURG	MD
WNZLR	WINZLER MFG	CHICAGO	IL
WSD	WAVETEK	SAN DIEGO	CA
WSTN	WESTON COMPONENTS	ARCHBALD	PA
ZEN	ZENITH RADIO CORP.	CHICAGO	IL
ZERO	ZERO MANUFACTURING CO.	BURBANK	CA
ZIE	ZIERICK MFG. CORP.	MOUNT KISCO	NY
ZPT	ZIPPERTUBING, CO.	LOS ANGELES	CA

REFERENCE DESIGNATORS	PART DESCRIPTION	ORIG-MFGR-PART-NO	MFGR	WAVETEK NO.	QTY/PT
1	METER BOARD ASSY C315	C315	W-I	1110-00-0294	1
2	MOD BD, C316	C316	W-I	1110-00-0751	1
15	CHASSIS, 3000	A500-313	W-I	1111-00-0005	1
14	ATTEN, 50130-01	50130-01	W-I	1113-30-0041	1
13	WIDE OSC LK, M34	M34	W-I	1114-00-0008	1
12	NAR OSC LK, M33	M33	W-I	1114-00-0011	1
9	XTAL REF, M30	M30	W-I	1114-00-0012	1
8	FM REF, M29-2	M29-2	W-I	1114-00-0016	1
5	SWP OSC, M9W	M9W	W-I	1114-00-0020	1
10	KHZ STEPS, M31A	M31A	W-I	1114-00-0143	1
11	MHZ STEPS, M32A	M32A	W-I	1114-00-0215	1
NONE	DAC/SWP DRIVE, M172	M172	W-I	1114-00-0320	1
NONE	OUTPUT AMP, M10W-9	M10W-9	W-I	1114-00-0360	1
3	POWER SUPPLY, DPS2A	DPS2A	W-I	1115-00-0011	1
W7	CABLE ASSY, 2-1/4 IN	WX2000-A1	W-I	1217-00-0022	1
W10 W6	CABLE ASSY, 3-1/4 IN	WX3001-W10	W-I	1217-00-0032	2
W11 W4	CABLE ASSY, 4 IN	WX3001-W4	W-I	1217-00-0040	2

REFERENCE DESIGNATORS	PART DESCRIPTION	ORIG-MFGR-PART-NO	MFGR	WAVETEK NO.	QTY/PT
W12 W5 W8 W9	CABLE ASSY, 5 IN	WX3000-200-W18	W-I	1217-00-0050	4
W13	CABLE ASSY, 8-1/2 IN	WX3000-200-W9	W-I	1217-00-0084	1
W14	CABLE ASSY, 10-1/4 IN	WX3000-200-W21	W-I	1217-00-0102	1
W2	CABLE ASSY, 5 IN	WX3000-200-W3	W-I	1217-90-0003	1
W3	CABLE ASSY, 2-1/4 IN	WX3000-200-W10	W-I	1217-90-0004	1
W1	CABLE ASSY, 7 IN	WX3001-W1	W-I	1217-90-0005	1
16	HARNESS, 3000-AB	WY3000-AB	W-I	1219-00-0016	1
P101	PLUG, 36-PIN MC000-055	03-06-2362	MOL	2113-04-0005	1
18	TERMINAL, MALE MC000-019	1854	MOL	2113-05-0002	36

REFERENCE DESIGNATORS	PART DESCRIPTION	ORIG-MFGR-PART-NO	MFGR	WAVETEK NO.	QTY
2	TERMINAL, FEMALE MC000-018	02-06-1131	MOL	2113-05-0001	24
3	RECEP, 36-PIN MC000-054	03-06-1361	MOL	2113-03-0004	1
4	SOCKET MC000-065	583369-1	AMP	2113-15-0001	6
5	CONTACT MC000-069	583259-2	AMP	2113-16-0001	29
NONE	JACK, FEMALE, 9-CKT MC000-067	09-50-3091	MOL	2113-06-0001	2
NONE	CONN, 6-PIN, KONEKTON MC000-076	09-50-3061	MOL	2113-06-0002	1
NONE	CONTACT MC000-068	08-50-0107	MOL	2113-07-0001	22

WAVETEK PARTS LIST	TITLE	ASSEMBLY NO.	REV
	HARNESS, 3000-AB	1219-00-0016	B
		PAGE: 1	

REFERENCE DESIGNATORS	PART DESCRIPTION	ORIG-MFGR-PART-NO	MFGR	WAVETEK NO.	QTY/PT
NONE	TERMINAL, MALE	02-09-2118	MOL	2113-09-0004	4
NONE	PLUG	19-09-2042	MOL	2113-26-0001	1
S201	SWITCH, TOGGLE DPDT	9201P3HZQ	C-K	5106-00-0016	1

WAVETEK PARTS LIST	TITLE	ASSEMBLY NO.	REV
	PWR SW ASSY, 16-1/2	1212-00-0006	
		PAGE: 1	

REFERENCE DESIGNATORS	PART DESCRIPTION	ORIG-MFGR-PART-NO	MFGR	WAVETEK NO.	QTY
C1	CAP, TANT, .47MF, 50V CE113-447	935	TRW	1510-21-9470	1
CR05	DIODE DG000-007	5082-2800	H-P	4809-02-0001	1
CR2 CR3	DIODE DR000-001	1N4004	P-C	4806-01-4004	2
IC1 IC2 IC3	IC, IC000-005	RC4558N8	RAY	7000-14-5800	3
M1	METER, 3 SCALE MI000-004	MI000-004	W-I	2410-06-0001	1
P1	PLUG, 6-PIN KONEKTON MC000-075	09-65-1061	MOL	2112-05-0002	1
R01	POT, 5K, RP130-250	89PR5K	BEK	4610-00-2502	1
R02	RES, C, 1/4W, 5%, 7.5K RC103-275	CF1/4-7.5K	ASE	4700-15-7501	1
R03	RES, MF, 1/8W, 1%, 36.5K RF213-365	MF55K-36.5K	ASE	4701-03-3652	1
R04 R28	RES, C, 1/4W, 5%, 33K RC103-333	CF1/4-33K	ASE	4700-15-3302	2
R05 R06	RES, MF, 1/8W, 1%, 10K RF213-100	MF55K10K	ASE	4701-03-1002	2
R07 R23	RES, C, 1/4W, 5%, 20K RC103-320	CF1/4-20K	ASE	4700-15-2002	2
R08	RES, MF, 1/8W, 1%, 2.74K RF212-274	MF55K-2.74K	ASE	4701-03-2741	1

WAVETEK PARTS LIST	TITLE METER BOARD ASSY C315	ASSEMBLY NO. 1110-00-0294 PAGE: 1	REV H

REFERENCE DESIGNATORS	PART DESCRIPTION	ORIG-MFGR-PART-NO	MFGR	WAVETEK NO.	QTY
R09	RES, MF, 1/8W, 1%, 11.3K RF213-113	MF55K-11.3K	ASE	4701-03-1132	1
R10	RES, MF, 1/8W, 1%, 3.92K RF212-392	MF55K-3.92K	ASE	4701-03-3921	1
R11	POT, MOD, 10K, 10% RP140-310	70AIN048P103U	A-B	4610-11-3103	1
R12 R15 R17 R18 R26	POT, 20K, RP130-320	89PR20K	BEK	4610-00-2203	5
R13	RES, C, 1/4W, 5%, 5.6K RC103-256	CF1/4-5.6K	ASE	4700-15-5601	1
R14	RES, C, 1/4W, 5%, 220K RC103-422	CF1/4220K	ASE	4700-15-2203	1
R16 R20	RES, C, 1/4W, 5%, 10K RC103-310	CF1/4-10K	ASE	4700-15-1002	2
R19	RES, C, 1/4W, 5%, 1M RC103-510	CF1/4-1M	ASE	4700-15-1004	1
R21	RES, MF, 1/8W, 1%, 15.8K RF213-158	MF55K-15.8K	ASE	4701-03-1582	1
R22	POT, 2K, RP130-220	89PR2K	BEK	4610-00-2202	1
R24	RES, C, 1/4W, 5%, 68K RC103-368	CF1/4-68K	ASE	4700-15-6802	1
R25	RES, C, 1/4W, 5%, 100K RC103-410	CF1/4-100K	ASE	4700-15-1003	1

WAVETEK PARTS LIST	TITLE METER BOARD ASSY C315	ASSEMBLY NO. 1110-00-0294 PAGE: 2	REV H

REFERENCE DESIGNATORS	PART DESCRIPTION	ORIG-MFGR-PART-NO	MFGR	WAVETEK NO.	QTY
R27	RES, C, 1/4W, 5%, 15K RC103-315	CF1/4-15K	ASE	4700-15-1502	1
R33	RES, C, 1/4W, 5%, 1.2K RC103-212	CF1/4-1.2K	ASE	4700-15-1201	1
R34	RES, VAR. CERMET, 100 10%	89PR100	BEK	4610-00-2101	1

WAVETEK PARTS LIST	TITLE METER BOARD ASSY C315	ASSEMBLY NO. 1110-00-0294 PAGE: 3	REV H

REFERENCE DESIGNATORS	PART DESCRIPTION	ORIG-MFGR-PART-NO	MFGR	WAVETEK NO.	QTY
C1 C12 C13 C6	CAP, TANT, .47MF, 50V CE113-447	935	TRW	1510-21-9470	4
C10 C4 C9	CAP, MICA, 1000PF, 500V CM101-210	DM15-102J	ARC	1510-50-0102	3
C11	CAP, CER, .001MFD, 1KV CD102-210	5GAD10	SPR	1510-10-1102	1
C14	CAP, CER, .05MF, 100V CD103-350	TG-S50	SPR	1510-10-2503	1
C15	CAP, CER, .01MF, 100V CD103-310	68U103M	MDC	1510-10-2103	1
C16 C17 C18	CAP, TANT, 10MF, 25V CE120-010	162D106X0025DD2	SPR	1510-21-7100	3
C2 C3 C7 C8	CAP, MICA, 470PF, 500V CM101-147	DM15-471J	ARC	1510-50-0471	4
C5	CAP, CER, 330PF, 1KV CD104-133	10TCU-T33	SPR	1510-10-3331	1
CR1 CR2 CR3 CR4 CR5	DIODE DR000-001	1N4004	P-C	4806-01-4004	5
CR6 CR7 CR8	LED DL000-001	NSL5046	NAT	4810-02-0001	3
HH1	HARNESS, MOD BD	WYC317	W-I	1219-00-0284	1
IC01 IC02	DUAL OP AMP, RAYTHEON IC000-027	RC4558NB-RAY	RAY	7000-45-5801	2

REFERENCE DESIGNATORS	PART DESCRIPTION	ORIG-MFGR-PART-NO	MFGR	WAVETEK NO.	QTY
IC3	DUAL OP AMP	RC4558NB	RAY	7000-14-5800	1
IC4	IC IC000-006	MC1455P1	MOT	7000-14-5500	1
J1	CONN, UG911A/U JB109-111	KC79-146	KIN	2110-01-1013	1
OC1	LED, AXIAL VACTROL MP000-002	VTL5C3	VAC	3710-00-0001	1
P1	CONN, MALE, 9-PIN MC000-071	09-65-1091	MOL	2112-05-0001	1
Q1 Q2	TRANS QA054-580	2N5458	MOT	4901-05-4580	2
Q3	TRANS QA038-541 2N3854A	2N3854A	SST	4901-03-8541	1
R1* R17 R30	RES, C, 1/4W, 5%, 270K RC103-427	CF1/4-270K	ASE	4700-15-2703	3
R10 R9	RES, MF, 1/8W, 1%, 340K RF214-340	MF55K-340K	ASE	4701-03-3403	2
R11 R13 R25 R27	RES, C, 1/4W, 5%, 10K RC103-310	CF1/4-10K	ASE	4700-15-1002	4
R12 R26 R3 R54	RES, C, 1/4W, 5%, 100K RC103-410	CF1/4-100K	ASE	4700-15-1003	4
R14	RES, C, 1/4W, 5%, 470K RC103-447	CF1/4-470K	ASE	4700-15-4703	1

REFERENCE DESIGNATORS	PART DESCRIPTION	ORIG-MFGR-PART-NO	MFGR	WAVETEK NO.	QTY
R15*	RES, C, 1/4W, 5%, 390K RC103-439	CF1/4-390K	ASE	4700-15-3903	1
R16 R2 R37 R5	RES, C, 1/4W, 10%, 10M RC104-610	CB1061	A-B	4700-16-1005	4
R18* R4*	RES, C, 1/4W, 10%, 5.6M RC104-556	CB5651	A-B	4700-16-5604	2
R19 R20* R53	RES, C, 1/4W, 10%, 22M RC104-622	CB2261	A-B	4700-16-2205	3
R21* R6*	RES, C, 1/4W, 10%, 4.7M RC104-547	CB4751	A-B	4700-16-4704	2
R22	RES, MF, 1/8W, 1%, 464K RF214-464	MF55K-464K	ASE	4701-03-4643	1
R23 R24	RES, MF, 1/8W, 1%, 845K RF214-845	MF55K-845K	ASE	4701-03-8453	2
R28	RES, C, 1/4W, 5%, 560K RC103-456	CF1/4-560K	ASE	4700-15-5603	1
R29	RES, C, 1/4W, 5%, 7.5K RC103-275	CF1/4-7.5K	ASE	4700-15-7501	1
R31	RES, MF, 1/8W, 1%, 4.87K RF212-487	MF55K-4.87K	ASE	4701-03-4871	1
R32 R42 R47	POT, 1K, RP129-210	360S102B	CTS	4610-00-1102	3
R33	RES, MF, 1/8W, 1%, 12.1K RF213-121	MF55K-12.1K	ASE	4701-03-1212	1

REFERENCE DESIGNATORS	PART DESCRIPTION	ORIG-MFGR-PART-NO	MFGR	WAVETEK NO.	QTY
R34 R35 R7*	RES, C, 1/4W, 5%, 1M RC103-510	CF1/4-1M	ASE	4700-15-1004	3
R36	POT, 20K, RP129-320	360S203B	CTS	4610-00-1203	1
R38	RES, C, 1/4W, 5%, 47K RC103-347	CF1/4-47K	ASE	4700-15-4702	1
R39	RES, C, 1/4W, 5%, 18K RC103-318	CF1/4-18K	ASE	4700-15-1802	1
R40*	RES, C, 1/4W, 5%, 680K RC103-468	CF1/4-680K	ASE	4700-15-6803	1
R41	RES, MF, 1/8W, 1%, 2.74K RF212-274	MF55K-2.74K	ASE	4701-03-2741	1
R43	RES, MF, 1/8W, 1%, 5.11K RF212-511	MF55K-5.11K	ASE	4701-03-5111	1
R44	RES, SLIDETROL, 10K PER B/P	RP137-310	W-I	4610-12-9103	1
R45	RES, C, 1/4W, 5%, 33 RC103-033	CF1/4-33	ASE	4700-15-3309	1
R46 R8	RES, MF, 1/8W, 1%, 178K RF214-178	MF55K-178K	ASE	4701-03-1783	2
R48	RES, MF, 1/8W, 1%, 1.50K RF212-150	MF55K-1.50K	ASE	4701-03-1501	1

REFERENCE DESIGNATORS	PART DESCRIPTION	ORIG-MFGR-PART-NO	MFGR	WAVETEK NO.	QTY
R49	RES, C, 1/4W, 5%, 1K RC103-210	CF1/4-1K	ASE	4700-15-1001	1
R50	RES, C, 1/4W, 5%, 200 RC103-120	CF1/4-200	ASE	4700-15-2000	1
R51	RES, C, 1/4W, 5%, 4.7K RC103-247	CF1/4-4.7K	ASE	4700-15-4701	1
R52	RES, C, 1/4W, 5%, 330 RC103-133	CF1/4-330	ASE	4700-15-3300	1
R55	RES, C, 1/4W, 10%, 47M RC104-647	CB4761	A-B	4700-16-4705	1
R56	RES, C, 1/4W, 5%, 620 RC103-162	CF1/4-620	ASE	4700-15-6200	1
S1 S2	LEVER SWITCH FROM: 5101-00-0007	SL000-003	W-I	5101-00-0003	2

REFERENCE DESIGNATORS	PART DESCRIPTION	ORIG-MFGR-PART-NO	MFGR	WAVETEK NO.	QTY
F101	FUSE, SLO BLO, 1 AMP, 250V	MDL-1	BUS	2410-05-0005	1
IC101	POS, VOLTAGE REG.	LM317T	NAT	7000-03-1700	1
J101	CONN, 6-PIN, KONEKTON MC000-076	09-50-3061	MOL	2113-06-0002	1
J201	RECEPTACLE	19-09-1042	MOL	2113-26-0002	1
18	CONTACT, MC000-131	08-50-0106	MOL	2113-07-0002	5
Q101 Q102	PROT PWR DARLINGTON	LM395T	NAT	4902-00-3950	2
S101	SWITCH, SLIDE, DPDT	EPSI-SLI	S-I	5105-00-0011	1
T101	XFMR, PWR	8720	A-M	5610-00-0027	1
23	PC ASSEMBLY, DPS2A	1218-00-0250	W-I	1218-00-0250	1
24	LINE CORD ASSEMBLY	1219-00-0144	W-I	1219-00-0144	1

WAVETEK PARTS LIST	TITLE POWER SUPPLY, DPS2A	ASSEMBLY NO. 1115-00-0011 PAGE: 1	REV C

REFERENCE DESIGNATORS	PART DESCRIPTION	ORIG-MFGR-PART-NO	MFGR	WAVETEK NO.	QTY
C02 C06	CAP, CER, .005MF, 100V	TG-D50	SPR	1510-10-2502	2
C02 C06	CAP, CER, .005MF, 100V	TG-D50	SPR	1510-10-2502	2
C03 C05 C07	CAP, ELECT, 1MF, 25V CE120-001	162D105X9025BC2	SPR	1510-21-7010	3
C04 C09	CAP, ELECT, 100MF, 25V CE105-110	TE1211	SPR	1510-20-4101	2
C10	CAP, 10000MF, 16V CE122-310	D76381	SPR	1510-21-4103	1
C11	CAP, TANT, 10MF, 25V CE120-010	162D106X0025DD2	SPR	1510-21-7100	1
CR01	DIODE BRIDGE	MDA101	MOT	4806-02-0003	1
CR02 CR04	DIODE DG109-140	1N4148	FCD	4807-01-0914	2
CR03 CR05 CR08	DIODE DR000-001	1N4004	P-C	4806-01-4004	3
CR06 CR07	DIODE DR000-009	1N5624	G-E	4806-01-5624	2
F01	FUSE, S.B., 2AMP MF000-002	313-002	LIT	2410-05-0001	1
IC01	VOLTAGE REFERENCE	REF-02CJ	PMI	7000-00-0200	1
IC02	DUAL OP AMP	TL082CP	T-I	7000-00-8200	1
J01 J02 J03	CONN., RECEPT., 3-PIN	6-86105-3	AMP	2112-25-0001	3

WAVETEK PARTS LIST	TITLE PC ASSEMBLY, DPS2A	ASSEMBLY NO. 1218-00-0250 PAGE: 1	REV C

REFERENCE DESIGNATORS	PART DESCRIPTION	ORIG-MFGR-PART-NO	MFGR	WAVETEK NO.	QTY
P01	PLUG, 6-PIN KONEKTON MC000-075	09-65-1061	MOL	2112-05-0002	1
P02	CONN, MALE, 9-PIN MC000-071	09-65-1091	MOL	2112-05-0001	1
Q01	JFET, N-CHANNEL	E232	SCX	4902-00-2320	1
Q02	TRANS QA039-060	2N3906	T-I	4901-03-9060	1
R01 R12 R14	RES, C, 1/4W, 5%, 4.7K RC103-247	CF1/4-4.7K	ASE	4700-15-4701	3
R02	RES, C, 1/4W, 5%, 1K RC103-210	CF1/4-1K	ASE	4700-15-1001	1
R03	RES, C, 1/4W, 5%, 39K RC103-339	CF1/4-39K	ASE	4700-15-3902	1
R04	RES, MF, 1/8W, 1%, 4.87K RF212-487	MF55K-4.87K	ASE	4701-03-4871	1
R05	RES, VAR. CERMET, 500	89PR500	BEK	4610-00-2501	1
R06	RES, C, 1/4W, 5%, 3.9K RC103-239	CF1/43.9K	ASE	4700-15-3901	1
R08	RES, MF, 1/8W, 1%, 13.0K RF213-130	MF55K-13.0K	ASE	4701-03-1302	1
R09 R11	RES, MF, 1/8W, 1%, 10K RF213-100	MF55K10K	ASE	4701-03-1002	2

REFERENCE DESIGNATORS	PART DESCRIPTION	ORIG-MFGR-PART-NO	MFGR	WAVETEK NO.	QTY
R10	RES., VAR. CERMET 200-OHM	89PR200	BEK	4610-00-2201	1
R13	RES, C, 1/4W, 5%, 10K RC103-310	CF1/4-10K	ASE	4700-15-1002	1
R15	RES, C, 1/4W, 5%, 1.2K RC103-212	CF1/4-1.2K	ASE	4700-15-1201	1
R16	RES., M.F., 1/8W, 1%, 150-OHM	MF55K-150	ASE	4701-03-1500	1
R18	RES., M.F., 1/8W, 1%, 768-OHM	MF55K-768	ASE	4701-03-7680	1

REFERENCE DESIGNATORS	PART DESCRIPTION	ORIG-MFGR-PART-NO	MFGR	WAVETEK NO.	QTY
6	TERM, FEMALE MC000-136	02-09-1118	MOL	2113-09-0003	4
P202	CORD SET, 18/3SVT, 6FT GRY, MLD. CAP, UL-APPRV	17237SVT	BEL	6011-80-0001	1

REFERENCE DESIGNATORS	PART DESCRIPTION	ORIG-MFGR-PART-NO	MFGR	WAVETEK NO.	QTY
R15*	RES, C, 1/4W, 5%, 390K RC103-439	CF1/4-390K	ASE	4700-15-3903	1
R16 R2 R37 R5	RES, C, 1/4W, 10%, 10M RC104-610	CB1061	A-B	4700-16-1005	4
R18* R4*	RES, C, 1/4W, 10%, 5.6M RC104-556	CB5651	A-B	4700-16-5604	2
R19 R20* R53	RES, C, 1/4W, 10%, 22M RC104-622	CB2261	A-B	4700-16-2205	3
R21* R6*	RES, C, 1/4W, 10%, 4.7M RC104-547	CB4751	A-B	4700-16-4704	2
R22	RES, MF, 1/8W, 1%, 464K RF214-464	MF55K-464K	ASE	4701-03-4643	1
R23 R24	RES, MF, 1/8W, 1%, 845K RF214-845	MF55K-845K	ASE	4701-03-8453	2
R28	RES, C, 1/4W, 5%, 560K RC103-456	CF1/4-560K	ASE	4700-15-5603	1
R29	RES, C, 1/4W, 5%, 7.5K RC103-275	CF1/4-7.5K	ASE	4700-15-7501	1
R31	RES, MF, 1/8W, 1%, 4.87K RF212-487	MF55K-4.87K	ASE	4701-03-4871	1
R32 R42 R47	POT, 1K, RP129-210	360S102B	CTS	4610-00-1102	3
R33	RES, MF, 1/8W, 1%, 12.1K RF213-121	MF55K-12.1K	ASE	4701-03-1212	1

REFERENCE DESIGNATORS	PART DESCRIPTION	ORIG-MFGR-PART-NO	MFGR	WAVETEK NO.	QTY
R34 R35 R7*	RES, C, 1/4W, 5%, 1M RC103-510	CF1/4-1M	ASE	4700-15-1004	3
R36	POT, 20K, RP129-320	360S203B	CTS	4610-00-1203	1
R38	RES, C, 1/4W, 5%, 47K RC103-347	CF1/4-47K	ASE	4700-15-4702	1
R39	RES, C, 1/4W, 5%, 18K RC103-318	CF1/4-18K	ASE	4700-15-1802	1
R40*	RES, C, 1/4W, 5%, 680K RC103-468	CF1/4-680K	ASE	4700-15-6803	1
R41	RES, MF, 1/8W, 1%, 2.74K RF212-274	MF55K-2.74K	ASE	4701-03-2741	1
R43	RES, MF, 1/8W, 1%, 5.11K RF212-511	MF55K-5.11K	ASE	4701-03-5111	1
R44	RES, SLIDETROL, 10K PER B/P	RP137-310	W-I	4610-12-9103	1
R45	RES, C, 1/4W, 5%, 33 RC103-033	CF1/4-33	ASE	4700-15-3309	1
R46 R8	RES, MF, 1/8W, 1%, 178K RF214-178	MF55K-178K	ASE	4701-03-1783	2
R48	RES, MF, 1/8W, 1%, 1.50K RF212-150	MF55K-1.50K	ASE	4701-03-1501	1

REFERENCE DESIGNATORS	PART DESCRIPTION	ORIG-MFGR-PART-NO	MFGR	WAVETEK NO.	QTY
R49	RES, C, 1/4W, 5%, 1K RC103-210	CF1/4-1K	ASE	4700-15-1001	1
R50	RES, C, 1/4W, 5%, 200 RC103-120	CF1/4-200	ASE	4700-15-2000	1
R51	RES, C, 1/4W, 5%, 4.7K RC103-247	CF1/4-4.7K	ASE	4700-15-4701	1
R52	RES, C, 1/4W, 5%, 330 RC103-133	CF1/4-330	ASE	4700-15-3300	1
R55	RES, C, 1/4W, 10%, 47M RC104-647	CB4761	A-B	4700-16-4705	1
R56	RES, C, 1/4W, 5%, 620 RC103-162	CF1/4-620	ASE	4700-15-6200	1
S1 S2	LEVER SWITCH FROM: 5101-00-0007	SL000-003	W-I	5101-00-0003	2

REFERENCE DESIGNATORS	PART DESCRIPTION	ORIG-MFGR-PART-NO	MFGR	WAVETEK NO.	QTY
F101	FUSE, SLO BLO, 1 AMP, 250V	MDL-1	BUS	2410-05-0005	1
IC101	POS, VOLTAGE REG.	LM317T	NAT	7000-03-1700	1
J101	CONN, 6-PIN, KONEKTON MC000-076	09-50-3061	MOL	2113-06-0002	1
J201	RECEPTACLE	19-09-1042	MOL	2113-26-0002	1
18	CONTACT, MC000-131	08-50-0106	MOL	2113-07-0002	5
Q101 Q102	PROT PWR DARLINGTON	LM395T	NAT	4902-00-3950	2
S101	SWITCH, SLIDE, DPDT	EPSI-SLI	S-I	5105-00-0011	1
T101	XFMR, PWR	8720	A-M	5610-00-0027	1
23	PC ASSEMBLY, DPS2A	1218-00-0250	W-I	1218-00-0250	1
24	LINE CORD ASSEMBLY	1219-00-0144	W-I	1219-00-0144	1

WAVETEK PARTS LIST	TITLE	ASSEMBLY NO.	REV
	POWER SUPPLY, DPS2A	1115-00-0011	C
		PAGE: 1	

REFERENCE DESIGNATORS	PART DESCRIPTION	ORIG-MFGR-PART-NO	MFGR	WAVETEK NO.	QTY
C02 C06	CAP, CER, .005MF, 100V	TG-D50	SPR	1510-10-2502	2
C02 C06	CAP, CER, .005MF, 100V	TG-D50	SPR	1510-10-2502	2
C03 C05 C07	CAP, ELECT, 1MF, 25V CE120-001	162D105X9025BC2	SPR	1510-21-7010	3
C04 C09	CAP, ELECT, 100MF, 25V CE105-110	TE1211	SPR	1510-20-4101	2
C10	CAP, 10000MF, 16V CE122-310	D76381	SPR	1510-21-4103	1
C11	CAP, TANT, 10MF, 25V CE120-010	162D106X0025DD2	SPR	1510-21-7100	1
CR01	DIODE BRIDGE	MDA101	MOT	4806-02-0003	1
CR02 CR04	DIODE DG109-140	1N4148	FCD	4807-01-0914	2
CR03 CR05 CR08	DIODE DR000-001	1N4004	P-C	4806-01-4004	3
CR06 CR07	DIODE DR000-009	1N5624	G-E	4806-01-5624	2
F01	FUSE, S.B., 2AMP MF000-002	313-002	LIT	2410-05-0001	1
IC01	VOLTAGE REFERENCE	REF-02CJ	PMI	7000-00-0200	1
IC02	DUAL OP AMP	TL082CP	T-I	7000-00-8200	1
J01 J02 J03	CONN., RECEPT., 3-PIN	6-86105-3	AMP	2112-25-0001	3

WAVETEK PARTS LIST	TITLE	ASSEMBLY NO.	REV
	PC ASSEMBLY, DPS2A	1218-00-0250	C
		PAGE: 1	

REFERENCE DESIGNATORS	PART DESCRIPTION	ORIG-MFGR-PART-NO	MFGR	WAVETEK NO.	QTY
P01	PLUG, 6-PIN KONEKTON MC000-075	09-65-1061	MOL	2112-05-0002	1
P02	CONN, MALE, 9-PIN MC000-071	09-65-1091	MOL	2112-05-0001	1
Q01	JFET, N-CHANNEL	E232	SCX	4902-00-2320	1
Q02	TRANS QA039-060	2N3906	T-I	4901-03-9060	1
R01 R12 R14	RES, C, 1/4W, 5%, 4.7K RC103-247	CF1/4-4.7K	ASE	4700-15-4701	3
R02	RES, C, 1/4W, 5%, 1K RC103-210	CF1/4-1K	ASE	4700-15-1001	1
R03	RES, C, 1/4W, 5%, 39K RC103-339	CF1/4-39K	ASE	4700-15-3902	1
R04	RES, MF, 1/8W, 1%, 4.87K RF212-487	MF55K-4.87K	ASE	4701-03-4871	1
R05	RES, VAR. CERMET, 500	89PR500	BEK	4610-00-2501	1
R06	RES, C, 1/4W, 5%, 3.9K RC103-239	CF1/43.9K	ASE	4700-15-3901	1
R08	RES, MF, 1/8W, 1%, 13.0K RF213-130	MF55K-13.0K	ASE	4701-03-1302	1
R09 R11	RES, MF, 1/8W, 1%, 10K RF213-100	MF55K10K	ASE	4701-03-1002	2

REFERENCE DESIGNATORS	PART DESCRIPTION	ORIG-MFGR-PART-NO	MFGR	WAVETEK NO.	QTY
R10	RES., VAR. CERMET 200-OHM	89PR200	BEK	4610-00-2201	1
R13	RES, C, 1/4W, 5%, 10K RC103-310	CF1/4-10K	ASE	4700-15-1002	1
R15	RES, C, 1/4W, 5%, 1.2K RC103-212	CF1/4-1.2K	ASE	4700-15-1201	1
R16	RES., M.F., 1/8W, 1%, 150-OHM	MF55K-150	ASE	4701-03-1500	1
R18	RES., M.F., 1/8W, 1%, 768-OHM	MF55K-768	ASE	4701-03-7680	1

REFERENCE DESIGNATORS	PART DESCRIPTION	ORIG-MFGR-PART-NO	MFGR	WAVETEK NO.	QTY
6	TERM, FEMALE MC000-136	02-09-1118	MOL	2113-09-0003	4
P202	CORD SET, 18/3SVT, 6FT GRY, MLD. CAP, UL-APPRV	17237SVT	BEL	6011-80-0001	1

REFERENCE DESIGNATORS	PART DESCRIPTION	ORIG-MFGR-PART-NO	MFGR	WAVETEK NO.	QTY
C01 C04 C22 C23	CAP, F.T., 6.8PF CF102-R68	54-794-010-6892	SPEC	1510-30-1689	4
C02	CAP, F.T., 470PF CF101-147	FA5C-4712	A-B	1510-30-0471	1
C03	CAP, F.T., 120PF CF102-112	54-794-001-121K	SPEC	1510-30-1121	1
C05	CAP, Q-C, 2.0PF, 10% CG101-220	QC-2.0PF	Q-C	1510-40-0020	1
C06 C07 C08 C09 C24 C38 C40 C41 C42	CAP, TANT, .47MF, 50V CE113-447	935	TRW	1510-21-9470	9
C10 C11 C12 C20 C21 C26 C28 C36 C43 C46	CAP, FT, CER, 100PF, 20% CF104-110	4420-100PF	AER	1510-30-3101	10
C13	CAP., CHIP, .1 MF	51C1209-B104Z	CFI	1510-00-3104	1
C14 C15 C16 C17 C32 C33 C34	CAP, Q-C, 10PF, 10%, CG101-310	QC-10PF	Q-C	1510-40-0100	7
C18 C35	CAP, CER, 120PF, 1KV CD102-112	60U121M	MDC	1510-10-1121	2
C19	CAP, CER, .02UF, 100V	TQ-S20	SPR	1510-10-2203	1
C25	CAP, FT, 500PF, 20%250V CF104-150	4420-500PF	AER	1510-30-3501	1
C27	CAP, Q.C., 1PF CG101-210	QC-1PF	Q-C	1510-40-0010	1

REFERENCE DESIGNATORS	PART DESCRIPTION	ORIG-MFGR-PART-NO	MFGR	WAVETEK NO.	QTY
C29	CAP, Q.C., .75PF CG101-175	QC-.75PF	Q-C	1510-40-0758	1
C30	CAP, CHIP, 1PF, 100V CC101-R10	3BN100S1R0C(S)	VAR	1510-00-0010	1
C31	CAP, Q.C., 3PF CG101-230	QC-3PF	Q-C	1510-40-0030	1
C37 C39	CAP, CER, F.T. 1000PF CF112-210	54-794-010-102P	SPEC	1510-30-8102	2
C44	CAP, CER, 100PF, 1KV CD102-110	60U101M	MDC	1510-10-1101	1
CR01 CR02 CR03 CR04 CR09	DIODE DC000-008	BB205B	APX	4803-02-0004	5
CR05 CR07 CR10	DIODE DP000-040	MA47980	M-A	4805-02-0001	3
CR06 CR08 CR11	DIODE, 1N82 MITEK PRE-TESTED, 40UA	1N82-PRE-TEST	MTK	4807-03-0003	3
IC1 IC2 IC3 IC4	OP AMP	N5741T	SIG	7000-57-4101	4
J1 J2 J201	CONN JF000-005	37JR116-1	S-C	2110-03-0002	3
L01 L21 L22	TOROID	LA009-010-1	HYT	1810-05-0004	3
L02	TOROID, 10 TURN	LA009-010-2	HYT	1810-05-0005	1
L03 L04 L07 L08 L11 L12 L14 L15 L16 L17 L20	RF CHOKE	CHOKE	W-I	1819-99-9999	11

REFERENCE DESIGNATORS	PART DESCRIPTION	ORIG-MFGR-PART-NO	MFGR	WAVETEK NO.	QTY
L05 L09 L10 L13 L18 L19	CHOKE .22MH 10% LA005-R02	08NR22K	ASE	1810-03-0228	6
L06	CHOKE, .22MH, 10% LA008-R02	506-000022V1	SYS	1810-04-0228	1
L23	TOROID, 4 TURN	LA009-004-1	HYT	1810-05-0003	1
NONE	RES, C, 1/4W, 10%, 4.7K RC104-247AB	CB4721	A-B	4705-16-4701	1
Q05	TRANS QB000-018	SD1006	SSS	4902-01-0060	1
Q1	TRANS QB000-013	A430	APX	4902-00-4300	1
Q2	TRANS QA054-580	2N5458	MOT	4901-05-4580	1
Q3 Q4 Q6 Q7	TRANS QA050-530	2N5053	APX	4901-05-0530	4
R01 R14	RES, C, 1/4W, 5%, 12K RC103-312	CF1/4-12K	ASE	4700-15-1202	2
R02 R38	POT, 5K, RP130-250	89PR5K	BEK	4610-00-2502	2
R03	RES, C, 1/4W, 5%, 100 RC103-110	CF1/4-100	ASE	4700-15-1000	1
R04 R27 R29 R42 R60	RES, C, 1/4W, 5%, 2.2K RC103-222	CF1/4-2.2K	ASE	4700-15-2201	5
R05	RES, C, 1/4W, 5%, 330 RC103-133	CF1/4-330	ASE	4700-15-3300	1

REFERENCE DESIGNATORS	PART DESCRIPTION	ORIG-MFGR-PART-NO	MFGR	WAVETEK NO.	QTY
R06 R40	RES, C, 1/4W, 5%, 47K RC103-347	CF1/4-47K	ASE	4700-15-4702	2
R07	RES, C, 1/4W, 10%, 10M RC104-610	CB1061	A-B	4700-16-1005	1
R08	RES, C, 1/4W, 5%, 33K RC103-333	CF1/4-33K	ASE	4700-15-3302	1
R09	RES, C, 1/4W, 5%, 10 RC103-010	CF1/4-10	ASE	4700-15-1009	1
R10	RES, C, 1/4W, 5%, 680 RC103-168	CF1/4-680	ASE	4700-15-6800	1
R11 R15	RES, C, 1/4W, 5%, 8.2K RC103-282	CF1/4-8.2K	ASE	4700-15-8201	2
R12 R13	RES, C, 1/4W, 5%, 1K RC103-210	CF1/4-1K	ASE	4700-15-1001	2
R16 R22 R28 R32 R33 R34 R50 R54 R59 R61	RES, C, 1/4W, 5%, 10K RC103-310	CF1/4-10K	ASE	4700-15-1002	10
R17 R20 R23 R37 R39 R48 R51 R55	RES, C, 1/4W, 5%, 4.7K RC103-247	CF1/4-4.7K	ASE	4700-15-4701	8
R18 R24 R52 R56	RES, C, 1/4W, 5%, 560 RC103-156	CF1/4-560	ASE	4700-15-5600	4
R19 R21 R49 R53	RES, C, 1/4W, 5%, 470 RC103-147	CF1/4-470	ASE	4700-15-4700	4

REFERENCE DESIGNATORS	PART DESCRIPTION	ORIG-MFGR-PART-NO	MFGR	WAVETEK NO.	QTY
R25 R46	POT, 20K, RP130-320	89PR20K	BEK	4610-00-2203	2
R26 R31	RES, C, 1/4W, 5%, 470K RC103-447	CF1/4-470K	ASE	4700-15-4703	2
R30 R57	POT, 20K, RP129-320	3608203B	CTS	4610-00-1203	2
R35 R62	RES, C, 1/2W, 5%, 47 RC105-047	EB4705	A-B	4705-25-4709	2
R36 R63	RES, C, 1/4W, 5%, 47 RC103-047	CF1/4-47	ASE	4700-15-4709	2
R41 R58	RES, C, 1/4W, 5%, 100K RC103-410	CF1/4-100K	ASE	4700-15-1003	2
R43	RES, C, 1/4W, 5%, 5.6K RC103-256	CF1/4-5.6K	ASE	4700-15-5601	1
R44	RES, C, 1/2W, 5%, 150 RC105-115	CF1/2-150	ASE	4700-25-1500	1
R45	RES, C, 1/4W, 5%, 3.9K RC103-239	CF1/43.9K	ASE	4700-15-3901	1
R47	RES, C, 1/4W, 5%, 1.2K RC103-212	CF1/4-1.2K	ASE	4700-15-1201	1
R64	RES, C, 1/4W, 5%, 270 RC103-127	CF1/4-270	ASE	4700-15-2700	1
R65	RES, C, 1/4W, 10%, 1.2K	CB1221	A-B	4705-16-1201	1

REFERENCE DESIGNATORS	PART DESCRIPTION	ORIG-MFGR-PART-NO	MFGR	WAVETEK NO.	QTY
R66	RES. 1/4, 5%, 6.2K A-B RC103-262AB	CB6225	A-B	4705-15-6201	1
R68	RES, C, 1/4W, 5%, 3.3K RC103-233	CF1/4-3.3K	ASE	4700-15-3301	1
31	RF MIXER ASSY	A500-319	W-I	1219-00-0055	1
30	RF PRE AMP ASSY	A500-318	W-I	1219-00-0054	1

REFERENCE DESIGNATORS	PART DESCRIPTION	ORIG-MFGR-PART-NO	MFGR	WAVETEK NO.	QTY
C101	CAP, Q-C, 2.4PF, 10% CQ101-224	QC-2.4PF	Q-C	1510-40-0249	1
MX101	DIODE, QUAD, BAL MIXER	5082-2830	H-P	4899-02-0001	1
T101	RF XFMR FROM: 1813-00-0007	TR001-003	W-I	1210-40-0003	1
T102	RF XFMR FROM: 1813-00-0008	TR002-001	W-I	1210-41-0001	1

REFERENCE DESIGNATORS	PART DESCRIPTION	ORIG-MFGR-PART-NO	MFGR	WAVETEK NO.	QTY
C201 C205	CAP, TANT, .47MF, 50V CE113-447	935	TRW	1510-21-9470	2
C202	CAP, ELECT, 1MF, 25V CE120-001	162D105X9025BC2	SPR	1510-21-7010	1
C203 C204	CAP, FT, 500PF, 20%250V CF104-150	4420-500PF	AER	1510-30-3501	2
C206	CAP, Q-C, 2.0PF, 10% CQ101-220	QC-2.0PF	Q-C	1510-40-0020	1
CR201	DIODE DB000-001	HW6.8B	MSP	4801-02-0001	1
L201 L203	RF CHOKE	CHOKE	W-I	1819-99-9999	2
L202	CHOKE .22MH 10% LA005-R02	08NR22K	ASE	1810-03-0228	1
L204	TOROID, 10T, 1/16 INSL	LA-009-010-3	HYT	1810-05-0006	1
Q201 Q202 Q203	TRANS QA050-530	2N5053	APX	4901-05-0530	3
R201	RES, C, 1/4W, 5%, 100 RC103-110	CF1/4-100	ASE	4700-15-1000	1
R202	RES, C, 1/4W, 5%, 470 RC103-147	CF1/4-470	ASE	4700-15-4700	1
R203	RES, C, 1/4W, 5%, 330 RC103-133	CF1/4-330	ASE	4700-15-3300	1

REFERENCE DESIGNATORS	PART DESCRIPTION	ORIG-MFGR-PART-NO	MFGR	WAVETEK NO.	QTY
R204	RES, C, 1/4W, 5%, 4.7K RC103-247	CF1/4-4.7K	ASE	4700-15-4701	1
R205 R206	RES, C, 1/4W, 5%, 47 RC103-047	CF1/4-47	ASE	4700-15-4709	2
R207	RES, C, 1/4W, 5%, 150 RC103-115	CF1/4-150	ASE	4700-15-1500	1

REFERENCE DESIGNATORS	PART DESCRIPTION	ORIG-MFGR-PART-NO	MFGR	WAVETEK NO.	QTY
C01	CAP, CER, 200PF, 1KV CD102-120	5GA-T20	SPR	1510-10-1201	1
C02	CAP, G-C, 2.4PF, 10% CG101-224	GC-2.4PF	G-C	1510-40-0249	1
C03 C20 C22	CAP., CHIP, .1 MF	51C1209-B104Z	CFI	1510-00-3104	3
C07	CAP, TANT, 10MF, 25V CE120-010	162D106X0025DD2	SPR	1510-21-7100	1
C08 C09 C14 C15	CAP, FT, CER, 100PF, 20% CF104-110	4420-100PF	AER	1510-30-3101	4
C11 C12 C16 C24	CAP, CER, F.T. 1000PF CF112-210	54-794-010-102P	SPEC	1510-30-8102	4
C17	CAP, F.T., 6.8PF CF102-R68	54-794-010-6892	SPEC	1510-30-1689	1
C21	CAP, FT, 500PF, 20%250V CF104-150	4420-500PF	AER	1510-30-3501	1
CR02 CR03	DIODE DP000-050	5082-3080	H-P	4805-02-0002	2
CR05	DIODE SELECTED FROM: 4809-02-0001	4889-00-0002	W-I	4889-00-0002	1
J01 J03	CONN JF000-005	37JR116-1	S-C	2110-03-0002	2
L01 L10	CHOKE, 47MH, 10% LA005-047	08N470K	ASE	1810-03-0470	2

REFERENCE DESIGNATORS	PART DESCRIPTION	ORIG-MFGR-PART-NO	MFGR	WAVETEK NO.	QTY
L03 L06 L07 L08	TOROID	LA009-010-1	HYT	1810-05-0004	4
L11	CHOKE, 33MH, 10% LA005-033	08N330	ASE	1810-03-0330	1
L22	RF CHOKE	CHOKE	W-I	1819-99-9999	1
Q01	TRANS QB000-034	BFR94	APX	4902-00-0940	1
R01*	RES, C, 1/4W, 5%, 120 RC103-112	CF1/4-120	ASE	4700-15-1200	1
R02	RES, C, 1/4W, 5%, 330 RC103-133	CF1/4-330	ASE	4700-15-3300	1
R05	RES, C, 1/2W, 5%, 470 RC105-147	CF1/2-470	ASE	4700-25-4700	1
R06	RES, C, 1/8W, 5%, 1K RC101-210	CF1/8-1K	ASE	4700-05-1001	1
R07 R08 R09	RES, C, 1/4W, 5%, 56 RC103-056	CF1/4-56	ASE	4700-15-5609	3
R10	RES, C, 1/4W, 5%, 160OHM	CF1/4-160	ASE	4700-15-1600	1
R14	RES, C, 1/4W, 5%, 47 RC103-047	CF1/4-47	ASE	4700-15-4709	1
R16*	RES, C, 1/8W, 5%, 120	CF1/8-120	ASE	4700-05-1200	1
R17	RES, C, 1/4W, 5%, 2.7K	CF1/4-2.7K	ASE	4700-15-2701	1
22	AMP BD	1218-00-0600	W-I	1218-00-0600	1
23	LEV BD	1218-00-0610	W-I	1218-00-0610	1

REFERENCE DESIGNATORS	PART DESCRIPTION	ORIG-MFGR-PART-NO	MFGR	WAVETEK NO.	QTY
C101 C105 C109	CAP, CHIP, 1PF, 100V CC101-R10	3BN100S1R0C(S)	VAR	1510-00-0010	3
C102 C103 C106 C107 C110 C111 C115 C116 C117	CAP., CHIP, .1 MF	51C1209-B104Z	CFI	1510-00-3104	9
C104	CAP, CER, 1200PF, 1KV CD102-212	5GA-D12	SPR	1510-10-1122	1
C108 C113 C114	CAP, CER, .01MF, 100V CD103-310	68U103M	MDC	1510-10-2103	3
L101 L102 L103	CHOKE, 33MH, 10% LA005-033	08N330	ASE	1810-03-0330	3
L104	CHOKE .22MH 10% LA005-R02	08NR22K	ASE	1810-03-0228	1
Q101 Q102	TRANS MCRWV	NE02135	NEC	4902-02-1350	2
Q103	TRANS, 200MW, 2GHZ	NE41635D	NEC	4902-41-6354	1
R101 R108 R115	RES, C, 1/8W, 5%, 1K RC101-210	CF1/8-1K	ASE	4700-05-1001	3
R102 R106 R109* R113* R116 R120	RES, C, 1/8W, 5%, 120	CF1/8-120	ASE	4700-05-1200	6
R103 R104 R110 R111 R117 R118	RES, C, 1/8W, 5%, 24	CF1/8-24	ASE	4700-05-2409	6
R105 R112 R119	RES, C, 1/8W, 5%, 6.8K	CF1/8-6.8K	ASE	4700-05-6801	3

WAVETEK PARTS LIST	TITLE AMP BD	ASSEMBLY NO. 1218-00-0600 PAGE: 1	REV

REFERENCE DESIGNATORS	PART DESCRIPTION	ORIG-MFGR-PART-NO	MFGR	WAVETEK NO.	QTY
R107 R114	RES, C, 1/4W, 5%, 470 RC103-147	CF1/4-470	ASE	4700-15-4700	2
R121 R122	RES, C, 1/4W, 5%, 390 RC103-139	CF1/4-390	ASE	4700-15-3900	2
R123*	RES, C, 1/4W, 5%, 47 RC103-047	CF1/4-47	ASE	4700-15-4709	1

WAVETEK PARTS LIST	TITLE AMP BD	ASSEMBLY NO. 1218-00-0600 PAGE: 2	REV

REFERENCE DESIGNATORS	PART DESCRIPTION	ORIG-MFGR-PART-NO	MFGR	WAVETEK NO.	QTY
C201	CAP, CER, .001MFD, 1KV CD102-210	5GAD10	SPR	1510-10-1102	1
C203*	CAP, CER, 470PF, 1KV CD102-147	60U471M	MDC	1510-10-1471	1
C204	CAP, CER, 100PF, 1KV CD102-110	60U101M	MDC	1510-10-1101	1
C205 C206	CAP, TANT, 10MF, 25V CE120-010	162D106X0025DD2	SPR	1510-21-7100	2
C207	CAP, MON, 1MF, 50V, 20%	3420-050-E105M	AER	1510-11-3105	1
C208	CAP, CER, .05MF, 100V CD103-350	TG-S50	SPR	1510-10-2503	1
CR201	DIODE DG000-007	5082-2800	H-P	4809-02-0001	1
CR202 CR203 CR204	DIODE DG109-140	1N4148	T-I	4807-01-0914	3
IC201	OP AMP, DUAL, 10 MHZ	NE5533AN	SIG	7000-55-3300	1
Q201	TRANS QA039-060	2N3906	T-I	4901-03-9060	1
R201	RES, C, 1/4W, 5%, 1K RC103-210	CF1/4-1K	ASE	4700-15-1001	1
R202 R203	RES, C, 1/4W, 5%, 560K RC103-456	CF1/4-560K	ASE	4700-15-5603	2
R204	RES, C, 1/4W, 5%, 10K RC103-310	CF1/4-10K	ASE	4700-15-1002	1

WAVETEK PARTS LIST	TITLE	ASSEMBLY NO.	REV
	LEV BD	1218-00-0610	D
		PAGE: 1	

REFERENCE DESIGNATORS	PART DESCRIPTION	ORIG-MFGR-PART-NO	MFGR	WAVETEK NO.	QTY
R204 R207 R208 R214	RES, C, 1/4W, 5%, 22K RC103-322	CF1/422K	ASE	4700-15-2202	4
R204	RES, C, 1/4W, 5%, 10K RC103-310	CF1/4-10K	ASE	4700-15-1002	1
R204 R207 R208 R214	RES, C, 1/4W, 5%, 22K RC103-322	CF1/422K	ASE	4700-15-2202	4
R206	RES, C, 1/4W, 5%, 18K RC103-318	CF1/4-18K	ASE	4700-15-1802	1
R209	RES, C, 1/4W, 5%, 2.2K RC103-222	CF1/4-2.2K	ASE	4700-15-2201	1
R210	RES, C, 1/4W, 5%, 15K RC103-315	CF1/4-15K	ASE	4700-15-1502	1
R211	RES, C, 1W, 5%, 20 OHM	GB2005	AB	4700-35-2009	1
R212	RES, C, 1/4W, 5%, 12K RC103-312	CF1/4-12K	ASE	4700-15-1202	1

WAVETEK PARTS LIST	TITLE	ASSEMBLY NO.	REV
	LEV BD	1218-00-0610	D
		PAGE: 2	

REFERENCE DESIGNATORS	PART DESCRIPTION	ORIG-MFGR-PART-NO	MFGR	WAVETEK NO.	QTY
C1 C29 C30 C31	CAP, F.T., 6.8PF CF102-R68	54-794-010-6892	SPEC	1510-30-1689	4
C10 C4	CAP, CER, 150PF, 1KV CD102-115	60U151M	MDC	1510-10-1151	2
C11	CAP, VARI, 7.35PF, 250V CV101-035	7STRIKO-02	STR	1510-70-0350	1
C12*	CAP, MICA, 27PF	CM05ED270J03	ARC	1510-50-0270	1
C13	CAP, MICA, 470PF, 500V CM101-147	DM15-471J	ARC	1510-50-0471	1
C15 C18	CAP, TANT, 10MF, 25V CE120-010	162D106X0025DD2	SPR	1510-21-7100	2
C16 C17	CAP, CER, F.T. 1000PF CF112-210	54-794-010-102P	SPEC	1510-30-8102	2
C19 C24 C25 C26 C27 C3 C5 C8 C9	CAP, CER, .01MF, 100V CD103-310	68U103M	MDC	1510-10-2103	9
C2	CAP, CER, 75PF, 1KV CD104-075	10TCU-Q75	SPR	1510-10-3750	1
C20	CAP, CER, .001MFD, 1KV CD102-210	5GAD10	SPR	1510-10-1102	1
C21	CAP, MICA, 100PF, 500V CM101-110	DM15-101J	C-D	1510-50-0101	1
C23 C28	CAP, CER, 20PF, 1KV CD101-020	60C0G200J	MDC	1510-10-0200	2

WAVETEK PARTS LIST	TITLE FM REF, M29-2	ASSEMBLY NO. 1114-00-0016 PAGE: 1	REV G

REFERENCE DESIGNATORS	PART DESCRIPTION	ORIG-MFGR-PART-NO	MFGR	WAVETEK NO.	QTY
C6	CAP, CER, 3000PF, 1KV CD102-230	5GA-D30	SPR	1510-10-1302	1
C7	CAP, CER, 68PF, 1KV CD104-068	68U2J680J	MDC	1510-10-3680	1
CR1 CR10 CR11	DIODE DR000-001	1N4004	P-C	4806-01-4004	3
CR2 CR7 CR8 CR9	DIODE DG000-011	FD-6666	FCD	4807-02-0003	4
CR3 CR4 CR5 CR6	DIODE DG000-010	FD777	FCD	4807-02-0002	4
IC03	DUAL DIFF AMP	CA3102AE	RCA	7000-31-0200	1
IC1 IC2	IC, 8 PIN, IC000-008	LM301-AN	NAT	7000-03-0100	2
J1	CONN JF000-005	37JR116-1	S-C	2110-03-0002	1
L01 L02	TOROID	LA009-010-1	HYT	1810-05-0004	2
Q1	TRANS QB000-011	TD401	SPR	4902-00-4010	1
Q10 Q7	TRANS QA051-390	2N5139	NAT	4901-05-1390	2
Q2	TRANS QB000-009	MPS3702	NAT	4902-03-7020	1
Q3	TRANS QB000-010	TD101	SPR	4902-00-1010	1
Q4	TRANS QA039-040	2N3904	NAT	4901-03-9040	1
Q5	TRANS QA039-060	2N3906	T-I	4901-03-9060	1

WAVETEK PARTS LIST	TITLE FM REF, M29-2	ASSEMBLY NO. 1114-00-0016 PAGE: 2	REV G

REFERENCE DESIGNATORS	PART DESCRIPTION	ORIG-MFGR-PART-NO	MFGR	WAVETEK NO.	QTY
Q6	TRANS QB000-026	AD3958	A-D	4902-03-9580	1
Q8 Q9	TRANS QA036-400	3640-18	NAT	4901-03-6400	2
R02	RES, MF, 1/8W, 1%, 4.87K RF212-487	MF55K-4.87K	ASE	4701-03-4871	1
R1	POT, 2K, RP130-220	89PR2K	BEK	4610-00-2202	1
R10 R16 R19 R22 R25 R3 R5	RES, MF, 1/8W, 1%, 1K RF212-100	MF55K-1K	ASE	4701-03-1001	7
R12 R15 R6	RES, MF, 1/8W, 1%, 110K RF214-110	MF55K-110K	ASE	4701-03-1103	3
R13	RES, C, 1/4W, 5%, 150K RC103-415	CF1/4-150K	ASE	4700-15-1503	1
R14 R30 R32 R33 R44 R9	RES, MF, 1/8W, 1%, 499 RF211-499	MF55K-499	ASE	4701-03-4990	6
R17 R29 R56 R57	RES, MF, 1/8W, 1%, 5.11K RF212-511	MF55K-5.11K	ASE	4701-03-5111	4
R18	POT, 20K, RP130-320	89PR20K	BEK	4610-00-2203	1
R20 R23 R58	RES, MF, 1/8W, 1%, 4.02K RF212-402	MF55K-4.02K	ASE	4701-03-4021	3
R21 R8	RES, MF, 1/8W, 1%, 249 RF211-249	MF55K-249	ASE	4701-03-2490	2
R26	RES, C, 1/8W, 1%, 33.2 RF21R-332	MF55K-33.2	ASE	4701-03-3329	1

REFERENCE DESIGNATORS	PART DESCRIPTION	ORIG-MFGR-PART-NO	MFGR	WAVETEK NO.	QTY
R28 R39 R41 R42 R46	RES, MF, 1/8W, 1%, 100 RF211-100	MF55K100	ASE	4701-03-1000	5
R34	RES, MF, 1/8W, 1%, 845 RF211-845	MF55K-845	ASE	4701-03-8450	1
R35 R50	RES, MF, 1/8W, 1%, 1.1K RF212-110	MF55K-1.1K	ASE	4701-03-1101	2
R36 R37 R51	RES, MF, 1/8W, 1%, 1.50K RF212-150	MF55K-1.50K	ASE	4701-03-1501	3
R38 R4 R40 R7	RES, MF, 1/8W, 1%, 2K RF212-200	MF55K-2K	ASE	4701-03-2001	4
R43 R54	RES, MF, 1/8W, 1%, 15K RF213-150	MF55K-15K	ASE	4701-03-1502	2
R45	RES, MF, 1/8W, 1%, 174 RF211-174	MF55K-174	ASE	4701-03-1740	1
R47 R49	RES, MF, 1/8W, 1%, 357 RF211-357	MF55K-357	ASE	4701-03-3570	2
R48	RES, MF, 1/8W, 1%, 2.10K RF212-210		MF55K	4701-03-2101	1
R55	RES, MF, 1/8W, 1%, 2.49K RF212-249	MF55K-2.49K	ASE	4701-03-2491	1
R59	RES, MF, 1/8W, 1%, 1M	RN55D	ASE	4701-03-1004	1
R60	RES, MF, 1/8W, 1%, 48.7K	MF55K-48.7K	ASE	4701-03-4872	1
R61	RES, MF, 1/8W, 1%, 10K	MF55K-10K	ASE	4701-03-1002	1

REFERENCE DESIGNATORS	PART DESCRIPTION	ORIG-MFGR-PART-NO	MFGR	WAVETEK NO.	QTY
C1 C18 C2 C3	CAP, CER, F.T. 1000PF CF112-210	54-794-010-102P	SPEC	1510-30-8102	4
C10	CAP, ELECT, 100MF, 6V CE118-110	500D107Q006CC7	SPR	1510-21-1101	1
C13	CAP, CER, 47PF, 1KV CD101-047	10TCC-Q47	SPR	1510-10-0470	1
C14	CAP, CER, FACTORY ADJ. 0-15, NPO	1510-99-9997	W-I	1510-99-9997	1
C15	CAP, CER, 470PF, 1KV CD102-147	60U471M	MDC	1510-10-1471	1
C16	CEA, CER, FACTORY ADJ. 20-27, N1500/25, NPO	1510-99-9998	W-I	1510-99-9998	1
C17	CAP, VAR, 1.4/9.2PF CV107-001	189-0563-001	JON	1510-70-6929	1
C19 C50	CAP, CER, .005MF, 100V	TQ-D50	SPR	1510-10-2502	2
C20	CAP, MICA, 180PF, 500V CM101-118	DM15-181J	ARC	1510-50-0181	1
C21	CAP, FT, 500PF, 20%250V CF104-150	4420-500PF	AER	1510-30-3501	1
C22	CAP, CER, 20PF, 1KV CD101-020	60C0G200J	MDC	1510-10-0200	1
C23	CAP, FT, CER, 100PF, 20% CF104-110	4420-100PF	AER	1510-30-3101	1

WAVETEK PARTS LIST	TITLE XTAL REF, M30	ASSEMBLY NO. 1114-00-0012 PAGE: 1	REV K

REFERENCE DESIGNATORS	PART DESCRIPTION	ORIG-MFGR-PART-NO	MFGR	WAVETEK NO.	QTY
C24 C25 C28 C40 C45	CAP, CER, FT, 2200PF, GMV, CF115-222	4420-2200PF	AER	1510-31-1222	5
C26 C34 C36 C39 C42 C47 C57	CAP, VAR, 3.5-13PF250V CV101-013	7S-TRIKO-02-3.5-13PF	STR	1510-70-0130	7
C27	CAP, CER, 4.7PF, 1KV CD101-R47	10TCC-V47	SPR	1510-10-0479	1
C29	CAP, CER, .001MFD, 1KV CD102-210	5GAD10	SPR	1510-10-1102	1
C30	CAP, CER, 15PF, 1KV CD101-015	10TCC-Q15	SPR	1510-10-0150	1
C31	CAP, G-C, 2.0PF, 10% CG101-220	GC-2.0PF	G-C	1510-40-0020	1
C32	CAP, M-C, 4.7PF, 10% CG102-247	GC-4.7PF	G-C	1510-40-1479	1
C33 C38	CAP, MC, 1.1PF, 10% CG102-211	MC1.1PF	G-C	1510-40-1119	2
C35 C37	CAP, M.C., .47PF CG102-147	MC-.47PF	G-C	1510-40-1478	2
C4 C5 C6 C7 C8	CAP, ELECT, 1MF, 25V CE120-001	162D105X9025BC2	SPR	1510-21-7010	5
C43	CAP, CER, F.T., 27PF CF114-027	4420-27PF	AER	1510-31-0270	1

WAVETEK PARTS LIST	TITLE XTAL REF, M30	ASSEMBLY NO. 1114-00-0012 PAGE: 2	REV K

REFERENCE DESIGNATORS	PART DESCRIPTION	ORIG-MFGR-PART-NO	MFGR	WAVETEK NO.	QTY
C44 C49 C51 C52	CAP,CER,10PF,1KV CD101-010	10TCC-G10	SPR	1510-10-0100	4
C53 C55	CAP,VARI,.5/3PF CV102-R30	R-TRIKO-107-02-M	STR	1510-70-1030	2
C54	CAP,M.C.,.1PF CG102-110	MC-.1PF	G-C	1510-40-1019	1
C56	CAP,M.C.,.75PF CG102-175	MC-.75PF	G-C	1510-40-1758	1
C59	CAP,G-C,10PF,10%, CG101-310	GC-10PF	G-C	1510-40-0100	1
C62	CAP,CER,.01MF,100V CD103-310	68U103M	MDC	1510-10-2103	1
C9	CAP,ELECT,100MF,12V CE119-110	500D107G012CC5	SPR	1510-21-2101	1
CR1 CR2 CR4	DIODE DR000-001	1N4004	P-C	4806-01-4004	3
CR3	DIODE DP000-040	MA47980	M-A	4805-02-0001	1
CR5	DIODE DG100-341	1N34A	HIT	4807-01-0034	1
CR6 CR7	DIODE DG000-012	5082-0180	H-P	4811-02-0001	2
IC1	VOLT REG,+5V	78M05U1C	FCD	7000-78-0500	1
IC2	OP AMP	N5741CV	SIG	7000-57-4100	1

REFERENCE DESIGNATORS	PART DESCRIPTION	ORIG-MFGR-PART-NO	MFGR	WAVETEK NO.	QTY
J1 J2 J3 J4 J5 J6 J7	CONN JF000-005	37JR116-1	S-C	2110-03-0002	7
L01 L02 L03	TOROID	LA009-010-1	HYT	1810-05-0004	3
L07	CHOKE .47MH 10% LA005-R04	08NR47K	ASE	1810-03-0478	1
L08 L09 L17	TOROID, 4 TURN	LA009-004-1	HYT	1810-05-0003	3
L10 L11 L21 L23 L24 L25	RF CHOKE	CHOKE	W-I	1819-99-9999	6
L12 L13 L14 L15 L19	CHOKE .22MH 10% LA005-R02	08NR22K	ASE	1810-03-0228	5
L16	FERRITE CHOKE LA009-004	T1255-1	HYT	1810-05-0001	1
L18	CHOKE .10MH 10% LA005-R01	08NR10K	ASE	1810-03-0019	1
L20	CHOKE, 1MH, 10% LA005-R10	08N1R0K	ASE	1810-03-0010	1
L26	GROUND LUG,#6,INT HG102-600	38-111	F-S	2112-03-0003	1
Q03	TRANSISTOR,NPN, MOT ONLY	2N5179-MOT	MOT	4901-05-1791	1
Q1 Q10 Q2 Q6 Q7 Q8 Q9	TRANS QA050-530	2N5053	APX	4901-05-0530	7
Q11 Q4 Q5	TRANS QA039-040	2N3904	NAT	4901-03-9040	3

REFERENCE DESIGNATORS	PART DESCRIPTION	ORIG-MFGR-PART-NO	MFGR	WAVETEK NO.	QTY
R10	RES, C, 1/4W, 5%, 100K RC103-410	CF1/4-100K	ASE	4700-15-1003	1
R11 R22 R9	RES, C, 1/4W, 5%, 1K RC103-210	CF1/4-1K	ASE	4700-15-1001	3
R12 R61	RES, C, 1/4W, 5%, 4.7K RC103-247	CF1/4-4.7K	ASE	4700-15-4701	2
R13	RES, C, 1/4W, 5%, 470K RC103-447	CF1/4-470K	ASE	4700-15-4703	1
R14 R23 R41 R60 R7	RES, C, 1/4W, 5%, 100 RC103-110	CF1/4-100	ASE	4700-15-1000	5
R15	RES, MF, 1/8W, 1%, 40.2K RF213-402	MF55K-40.2K	ASE	4701-03-4022	1
R16	RES, MF, 1/8W, 1%, 15K RF213-150	MF55K-15K	ASE	4701-03-1502	1
R17	RES, C, 1/4W, 5%, 1.5K RC103-215	CF1/4-1.5K	ASE	4700-15-1501	1
R18 R19 R6	RES, MF, 1/8W, 1%, 2K RF212-200	MF55K-2K	ASE	4701-03-2001	3
R20	RES, C, 1/4W, 5%, 1.8K RC103-218	CF1/4-1.8K	ASE	4700-15-1801	1
R21	RES, C, 1/4W, 5%, 220 RC103-122	CF1/4-220	ASE	4700-15-2200	1

REFERENCE DESIGNATORS	PART DESCRIPTION	ORIG-MFGR-PART-NO	MFGR	WAVETEK NO.	QTY
R24	RES, C, 1/8W, 5%, 10	CF1/8-10	ASE	4700-05-1009	1
R25 R26	RES, C, 1/8W, 5%, 100 RC101-110	CF1/8-100	ASE	4700-05-1000	2
R27	RES, C, 1/4W, 5%, 47K RC103-347	CF1/4-47K	ASE	4700-15-4702	1
R28	RES, C, 1/4W, 5%, 22K RC103-322	CF1/422K	ASE	4700-15-2202	1
R29 R8	RES, C, 1/4W, 5%, 2.2K RC103-222	CF1/4-2.2K	ASE	4700-15-2201	2
R30 R36 R43	RES, C, 1/4W, 5%, 33K RC103-333	CF1/4-33K	ASE	4700-15-3302	3
R31 R35 R42 R62	RES, C, 1/4W, 5%, 10K RC103-310	CF1/4-10K	ASE	4700-15-1002	4
R32 R38 R44 R45	RES, C, 1/8W, 5%, 47	CF1/8-47	ASE	4700-05-4709	4
R33 R39 R49	RES, C, 1/4W, 5%, 470 RC103-147	CF1/4-470	ASE	4700-15-4700	3
R34 R37	RES, C, 1/8W, 5%, 22	CF1/8-22	ASE	4700-05-2209	2
R4	RES, MF, 1/8W, 1%, 5.11K RF212-511	MF55K-5.11K	ASE	4701-03-5111	1
R40	RES, C, 1/4W, 5%, 82 RC103-082	CF1/4-82	ASE	4700-15-8209	1

REFERENCE DESIGNATORS	PART DESCRIPTION	ORIG-MFGR-PART-NO	MFGR	WAVETEK NO.	QTY
R46 R47	RES, C, 1/8W, 5%, 270	CF1/8-270	ASE	4700-05-2700	2
R48	RES, C, 1/4W, 5%, 10 RC103-010	CF1/4-10	ASE	4700-15-1009	1
R5 R50	RES, MF, 1/8W, 1%, 10K RF213-100	MF55K10K	ASE	4701-03-1002	2
R51	RES, MF, 1/8W, 1%, 34.0K RF213-340	MF55K-34.0K	ASE	4701-03-3402	1
R52	RES, MF, 1/8W, 1%, 13.0K RF213-130	MF55K-13.0K	ASE	4701-03-1302	1
T1	RF XFMR FROM: 1810-03-0010	TR004-001	W-I	1210-43-0001	1
X1	CRYSTAL, X40W-1	X40W-1-00.00000	W-I	2310-10-0401	1

WAVETEK PARTS LIST	TITLE XTAL REF, M30	ASSEMBLY NO. 1114-00-0012 PAGE: 7	REV K

REFERENCE DESIGNATORS	PART DESCRIPTION	ORIG-MFGR-PART-NO	MFGR	WAVETEK NO.	QTY
C101 C103 C104 C105 C106 C107	CAP, TANT, 10MF, 25V CE120-010	162D106X0025DD2	SPR	1510-21-7100	6
C102	CAP, CER, .01MF, 100V CD103-310	68U103M	MDC	1510-10-2103	1
IC101	IC, IC000-015	74S74N	T-I	8000-82-7401	1
IC102	DECADE COUNTER	SN74196N	T-I	8007-41-9600	1
IC103 IC104 IC105	DECADE CTR PRESET LS	SN74LS196N	T-I	8007-41-9610	3
L101 L102 L104 L105 L106 L107	TOROID	LA009-010-1	HYT	1810-05-0004	6
L103	TOROID, 10 TURN	LA009-010-2	HYT	1810-05-0005	1
Q101	TRANS GA039-040	2N3904	NAT	4901-03-9040	1
R101	RES, C, 1/4W, 5%, 390 RC103-139	CF1/4-390	ASE	4700-15-3900	1
R102	RES, C, 1/4W, 5%, 100 RC103-110	CF1/4-100	ASE	4700-15-1000	1
R103	RES, C, 1/4W, 5%, 1.8K RC103-218	CF1/4-1.8K	ASE	4700-15-1801	1
R104	RES, C, 1/4W, 5%, 2K RC103-220	CF1/4-2K	ASE	4700-15-2001	1
R105 R106	RES, C, 1/4W, 5%, 1K RC103-210	CF1/4-1K	ASE	4700-15-1001	2

WAVETEK PARTS LIST	TITLE PC ASSY	ASSEMBLY NO. 1218-00-0192 PAGE: 1	REV A

REFERENCE DESIGNATORS	PART DESCRIPTION	ORIG-MFGR-PART-NO	MFGR	WAVETEK NO.	QTY
C01 C02 C03 C04 C05 C06 C07 C08 C09 C10 C11 C12 C13 C14 C15 C16	CAP, CER, F.T. 1000PF CF112-210	54-794-010-102P	SPEC	1510-30-8102	16
C17	CAP, ELECT, 100MF, 12V CE119-110	500D107G012CC5	SPR	1510-21-2101	1
C18	CAP, ELECT, 100MF, 6V CE118-110	500D107G006CC7	SPR	1510-21-1101	1
C19 C20 C25 C28 C32 C37	CAP, TANT, 10MF, 25V CE120-010	162D106X0025DD2	SPR	1510-21-7100	6
C21 C22 C27 C29	CAP, FL, 5%, 100%, .12MF	160C124J100C	PLSSY	1510-60-8124	4
C23 C24 C26	CAP, MON, 1MF, 50V, 20%	3420-050-E105M	AER	1510-11-3105	3
C30	CAP, MICA, 1000PF, 500V CM101-210	DM15-102J	ARC	1510-50-0102	1
C31	CAP, CER, 10PF, 1KV CD101-010	10TCC-Q10	SPR	1510-10-0100	1
C33 C34	CAP, MICA, 180PF, 500V CM101-118	DM15-181J	ARC	1510-50-0181	2
C35	CAP, CER, .001MFD, 1KV CD102-210	5GAD10	SPR	1510-10-1102	1
C36	CAP, CER, .01MF, 100V CD103-310	68U103M	MDC	1510-10-2103	1

REFERENCE DESIGNATORS	PART DESCRIPTION	ORIG-MFGR-PART-NO	MFGR	WAVETEK NO.	QTY
CR01	MOT MV2301 TUNER DIODE	MV2301	MOT	4803-02-0008	1
CR02 CR03 CR05	DIODE DG109-140	1N4148	T-I	4807-01-0914	3
CR04	LED DL000-001	NSL5046	NAT	4810-02-0001	1
IC01 IC02 IC12	IC, IC000-012	SN7404N	T-I	8000-74-0400	3
IC03 IC04 IC05 IC06	DECADE CTR PRESET LS	SN74LS196N	T-I	8007-41-9610	4
IC07	IC, IC000-019	SN74H102N	T-I	8007-41-0200	1
IC08	IC, IC000-018	N74H11A	SIG	8000-74-1100	1
IC09	IC, IC000-029	11C44DC	FCD	8000-11-4400	1
IC10	DUAL OP AMP	RC4558NB	RAY	7000-14-5800	1
IC11	OP AMP	N5741CV	SIG	7000-57-4100	1
IC13	VOLT REG, +5V	78M05U1C	FCD	7000-78-0500	1
J01 J02	CONN JF000-005	37JR116-1	S-C	2110-03-0002	2
L01 L02 L03 L04 L05 L06 L07 L08 L09 L10 L11 L12	FERRITE CHOKE LA009-010	T1255-2	HYT	1810-05-0002	12
L13 L14 L15 L16	TOROID, 10 T, 3-1/4 IN	LA009-010-4	HYT	1810-05-0007	4
L17	CHOKE, 2.2MH, 10% LA005-R22	08N2R2K	ASE	1810-03-0229	1

REFERENCE DESIGNATORS	PART DESCRIPTION	ORIG-MFGR-PART-NO	MFGR	WAVETEK NO.	QTY
L18	CHOKE .47MH 10% LA005-R04	08NR47K	ASE	1810-03-0478	1
L19	CHOKE .22MH 10% LA005-R02	08NR22K	ASE	1810-03-0228	1
Q01	TRANS GA054-580	2N5458	MOT	4901-05-4580	1
Q02	TRANS GA053-060	2N5306	G-E	4901-05-3060	1
Q03 Q04	TRANS GA039-040	2N3904	NAT	4901-03-9040	2
R01 R02	RES, C, 1/4W, 5%, 4.7K RC103-247	CF1/4-4.7K	ASE	4700-15-4701	2
R03 R04 R06 R07 R26	RES, C, 1/4W, 5%, 30K RC103-330	CF1/4-30K	ASE	4700-15-3002	5
R05	POT, 2K, RP144-220 FROM: 4610-00-7202	91WR2K	BEK	4610-00-4202	1
R08 R27	RES, C, 1/4W, 5%, 47K RC103-347	CF1/4-47K	ASE	4700-15-4702	2
R09	RES, C, 1/4W, 5%, 68K RC103-368	CF1/4-68K	ASE	4700-15-6802	1
R10 R11 R14	RES, C, 1/4W, 5%, 6.8K RC103-268	CF1/4-6.8K	ASE	4700-15-6801	3
R12	RES, C, 1/4W, 5%, 3.3K RC103-233	CF1/4-3.3K	ASE	4700-15-3301	1

REFERENCE DESIGNATORS	PART DESCRIPTION	ORIG-MFGR-PART-NO	MFGR	WAVETEK NO.	QTY
R13 R22 R25	RES, C, 1/4W, 5%, 10K RC103-310	CF1/4-10K	ASE	4700-15-1002	3
R15	RES, MF, 1/8W, 1%, 30.1K RF213-301	MF55K-30.1K	ASE	4701-03-3012	1
R16	RES, MF, 1/8W, 1%, 4.32K RF212-432	MF55K-4.32K	ASE	4701-03-4321	1
R17 R18	RES, MF, 1/8W, 1%, 19.6K RF213-196	MF55K-19.6K	ASE	4701-03-1962	2
R19	RES, MF, 1/8W, 1%, 2.10K RF212-210		MF55K	4701-03-2101	1
R20 R30	RES, C, 1/4W, 5%, 1.8K RC103-218	CF1/4-1.8K	ASE	4700-15-1801	2
R21	RES, C, 1/4W, 5%, 1K RC103-210	CF1/4-1K	ASE	4700-15-1001	1
R23	RES, C, 1/4W, 5%, 15K RC103-315	CF1/4-15K	ASE	4700-15-1502	1
R24	RES, C, 1/4W, 5%, 2.7K RC103-227	CF1/4-2.7K	ASE	4700-15-2701	1
R28	RES, C, 1/4W, 5%, 160K RC103-416	CF1/4-160K	ASE	4700-15-1603	1
R29	RES, C, 1/4W, 5%, 20K RC103-320	CF1/4-20K	ASE	4700-15-2002	1

REFERENCE DESIGNATORS	PART DESCRIPTION	ORIG-MFGR-PART-NO	MFGR	WAVETEK NO.	QTY
C01	CAP, TANT, 10MF, 25V CE120-010	162D106X0025DD2	SPR	1510-21-7100	1
C02	CAP, ELECT, 100MF, 6V CE118-110	500D107G006CC7	SPR	1510-21-1101	1
C03 C04 C05 C06 C07 C08 C09 C10 C11 C12	CAP, CER, F.T. 1000PF CF112-210	54-794-010-102P	SPEC	1510-30-8102	10
C102 C104 C30 C31	CAP., CHIP, .1 MF	51C1209-B104Z	CFI	1510-00-3104	4
C103	CAP., CHIP, 360PF, 10%	100B361KP200X	ATC	1510-00-2361	1
C13	CAP, Q.C., 3.9PF CG101-239	QC-3.9PF	Q-C	1510-40-0399	1
C14	CAP, M.C., .62PF CG102-162	MC-.62PF	Q-C	1510-40-1628	1
C16 C17 C19	CAP, FT, 500PF, 20%250V CF104-150	4420-500PF	AER	1510-30-3501	3
C18	CAP, M.C., 3.9PF CG102-239	MC-3.9PF	Q-C	1510-40-1399	1
C20	CAP, MC, 1.1PF, 10% CG102-211	MC1.1PF	Q-C	1510-40-1119	1
C21	CAP, VAR, .3/1.2PF	7263	JHSN	1510-70-9129	1
C22 C23	CAP, FT, CER, 100PF, 20% CF104-110	4420-100PF	AER	1510-30-3101	2

REFERENCE DESIGNATORS	PART DESCRIPTION	ORIG-MFGR-PART-NO	MFGR	WAVETEK NO.	QTY
C24	CAP, MON, 1MF, 50V, 20%	3420-050-E105M	AER	1510-11-3105	1
C26 C27 C28 C29	CAP, F.T., 470PF CF101-147	FA5C-4712	A-B	1510-30-0471	4
CR04 CR05 CR06	DIODE DR000-001	1N4004	P-C	4806-01-4004	3
CR1	DIODE DC000-008	BB205B	APX	4803-02-0004	1
CR2	DIODE DG000-007	5082-2800	H-P	4809-02-0001	1
CR3	LED DL000-001	NSL5046	NAT	4810-02-0001	1
IC1	VOLT REG, +5V	78M05U1C	FCD	7000-78-0500	1
IC101	PROM, PER M32A FROM: 8007-42-8800	8410-00-0001	W-I	8410-00-0001	1
J1 J2 J3 J301	CONN JF000-005	37JR116-1	S-C	2110-03-0002	4
L01 L02 L03 L04 L05 L06 L07 L08 L09 L10 L13 L19	TOROID	LA009-010-1	HYT	1810-05-0004	12
L101 L102 L103 L104	TOROID, 10T, 1/16 INSL	LA-009-010-3	HYT	1810-05-0006	4
L15	CHOKE .22MH 10% LA005-R02	08NR22K	ASE	1810-03-0228	1
Q1	TRANS QA050-530	2N5053	APX	4901-05-0530	1
Q2	TRANS QB000-013	A430	APX	4902-00-4300	1

REFERENCE DESIGNATORS	PART DESCRIPTION	ORIG-MFGR-PART-NO	MFGR	WAVETEK NO.	QTY
Q3	TRANS QB000-035	BFR90	APX	4902-00-0900	1
R01	RES, C, 1/8W, 5%, 68	CF1/8-68	ASE	4700-05-6809	1
R02	RES, C, 1/8W, 5%, 2K	CF1/8-2K	ASE	4700-05-2001	1
R03	RES, C, 1/4W, 5%, 430 RC103-143	CF1/4-430	ASE	4700-15-4300	1
R04 R08 R11	RES, C, 1/8W, 5%, 4.7K	CF1/8-4.7K	ASE	4700-05-4701	3
R05 R10	RES, C, 1/4W, 5%, 1K RC103-210	CF1/4-1K	ASE	4700-15-1001	2
R06	RES, C, 1/4W, 5%, 10K RC103-310	CF1/4-10K	ASE	4700-15-1002	1
R07	RES, C, 1/4W, 5%, 2.7 RC103-R27	CF1/4-2.7	ASE	4700-15-2708	1
R09	RES, MF, 1/8W, 1%, 499 RF211-499	MF55K-499	ASE	4701-03-4990	1
R12	RES, C, 1/4W, 5%, 470 RC103-147	CF1/4-470	ASE	4700-15-4700	1
R13	RES, C, 1/8W, 5%, 820	CF1/8-820	ASE	4700-05-8200	1
2	DIG PGM BD ASSY	1218-00-0022	W-I	1218-00-0022	1
1	OSC CTL BD ASSY	M32A-S1	W-I	1218-00-0021	1
3	MIXER ASSY	M32A-S3	W-I	1219-00-0117	1
4	VIDEO AMP ASSY	M32A-S4	W-I	1219-00-0118	1

REFERENCE DESIGNATORS	PART DESCRIPTION	ORIG-MFGR-PART-NO	MFGR	WAVETEK NO.	QTY
C101	CAP, TANT, 10MF, 25V CE120-010	162D106X0025DD2	SPR	1510-21-7100	1
C105	CAP, CER, DISC, .001MF 50V, CD112-210	8101-050-102M	ETP	1510-10-7102	1
CR101 CR102 CR103	DIODE DG000-007	5082-2800	H-P	4809-02-0001	3
CR104	DIODE DG000-009	5082-2835	H-P	4809-02-0002	1
IC102 IC103	DECADE COUNTER	SN74S196N	T-I	8007-41-9601	2
IC104	DUAL J-K FLIP-FLIP	SN74S112N	T-I	8007-41-1200	1
IC105	IC, IC000-029	11C44DC	FCD	8000-11-4400	1
J101	SOCKET, S.I.L., 6-PIN	1-583773-3	AMP	2112-00-0017	1
J102	TERM., MINISERT	75060-013	BER	2112-23-0001	1
P101A P101B P101C P101D P101E P101F P101G P101H P101I P101J	EDGE-CLIP CONNECTOR	75382-001	BER	2112-22-0001	10
Q101	TRANS QA050-530	2N5053	APX	4901-05-0530	1
R101	RES. NETWORK, 7-4.7K, 8-PIN, 5%	807-472J	EPITK	4770-00-0006	1
R102	RES, C, 1/4W, 5%, 4.7K RC103-247	CF1/4-4.7K	ASE	4700-15-4701	1

REFERENCE DESIGNATORS	PART DESCRIPTION	ORIG-MFGR-PART-NO	MFGR	WAVETEK NO.	QTY
R103	RES, C, 1/4W, 5%, 33 RC103-033	CF1/4-33	ASE	4700-15-3309	1
R104	RES, C, 1/4W, 5%, 1.2K RC103-212	CF1/4-1.2K	ASE	4700-15-1201	1
R105	RES, MF, 1/8W, 1%, 2.10K RF212-210		MF55K	4701-03-2101	1
R106	RES, C, 1/4W, 5%, 15K RC103-315	CF1/4-15K	ASE	4700-15-1502	1
R107	RES, C, 1/4W, 5%, 1K RC103-210	CF1/4-1K	ASE	4700-15-1001	1
R108	RES, MF, 1/8W, 1%, 499 RF211-499	MF55K-499	ASE	4701-03-4990	1
R109	RES, C, 1/4W, 5%, 100K RC103-410	CF1/4-100K	ASE	4700-15-1003	1
R110 R111	RES, C, 1/8W, 5%, 4.7K	CF1/8-4.7K	ASE	4700-05-4701	2

WAVETEK PARTS LIST	TITLE DIG PGM BD ASSY	ASSEMBLY NO. 1218-00-0022 PAGE: 2	REV F

REFERENCE DESIGNATORS	PART DESCRIPTION	ORIG-MFGR-PART-NO	MFGR	WAVETEK NO.	QTY
C201	CAP, CER, .005MF, 100V	TG-D50	SPR	1510-10-2502	1
C202	CAP, CER, .001MFD, 1KV CD102-210	5GAD10	SPR	1510-10-1102	1
C203 C210 C211	CAP, MON, 1MF, 50V, 20%	3420-050-E105M	AER	1510-11-3105	3
C204 C205	CAP, CER, 150PF, 1KV CD102-115	60U151M	MDC	1510-10-1151	2
C206 C207	CAP, FILM, .047MF, 250V 5%	B32547-.047-5%-250V	SIEM	1510-60-9473	2
C208 C209	CAP, TANT, 10MF, 25V CE120-010	162D106X0025DD2	SPR	1510-21-7100	2
CR201 CR202 CR203 CR204	DIODE DG109-140	1N4148	T-I	4807-01-0914	4
IC201 IC202 IC203	DUAL OP AMP, RAYTHEON IC000-027	RC4558NB-RAY	RAY	7000-45-5801	3
OC201 OC202	LED, AXIAL VACTROL MP000-002	VTL5C3	VAC	3710-00-0001	2
P201	HEADER, 6-PIN, STRGHT REF: 2112-24-0000	2112-24-0001	W-I	2112-24-0001	1
P202A P202B P202C P202D P202E P202F P202G P202H P202I P202J P202K P202L	EDGE-CLIP CONNECTOR	75382-001	BER	2112-22-0001	12

WAVETEK PARTS LIST	TITLE OSC CTL BD ASSY	ASSEMBLY NO. 1218-00-0021 PAGE: 1	REV B

REFERENCE DESIGNATORS	PART DESCRIPTION	ORIG-MFGR-PART-NO	MFGR	WAVETEK NO.	QTY
R201 R221 R222	RES, C, 1/4W, 5%, 6.8K RC103-268	CF1/4-6.8K	ASE	4700-15-6801	3
R202 R203 R211	RES, C, 1/4W, 5%, 10K RC103-310	CF1/4-10K	ASE	4700-15-1002	3
R204	RES, C, 1/4W, 5%, 47K RC103-347	CF1/4-47K	ASE	4700-15-4702	1
R205 R206	POT, CERMET, 20K-OHM	A4C203	A-B	4610-13-5203	2
R207 R210	RES, C, 1/4W, 5%, 15K RC103-315	CF1/4-15K	ASE	4700-15-1502	2
R208	RES, MF, 1/8W, 1%, 2K RF212-200	MF55K-2K	ASE	4701-03-2001	1
R209 R225 R226	RES, C, 1/4W, 5%, 220K RC103-422	CF1/4220K	ASE	4700-15-2203	3
R212	RES, C, 1/8W, 5%, 1K RC101-210	CF1/8-1K	ASE	4700-05-1001	1
R213	POT, CERMET, 5K	A2B502	A-B	4610-13-4502	1
R214	RES, C, 1/4W, 5%, 470K RC103-447	CF1/4-470K	ASE	4700-15-4703	1
R215	POT, CERMET, 20K-OHM	A2B203	A-B	4610-13-4203	1
R216 R217 R219 R220	RES., 1/8W, 5%, 30K	CF1/8-30K	ASE	4700-05-3002	4
R218	POT, CERMET, 2K-OHM	A2B202	A-B	4610-13-4202	1

REFERENCE DESIGNATORS	PART DESCRIPTION	ORIG-MFGR-PART-NO	MFGR	WAVETEK NO.	QTY
R223 R224	RES, C, 1/4W, 5%, 100K RC103-410	CF1/4-100K	ASE	4700-15-1003	2
R227	RES, C, 1/4W, 5%, 1.2K RC103-212	CF1/4-1.2K	ASE	4700-15-1201	1
R228	RES, C, 1/4W, 5%, 1.8K RC103-218	CF1/4-1.8K	ASE	4700-15-1801	1

REFERENCE DESIGNATORS	PART DESCRIPTION	ORIG-MFGR-PART-NO	MFGR	WAVETEK NO.	QTY
C301 C305	CAP, FT, 500PF, 20%250V CF104-150	4420-500PF	AER	1510-30-3501	2
C302 C303 C304	CAP, CER, DISC, .001MF 50V, CD112-210	8101-050-102M	ETP	1510-10-7102	3
C306	CAP, MC, 1.1PF, 10% CG102-211	MC1.1PF	Q-C	1510-40-1119	1
CR301 CR302	DIODE DP000-060	MA47047	M-A	4805-02-0003	2
CR303 CR304	DIODE DG000-009	5082-2835	H-P	4809-02-0002	2
L301	FERRITE CHOKE, 1 TURN FROM: 1813-00-0007	LA007-001	W-I	1210-30-0004	1
L302	RF CHOKE	CHOKE	W-I	1819-99-9999	1
R301 R302	RES, C, 1/8W, 5%, 47K	CF1/8-47K	ASE	4700-05-4702	2
R303	RES, C, 1/8W, 5%, 390	CF1/8-390	ASE	4700-05-3900	1
T301	RF XFMR FROM: 1813-00-0007	TR001-001	W-I	1210-40-0001	1

WAVETEK PARTS LIST	TITLE	ASSEMBLY NO.	REV
	MIXER ASSY	1219-00-0117 PAGE: 1	

REFERENCE DESIGNATORS	PART DESCRIPTION	ORIG-MFGR-PART-NO	MFGR	WAVETEK NO.	QTY
C403	CAP, CER, F.T., 39PF CF114-039	4420-39PF	AER	1510-31-0390	1
C401	CAP, CER, 120PF, 1KV CD102-112	60U121M	MDC	1510-10-1121	1
C402	CAP, CER, .005MF, 100V	TG-D50	SPR	1510-10-2502	1
L401	CHOKE .10MH 10% LA005-R01	08NR10K	ASE	1810-03-0019	1
Q401 Q402	TRANS QA050-530	2N5053	APX	4901-05-0530	2
R401 R407 R408	RES, C, 1/4W, 5%, 820 RC103-182	CF1/4-820	ASE	4700-15-8200	3
R402 R409	RES, C, 1/4W, 5%, 10 RC103-010	CF1/4-10	ASE	4700-15-1009	2
R403 R406	RES, C, 1/4W, 5%, 2.7K RC103-227	CF1/4-2.7K	ASE	4700-15-2701	2
R404	RES, C, 1/4W, 5%, 3.3K RC103-233	CF1/4-3.3K	ASE	4700-15-3301	1
R405	RES, C, 1/4W, 5%, 1K RC103-210	CF1/4-1K	ASE	4700-15-1001	1

WAVETEK PARTS LIST	TITLE	ASSEMBLY NO.	REV
	VIDEO AMP ASSY	1219-00-0118 PAGE: 1	

REFERENCE DESIGNATORS	PART DESCRIPTION	ORIG-MFGR-PART-NO	MFGR	WAVETEK NO.	QTY
C04 C17 C23 C7 C9	CAP, ELECT, 1MF, 25V CE120-001	162D105X9025BC2	SPR	1510-21-7010	5
C05 C10 C11 C18 C21	CAP, CER, .005MF, 100V	TG-D50	SPR	1510-10-2502	5
C1 C28 C31	CAP, F.T., 6.8PF CF102-R68	54-794-010-6892	SPEC	1510-30-1689	3
C12 C33	CAP, CER, F.T., 150PF CF116-115	4420-150PF	AER	1510-31-2151	2
C19 C4 C6 C8	CAP, CER, F.T. 1000PF CF112-210	54-794-010-102P	SPEC	1510-30-8102	4
C2	CAP, G-C, 10PF, 10%, CG101-310	GC-10PF	G-C	1510-40-0100	1
C20	CAP, CER, 470PF, 1KV CD102-147	60U471M	MDC	1510-10-1471	1
C22 C26 C29 C30	CAP, CER, .001MFD, 1KV CD102-210	5GAD10	SPR	1510-10-1102	4
C25	CAP, CER, .05MF, 100V CD103-350	TG-S50	SPR	1510-10-2503	1
C27	CAP, CER, .002MF, 1KV CD102-220	5GAD20	SPR	1510-10-1202	1
C3	CAP, ELECT, 100MF, 12V CE119-110	500D107G012CC5	SPR	1510-21-2101	1
C5	CAP, ELECT, 100MF, 6V CE118-110	500D107G006CC7	SPR	1510-21-1101	1

WAVETEK PARTS LIST	TITLE NAR OSC LK, M33	ASSEMBLY NO. 1114-00-0011 PAGE: 1	REV M

REFERENCE DESIGNATORS	PART DESCRIPTION	ORIG-MFGR-PART-NO	MFGR	WAVETEK NO.	QTY
CR09 CR10 CR11 CR5 CR6 CR7 CR8	DIODE DR000-001	1N4004	P-C	4806-01-4004	7
CR1 CR2	DIODE DP000-040	MA47980	M-A	4805-02-0001	2
CR3	DIODE DG000-009	5082-2835	H-P	4809-02-0002	1
CR4	DIODE DG000-007	5082-2800	H-P	4809-02-0001	1
CR9	LED DL000-001	NSL5046	NAT	4810-02-0001	1
IC03 IC05	DUAL OP AMP, RAYTHEON IC000-027	RC4558NB-RAY	RAY	7000-45-5801	2
IC1	VOLT REG, +5V	78M05U1C	FCD	7000-78-0500	1
IC2	IC, IC000-023	SN7405N	T-I	8000-74-0500	1
IC4	IC, IC000-013	MC4044P	MOT	8000-40-4400	1
J1 J2 J3 J4 J5	CONN JF000-005	37JR116-1	S-C	2110-03-0002	5
L03 L04 L06 L07 L08 L09 L10	TOROID	LA009-010-1	HYT	1810-05-0004	7
L1 L12 L2 L5	CHOKE, 3.3MH, 10% LA005-R33	08N3R3K	ASE	1810-03-0339	4
Q1 Q3	TRANS QA039-040	2N3904	NAT	4901-03-9040	2
Q2	TRANS QA050-530	2N5053	APX	4901-05-0530	1

WAVETEK PARTS LIST	TITLE NAR OSC LK, M33	ASSEMBLY NO. 1114-00-0011 PAGE: 2	REV M

REFERENCE DESIGNATORS	PART DESCRIPTION	ORIG-MFGR-PART-NO	MFGR	WAVETEK NO.	QTY
R07 R23 R39	RES, C, 1/4W, 5%, 2.7K RC103-227	CF1/4-2.7K	ASE	4700-15-2701	3
R08	RES, C, 1/4W, 5%, 7.5K RC103-275	CF1/4-7.5K	ASE	4700-15-7501	1
R09	RES, C, 1/4W, 5%, 390 RC103-139	CF1/4-390	ASE	4700-15-3900	1
R1 R2 R5	RES, C, 1/4W, 5%, 56 RC103-056	CF1/4-56	ASE	4700-15-5609	3
R10	POT, 100	91AR100	BEK	4610-00-7101	1
R12	RES, C, 1/4W, 5%, 820 RC103-182	CF1/4-820	ASE	4700-15-8200	1
R13 R21	RES, C, 1/4W, 5%, 39K RC103-339	CF1/4-39K	ASE	4700-15-3902	2
R14	RES, C, 1/4W, 5%, 1.2K RC103-212	CF1/4-1.2K	ASE	4700-15-1201	1
R17 R3 R31 R32 R33	RES, C, 1/4W, 5%, 1K RC103-210	CF1/4-1K	ASE	4700-15-1001	5
R18	RES, MF, 1/8W, 1%, 619 RF211-619	MF55K-619	ASE	4701-03-6190	1
R20	RES, MF, 1/8W, 1%, 2.74K RF212-274	MF55K-2.74K	ASE	4701-03-2741	1
R22 R34	RES, C, 1/4W, 5%, 4.7K RC103-247	CF1/4-4.7K	ASE	4700-15-4701	2

REFERENCE DESIGNATORS	PART DESCRIPTION	ORIG-MFGR-PART-NO	MFGR	WAVETEK NO.	QTY
R24 R29 R46 R47	RES, C, 1/4W, 5%, 10K RC103-310	CF1/4-10K	ASE	4700-15-1002	4
R25 R44 R48	RES, C, 1/4W, 5%, 1.8K RC103-218	CF1/4-1.8K	ASE	4700-15-1801	3
R26 R30	RES, C, 1/4W, 5%, 27K RC103-327	CF1/4-27K	ASE	4700-15-2702	2
R27 R41 R42	RES, C, 1/4W, 5%, 100K RC103-410	CF1/4-100K	ASE	4700-15-1003	3
R28	RES, C, 1/4W, 5%, 15K RC103-315	CF1/4-15K	ASE	4700-15-1502	1
R36 R37 R4	RES, C, 1/4W, 5%, 2.2K RC103-222	CF1/4-2.2K	ASE	4700-15-2201	3
R43 R45	RES, C, 1/4W, 5%, 180K RC103-418	CF1/4-180K	ASE	4700-15-1803	2
R49	POT, 50K, RP129-350	360S503B	CTS	4610-00-1503	1
R50	RES, C, 1/4W, 10%, 2.2M RC104-522AB	CB2251	A-B	4705-16-2204	1
R51	RES, C, 1/4W, 5%, 47K RC103-347	CF1/4-47K	ASE	4700-15-4702	1

REFERENCE DESIGNATORS	PART DESCRIPTION	ORIG-MFGR-PART-NO	MFGR	WAVETEK NO.	QTY
C01	CAP, ELECT, 100MF, 12V CE119-110	500D1070012CC5	SPR	1510-21-2101	1
C02 C06 C09	CAP, CER, F.T. 1000PF CF112-210	54-794-010-102P	SPEC	1510-30-8102	3
C03	CAP, ELECT, 100MF, 6V CE118-110	500D1070006CC7	SPR	1510-21-1101	1
C04 C05 C07 C08	CAP, CER, .01MF, 100V CD103-310	68U103M	MDC	1510-10-2103	4
C10 C11 C12	CAP, ELECT, 1MF, 25V CE120-001	162D105X9025BC2	SPR	1510-21-7010	3
C13	CAP, FT, 500PF, 20%250V CF104-150	4420-500PF	AER	1510-30-3501	1
C14 C15 C16 C17 C20	CAP, F.T., 6.8PF CF102-R68	54-794-010-6892	SPEC	1510-30-1689	5
C18 C19	CAP, F.T., 120PF CF102-112	54-794-001-121K	SPEC	1510-30-1121	2
C21	CAP, CER, 200PF, 1KV CD102-120	5QA-T20	SPR	1510-10-1201	1
C602	CAP, CER, F.T., 39PF CF114-039	4420-39PF	AER	1510-31-0390	1
CR1	DIODE DQ000-009	5082-2835	H-P	4809-02-0002	1
CR2	LED DL000-001	NSL5046	NAT	4810-02-0001	1

WAVETEK PARTS LIST	TITLE WIDE OSC LK, M34	ASSEMBLY NO. 1114-00-0008 PAGE: 1	REV R

REFERENCE DESIGNATORS	PART DESCRIPTION	ORIG-MFGR-PART-NO	MFGR	WAVETEK NO.	QTY
IC1	VOLT REG, +5V	78M05U1C	FCD	7000-78-0500	1
IC2	IC, IC000-029	11C44DC	FCD	8000-11-4400	1
J1 J2 J3 J4 J5	CONN JF000-005	37JR116-1	S-C	2110-03-0002	5
L01	FERRITE CHOKE, 1 TURN FROM: 1813-00-0007	LA007-001	W-I	1210-30-0004	1
L02 L03 L04 L05 L07 L08 L09 L11 L12	TOROID	LA009-010-1	HYT	1810-05-0004	9
L10	TOROID, 10 TURN	LA009-010-2	HYT	1810-05-0005	1
L301 L601	CHOKE, 4.7MH, 10% LA005-R47	08N4R7K	ASE	1810-03-0479	2
R01	RES, C, 1/4W, 5%, 2.2K RC103-222	CF1/4-2.2K	ASE	4700-15-2201	1
R02 R07	RES, C, 1/4W, 5%, 100 RC103-110	CF1/4-100	ASE	4700-15-1000	2
R03 R08	RES, C, 1/4W, 5%, 47 RC103-047	CF1/4-47	ASE	4700-15-4709	2
R04	RES, C, 1/8W, 5%, 47	CF1/8-47	ASE	4700-05-4709	1
R06	RES, C, 1/4W, 5%, 1.2K RC103-212	CF1/4-1.2K	ASE	4700-15-1201	1
NONE	LEV ASSY	M34S-5	W-I	1218-00-0314	1

WAVETEK PARTS LIST	TITLE WIDE OSC LK, M34	ASSEMBLY NO. 1114-00-0008 PAGE: 2	REV R

REFERENCE DESIGNATORS	PART DESCRIPTION	ORIG-MFGR-PART-NO	MFGR	WAVETEK NO.	QTY
NONE	PH LK ASSY	M34S-6	W-I	1218-00-0334	1
NONE	VID AMP ASSY	M34S-4	W-I	1219-00-0019	1
NONE	VID MIXER ASSY	M34S-7	W-I	1219-00-0020	1
NONE	W.B. MIXER/AMP ASSY	M34-S2/3	W-I	1219-00-0129	1

WAVETEK PARTS LIST	TITLE WIDE OSC LK, M34	ASSEMBLY NO. 1114-00-0008 PAGE: 3	REV R

REFERENCE DESIGNATORS	PART DESCRIPTION	ORIG-MFGR-PART-NO	MFGR	WAVETEK NO.	QTY
C101 C104 C203	CAP, FT, 500PF, 20%250V CF104-150	4420-500PF	AER	1510-30-3501	3
C102 C103	CAP, CER, DISC, .001MF 50V, CD112-210	8101-050-102M	ETP	1510-10-7102	2
C105*	CAP, Q.C., 1.5PF CG101-215	QC-1.5PF	Q-C	1510-40-0159	1
C201 C204	CAP, CER, .005MF, 100V	TG-D50	SPR	1510-10-2502	2
C202* C207 C210	CAP, CER, 6.8PF, 1KV CD101-R68	60C0H6R8D	MDC	1510-10-0689	3
C205*	CAP, Q.C., 2.7PF CG101-227	QC-2.7PF	Q-C	1510-40-0279	1
C206	CAP, M-C, 4.7PF, 10% CG102-247	QC-4.7PF	Q-C	1510-40-1479	1
C208 C209	CAP, CER, 15PF, 1KV CD101-015	10TCC-Q15	SPR	1510-10-0150	2
CR101 CR102	DIODE DP000-040	MA47980	M-A	4805-02-0001	2
CR103 CR104	DIODE DG000-009	5082-2835	H-P	4809-02-0002	2
L101	FERRITE CHOKE, 1 TURN FROM: 1813-00-0007	LA007-001	W-I	1210-30-0004	1
L102	TOROID	LA009-010-1	HYT	1810-05-0004	1
L201 L202 L203 L204	RF CHOKE	CHOKE	W-I	1819-99-9999	4

WAVETEK PARTS LIST	TITLE W.B. MIXER/AMP ASSY	ASSEMBLY NO. 1219-00-0129 PAGE: 1	REV B

REFERENCE DESIGNATORS	PART DESCRIPTION	ORIG-MFGR-PART-NO	MFGR	WAVETEK NO.	QTY
Q201 Q202	TRANS GA050-530	2N5053	APX	4901-05-0530	2
R101 R102	RES, C, 1/8W, 5%, 47K	CF1/8-47K	ASE	4700-05-4702	2
R103	RES, C, 1/4, 5%, 27 RC103-027	CF1/4-27	ASE	4700-15-2709	1
R201	RES, C, 1/4W, 5%, 820 RC103-182	CF1/4-820	ASE	4700-15-8200	1
R202	RES, C, 1/4W, 5%, 560 RC103-156	CF1/4-560	ASE	4700-15-5600	1
R203	RES, C, 1/4W, 5%, 68 RC103-068	CF1/4-68	ASE	4700-15-6809	1
R204	RES, C, 1/4W, 5%, 47 RC103-047	CF1/4-47	ASE	4700-15-4709	1
R205	RES, C, 1/4W, 5%, 100 RC103-110	CF1/4-100	ASE	4700-15-1000	1
T101	RF XFMR FROM: 1813-00-0007	TR001-001	W-I	1210-40-0001	1

WAVETEK PARTS LIST	TITLE	ASSEMBLY NO.	REV
	W.B. MIXER/AMP ASSY	1219-00-0129 PAGE: 2	B

REFERENCE DESIGNATORS	PART DESCRIPTION	ORIG-MFGR-PART-NO	MFGR	WAVETEK NO.	QTY
C301	CAP, CER, F.T., 39PF CF114-039	4420-39PF	AER	1510-31-0390	1
C302	CAP, CER, F.T., 27PF CF114-027	4420-27PF	AER	1510-31-0270	1
C303 C306 C308 C320	CAP, CER, .01MF, 50V CD113-310	CY15C103M	C-L	1510-10-8103	4
C304 C305 C307 C309 C310 C312	CAP, CER, FT, 2200PF, GMV, CF115-222	4420-2200PF	AER	1510-31-1222	6
C311 C321 C322	CAP, ELECT, 1MF, 25V CE120-001	162D105X9025BC2	SPR	1510-21-7010	3
C313 C315 C316*	CAP, CER, F.T., 120PF CF116-112	4420-120PF	AER	1510-31-2121	3
C314	CAP, CER, F.T., 150PF CF116-115	4420-150PF	AER	1510-31-2151	1
C317	CAP, CER, F.T., 360PF CF116-136	4420-360PF	AER	1510-31-2361	1
C318*	CAP, CER, F.T., 18PF CF113-018	4420-18PF	AER	1510-30-9180	1
C319	CAP, CER, 100PF, 1KV CD104-110	10TCU-T10	SPR	1510-10-3101	1
CR301 CR302 CR303	DIODE, SIL, HOT CAR DG000-013	5082-3188	H-P	4812-02-0002	3

WAVETEK PARTS LIST	TITLE	ASSEMBLY NO.	REV
	VID AMP ASSY	1219-00-0019 PAGE: 1	I

REFERENCE DESIGNATORS	PART DESCRIPTION	ORIG-MFGR-PART-NO	MFGR	WAVETEK NO.	QTY
L06 L308	TOROID	LA009-010-1	HYT	1810-05-0004	2
L302	CHOKE, 4.7MH, 10% LA005-R47	08N4R7K	ASE	1810-03-0479	1
L303	TOROID, 4 TURN	LA009-004-1	HYT	1810-05-0003	1
L304	CHOKE .47MH 10% LA005-R04	08NR47K	ASE	1810-03-0478	1
L305 L306 L307	CHOKE, 1MH, 10% LA005-R10	08N1R0K	ASE	1810-03-0010	3
Q301 Q302 Q303 Q304	TRANS QA050-530	2N5053	APX	4901-05-0530	4
R05	RES, C, 1/4W, 5%, 470 RC103-147	CF1/4-470	ASE	4700-15-4700	1
R301 R308 R310	RES, C, 1/8W, 5%, 22K	CF1/8-22K	ASE	4700-05-2202	3
R302 R307 R309 R313	RES, C, 1/8W, 5%, 47	CF1/8-47	ASE	4700-05-4709	4
R303 R305 R311	RES, C, 1/8W, 5%, 2.2K	CF1/8-2.2K	ASE	4700-05-2201	3
R304 R306 R312	RES, C, 1/8W, 5%, 390	CF1/8-390	ASE	4700-05-3900	3
R314 R315 R316	RES, C, 1/8W, 5%, 2K	CF1/8-2K	ASE	4700-05-2001	3
R317	RES, MF, 1/8W, 1%, 15K RF213-150	MF55K-15K	ASE	4701-03-1502	1
R318	RES, MF, 1/8W, 1%, 1K RF212-100	MF55K-1K	ASE	4701-03-1001	1

REFERENCE DESIGNATORS	PART DESCRIPTION	ORIG-MFGR-PART-NO	MFGR	WAVETEK NO.	QTY
R319	RES, MF, 1/8W, 1%, 499 RF211-499	MF55K-499	ASE	4701-03-4990	1
R320	RES, MF, 1/8W, 1%, 2.43K RF212-243	MF55K-2.43K	ASE	4701-03-2431	1

REFERENCE DESIGNATORS	PART DESCRIPTION	ORIG-MFGR-PART-NO	MFGR	WAVETEK NO.	QTY
C401 C404	CAP, ELECT, 1MF, 25V CE120-001	162D105X9025BC2	SPR	1510-21-7010	2
C402	CAP, CER, .005MF, 100V	TG-D50	SPR	1510-10-2502	1
C403	CAP, CER, .001MFD, 1KV CD102-210	5GAD10	SPR	1510-10-1102	1
CR401 CR402 CR403 CR404 CR405 CR406 CR407 CR408	DIODE DR000-001	1N4004	P-C	4806-01-4004	8
IC401	DUAL OP AMP	RC4558NB	RAY	7000-14-5800	1
Q401 Q402 Q403 Q405	TRANS QA039-040	2N3904	NAT	4901-03-9040	4
Q404	TRANS QB000-009	MPS3702	NAT	4902-03-7020	1
R401 R403	RES, C, 1/4W, 5%, 15K RC103-315	CF1/4-15K	ASE	4700-15-1502	2
R402 R410 R417	RES, C, 1/4W, 5%, 47K RC103-347	CF1/4-47K	ASE	4700-15-4702	3
R404 R405	RES, C, 1/4W, 5%, 10K RC103-310	CF1/4-10K	ASE	4700-15-1002	2
R406	RES, C, 1/4W, 5%, 1K RC103-210	CF1/4-1K	ASE	4700-15-1001	1
R407	RES, C, 1/4W, 5%, 33K RC103-333	CF1/4-33K	ASE	4700-15-3302	1

REFERENCE DESIGNATORS	PART DESCRIPTION	ORIG-MFGR-PART-NO	MFGR	WAVETEK NO.	QTY
R408 R409	RES, C, 1/4W, 5%, 7.5K RC103-275	CF1/4-7.5K	ASE	4700-15-7501	2
R411	RES, C, 1/4W, 5%, 100K RC103-410	CF1/4-100K	ASE	4700-15-1003	1
R412	RES, C, 1/4W, 5%, 1M RC103-510	CF1/4-1M	ASE	4700-15-1004	1
R413	RES, C, 1/4W, 5%, 2.2K RC103-222	CF1/4-2.2K	ASE	4700-15-2201	1
R414	RES, C, 1/4W, 5%, 330K RC103-433	CF1/4-330K	ASE	4700-15-3303	1
R415	RES, C, 1/4W, 5%, 2.2M RC103-522	CF1/4-2.2M	ASE	4700-15-2204	1
R416	RES, C, 1/4W, 5%, 470K RC103-447	CF1/4-470K	ASE	4700-15-4703	1
R418	RES, C, 1/4W, 5%, 22K RC103-322	CF1/422K	ASE	4700-15-2202	1
R419	RES, C, 1/4W, 5%, 1.8K RC103-218	CF1/4-1.8K	ASE	4700-15-1801	1

REFERENCE DESIGNATORS	PART DESCRIPTION	ORIG-MFGR-PART-NO	MFGR	WAVETEK NO.	QTY
C501	CAP, CER, 25PF, 1KV CD101-025	60C0G250J	MDC	1510-10-0250	1
C502	CAP, MYLAR, .022MF200V CP101-322	WMF2S22	C-D	1510-60-0223	1
C503	CAP, ELECT, 1MF, 25V CE120-001	162D105X9025BC2	SPR	1510-21-7010	1
C504 C507	CAP, CER, .05MF, 100V CD103-350	TG-S50	SPR	1510-10-2503	2
C505	CAP, CER, 150PF, 1KV CD102-115	60U151M	MDC	1510-10-1151	1
C506	CAP, CER, 470PF, 1KV CD102-147	60U471M	MDC	1510-10-1471	1
C508	CAP, CER, .005MF, 100V	TG-D50	SPR	1510-10-2502	1
C509	CAP, CER, .001MFD, 1KV CD102-210	5GAD10	SPR	1510-10-1102	1
CR501 CR502 CR503 CR504 CR505 CR506	DIODE DR000-001	1N4004	P-C	4806-01-4004	6
IC501 IC502	DUAL OP AMP, RAYTHEON IC000-027	RC4558NB-RAY	RAY	7000-45-5801	2
Q501	TRANS QA054-580	2N5458	MOT	4901-05-4580	1
Q502	TRANS QA054-610	2N5461	MOT	4901-05-4610	1

REFERENCE DESIGNATORS	PART DESCRIPTION	ORIG-MFGR-PART-NO	MFGR	WAVETEK NO.	QTY
R501	RES, C, 1/4W, 5%, 470 RC103-147	CF1/4-470	ASE	4700-15-4700	1
R502	RES, C, 1/4W, 5%, 82K RC103-382	CF1/4-82K	ASE	4700-15-8202	1
R503	RES, C, 1/4W, 10%, 1.2K	CB1221	A-B	4705-16-1201	1
R504 R510	RES, C, 1/4W, 10%, 3.3K RC104-233AB	CB3321	A-B	4705-16-3301	2
R505	RES, C, 1/4W, 5%, 27K RC103-327	CF1/4-27K	ASE	4700-15-2702	1
R506	RES, C, 1/4W, 5%, 12K RC103-312	CF1/4-12K	ASE	4700-15-1202	1
R507 R508	RES, C, 1/4W, 10%, 10K RC104-310AB	CB1031	A-B	4705-16-1002	2
R509	RES, C, 1/4W, 10%, 2.2M RC104-522AB	CB2251	A-B	4705-16-2204	1
R511	RES, C, 1/4W, 10%, 4.7K RC104-247AB	CB4721	A-B	4705-16-4701	1
R512 R514	RES, C, 1/4W, 5%, 470K RC103-447	CF1/4-470K	ASE	4700-15-4703	2
R513 R515	RES, C, 1/4W, 10%, 10M RC104-610	CB1061	A-B	4700-16-1005	2
R516 R519 R521	RES, C, 1/4W, 5%, 33K RC103-333	CF1/4-33K	ASE	4700-15-3302	3

REFERENCE DESIGNATORS	PART DESCRIPTION	ORIG-MFGR-PART-NO	MFGR	WAVETEK NO.	QTY
R517 R518	RES, C, 1/4W, 5%, 680K RC103-468	CF1/4-680K	ASE	4700-15-6803	2
R520 R522	RES, C, 1/4W, 5%, 100K RC103-410	CF1/4-100K	ASE	4700-15-1003	2

WAVETEK PARTS LIST	TITLE PH LK ASSY	ASSEMBLY NO. 1218-00-0334 PAGE: 3	REV H

REFERENCE DESIGNATORS	PART DESCRIPTION	ORIG-MFGR-PART-NO	MFGR	WAVETEK NO.	QTY
C601	CAP, CER, F.T., 18PF CF113-018	4420-18PF	AER	1510-30-9180	1
CR601 CR602	DIODE DG000-009	5082-2835	H-P	4809-02-0002	2
R601	RES, C, 1/8W, 5%, 47	CF1/8-47	ASE	4700-05-4709	1
R602	RES, C, 1/4W, 5%, 470 RC103-147	CF1/4-470	ASE	4700-15-4700	1
T601	RF XFMR FROM: 1813-00-0007	TR001-002	W-I	1210-40-0002	1

WAVETEK PARTS LIST	TITLE VID MIXER ASSY	ASSEMBLY NO. 1219-00-0020 PAGE: 1	REV H

REFERENCE DESIGNATORS	PART DESCRIPTION	ORIG-MFGR-PART-NO	MFGR	WAVETEK NO.	QTY
C01 C02 C03	CAP, CER, .01MF, 50V CD113-310	CY15C103M	C-L	1510-10-8103	3
C04 C05	CAP, TANT, 10MF, 25V CE120-010	162D106X0025DD2	SPR	1510-21-7100	2
C06 C07 C08 C09 C10 C11 C12 C13 C14 C15 C16 C17 C18	CAP, CER, F.T. 1000PF CF112-210	54-794-010-102P	SPEC	1510-30-8102	13
C19	CAP, F.T., 6.8PF CF102-R68	54-794-010-6892	SPEC	1510-30-1689	1
C20 C21	CAP, F.T., 120PF CF102-112	54-794-001-121K	SPEC	1510-30-1121	2
CR01 CR02 CR03 CR04 CR05 CR06 CR07 CR08	DIODE DG109-140	1N4148	T-I	4807-01-0914	8
IC01 IC02 IC07	DUAL OP AMP, RAYTHEON IC000-027	RC4558NB-RAY	RAY	7000-45-5801	3
IC03	VOLTAGE REF	REF-01CJ	PMI	7000-00-0100	1
IC04 IC05 IC06	DAC, 2-DIGIT, BCD	DAC-20CQ	PMI	8000-00-0200	3
L01 L02	FERRITE CHOKE LA009-010	T1255-2	HYT	1810-05-0002	2
Q01	TRANS-QA042-500	PN4250	FCD	4901-04-2500	1
Q02	TRANS QA050-880	2N5088	MOT	4901-05-0880	1

REFERENCE DESIGNATORS	PART DESCRIPTION	ORIG-MFGR-PART-NO	MFGR	WAVETEK NO.	QTY
Q3 Q4	TRANS QA039-040	2N3904	NAT	4901-03-9040	2
R01 R39	RES, MF, 1/8W, 1%, 5.62K RF212-562	MF55K-5.62K	ASE	4701-03-5621	2
R02 R08 R18 R23 R31 R33	RES, C, 1/4W, 5%, 1K RC103-210	CF1/4-1K	ASE	4700-15-1001	6
R03 R32	RES, MF, 1/8W, 1%, 11.3K RF213-113	MF55K-11.3K	ASE	4701-03-1132	2
R04 R40	RES, MF, 1/8W, 1%, 4.02K RF212-402	MF55K-4.02K	ASE	4701-03-4021	2
R06 R11 R12 R25	RES, C, 1/4W, 5%, 330K RC103-433	CF1/4-330K	ASE	4700-15-3303	4
R07 R10 R13 R24 R30 R34 R37	POT, 100K, RP130-410	89PR100K	BEK	4610-00-2104	7
R09	RES, MF, 1/8W, 1%, 3.01K RF212-301	MF55K-3.01K	ASE	4701-03-3011	1
R14 R49 R50 R51 R54 R56 R57 R58 R59 R60	RES, MF, 1/8W, 1%, 5.11K RF212-511	MF55K-5.11K	ASE	4701-03-5111	10
R15 R17 R26 R43 R44 R45 R46	RES, C, 1/4W, 5%, 100K RC103-410	CF1/4-100K	ASE	4700-15-1003	7
R16	RES, C, 1/4W, 5%, 910K RC103-491	CF1/4-910K	ASE	4700-15-9103	1
R19	RES, MF, 1/8W, 1%, 16.5K RF213-165	MF55K-16.5K	ASE	4701-03-1652	1

REFERENCE DESIGNATORS	PART DESCRIPTION	ORIG-MFGR-PART-NO	MFGR	WAVETEK NO.	QTY
R20	RES, MF, 1/8W, 1%, 40.2K RF213-402	MF55K-40.2K	ASE	4701-03-4022	1
R21 R47 R48	RES, C, 1/4W, 5%, 270K RC103-427	CF1/4-270K	ASE	4700-15-2703	3
R22 R28	POT, 20K, RP130-320	89PR20K	BEK	4610-00-2203	2
R27	RES, C, 1/4W, 5%, 75K RC103-375	CF1/4-75K	ASE	4700-15-7502	1
R29 R35	RES, C, 1/4W, 5%, 220K RC103-422	CF1/4220K	ASE	4700-15-2203	2
R36	RES, C, 1/4W, 5%, 120K RC103-412	CF1/4-120K	ASE	4700-15-1203	1
R41 R42	RES, C, 1/4W, 5%, 10 RC103-010	CF1/4-10	ASE	4700-15-1009	2
R52 R53	RES, C, 1/4W, 5%, 2.7K RC103-227	CF1/4-2.7K	ASE	4700-15-2701	2
R55	RES, MF, 1/8W, 1%, 48.7K RF213-487	MF55K-48.7K	ASE	4701-03-4872	1

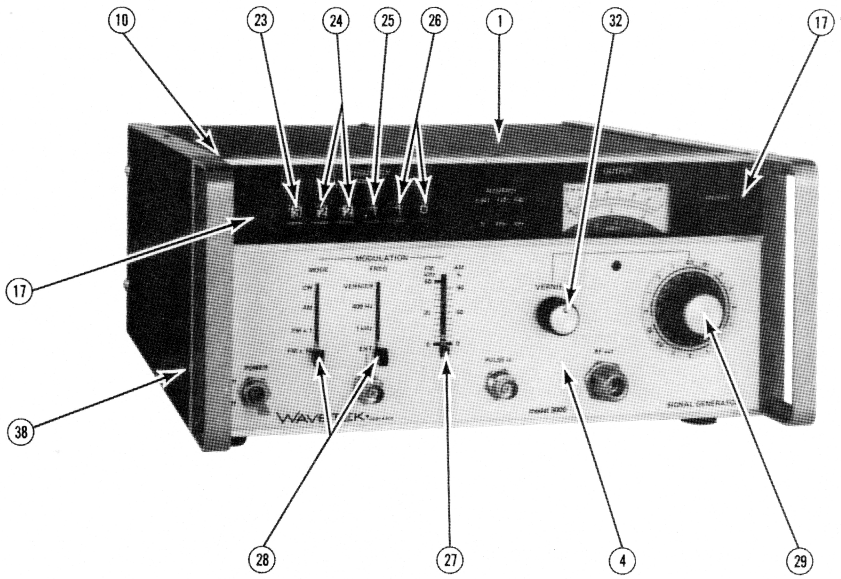
10
23
24
25
26
1
32
17
17
38
28
27
4
29

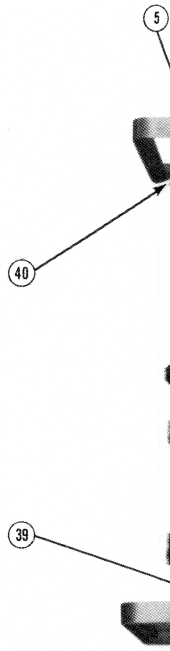
5
40
39

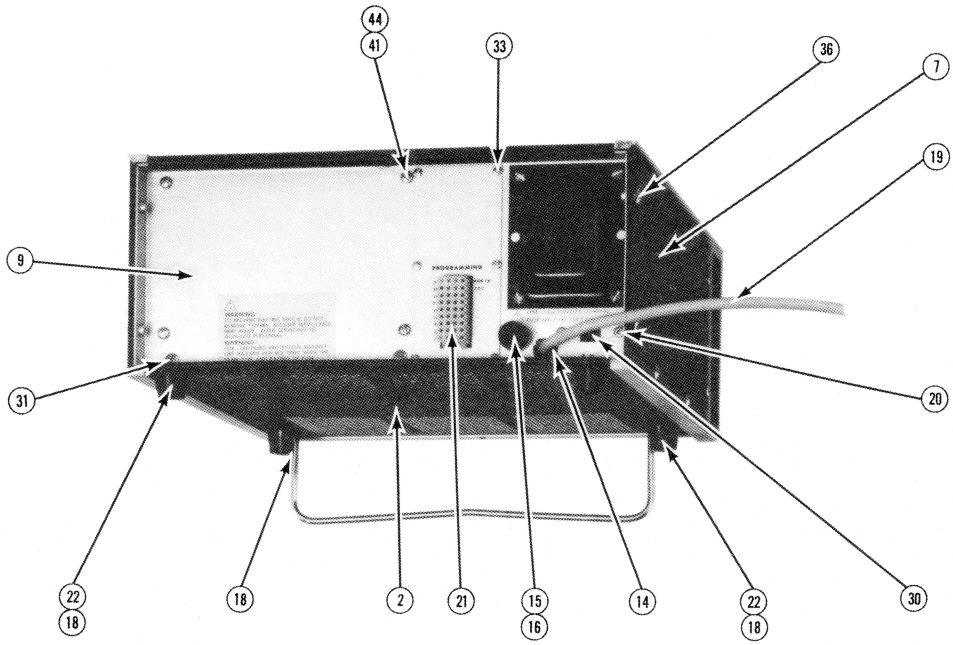
44
41
33
36
7
19
9
31
20
22
18
18
2
21
15
16
14
22
18
30

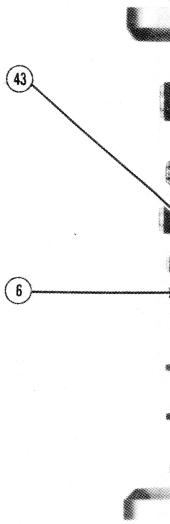
43
6

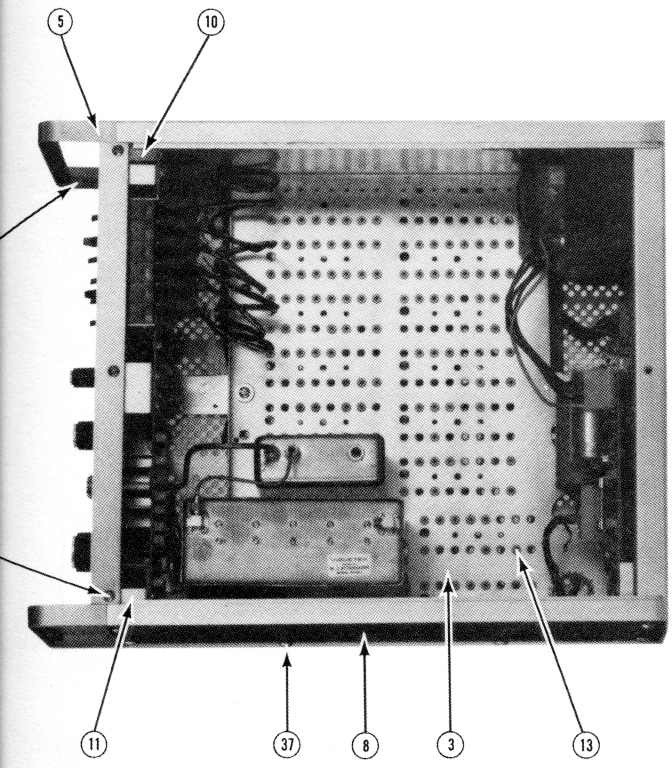

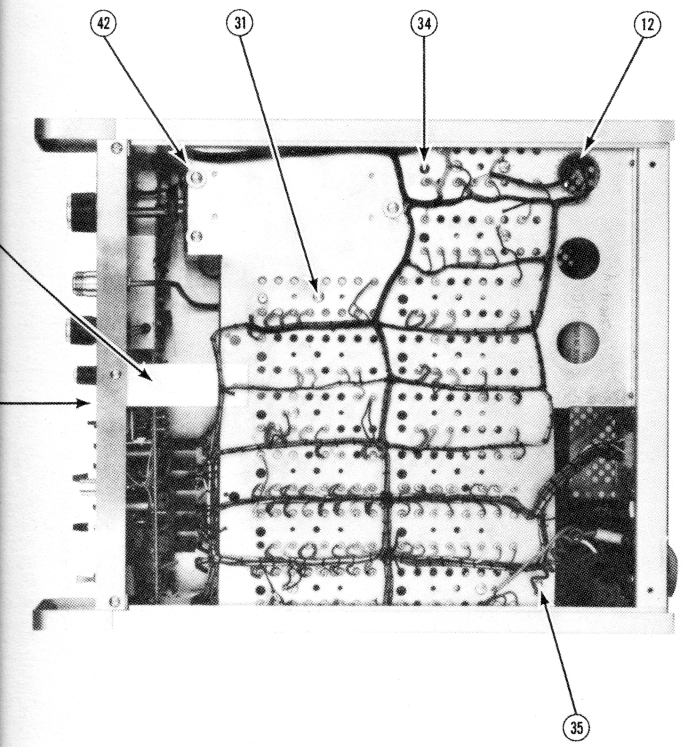

ITEM	DESCRIPTION	PART NUMBER	QTY.
44	EXT. LOCKWASHER	2810-25-6000	4
43	BRACKET	1410-00-6330	1
42	FLAT WASHER	2810-26-0007	4
41	SCREW, 6/32X3/16	2810-17-6103	4
40	HANDLE TRIM	2810-07-0005	2
39	SCREW, OH 6/32X3/8	2810-21-6106	6
38	SCREW, TH 8/32X1/2	2810-20-8108	4
37	SCREW, TH 8/32X1/4	2810-20-8104	5
36	SCREW, TH 8/32X5/16	2810-20-8105	4
35	SCREW, 6/32X1/8BH	2810-17-6102	7
34	SCREW, 6/32X3/8BH	2810-17-6106	4
33	SCREW, 4/40X3/16BH	2810-17-4103	6
32	KNOB	2410-01-0012	1
31	SCREW, 6/32X5/16BH	2810-17-6105	7
30	SWITCH, SLIDE	5105-00-0011	1
29	KNOB	2410-01-1006	1
28	KNOB, KK000-028	2410-01-0011	2
27	RES. SLIDETROL	4610-12-9103	1
26	LEVER, SWITCH	5101-00-0006	2
25	LEVER, SWITCH	5101-00-0005	1
24	LEVER, SWITCH	5101-00-0004	2
23	LEVER, SWITCH	5101-00-0002	1
22	CLIP, HF 109-000	2810-09-0002	4
21	RECEP. 36 PIN	2113-03-0004	1
20	RIVET, 1/8X5/16	2810-30-0007	2
19	LINE CORD ASSY	1219-00-0144	1
18	BAIL WITH FEET	2810-08-0006	1
17	LED DL 000-001	4810-02-0001	4
16	FUSE CARRIER	2410 05 0009	1
15	FUSEHOLDER BODY	2410-05-0010	1
14	STRAIN RELIEF	2810-37-0007	1
13	SOCKET	2112-00-0002	103
12	CAT. GROMMET	2810-10-0004	1
11	BRKT. RT. B001-155-2	1410-00-4670	1
10	BRKT. LT. B001-155-1	1410-00-4660	1
9	REAR PANEL	1410-00-3580	1
8	PANEL, R. SIDE	1410-00-6690	1
7	EXT., SIDE PANEL, L	1410-00-6680	1
6	TOP SUPPORT RAIL	1410-00-4610	2
5	HANDLE	1410-00-4710	2
4	FRONT PANEL	1410-00-5280	1
3	UNIT CHASSIS	1410-00-7140	1
2	BOTTOM COVER	1410-00-5300	1
1	TOP COVER	1410-00-5290	1

THIS DOCUMENT CONTAINS INFORMATION PROPRIETARY TO WAVETEK. THE INFORMATION IN THIS DOCUMENT IS NOT TO BE USED OR DUPLICATED IN ANY MANNER WITHOUT THE PRIOR APPROVAL IN WRITING OF WAVETEK.

TOLERANCE:
DECIMAL DIM. ± .005
FRACTIONAL DIM. ± 1/64
ANGLES ± 30'
UNLESS OTHERWISE SPECIFIED

NO	DESCRIPTION	BY
	REVISION	

MATERIAL:

FINISH:

ARTWORK #

WAVETEK INDIANA

3000 MECHANICAL

DRAWN BY	SCALE	DATE
Bob Abel		
CHK'D	DATE	DRAWING NO.
	4-24-80	DD-40
RELEASED BY	DATE	

SECTION 7
SCHEMATICS

7.1 INTRODUCTION

This section contains all schematics for the instrument. A schematic index is given in Section 7.4.

7.2 SCHEMATIC NOTES

The following notes and abbreviations pertain to all schematics. Additional notes pertaining to specific schematics are included on each schematic if required.

All values are shown in the following units unless otherwise specified.

Components	Units
Resistor	ohms
Capacitor	picofarads
Inductor	microhenries



Denotes DC voltage reading in volts unless otherwise specified.



Denotes high impedance crystal detector reading in volts unless otherwise specified.



Denotes 50 ohm crystal detector reading in volts unless otherwise specified.

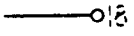

Signal or voltage source.

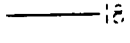

Connects to indicated signal or voltage source.

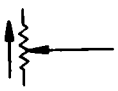

Arrow indicates clockwise rotation of wiper.



Coaxial jack

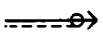

Coaxial plug

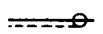

Coaxial cable



Factory adjusted part.

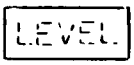

Denotes a front-panel device.



Denotes a rear-panel device.

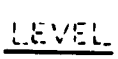

Denotes a PC board adjustment or accessible module adjustment.



Denotes an internal module adjustment not accessible without removing module cover.

7.3 ABBREVIATION CODE

A	Assembly	IF	intermediate frequency	Ω	ohm
A	ampere	J	jack	OC	opto coupler
AC	alternating current	K	relay	P	plug
C	capacitor	kHz	kilohertz	pp	peak-to-peak
CR	diode	kΩ	kilohm	pF	picofarad
CW	continuous wave	kV	kilovolt	Q	transistor
cw	clockwise	kW	kilowatt	R	resistor
dB	decibel	L	inductor	RF	radio frequency
dBm	decibel referred to 1 mW	MHz	megahertz	RMS	root-mean-square
dBmV	decibel referred to 1 mV	MΩ	megohm	R.P.	rear panel
DC	direct current	µF	microfarad	S	switch
DS	indicating device, lamp	µA	microampere	T	transformer
F	farad	µH	microhenry	TP	test point
F.P.	front panel	M	meter	V	volt
H	henry	mA	milliampere	VA	voltampere
Har	harmonic	mH	millihenry	W	watt
Hz	hertz	mV	millivolt	X	crystal
IC	integrated circuit	mW	milliwatt		

7.4 SCHEMATIC INDEX

The schematics appear in the following order.

ASSEMBLY	NAME
3000	Wiring Diagram
DPS2A	Power Supply
M30	Crystal Reference
C316	Modulation Board
M29-2	FM Reference
M31A	kHz Steps
M33	Narrow Oscillator Lock
M172	Sweep Drive/DAC
M32A	MHz Steps
M34	Wide Oscillator Lock
M9W	Sweep Oscillator
C315	Meter Board
M10W-9	Output Amplifier

Printed circuit board layouts, where applicable, are shown opposite their corresponding schematics.

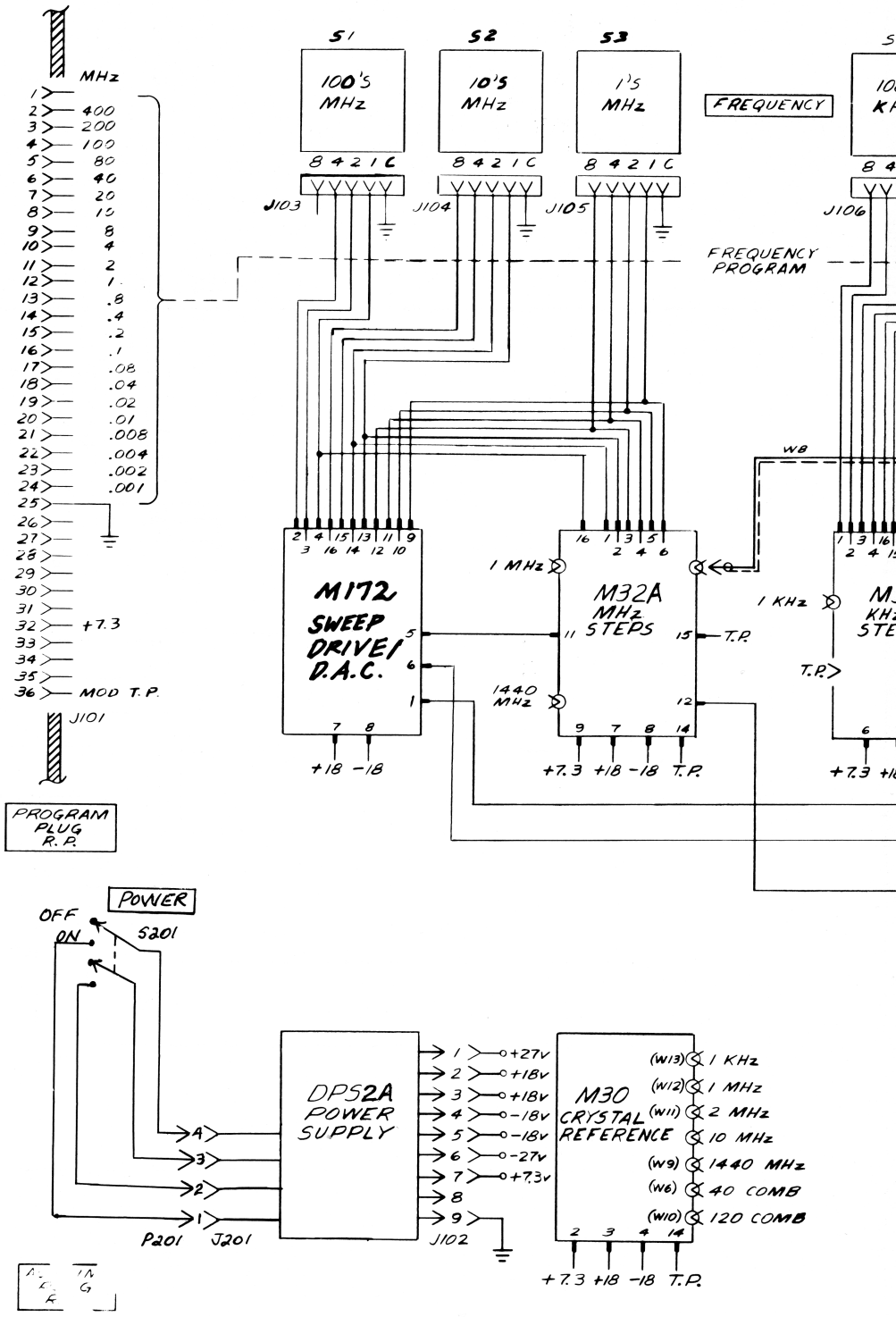
MHz
400
200
100
80
40
20
10
8
4
2
1
.8
.4
.2
.1
.08
.04
.02
.01
.008
.004
.002
.001
+7.3
MOD T.P.
J101
PROGRAM PLUG R.P.
S1
100's MHz
S2
10's MHz
S3
1's MHz
FREQUENCY
8 4 2 1 C
J103
J104
J105
J106
FREQUENCY PROGRAM
W8
M172 SWEEP DRIVE/ D.A.C.
M32A MHz STEPS
1 MHz
1440 MHz
T.P.
1 KHz
+18 -18
+7.3 +18 -18 T.P.
POWER
OFF
ON
S201
DPS2A POWER SUPPLY
+27v
+18v
+18v
-18v
-18v
-27v
+7.3v
P201
J201
J102
M30 CRYSTAL REFERENCE
(W13) 1 KHz
(W12) 1 MHz
(W11) 2 MHz
10 MHz
(W9) 1440 MHz
(W6) 40 COMB
(W10) 120 COMB
+7.3 +18 -18 T.P.

DPS2A

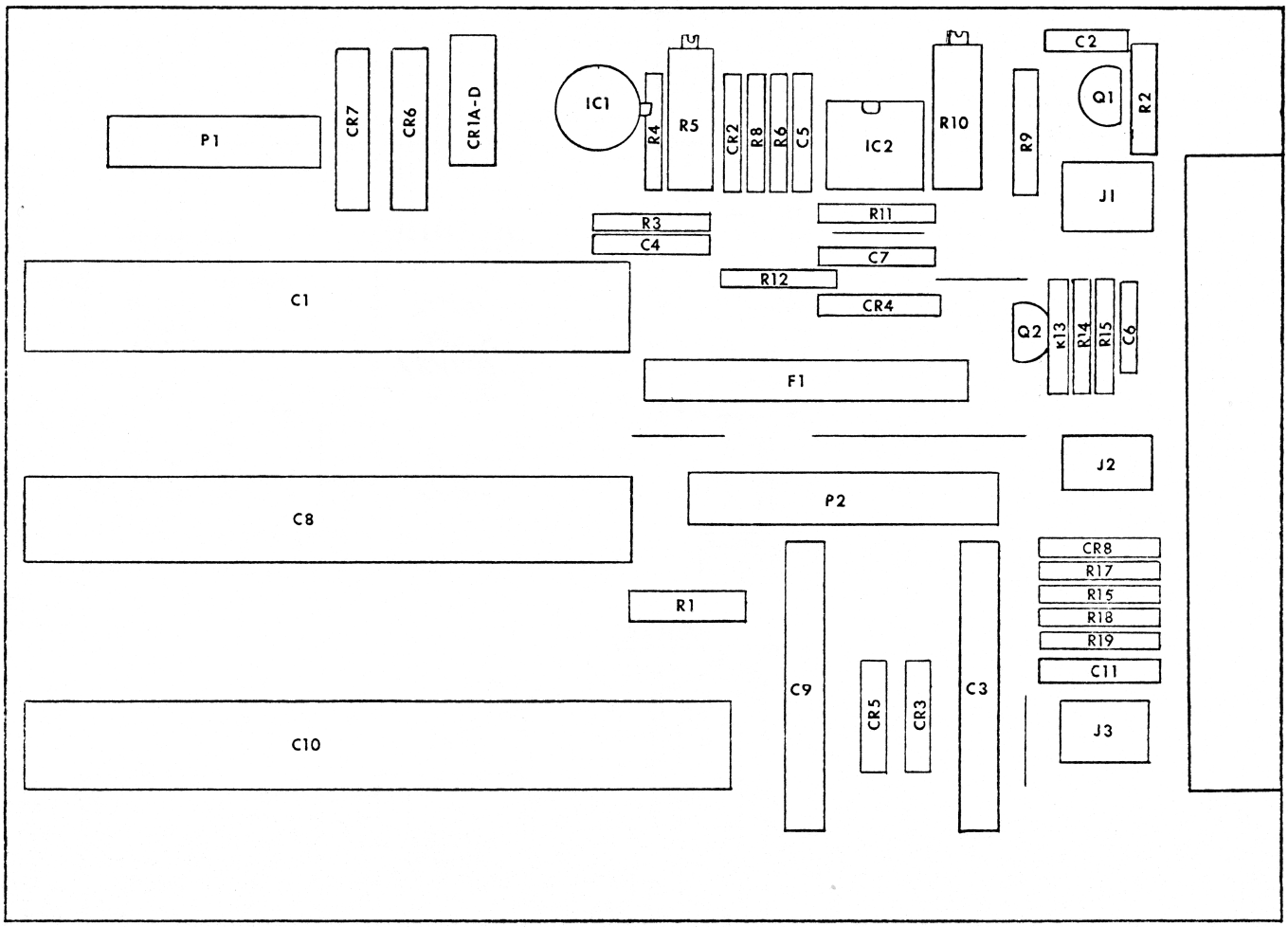
P1
CR7
CR6
CR1A-D
IC1
R4
R5
CR2
R8
R6
C5
IC2
R10
R9
C2
Q1
R2
J1
R3
C4
R11
C7
R12
CR4
C1
Q2
K13
R14
R15
C6
F1
J2
P2
C8
CR8
R17
R15
R18
R19
C11
R1
C9
CR5
CR3
C3
J3
C10

SCHEMATIC 1
MODEL 3000
WIRING DIAGRAM

REV. L

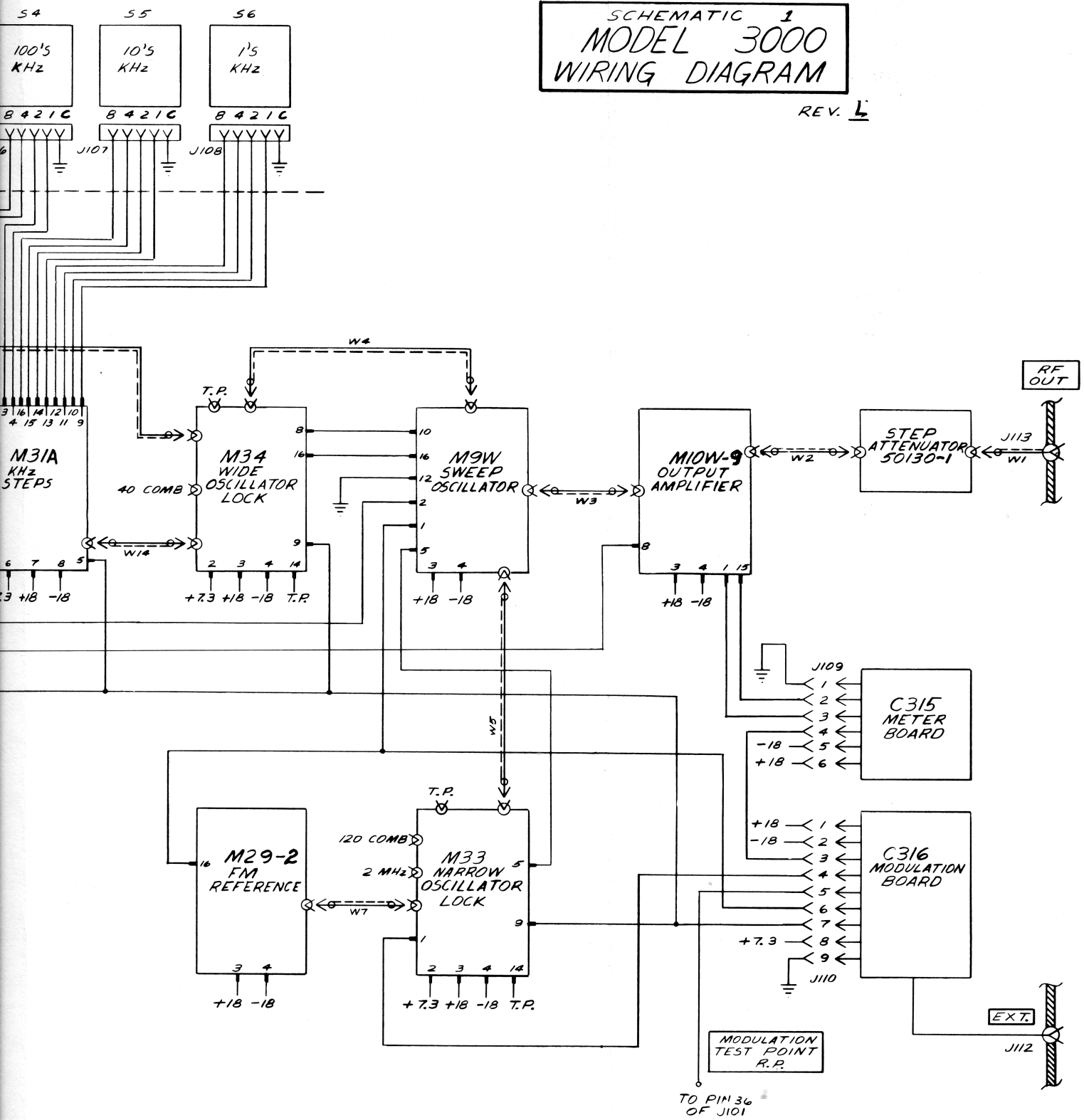

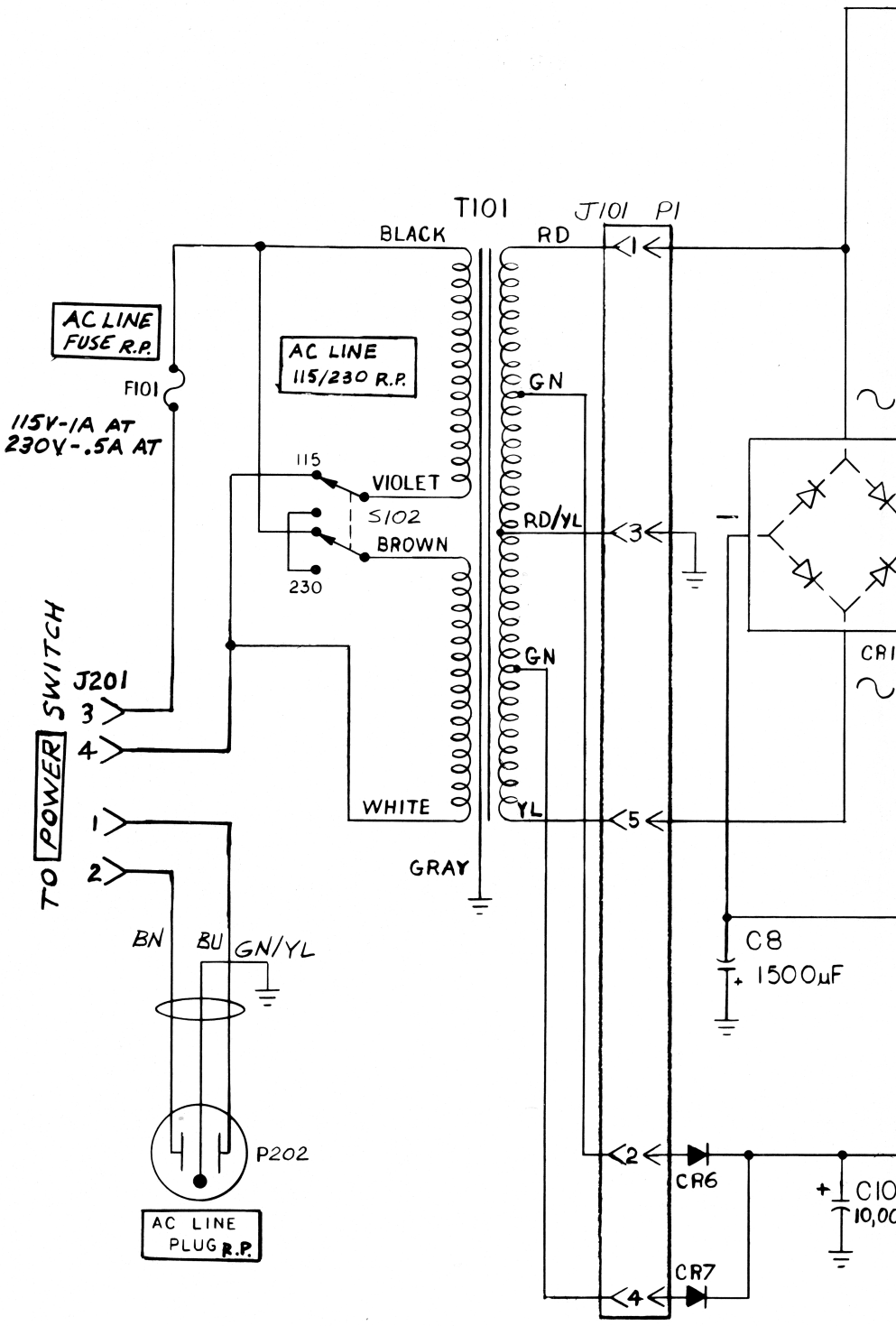
T101
J101
P1
BLACK
RD
AC LINE FUSE R.P.
F101
115V-1A AT
230V-.5A AT
AC LINE 115/230 R.P.
115
VIOLET
S102
BROWN
230
GN
RD/YL
GN
WHITE
YL
GRAY
J201
3
4
TO POWER SWITCH
1
2
BN
BU
GN/YL
P202
AC LINE PLUG R.P.
1
3
5
2
4
CR6
CR7
C8
1500μF
C10
10,00

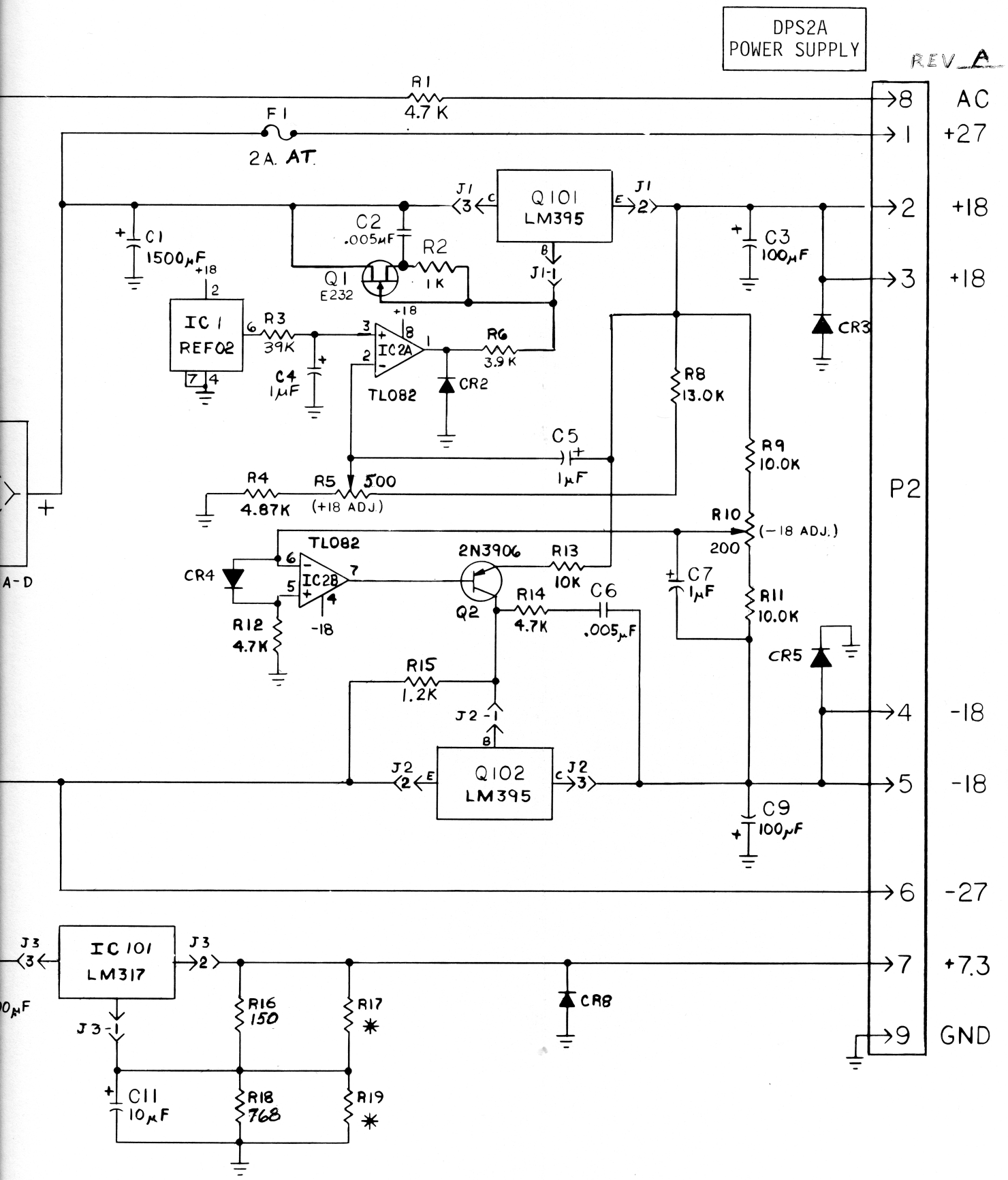
DPS2A
POWER SUPPLY
REV A
R1
4.7 K
F1
2A. AT
C1
1500µF
+18
IC 1
REF02
R3
39K
C4
1µF
C2
.005µF
R2
1K
Q1
E232
IC2A
TL082
CR2
R6
3.9 K
Q101
LM395
J1
C3
100µF
CR3
R8
13.0K
R9
10.0K
C5
1µF
R4
4.87K
R5
500
(+18 ADJ.)
R10
(-18 ADJ.)
200
TL082
IC2B
CR4
R12
4.7K
-18
2N3906
Q2
R13
10K
R14
4.7K
C6
.005µF
C7
1µF
R11
10.0K
CR5
R15
1.2K
J2
Q102
LM395
C9
100µF
P2
AC
+27
+18
+18
-18
-18
-27
+7.3
GND
A-D
IC 101
LM317
J3
R16
150
R17
*
CR8
C11
10µF
R18
768
R19
*

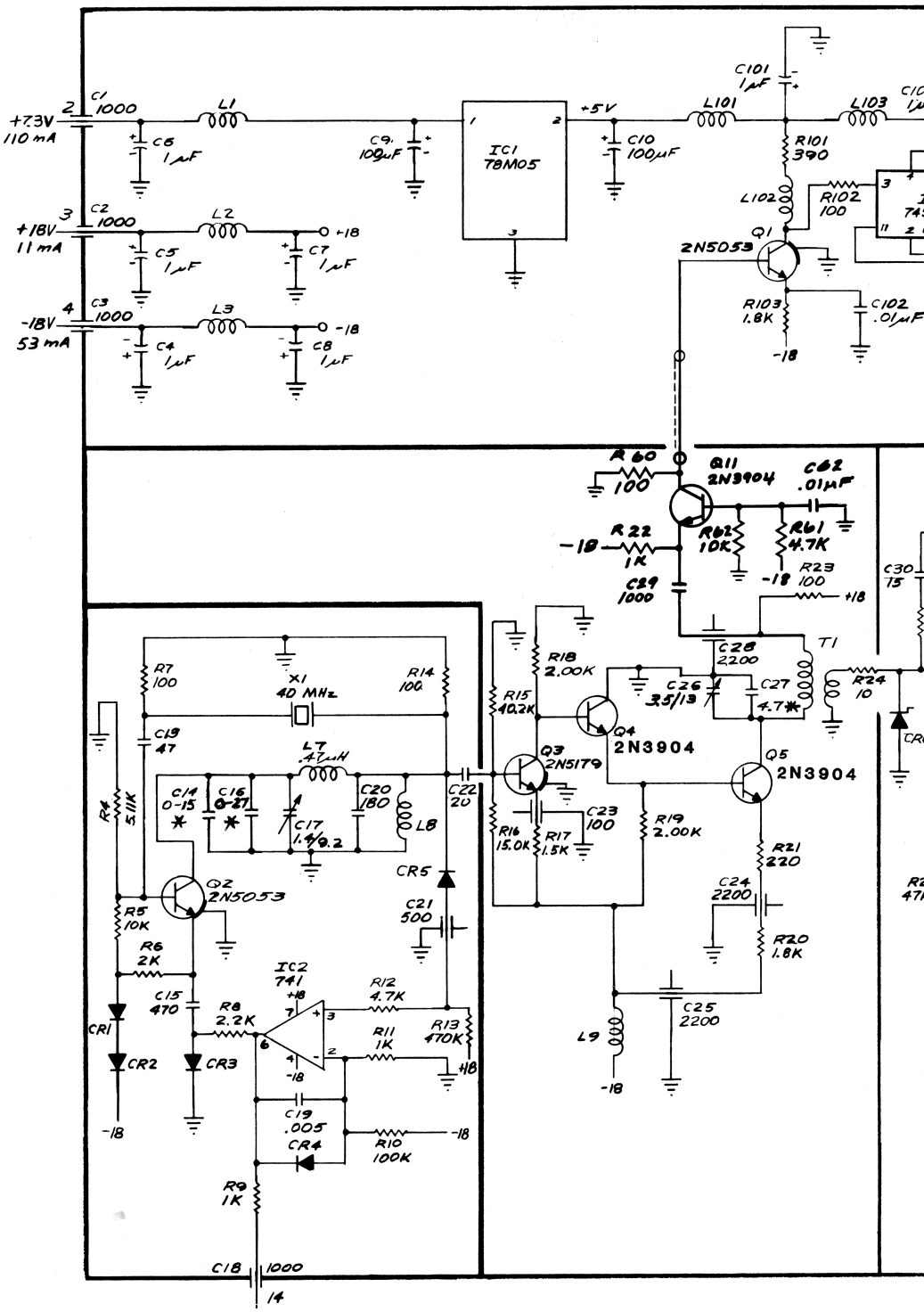

LEVELER TEST POINT

C316

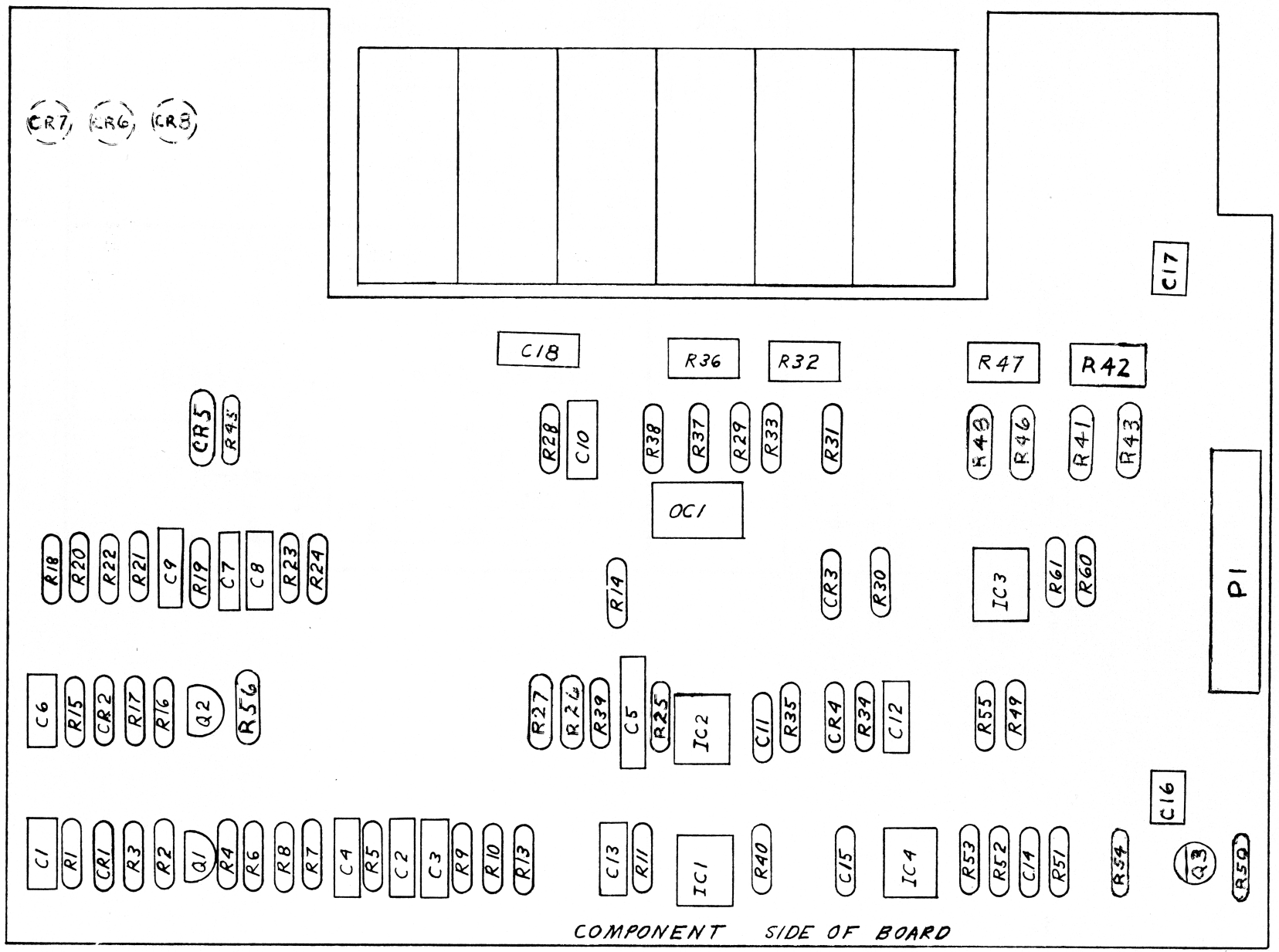
CR7
CR6
CR8
C17
C18
R36
R32
R47
R42
CR5
R45
R28
C10
R38
R37
R29
R33
R31
R48
R46
R41
R43
OC1
P1
R18
R20
R22
R21
C9
R19
C7
C8
R23
R24
R14
CR3
R30
IC3
R61
R60
C6
R15
CR2
R17
R16
Q2
R56
R27
R26
R39
C5
R25
IC2
C11
R35
CR4
R34
C12
R55
R49
C16
C1
R1
CR1
R3
R2
Q1
R4
R6
R8
R7
C4
R5
C2
C3
R9
R10
R13
C13
R11
IC1
R40
C15
IC4
R53
R52
C14
R51
R54
Q3
R50
COMPONENT SIDE OF BOARD
R44 *
AM/FM
MODULATION
S1 *
MODULATION
FREQUENCY
SWITCH
S2 *
MODULATION
MODE
SWITCH
* MOUNTED ON
FRONT-SIDE OF
PC BOARD

M30
CRYSTAL REFERENCE

REV. H

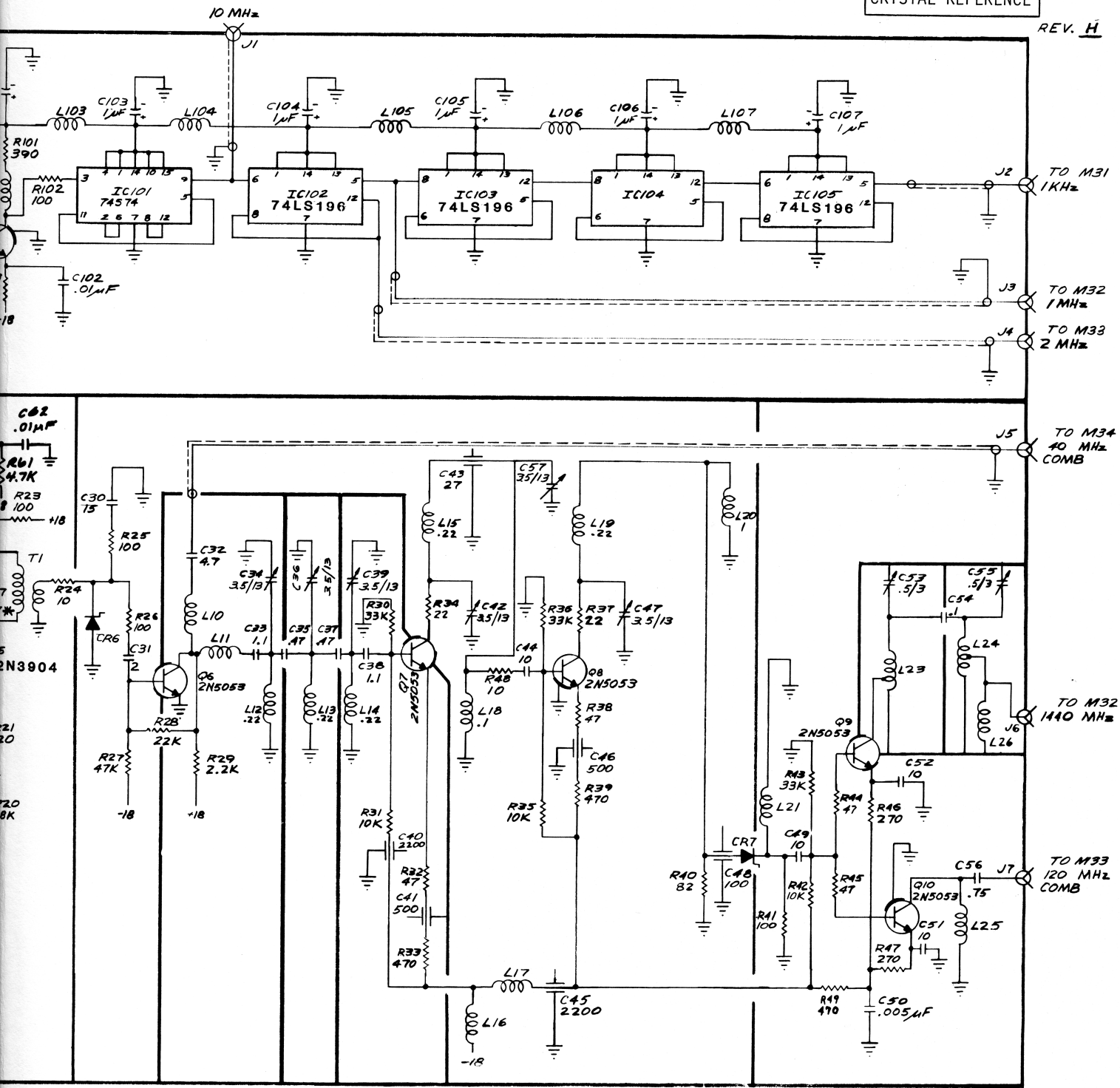

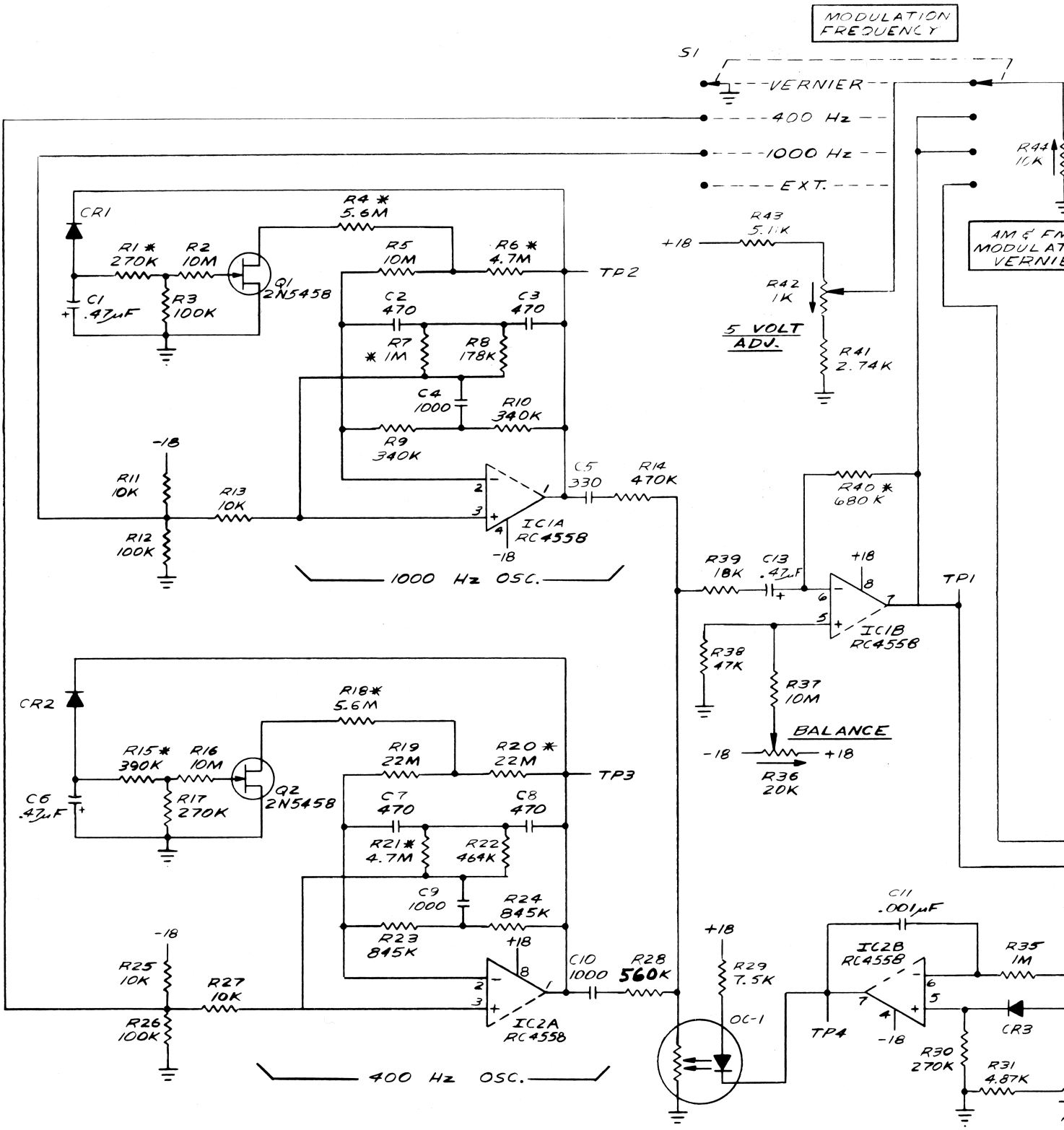
MODULATION FREQUENCY
S1
VERNIER
400 Hz
1000 Hz
EXT.
CR1
R1 * 270K
R2 10M
R3 100K
C1 .47µF
Q1 2N5458
R4 * 5.6M
R5 10M
R6 * 4.7M
TP2
C2 470
C3 470
R7 * 1M
R8 178K
C4 1000
R10 340K
R9 340K
-18
R11 10K
R12 100K
R13 10K
IC1A RC4558
C5 330
R14 470K
1000 Hz OSC.
R43 5.1K
+18
R42 1K
5 VOLT ADJ.
R41 2.74K
R40 * 680K
R39 18K
C13 .47µF
IC1B RC4558
TP1
R38 47K
R37 10M
BALANCE
R36 20K
CR2
R18 * 5.6M
R15 * 390K
R16 10M
Q2 2N5458
C6 .47µF
R17 270K
R19 22M
R20 * 22M
TP3
C7 470
C8 470
R21 * 4.7M
R22 464K
C9 1000
R24 845K
R23 845K
R25 10K
R26 100K
R27 10K
IC2A RC4558
C10 1000
R28 560K
400 Hz OSC.
R29 7.5K
OC-1
C11 .001µF
IC2B RC4558
R35 1M
CR3
TP4
R30 270K
R31 4.87K

M29-2

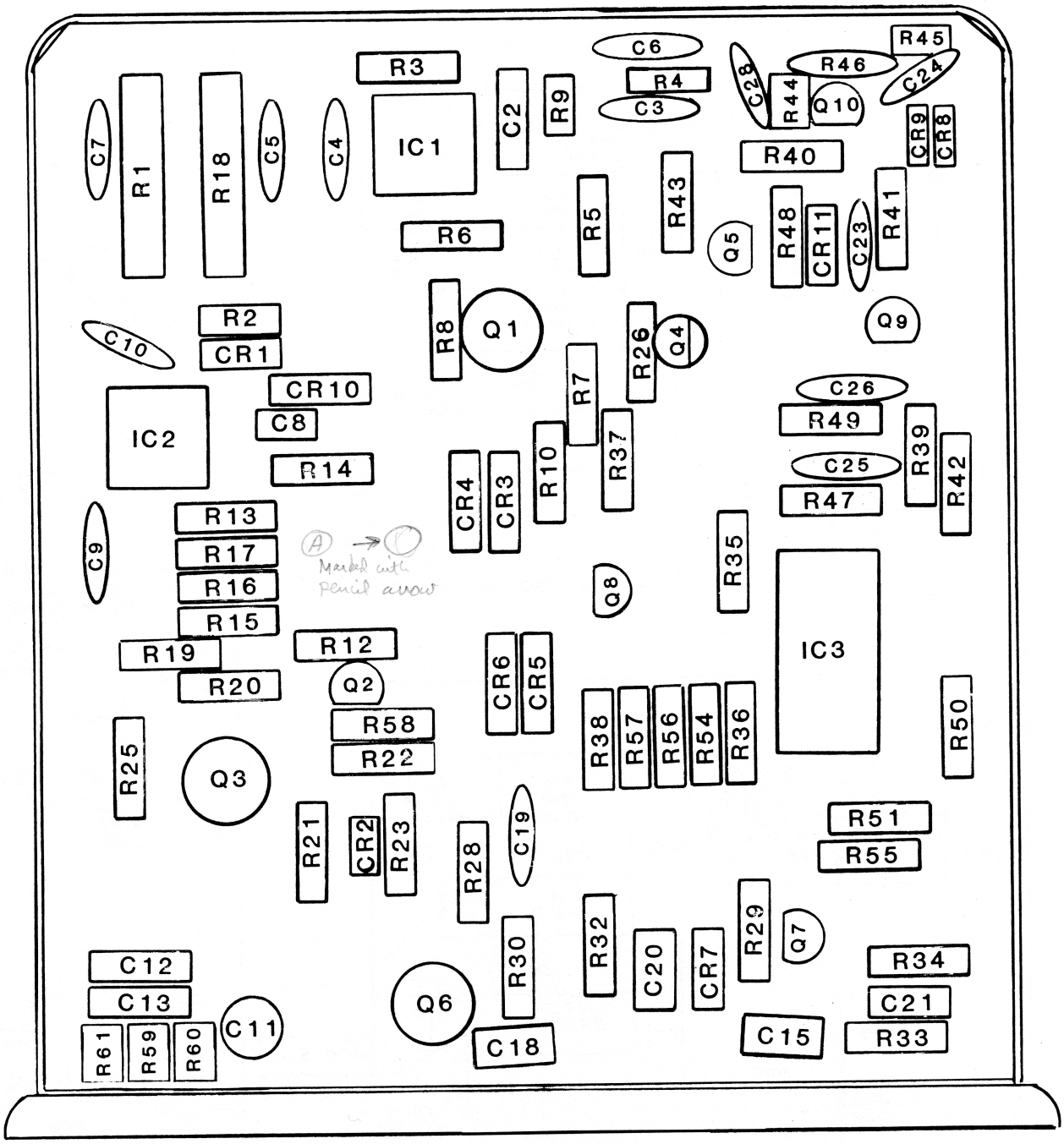

Mod. removed 2/21/90: pot on front panel used to set bias frequency on FM position

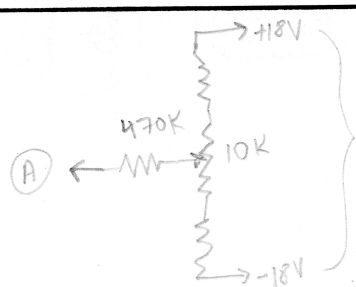

pick off ±18V on pins 1 & 2 on modulator board

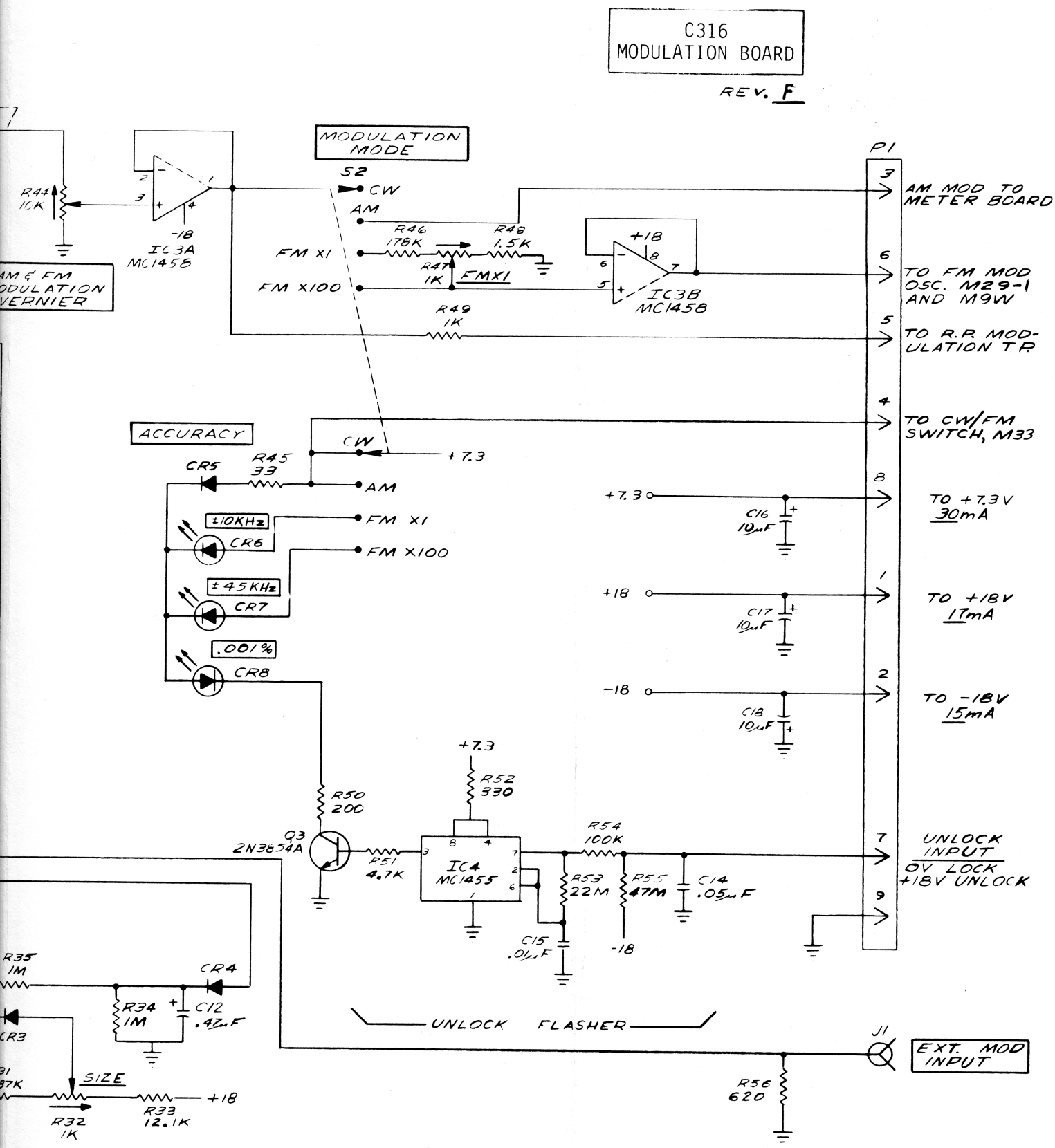
C316
MODULATION BOARD
REV. F
MODULATION MODE
S2
CW
AM
FM X1
FM X100
R46 178K
R48 1.5K
R47 1K
FMX1
R49 1K
IC3A MC1458
IC3B MC1458
+18
-18
R44 10K
AM & FM MODULATION VERNIER
P1
3 AM MOD TO METER BOARD
6 TO FM MOD OSC. M29-1 AND M9W
5 TO R.P. MODULATION T.P.
4 TO CW/FM SWITCH, M33
8 TO +7.3V 30mA
1 TO +18V 17mA
2 TO -18V 15mA
7 UNLOCK INPUT 0V LOCK +18V UNLOCK
9
ACCURACY
CR5
R45 33
±10KHz
CR6
±45KHz
CR7
.001%
CR8
+7.3
C16 10µF
C17 10µF
C18 10µF
R50 200
Q3 2N3854A
R51 4.7K
R52 330
IC4 MC1455
R54 100K
R53 22M
R55 47M
C14 .05µF
C15 .01µF
UNLOCK FLASHER
R35 1M
CR4
R34 1M
C12 .47µF
CR3
SIZE
R32 1K
R33 12.1K
J1
EXT. MOD INPUT
R56 620

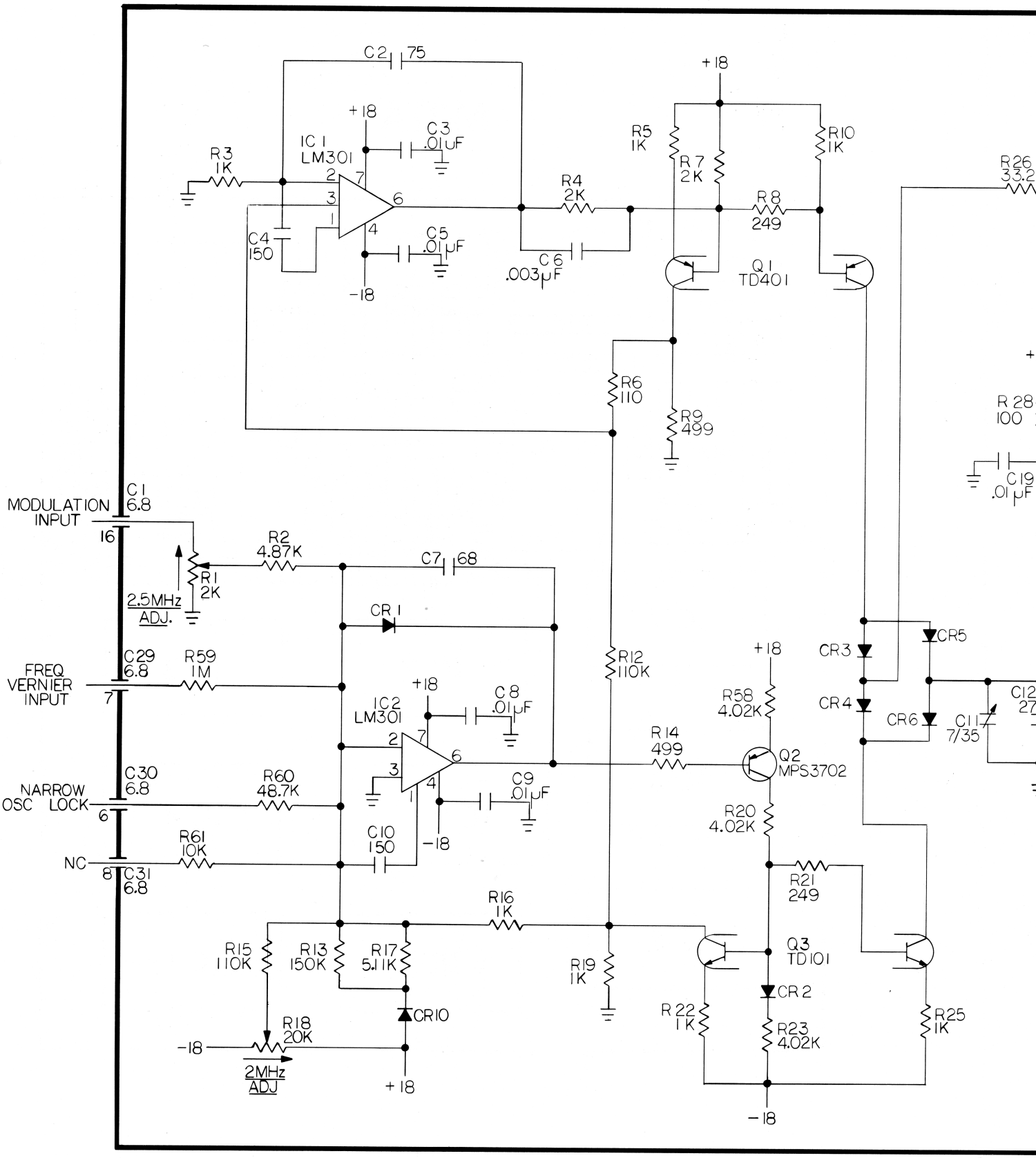
C2 75
+18
C3 .01µF
IC1 LM301
R3 1K
C4 150
C5 .01µF
-18
C6 .003µF
R4 2K
R5 1K
R7 2K
+18
R10 1K
R8 249
Q1 TD401
R26 33.2
R6 110
R9 499
R28 100
C19 .01µF
C1 6.8
MODULATION INPUT
16
R2 4.87K
C7 68
R1 2K
2.5MHz ADJ.
CR1
C29 6.8
R59 1M
FREQ VERNIER INPUT
7
IC2 LM301
+18
C8 .01µF
R12 110K
+18
CR3
CR5
CR4
CR6
C11 7/35
C12 27
R58 4.02K
R14 499
Q2 MPS3702
C30 6.8
R60 48.7K
NARROW OSC LOCK
6
C9 .01µF
C10 150
-18
R20 4.02K
R61 10K
NC
8
C31 6.8
R21 249
R16 1K
R15 110K
R13 150K
R17 5.11K
R19 1K
Q3 TD101
CR2
CR10
R22 1K
R23 4.02K
R25 1K
R18 20K
-18
2MHz ADJ
+18
-18

M31A

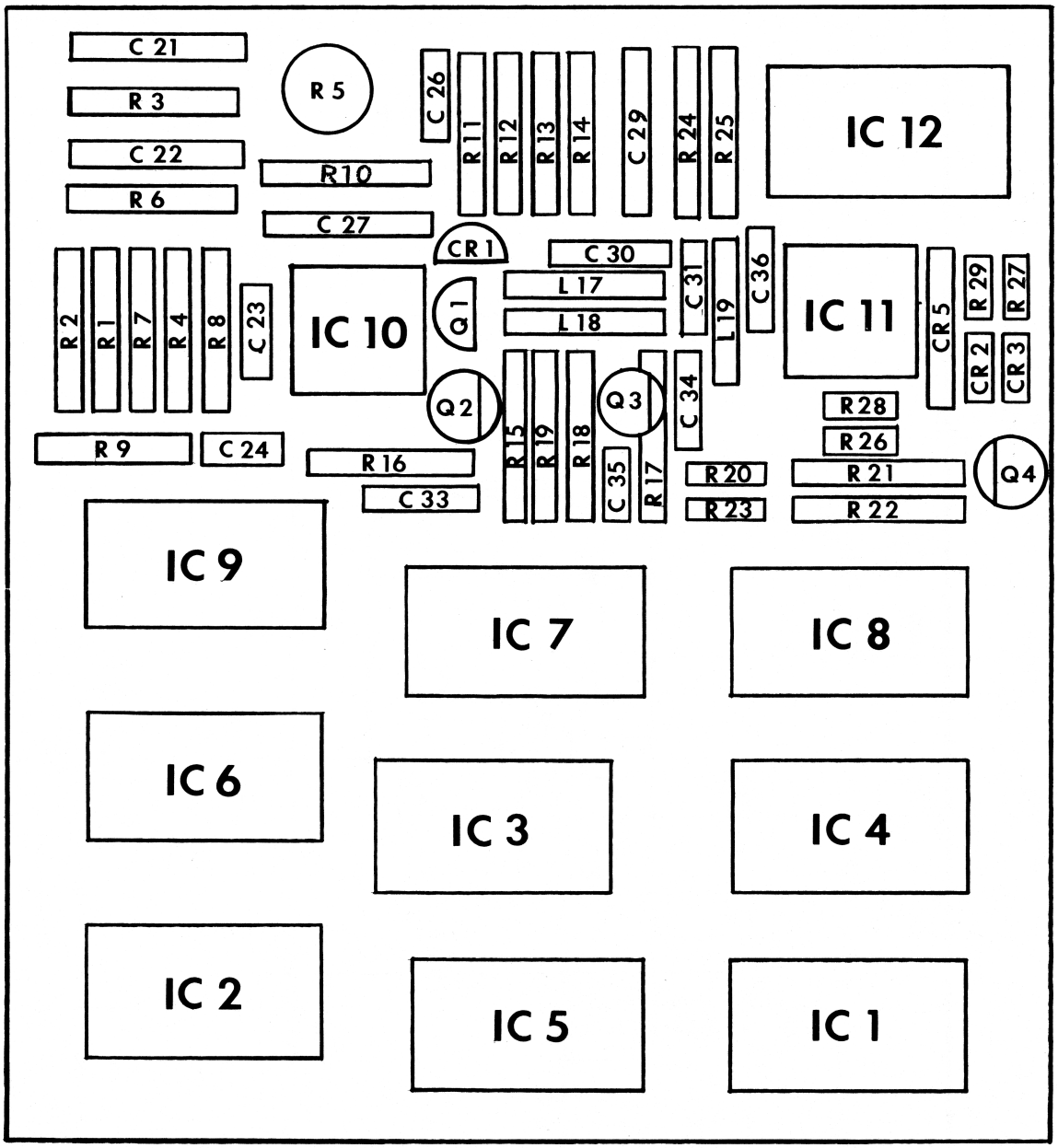
C 21
R 3
C 22
R 6
R 5
R10
C 27
C 26
R 11
R 12
R 13
R 14
C 29
R 24
R 25
IC 12
CR 1
C 30
L 17
L 18
C 31
L 19
C 36
IC 11
CR 5
R 29
R 27
CR 2
CR 3
R 2
R 1
R 7
R 4
R 8
C 23
IC 10
Q 1
Q 2
Q 3
C 34
R 28
R 26
R 9
C 24
R 16
C 33
R 15
R 19
R 18
C 35
R 17
R 20
R 23
R 21
R 22
Q4
IC 9
IC 7
IC 8
IC 6
IC 3
IC 4
IC 2
IC 5
IC 1

M29-2
FM REFERENCE
REV. C

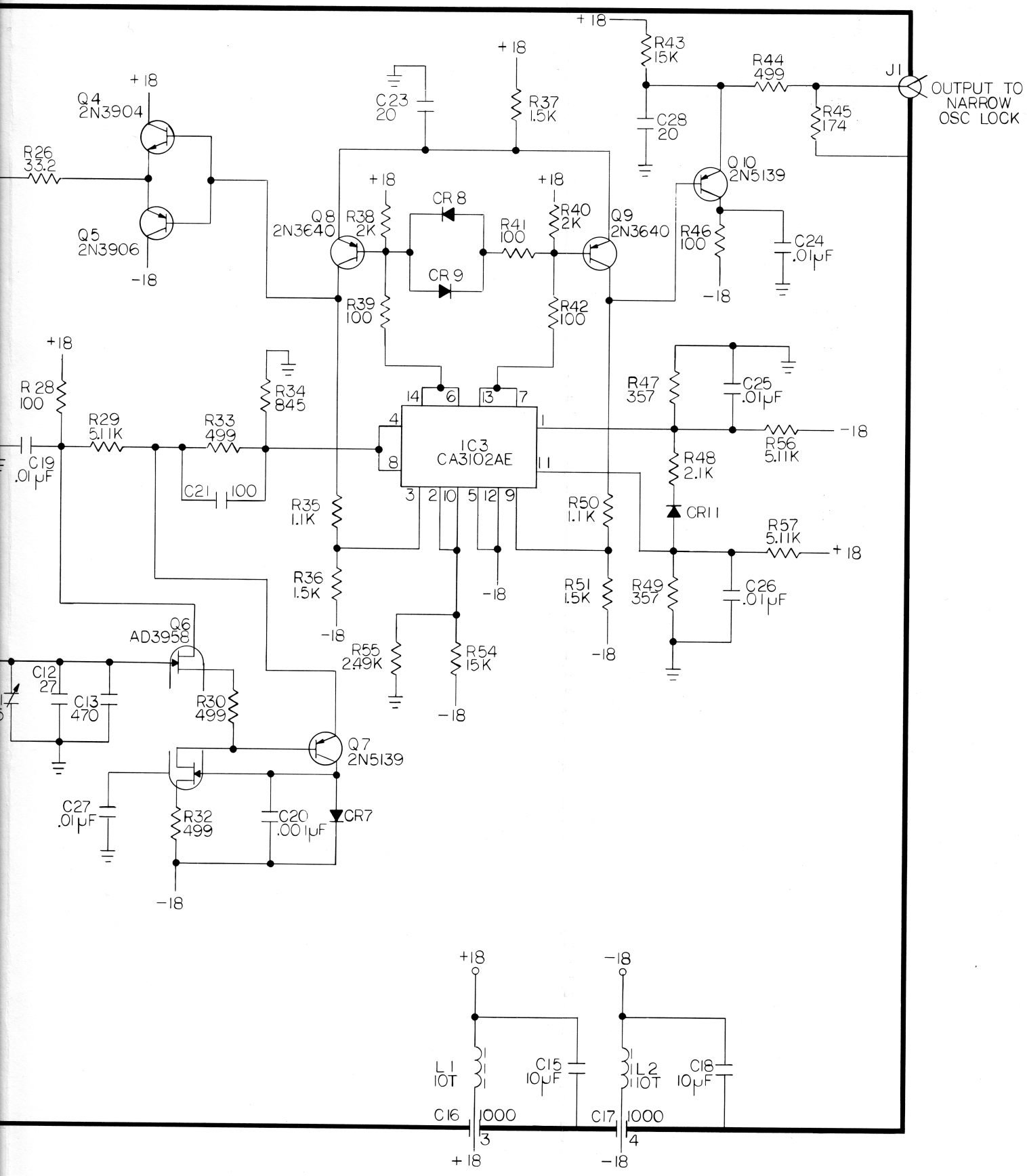

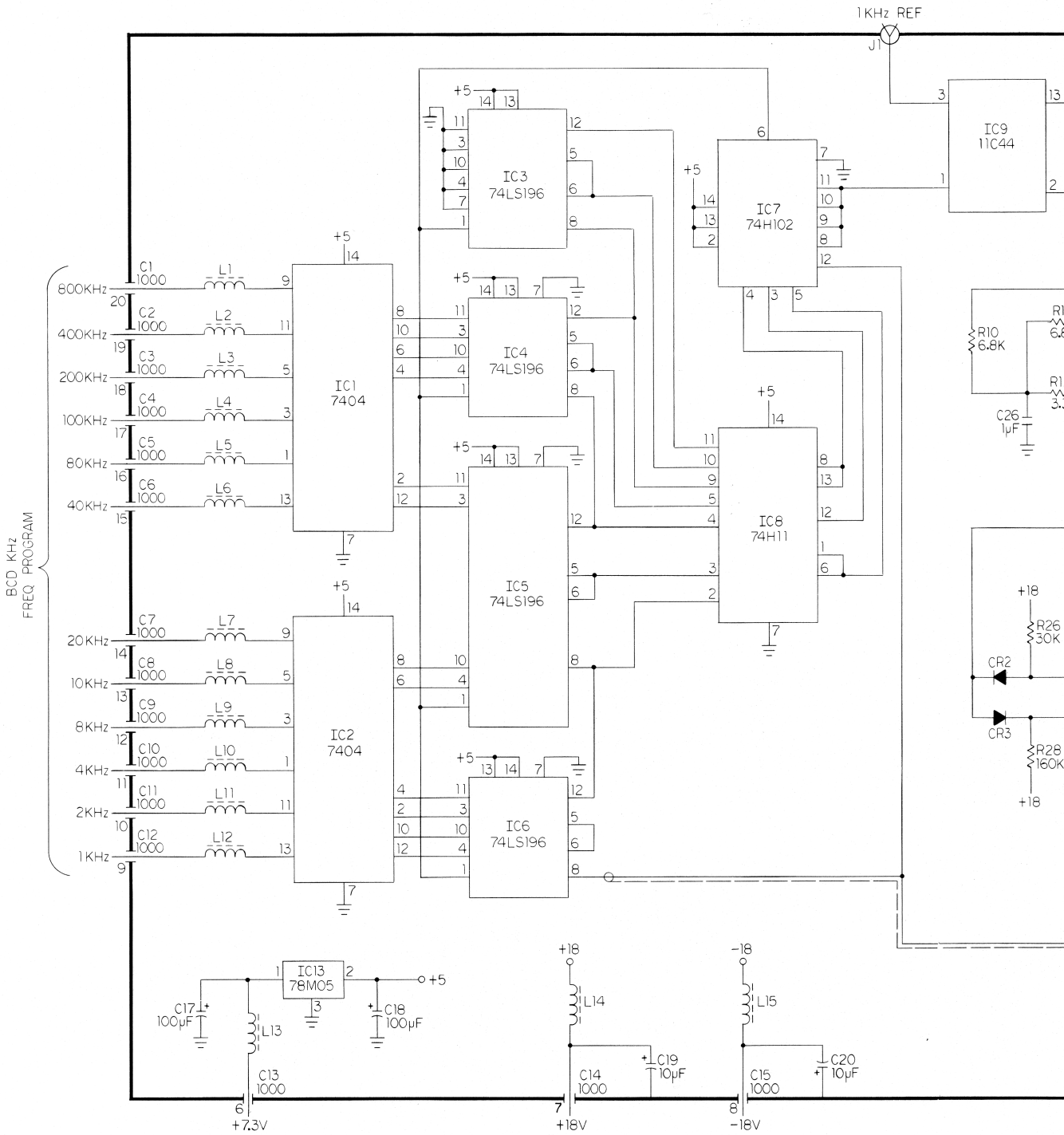
1KHz REF
J1
IC9
11C44
IC3
74LS196
IC7
74H102
IC4
74LS196
IC8
74H11
IC5
74LS196
IC6
74LS196
IC1
7404
IC2
7404
BCD KHz
FREQ PROGRAM
800KHz
400KHz
200KHz
100KHz
80KHz
40KHz
20KHz
10KHz
8KHz
4KHz
2KHz
1KHz
C1 1000
C2 1000
C3 1000
C4 1000
C5 1000
C6 1000
C7 1000
C8 1000
C9 1000
C10 1000
C11 1000
C12 1000
L1
L2
L3
L4
L5
L6
L7
L8
L9
L10
L11
L12
R10 6.8K
C26 1μF
R26 30K
R28 160K
CR2
CR3
IC13 78M05
C17 100μF
C18 100μF
L13
L14
L15
C19 10μF
C20 10μF
C13 1000
C14 1000
C15 1000
+7.3V
+18V
-18V

M31A
KHz STEPS Rev. B

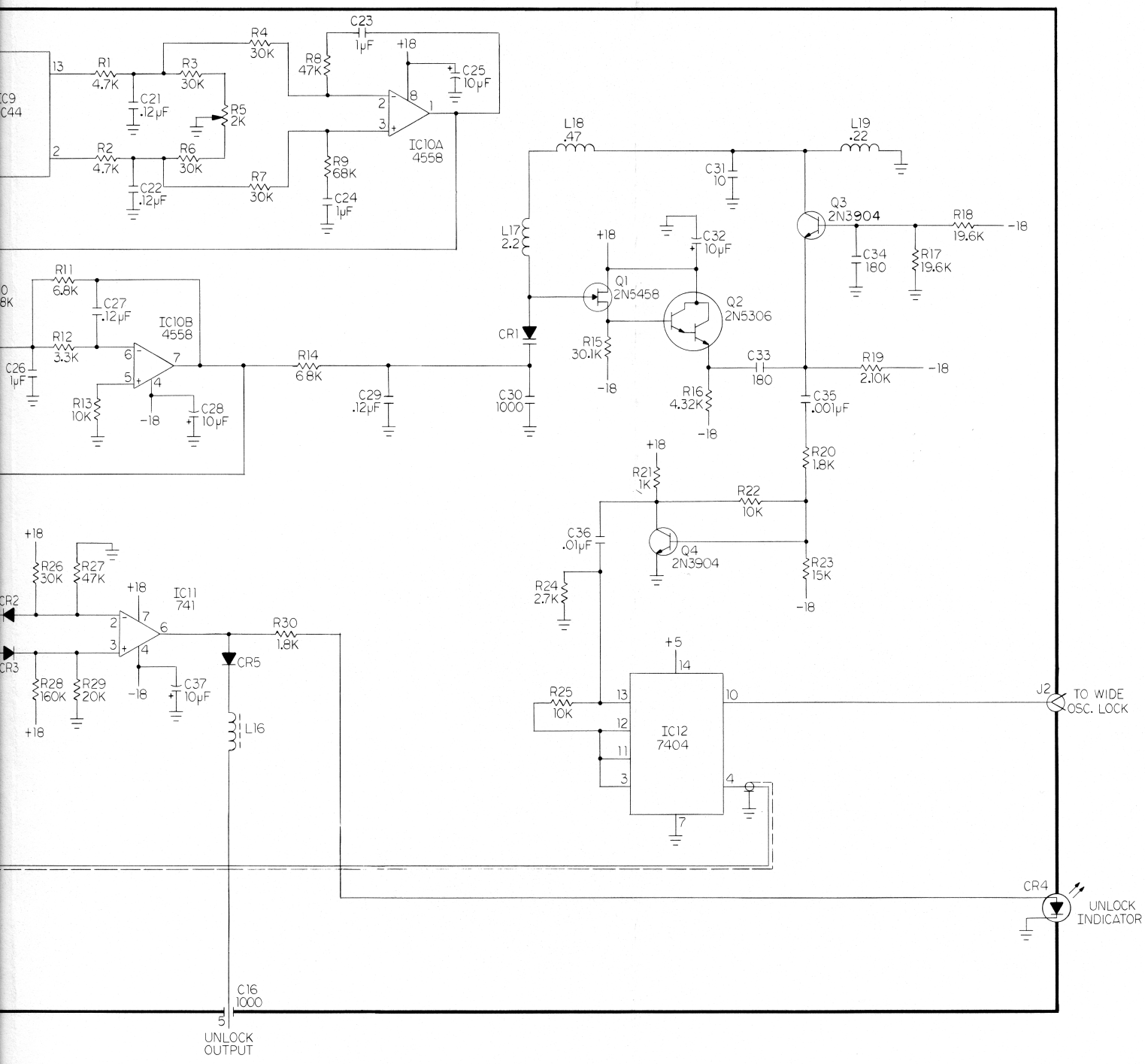

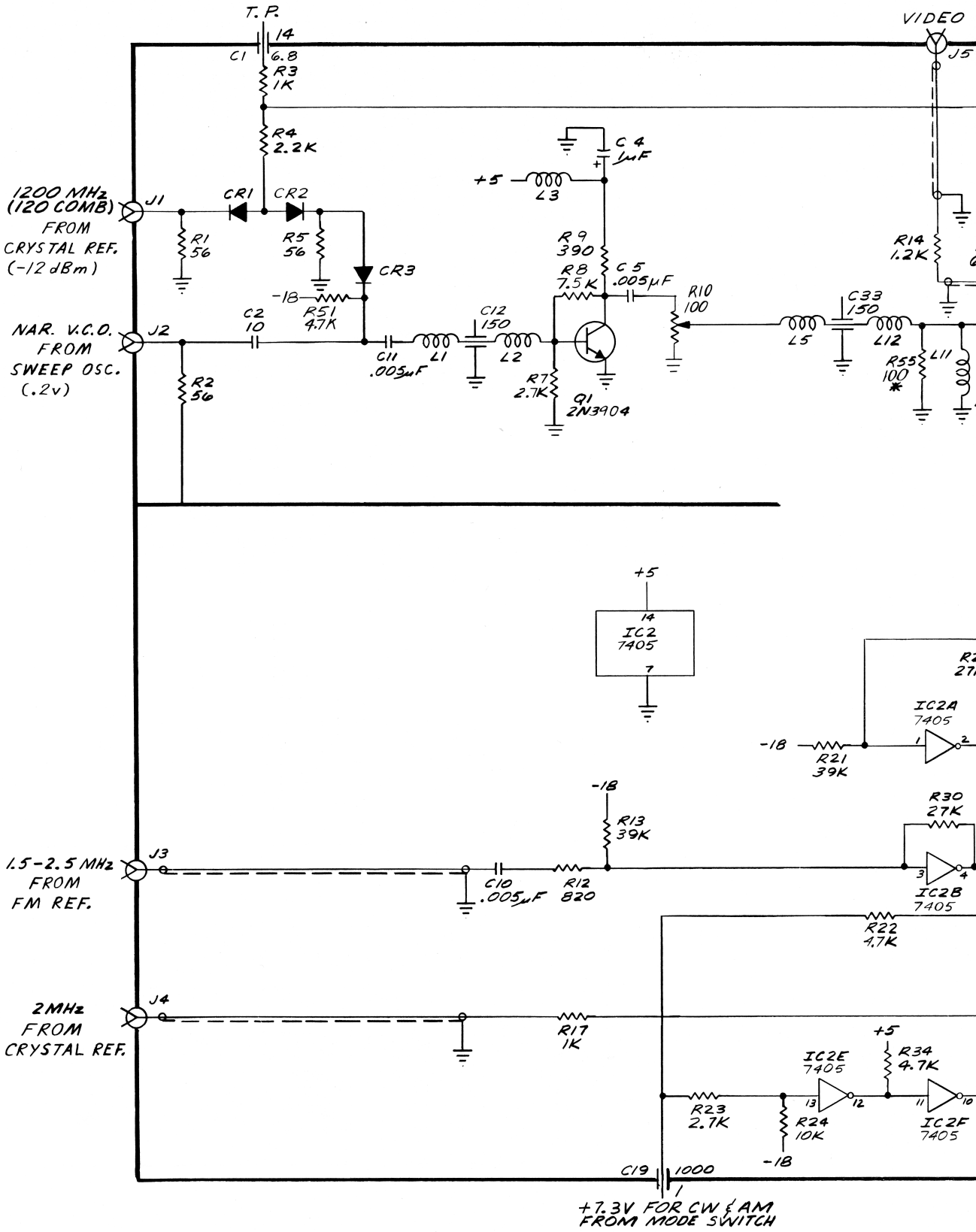
T. P.
14
C1
6.8
R3
1K
R4
2.2K
VIDEO
J5
C 4
1μF
+5
L3
1200 MHz
(120 COMB)
FROM
CRYSTAL REF.
(-12 dBm)
J1
CR1
CR2
R1
56
R5
56
CR3
R9
390
R8
7.5K
C 5
.005μF
R10
100
R14
1.2K
-18
R51
4.7K
C2
10
C12
150
NAR. V.C.O.
FROM
SWEEP OSC.
(.2v)
J2
C11
.005μF
L1
L2
L5
C33
150
L12
L11
R55
100
*
R2
56
R7
2.7K
Q1
2N3904
+5
14
IC2
7405
7
IC2A
7405
-18
R21
39K
-18
R13
39K
R30
27K
1.5-2.5 MHz
FROM
FM REF.
J3
C10
.005μF
R12
820
IC2B
7405
R22
4.7K
2MHz
FROM
CRYSTAL REF.
J4
R17
1K
+5
IC2E
7405
R34
4.7K
R23
2.7K
R24
10K
IC2F
7405
-18
C19
1000
+7.3V FOR CW & AM
FROM MODE SWITCH

M172

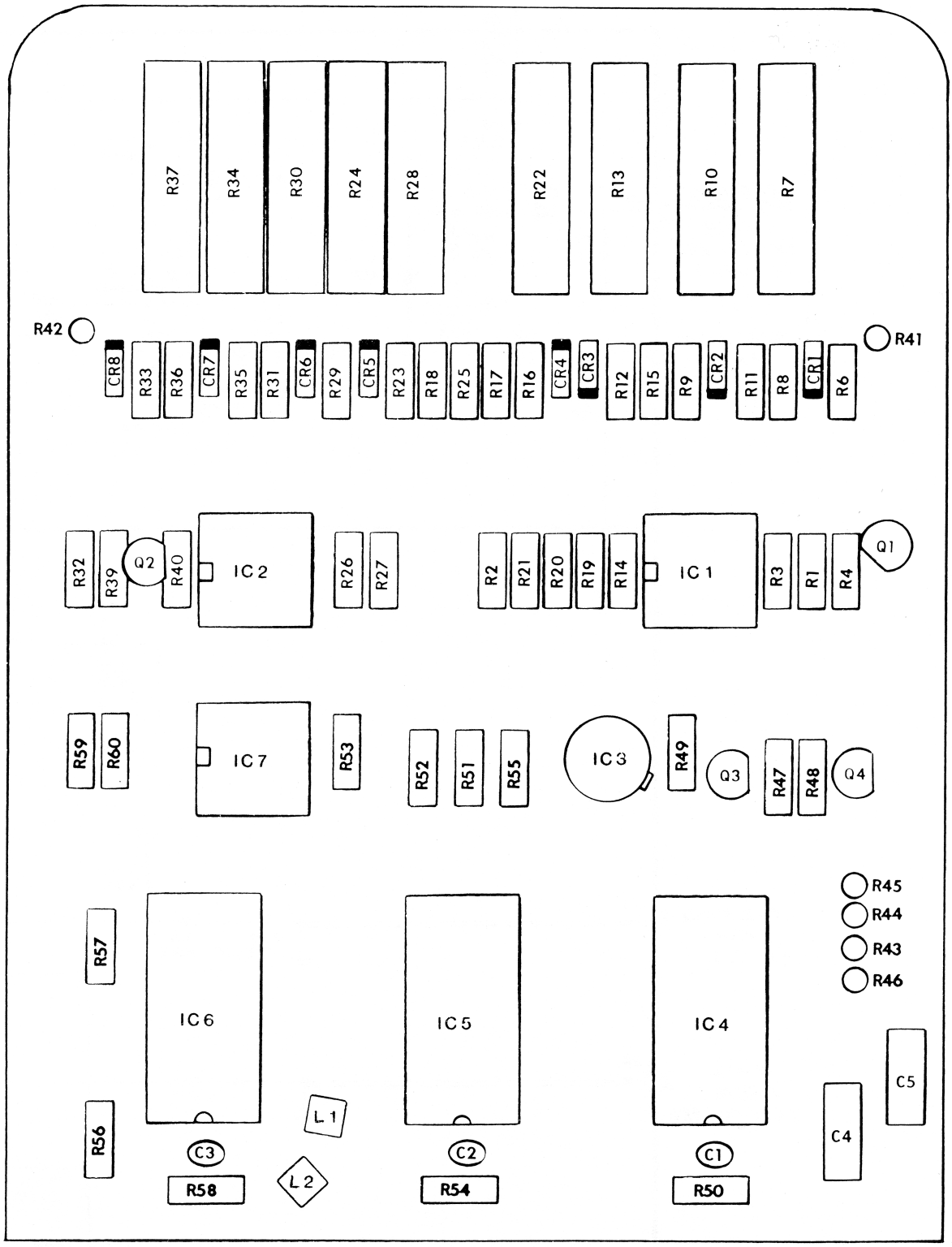
R37
R34
R30
R24
R28
R22
R13
R10
R7
R42
R41
CR8
R33
R36
CR7
R35
R31
CR6
R29
CR5
R23
R18
R25
R17
R16
CR4
CR3
R12
R15
R9
CR2
R11
R8
CR1
R6
R32
R39
Q2
R40
IC 2
R26
R27
R2
R21
R20
R19
R14
IC 1
R3
R1
R4
Q1
R59
R60
IC 7
R53
R52
R51
R55
IC 3
R49
Q3
R47
R48
Q4
R45
R44
R43
R46
R57
IC 6
IC 5
IC 4
C5
C4
L 1
L 2
C3
C2
C1
R56
R58
R54
R50

M33
NARROW OSCILLATOR LOCK

REV. L

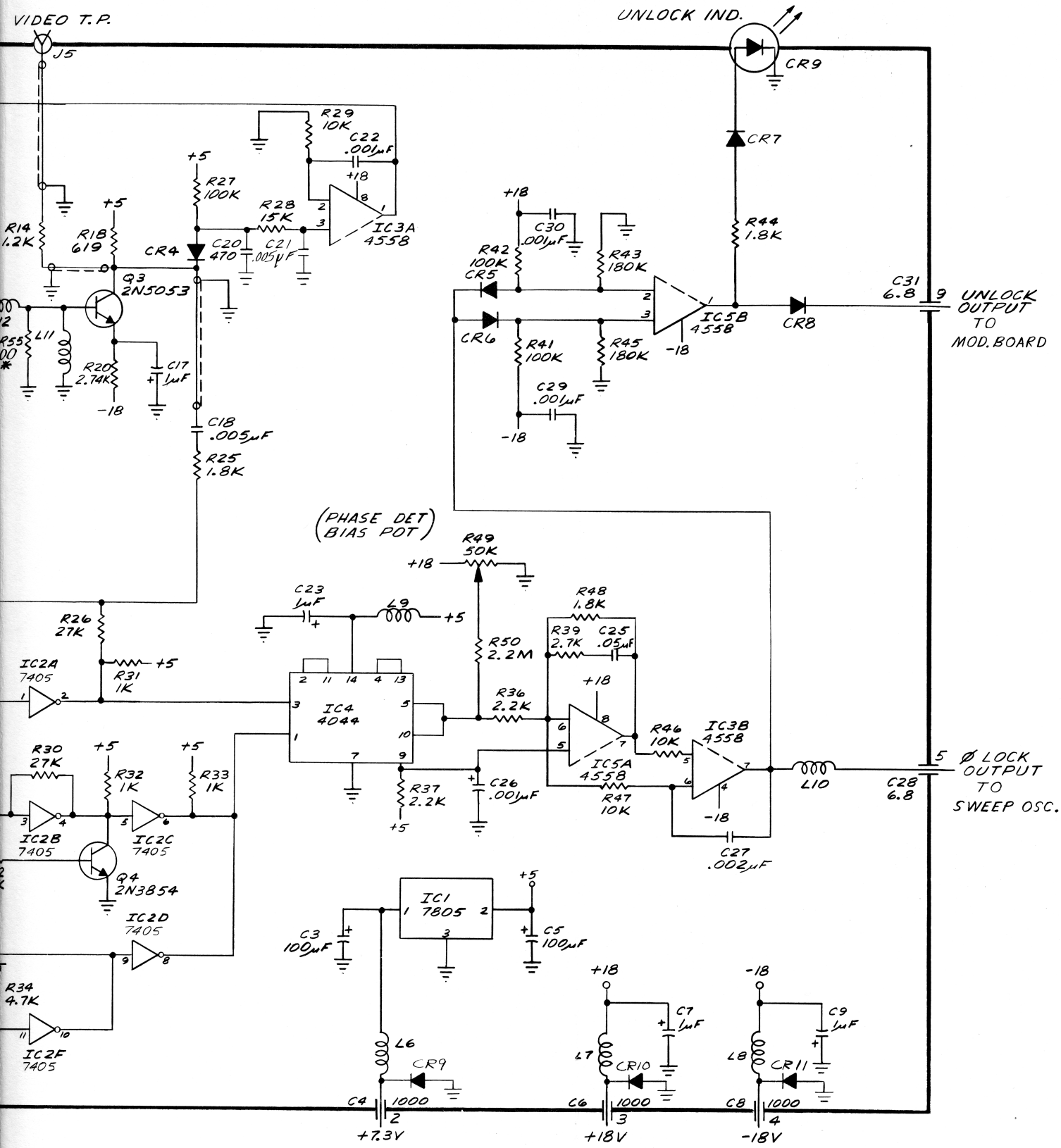

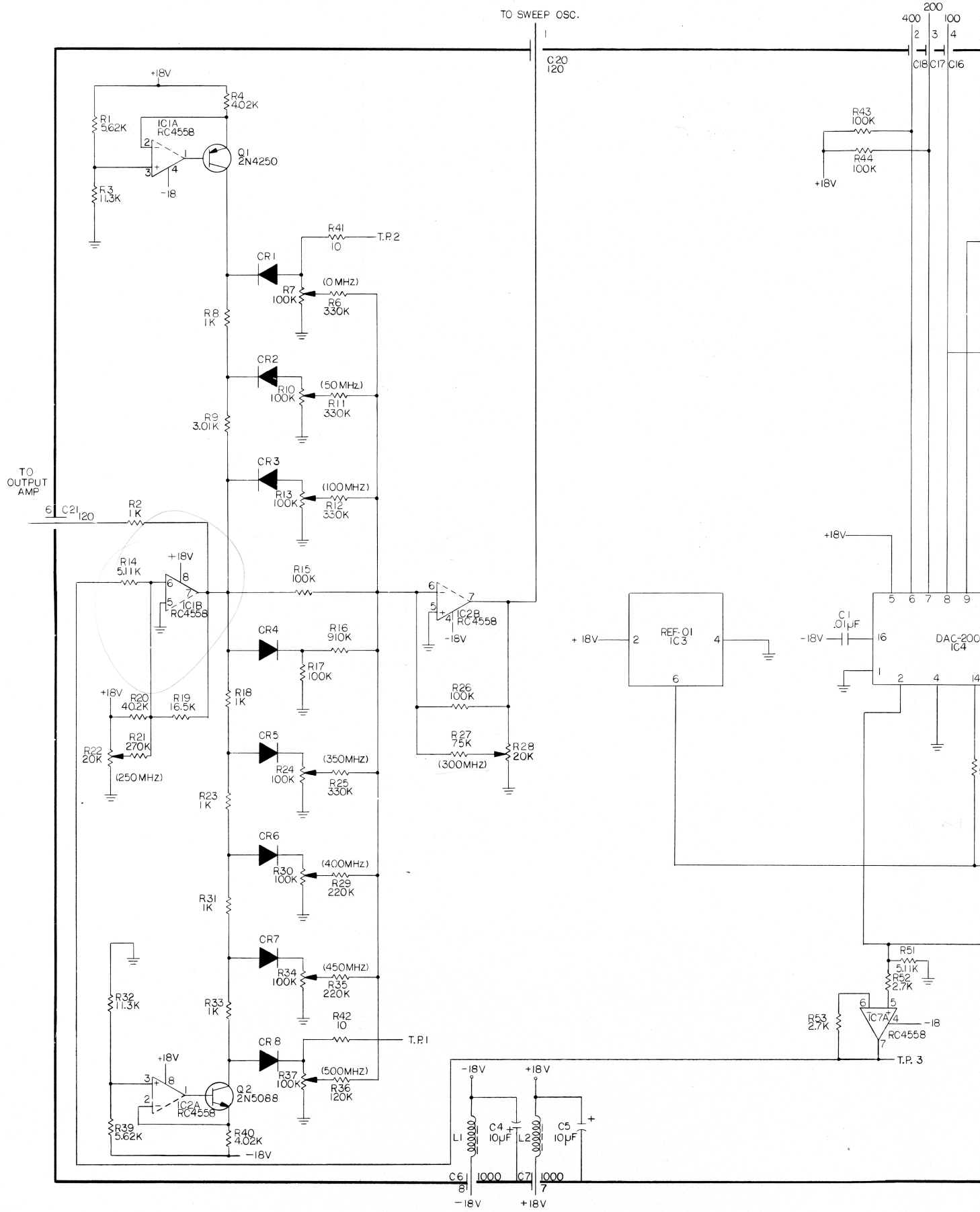
TO SWEEP OSC.
C20 120
200
400
100
C18
C17
C16
+18V
R4 402K
R1 5.62K
IC1A RC4558
Q1 2N4250
R3 11.3K
-18
R41 10
T.P.2
CR1
R7 100K
(0 MHz)
R6 330K
R8 1K
CR2
R10 100K
(50 MHz)
R11 330K
R9 3.01K
CR3
R13 100K
(100 MHz)
R12 330K
TO OUTPUT AMP
C21 120
R2 1K
R14 5.11K
+18V
IC1B RC4558
R15 100K
IC2B RC4558
-18V
CR4
R16 910K
R17 100K
R18 1K
+18V
R20 40.2K
R19 16.5K
R21 270K
R22 20K
(250 MHz)
CR5
R24 100K
(350MHz)
R25 330K
R23 1K
R26 100K
R27 75K
(300MHz)
R28 20K
CR6
R30 100K
(400MHz)
R29 220K
R31 1K
CR7
R34 100K
(450MHz)
R35 220K
R32 11.3K
R33 1K
R42 10
T.P.1
CR8
R37 100K
(500MHz)
R36 120K
+18V
IC2A RC4558
Q2 2N5088
R39 5.62K
R40 4.02K
-18V
REF-01 IC3
+18V
R43 100K
R44 100K
+18V
C1 .01μF
-18V
DAC-200 IC4
R51 5.11K
R52 2.7K
R53 2.7K
IC7A RC4558
-18
T.P. 3
L1
C4 10μF
L2
C5 10μF
C6 1000
C7 1000
-18V
+18V

M 172
SWEEP DRIVE / DAC

REV A

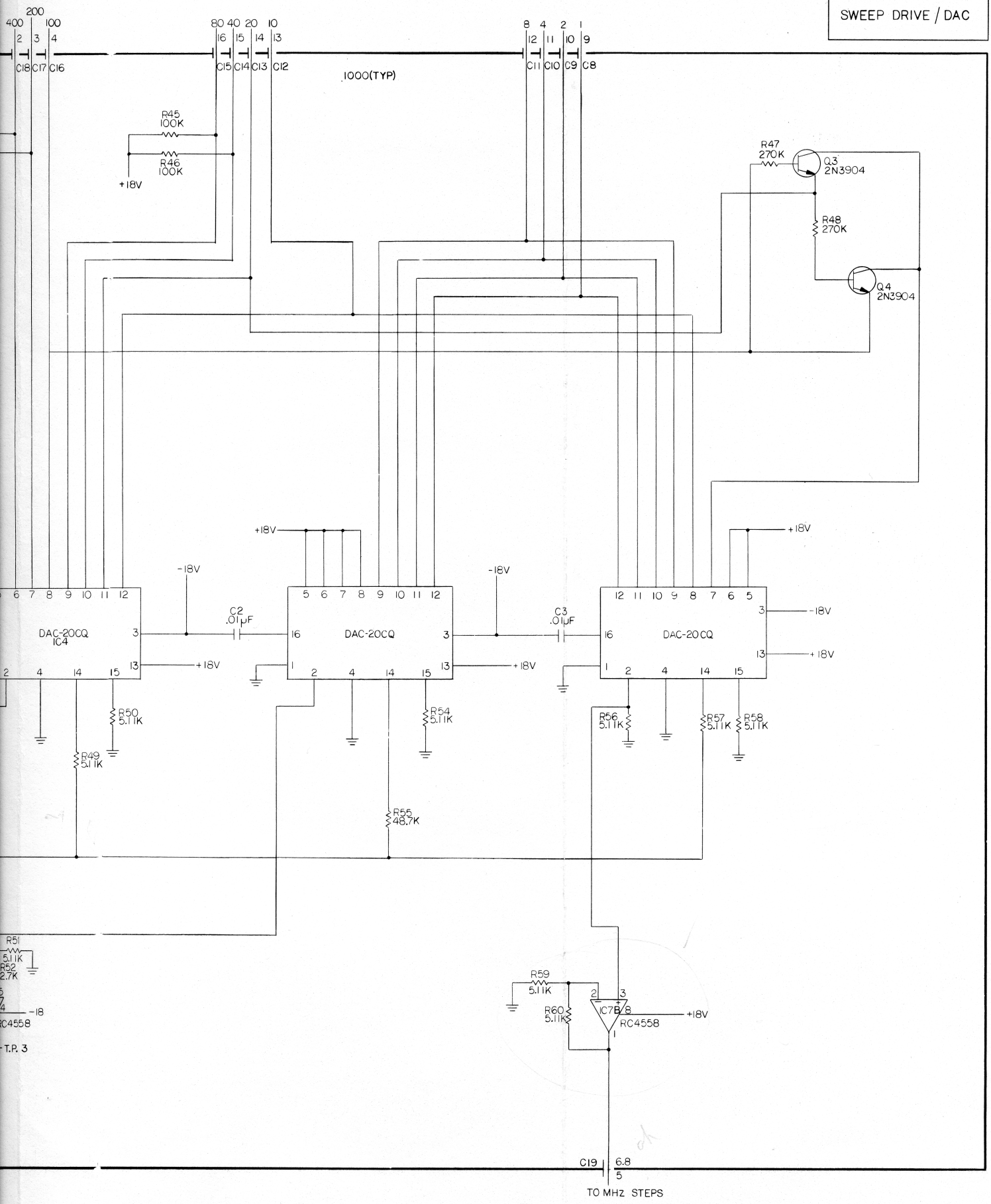

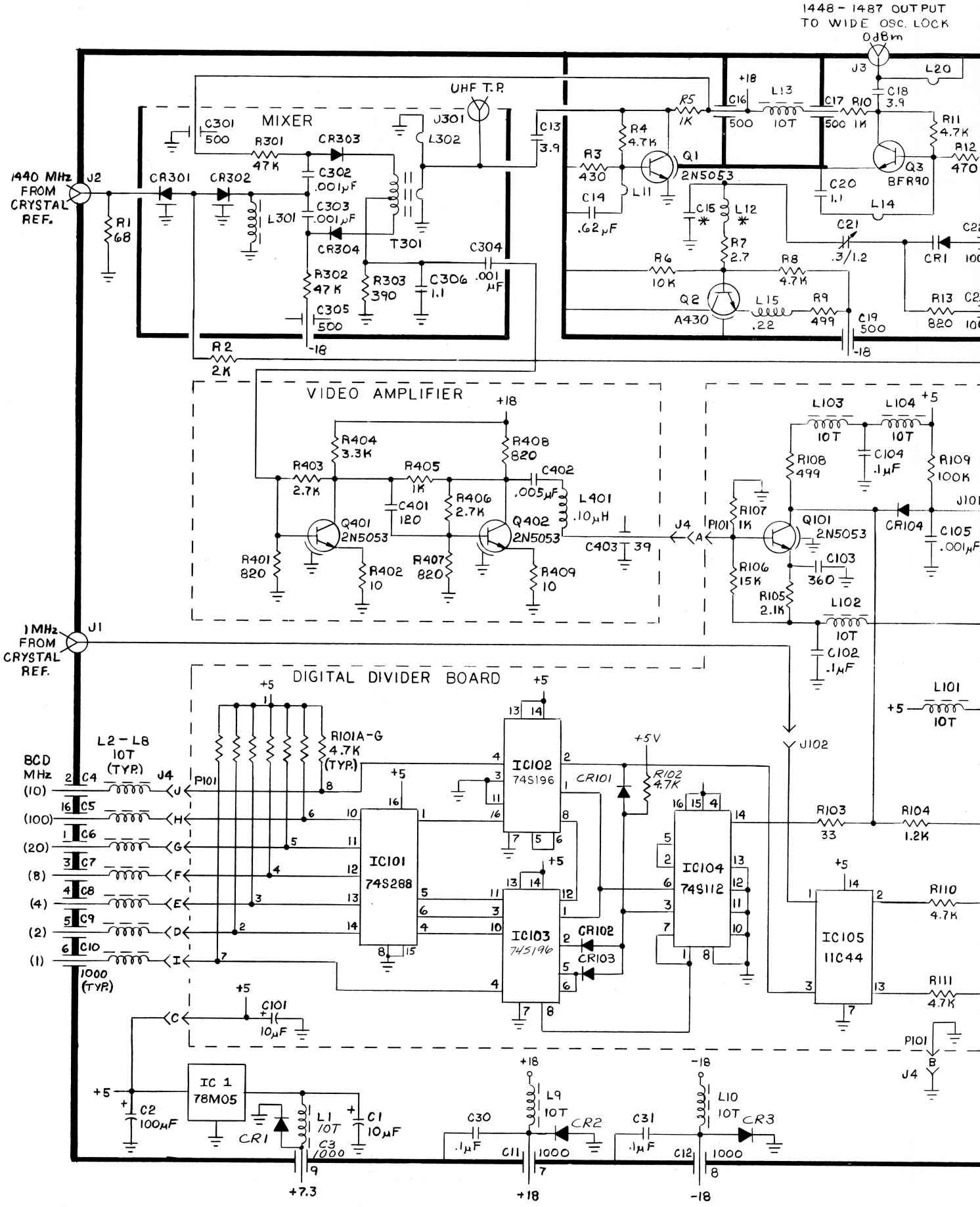
1448 - 1487 OUTPUT
TO WIDE OSC. LOCK
0dBm
J3
L20
C18
3.9
+18
L13
C16
500
10T
C17
500
R10
1K
R11
4.7K
R12
470
R5
1K
R4
4.7K
R3
430
Q1
2N5053
Q3
BFR90
C20
1.1
L14
C14
.62μF
L11
C15
L12
R7
2.7
C21
.3/1.2
CR1
R6
10K
R8
4.7K
Q2
A430
L15
.22
R9
499
C19
500
-18
R13
820
1440 MHz
FROM
CRYSTAL
REF.
J2
R1
68
CR301
CR302
L301
MIXER
C301
500
R301
47K
CR303
C302
.001μF
C303
.001μF
CR304
T301
L302
J301
UHF T.P.
C13
3.9
R302
47K
R303
390
C306
1.1
C304
.001
μF
C305
500
-18
R2
2K
VIDEO AMPLIFIER
+18
R404
3.3K
R408
820
R403
2.7K
R405
1K
C402
.005μF
L401
.10μH
C401
120
R406
2.7K
Q401
2N5053
Q402
2N5053
C403
39
J4
A
R401
820
R402
10
R407
820
R409
10
P101
R107
1K
Q101
2N5053
CR104
C105
.001μF
L103
10T
L104
10T
+5
R108
499
C104
.1μF
R109
100K
J101
R106
15K
C103
360
R105
2.1K
L102
10T
C102
.1μF
1 MHz
FROM
CRYSTAL
REF.
J1
DIGITAL DIVIDER BOARD
L2 - L8
10T
(TYP.)
BCD
MHz
(10)
(100)
(20)
(8)
(4)
(2)
(1)
J4
P101
R101A-G
4.7K
(TYP.)
IC101
74S288
IC102
74S196
IC103
74S196
IC104
74S112
IC105
11C44
CR101
CR102
CR103
R102
4.7K
+5V
J102
L101
10T
R103
33
R104
1.2K
R110
4.7K
R111
4.7K
1000
(TYP.)
C101
10μF
IC 1
78M05
C2
100μF
CR1
L1
10T
C3
1000
C1
10μF
+7.3
C30
.1μF
L9
10T
CR2
C11
1000
+18
C31
.1μF
L10
10T
CR3
C12
1000
-18

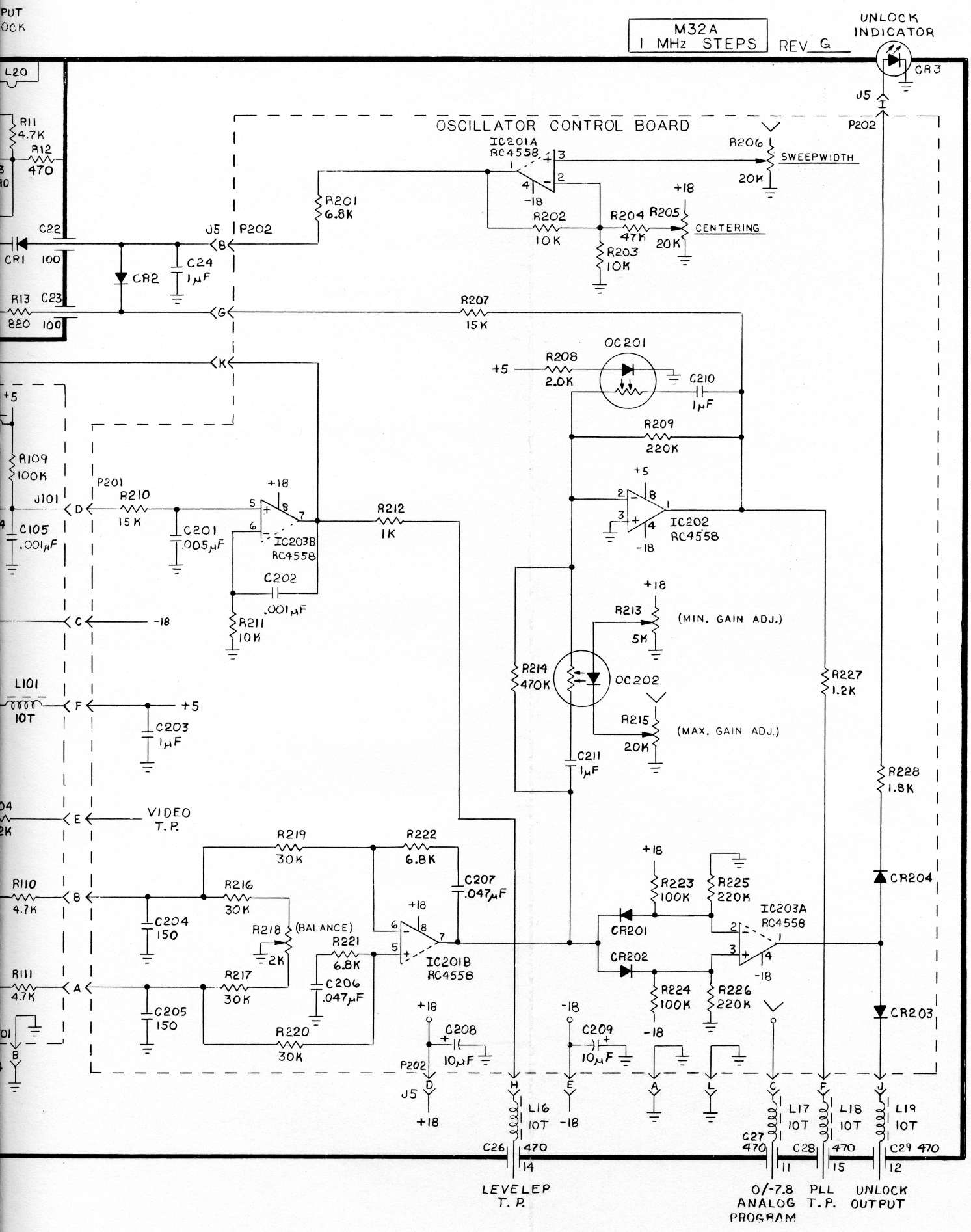
M32A
1 MHz STEPS
REV G
UNLOCK INDICATOR
CR3
J5
P202
OSCILLATOR CONTROL BOARD
IC201A RC4558
R206
SWEEPWIDTH
20K
R201 6.8K
R202 10K
R204 47K
R205 20K
CENTERING
R203 10K
+18
-18
C22
CR1 100
CR2
C24 1μF
R13 820
C23 100
R207 15K
OC201
R208 2.0K
C210 1μF
R209 220K
IC202 RC4558
R109 100K
J101
P201
R210 15K
C105 .001μF
C201 .005μF
IC2038 RC4558
C202 .001μF
R211 10K
R212 1K
R213 5K
(MIN. GAIN ADJ.)
R214 470K
OC202
R215 20K
(MAX. GAIN ADJ.)
R227 1.2K
C211 1μF
R228 1.8K
L101 10T
C203 1μF
VIDEO T.P.
R219 30K
R222 6.8K
C207 .047μF
R110 4.7K
R216 30K
C204 150
R218 2K
(BALANCE)
R221 6.8K
IC201B RC4558
R111 4.7K
R217 30K
C205 150
C206 .047μF
R220 30K
C208 10μF
C209 10μF
R223 100K
R225 220K
IC203A RC4558
CR201
CR202
CR204
CR203
R224 100K
R226 220K
L16 10T
L17 10T
L18 10T
L19 10T
C26 470
C27 470
C28 470
C29 470
LEVELEP T.P.
0/-7.8 ANALOG PROGRAM
PLL T.P.
UNLOCK OUTPUT

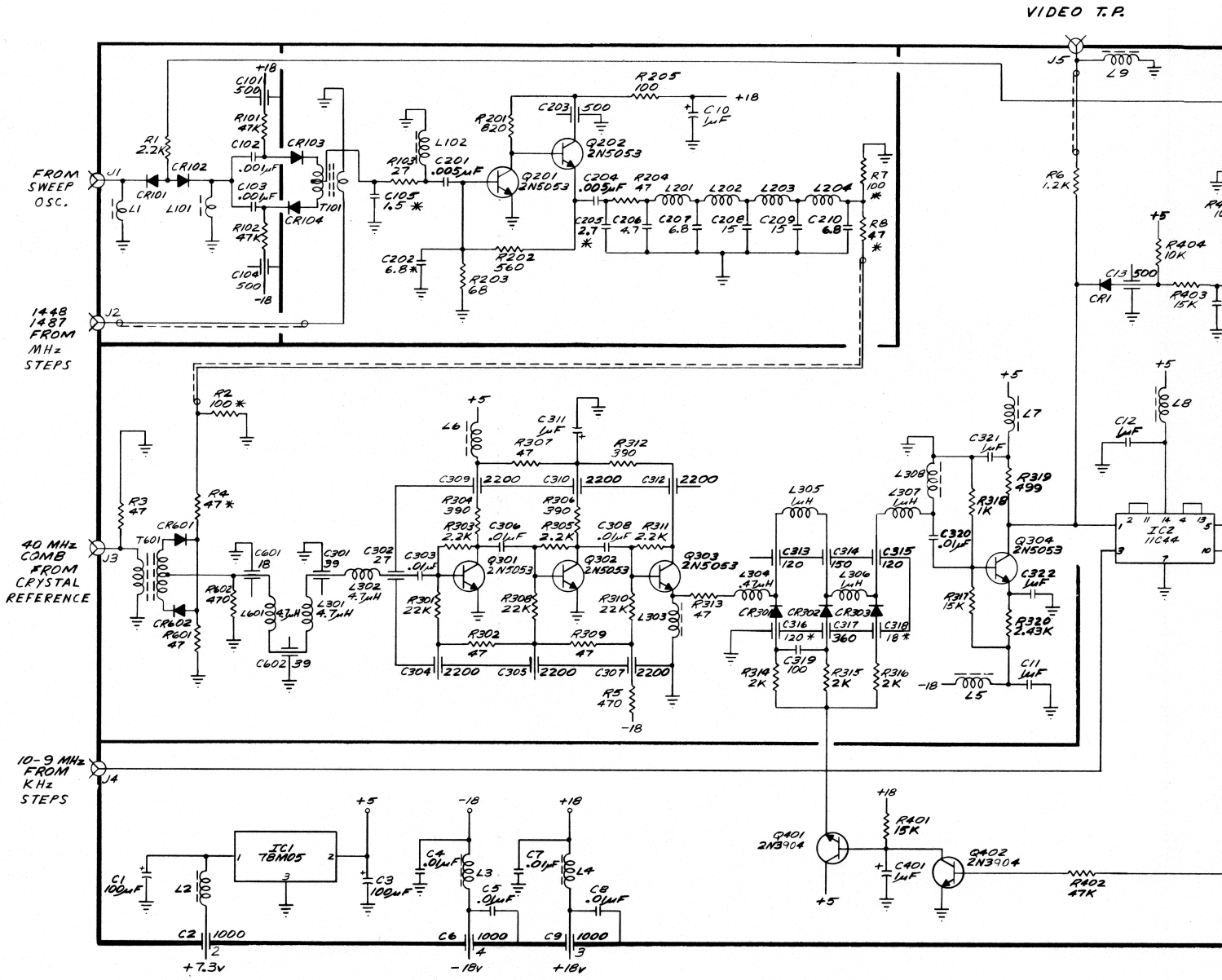
VIDEO T.P.
J5
L9
FROM SWEEP OSC.
J1
CR101
CR102
L1
L101
R1 2.2K
C101 500
R101 47K
C102 .001μF
C103 .001μF
R102 47K
C104 500
CR103
CR104
T101
+18
-18
L102
R103 27
C105 1.5*
C201 .005μF
R201 820
C203 500
R205 100
C10 1μF
Q201 2N5053
Q202 2N5053
C204 .005μF
R204 47
L201
L202
L203
L204
R7 100*
R8 47*
C205 2.7*
C206 4.7
C207 6.8
C208 15
C209 15
C210 6.8
C202 6.8*
R202 560
R203 68
R6 1.2K
+5
R404 10K
C13 500
CR1
R403 15K
1448
1487
FROM
MHz
STEPS
J2
R2 100*
R3 47
R4 47*
40 MHz
COMB
FROM
CRYSTAL
REFERENCE
J3
CR601
T601
C601 18
C301 39
C302 27
L302 4.7μH
L301 4.7μH
L601 4.7μH
C602 39
R602 470
CR602
R601 47
L6
C311 1μF
R307 47
R312 390
C309 2200
C310 2200
C312 2200
R304 390
R306 390
R303 2.2K
C306 .01μF
R305 2.2K
C308 .01μF
R311 2.2K
C303 .01μF
Q301 2N5053
Q302 2N5053
Q303 2N5053
R301 22K
R308 22K
R310 22K
R313 47
L303
R302 47
R309 47
C304 2200
C305 2200
C307 2200
R5 470
L305 1μH
L307 1μH
L308
L304 .47μH
L306 1μH
C313 120
C314 150
C315 120
CR301
CR302
CR303
C316 120*
C317 360
C318 18*
C319 100
R314 2K
R315 2K
R316 2K
L7
C321 1μF
R319 499
R318 1K
C320 .01μF
Q304 2N5053
C322 1μF
R317 15K
R320 2.43K
C11 1μF
L5
L8
C12 1μF
IC2 11C44
10-9 MHz
FROM
KHz
STEPS
J4
IC1 78M05
C1 100μF
L2
C3 100μF
C2 1000
+7.3v
C4 .01μF
L3
C5 .01μF
C6 1000
-18v
C7 .01μF
L4
C8 .01μF
C9 1000
+18v
Q401 2N3904
R401 15K
C401 1μF
Q402 2N3904
R402 47K

WIDE OSCILLATOR LOCK
M34

REV. H

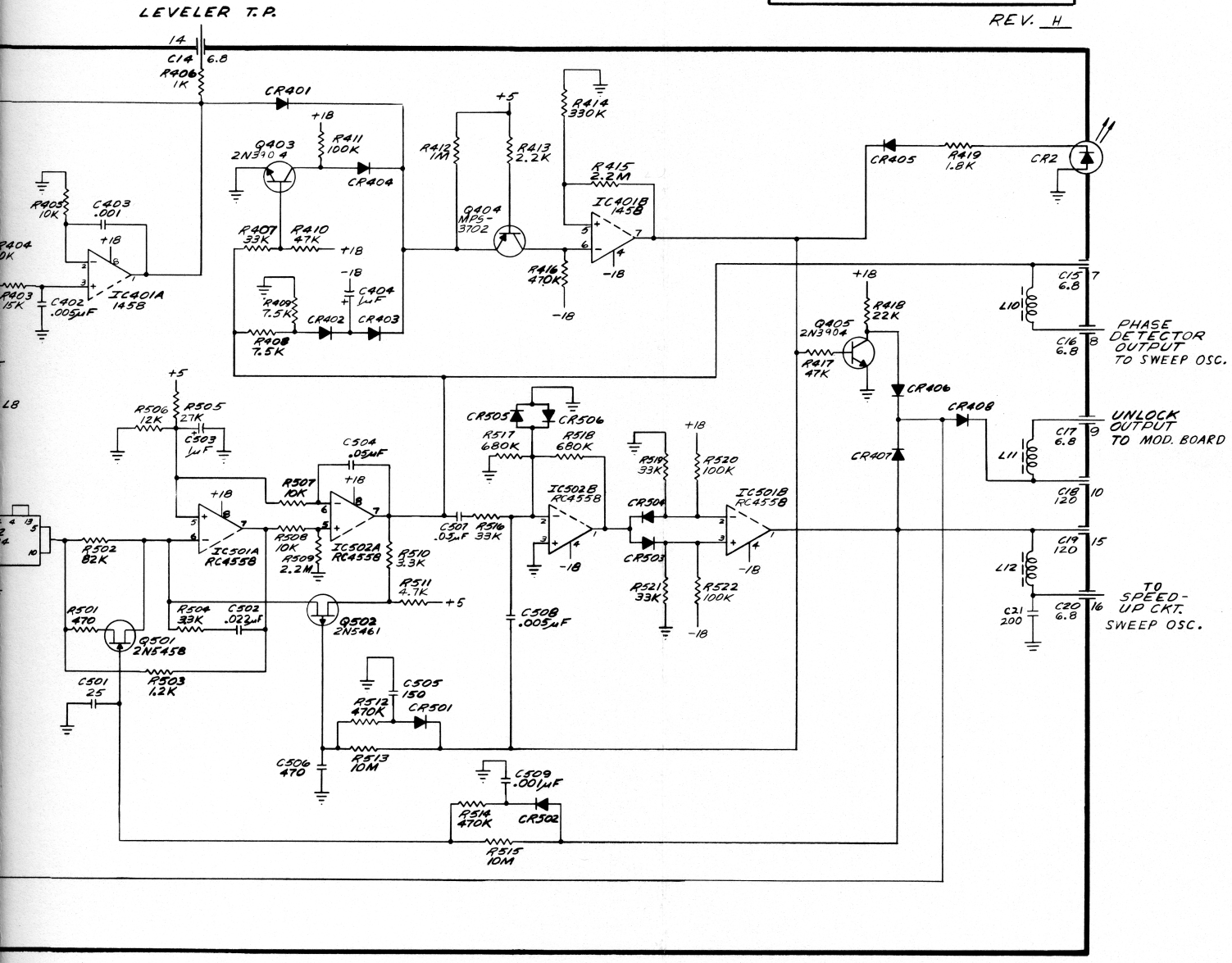

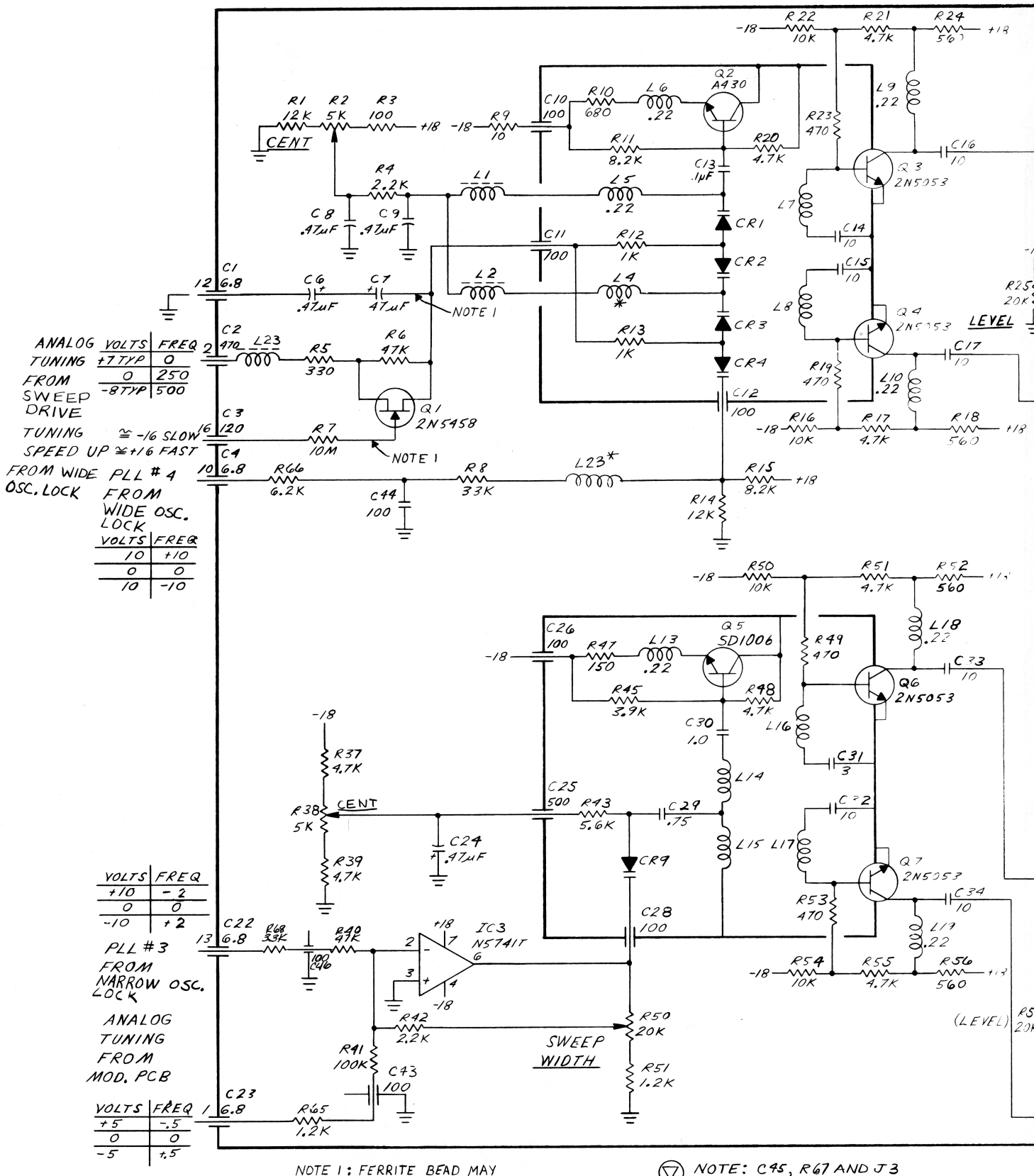

NOTE 1 : FERRITE BEAD MAY BE ADDED AT THIS POINT

▽ NOTE: C45, R67 AND J3 USED ON M9W-1 ONLY

C315

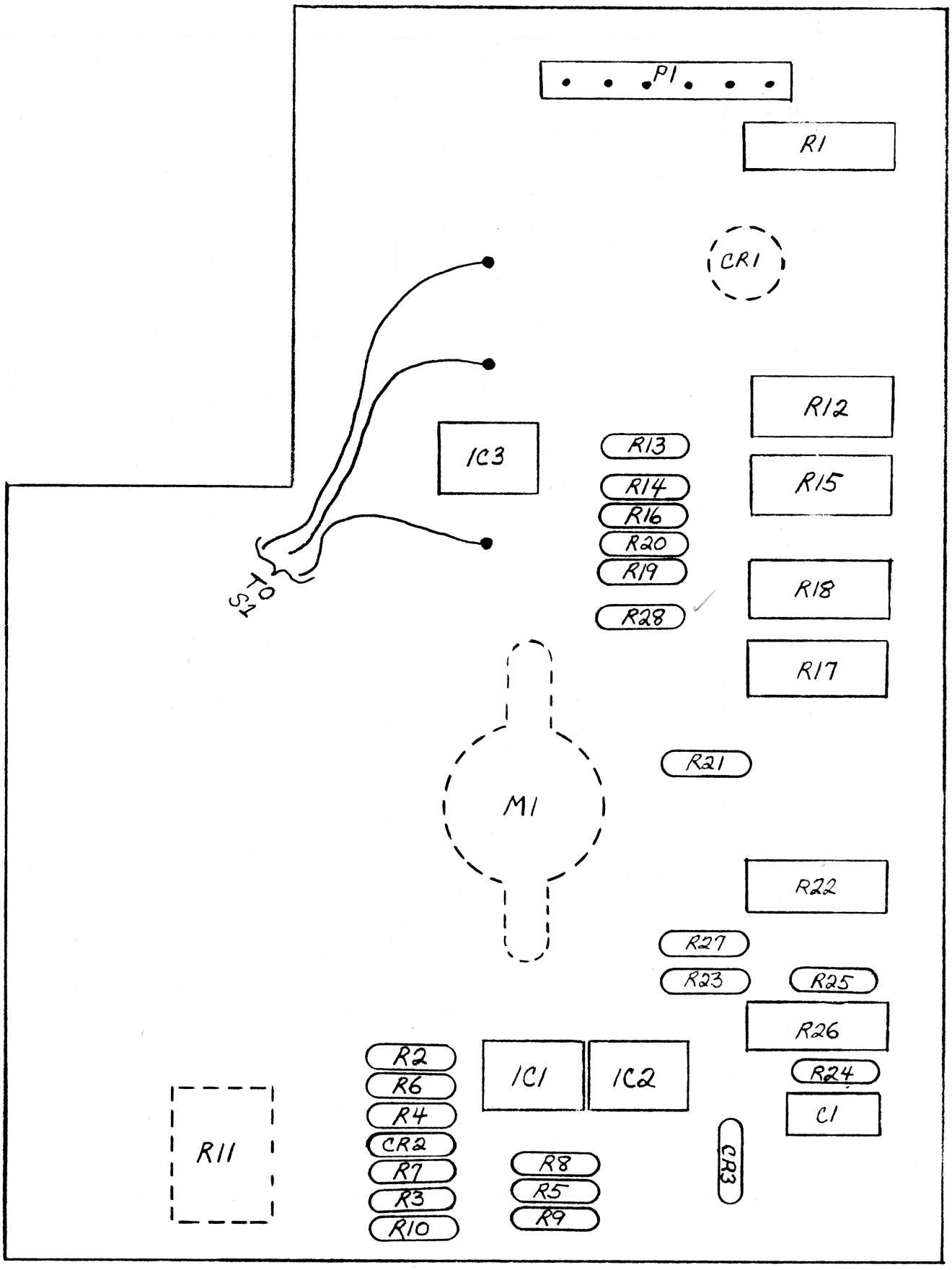
P1
R1
CR1
R12
IC3
R13
R15
R14
R16
R20
R19
R18
R28
TO S1
R17
R21
M1
R22
R27
R23
R25
R26
R24
C1
R2
R6
R4
CR2
R7
R3
R10
IC1
IC2
R11
R8
R5
R9
CR3

WIDE SWEEP OSCILLATOR
1198 TO 1718 MHz
M9W / M9W-1

REV. M

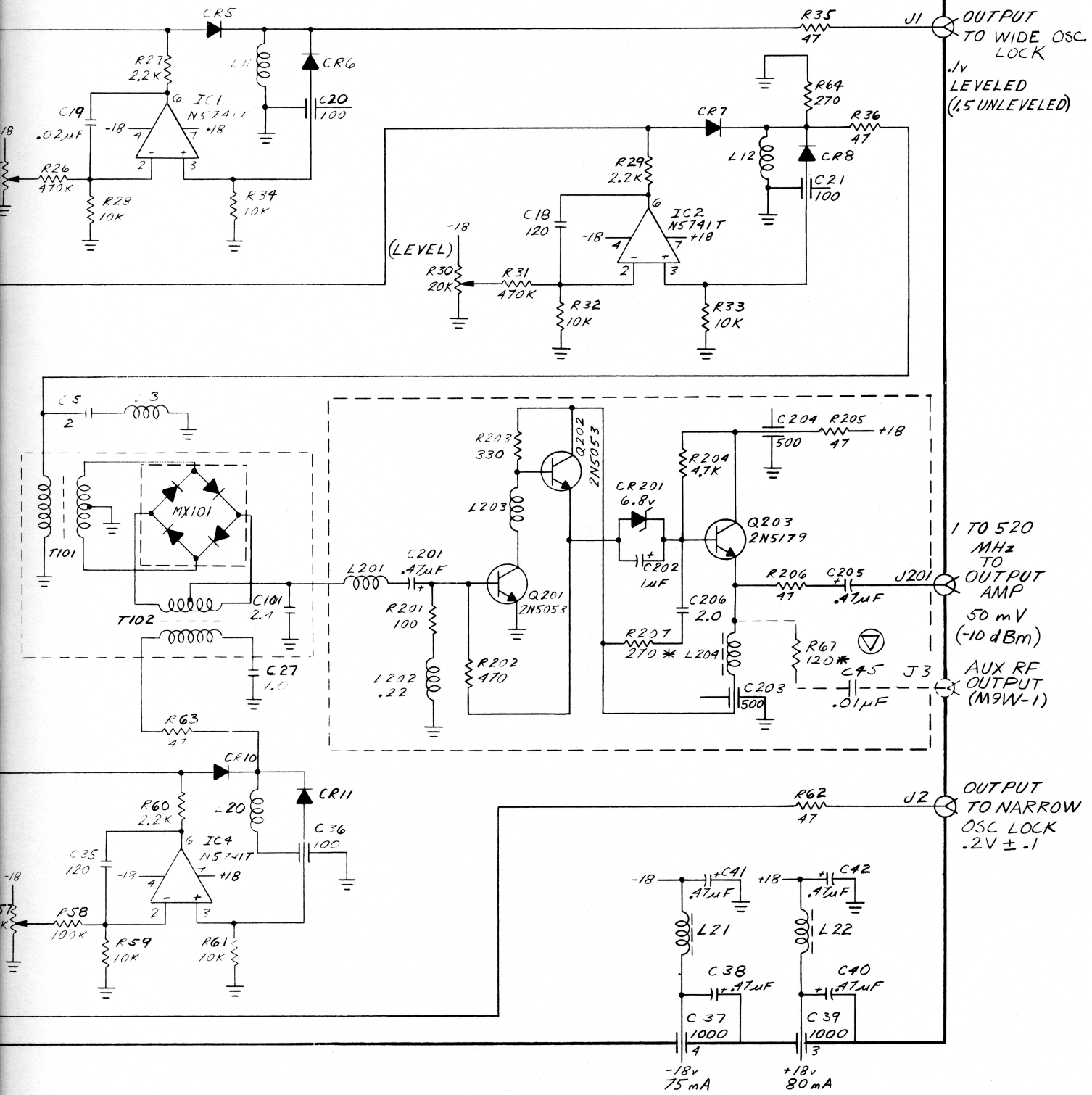

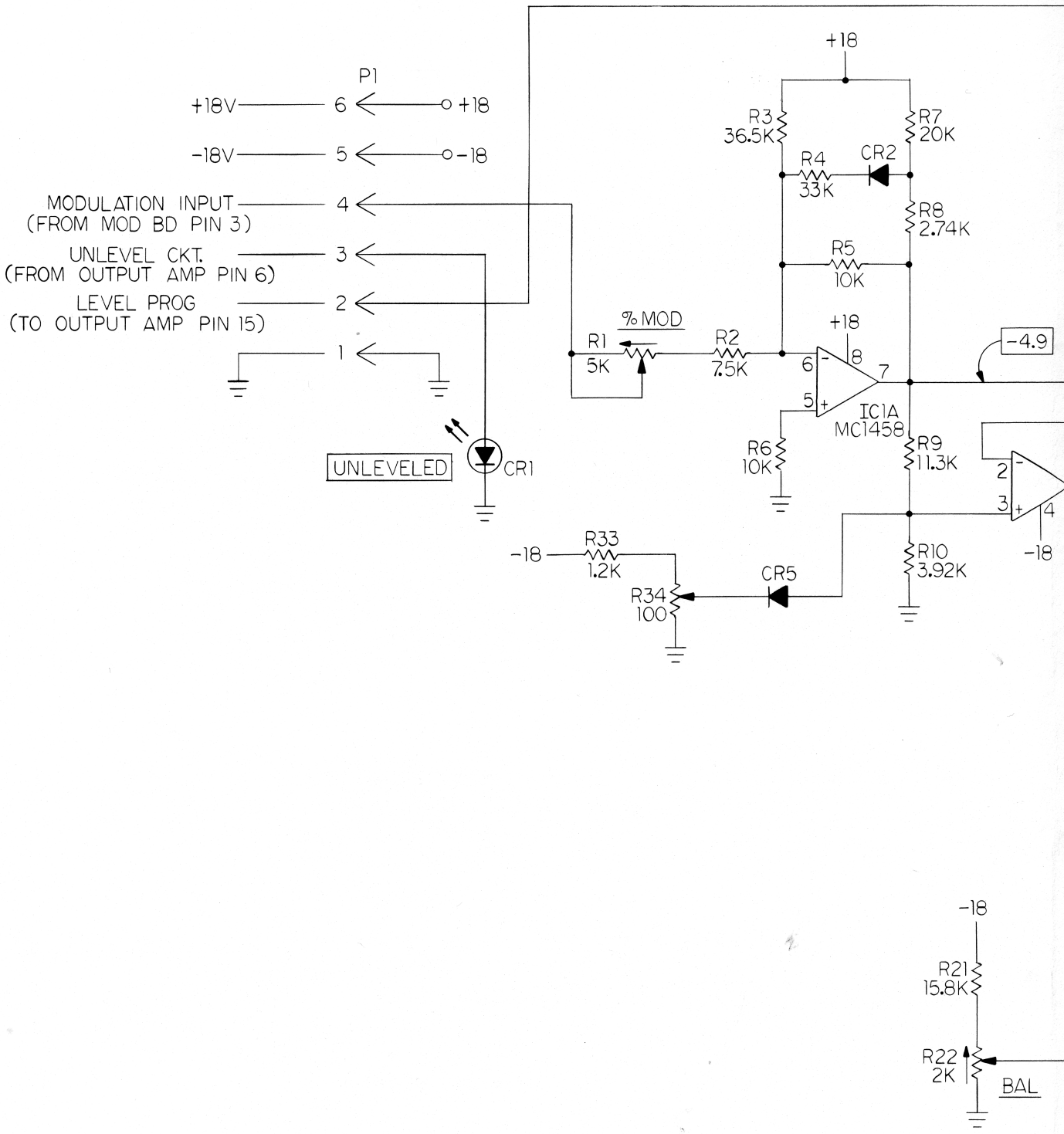
P1
+18V
6
+18
-18V
5
-18
MODULATION INPUT
(FROM MOD BD PIN 3)
4
UNLEVEL CKT.
(FROM OUTPUT AMP PIN 6)
3
LEVEL PROG
(TO OUTPUT AMP PIN 15)
2
1
UNLEVELED
CR1
+18
R3
36.5K
R7
20K
R4
33K
CR2
R8
2.74K
R5
10K
% MOD
R1
5K
R2
7.5K
IC1A
MC1458
R6
10K
R9
11.3K
-4.9
R33
1.2K
R34
100
CR5
R10
3.92K
-18
R21
15.8K
R22
2K
BAL

C315
METER BOARD REV. G

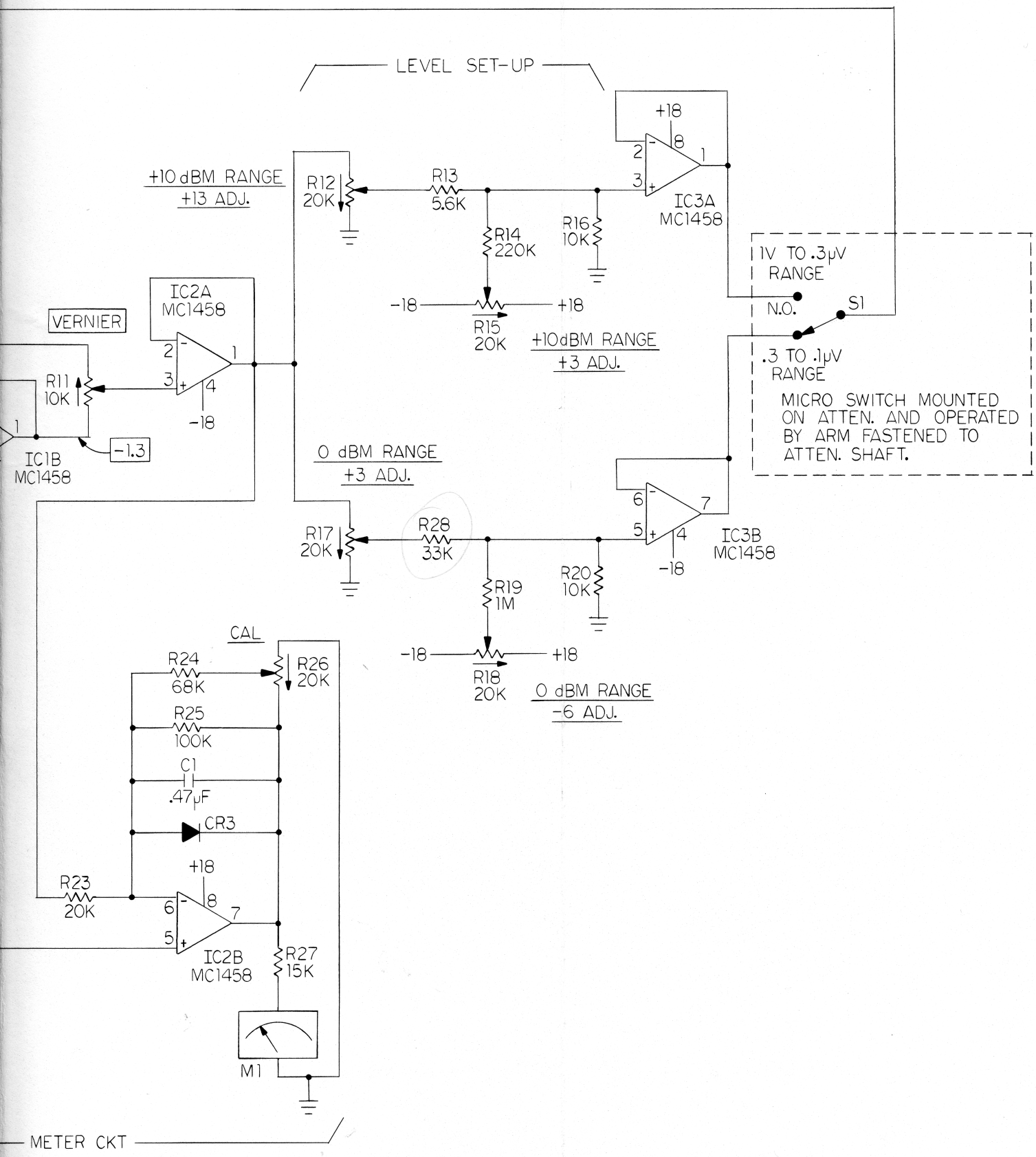

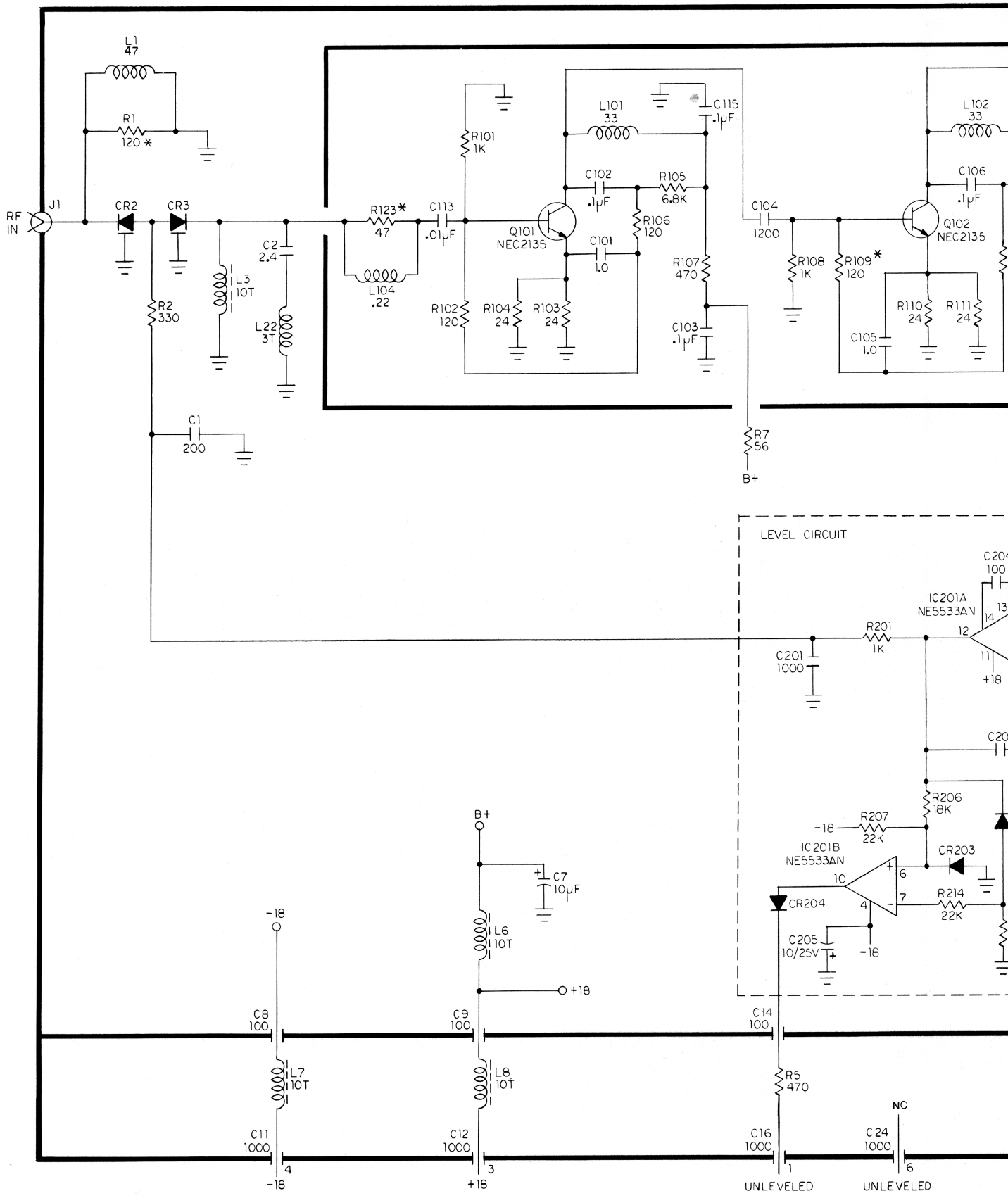
L1
47
R1
120 *
RF
IN
J1
CR2
CR3
R2
330
L3
10T
C2
2.4
L22
3T
C1
200
R123*
47
L104
.22
C113
.01μF
R101
1K
Q101
NEC2135
L101
33
C115
.1μF
C102
.1μF
R105
6.8K
R106
120
C101
1.0
R102
120
R104
24
R103
24
R107
470
C103
.1μF
R7
56
B+
C104
1200
R108
1K
R109*
120
Q102
NEC2135
L102
33
C106
.1μF
R110
24
R111
24
C105
1.0
LEVEL CIRCUIT
C204
100
IC201A
NE5533AN
R201
1K
C201
1000
+18
C20
R206
18K
-18
R207
22K
IC201B
NE5533AN
CR203
CR204
R214
22K
C205
10/25V
-18
B+
C7
10μF
L6
10T
+18
-18
C8
100
C9
100
C14
100
L7
10T
L8
10T
R5
470
C11
1000
C12
1000
C16
1000
C24
1000
NC
4
-18
3
+18
1
UNLEVELED
6
UNLEVELED

M10W-9
OUTPUT AMP Rev. E

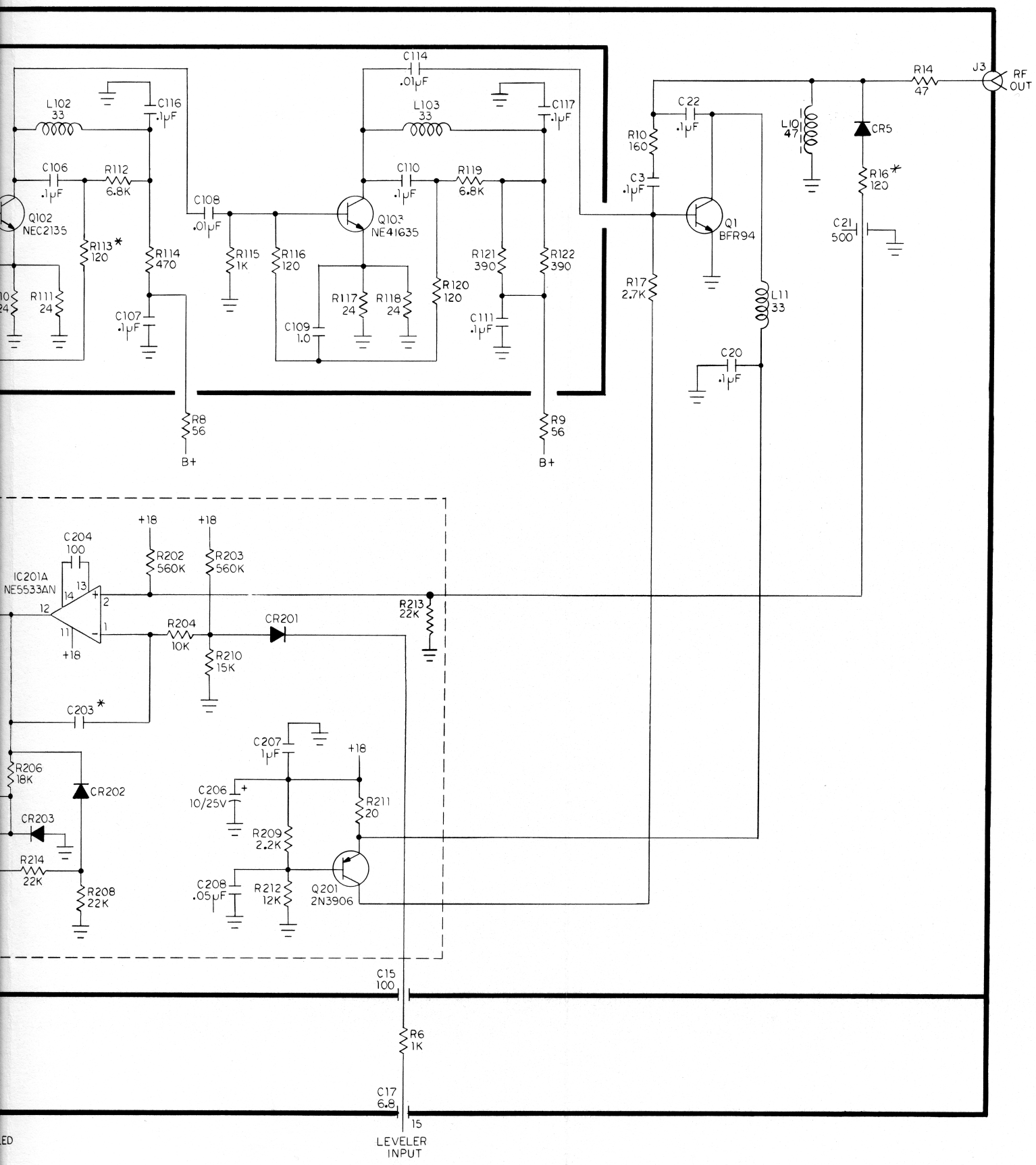

SECTION 8
MANUAL CHANGES & OPTIONS

8.1 INTRODUCTION

This section contains descriptions of engineering updates as well as corrections to any errors in the manual. Also in this section is the necessary information to document the options which have been ordered with the instrument.

8.2 MANUAL CHANGES

WAVETEK'S product improvement program incorporates the latest electronic developments into these instruments as rapidly as development and testing permit. Due to the time required to document and print these instruction manuals, it is not always possible to include the changes in the original printing. Change information, if any, appears at the end of this section.

8.3 OPTIONS

Refer to Section 1.3 for a list of the options available with this instrument. The option documentation includes the operation, theory of operation, maintenance, replaceable parts list and schematics.

OPTION 1A

RF LEVEL PROGRAMMING

INTRODUCTION

This factory-installed option requires a number of changes to the standard signal generator, and provides remote programming of the RF level, front-panel RF level control, and reverse-power protection.

Remote programming is accomplished via the rear-panel connector using 8-4-2-1 BCD contact closures or TTL signals to cover the range from 0 to 109.9 dB in 0.1 dB steps with +13 dBm as the 0 dB reference point.

Front-panel level control is continuously adjustable from +13 dBm to -97 dBm (110 dB range) in 10 dB steps plus 10 dB vernier.

Reverse-power protection is provided by this option to prevent damage to the instrument if DC (100 volts max) or RF (50 W max) voltages are inadvertently applied to the signal generator RF OUT connector.

NOTE

DC protection is not included on Model 3002.

Option 1A removes the standard step Attenuator and Meter Board from the signal generator, and adds a Programmable Step Attenuator, M41A-1 Attenuator Driver module, B005 Meter Board, and B004 Level Program Board.

Due to the slight "insertion loss" and change in flatness caused by addition of the Programmable Attenuator to the signal generator, it will not be possible to obtain +13 dBm output on all frequencies; therefore, the maximum calibrated output is +12 dBm when Option 1A is installed.

OPTION 1A

SPECIFICATIONS

PROTECTION CIRCUIT

FREQUENCY RANGE	1 to 520 MHz (.001 to 520 MHz on 3002)
INSERTION LOSS	<0.2 dB
TRIP TIME	<2 msec
RF TRIP VOLTAGE	4.5 to 5.5 volts (0.5 W)
MAX. RF	50 W
DC BLOCKING VOLTAGE	100 volts max (N/A on 3002)

RF LEVEL PROGRAMMING

POWER LEVEL	The max calibrated output is +12 dBm (.891 VRMS) when Option 1A is installed
RANGE, FRONT-PANEL	Continuously adjustable from +13 dBm to -97 dBm (110 dB range).
RANGE, REMOTE PROGRAMMING	Adjustable in 0.1 dB steps from +13 dBm to -96.9 dBm (109.9 dB range; 0 dB reference = +13 dBm).
ACCURACY (EACH 10 dB STEP)	10 dB $\pm$0.1 dB
SWITCHING SPEED	10 dB step: Typ. <3 msec Max. <6 msec
IMPEDANCE	50 ohm (SWR <1.3)
FLATNESS	$\pm$.75 dB

OPERATING INSTRUCTIONS

Front-Panel Operation

Front-panel operation remains basically the same as for a standard instrument, except the standard +13 dBm to -137 dBm range is changed to +13 dBm to -97 dBm.

NOTE

When front-panel operation is employed, any remote programming connected to the rear-panel LEVEL PROGRAM plug is automatically disabled.

Remote Programming

Set the front-panel Step Attenuator to the REMOTE position; then, connect remote-programming BCD switches or TTL signals to the signal generator rear-panel LEVEL PROGRAM plug as shown in Table 1. A mating plug is furnished with each instrument.

For example, to program an attenuation of 106.5 dB, pins 14, 7, 8, 10, and 12 of the LEVEL PROGRAM plug must be grounded, then to reduce the attenuation by 6 dB (i.e. 100.5 dB), ground is removed from pins 7 and 8. (Note that 0 dB reference point is +13 dBm.)

TABLE 1

DB ATTEN	R.P. PINS GROUNDED	DB ATTEN	R.P. PINS GROUNDED	DB ATTEN	R.P. PINS GROUNDED
0	None				
10	2	1	6	0.1	10
20	3	2	7	0.2	11
30	2 & 3	3	6 & 7	0.3	10 & 11
40	4	4	8	0.4	12
50	2 & 4	5	6 & 8	0.5	10 & 12
60	3 & 4	6	7 & 8	0.6	11 & 12
70	2,3, & 4	7	6, 7, & 8	0.7	10, 11, & 12
80	5	8	9	0.8	13
90	2 & 5	9	6 & 9	0.9	10 & 13
100	14				

PIN #	CONNECTION
1	Ground
2	1 10 dB
3	2 10 dB
4	4 10 dB
5	8 10 dB
6	1 1 dB
7	2 1 dB
8	4 1 dB
9	8 1 dB
10	1 0.1 dB
11	2 0.1 dB
12	4 0.1 dB
13	8 0.1 dB
14	1 100 dB
15	- -

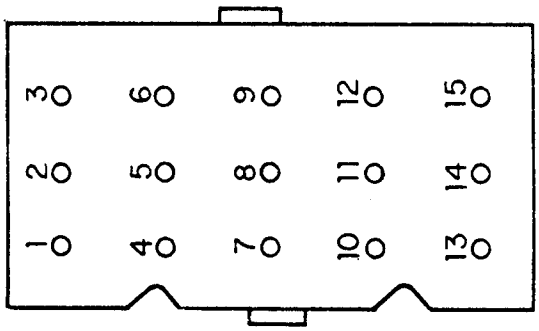

Level Program Plug

Reverse Power Protection Circuit

If an external RF voltage of approximately 6 VRMS or more is accidentally applied to the instrument's RF OUT connector, an internal switch in the Programmable Attenuator in series with the RF output will open. This prevents damage to the instrument's Attenuator or Output Amplifier. This open switch will be indicated by a flashing of the UNLEVELED lamp on the front panel. Once the switch is tripped, it will latch in the open position and remain open until reset. A combination of a bad mismatch, high output level (0.1 V) and changing frequency can also cause the Protection Circuit to trip.

After removing the RF signal causing the overlaod, the switch can be reset by momentarily turning the front-panel AC POWER switch off.

NOTE

Normal operation of the UNLEVELED lamp is a steady glow if instrument is unleveled. If the RF circuit breaker is tripped while the instrument is unleveled, the UNLEVELED lamp will vary in intensity instead of flashing on and off.

CIRCUIT DESCRIPTION

Figure 8/1A-1 is a block diagram of RF Level Programming Option 1A. Refer to this diagram and the appropriate schematics in Section 6 to follow the circuit information contained in this Section.

Reverse Power Protection Circuit

The Reverse Power Protection circuitry is located in the Programmable Attenautor and in Attenuator Drive module M41A-1. With the instrument's AC POWER switch turned off, the Protection Circuit internal relay, in series with the RF output, is in its normally open position. This prevents damage to the Attenuator or Output Amplifier if reverse power is inadvertently applied to the RF OUT connector while instrument is not in use. As soon as AC power is applied to instrument, the comparator, IC1, will compare the RF monitor voltage to a fixed reference voltage of approximately 5 volts. As long as the monitor voltage is less than the 5 volt reference, the comparator output will be approximately +17 volts. This positive output turns on relay driver Q1, which energizes the Protection Circuit relay, thus completing the RF output circuit.

The positive output from IC1 also turns on Q2; thus effectively grounding pin 7 of timer IC5, which operates as an astable oscillator. With pin 7 grounded, the timer is inoperative and its output at pin 3 is "high". The "high" output from IC5 turns off Q3 and thus prevents the current flow to the front-panel UNLEVELED lamp.

If an external RF signal exceeding 6 VRMS is applied to the instrument's RF OUT connector, the RF monitor voltage will go above 5 volts. This will produce a negative output from IC1, and the feedback provided by the negative latch diode and resistor will latch IC1 in this state. The negative output from IC1 will turn off relay driver Q1 and cause the Protection Circuit relay to return to its normally open position, thereby removing the external RF signal from the attenuator circuitry.

The negative output from comparator IC1 also turns off Q2, thus removing the ground from pin 7 of timer IC5, which allows the timer to oscillate. The output at pin 3 of IC5 them varies between 0 and +7 volts. As the output swings down toward 0, Q3 turns on and supplies current to the front-panel UNLEVELED lamp; then, as the output rises toward +7 volts, Q3 turns off and prevents current flow. This on/off cycle of Q3 causes the UNLEVELED lamp to flash.

The comparator cam be unlatched by momentarily removing AC power to the instrument after the external RF signal is removed.

Front-Panel RF Level Control

When Option 1A is installed, the RF output level is adjustable over a range of 110 dB (+13 dBm to -97 dBm) as follows: The output can be reduced 10 dB by level program relay K2 on Meter Board B005. The Programmable Attenuator provides another 90 dB of attenuation in 10 dB steps, and the OUTPUT VERNIER provides continuous adjustment of the output level over a 10 dB range. These combine to provide a total attenuation of 110 dB.

As shown in the block diagram, front-panel RF level control involves the Meter Board, Attenuator Drive module M41A-1, and the Programmable Attenuator. With the front-panel BCD switch (Attenuator dial) in any position except REMOTE, Meter Board relay K1 will be energized; thus the OUTPUT VERNIER will be connected to the +10 dBm/0 dBm level circuitry.

NOTE

For clarity, quad 2-input "or" gate, IC4, is shown in the block diagram as a SPDT relay. With BCD switch in any position except REMOTE, this circuit is de-energized, therefore, the 80-40-20-10 BCD switch output is applied directly to Attenuator Drive module M41A-1.

Assume the front-panel Attenuator dial is set for an output of -70 dBm (80 dB total attenuation). The BCD switch grounds the "80" wire, which applies ground to pin 13 of ROM IC3 in the M41A-1. The "10", "20", and "40" inputs to the ROM remain "high". This turns on the appropriate FET switches to activate the 10 dB, 20 dB, and 40 dB pads in the Programmable Attenuator. A "high" on ROM pin 3 de-energizes Meter Board relay K2, thus selecting 0 dBm program voltage for the Output Amplifier. Therefore, 0 dBm output from the Output Amplifier attenuated 70 dB by the Programmable Attenuator results in an output of -70 dBm, as selected by the front-panel Attenuator dial.

NOTE

+10 dBm output is equivalent to the "0" BCD switch position, 0 dBm corresponds to the "10" BCD position, and -10 dBm is the "20" BCD position, etc. The BCD number indicates the total attenuation in the unit, including the +10 dB/0 dB position of relay K2 and the Programmable Attenuator active pads.

Remote RF Level Programming

In addition to the Meter Board, Attenuator Drive module, and Programmable Attenuator, remote level programming also requires a Level Program Board and rear-panel plug as shown in the block diagram.

With front-panel BCD switch (Attenuator dial) set to the REMOTE position, IC4 is energized and the Attenuator Drive module input is switched from the front-panel BCD switch to the 80-40-20-10 BCD input from the rear-panel Level Program plug. In the Attenuator dial REMOTE position, Meter Board relay K1 is de-energized, thereby disabling the OUTPUT VERNIER and replacing it with "combined modulation/level program output" voltage from the Level Program Board.

Basically, the rear-panel 80-40-20-10 BCD input determines whether Meter Board relay K2 selects +10 dBm or 0 dBm program voltage, and also which Programmable Attenuator pads (if any) are activated.

The negative voltage applied across the OUTPUT VERNIER control is also applied to a voltage divider network in the "1 dB Program Select" circuit. The 8-4-2-1 BCD input from the rear-panel plug activates FET switches to select voltage points on the divider network corresponding to the 1 dB steps. These voltage points are, in turn, connected across

another voltage divider in the "0.1 dB Program Select" circuit. Then, rear-panel .8-.4-.2-.1 BCD input activates more FET switches to select voltage points on this divider which correspond to 0.1 dB steps. The output of the FET switches is connected through Meter Board relay K1 to the +10 dBm/0 dBm level circuitry.

If amplitude modulation input is applied to Meter Board, the modulation signal will be superimposed on the DC signal applied to voltage divider in the "1 dB Program Select" circuit, and thence on to the "0.1 dB Program Select" circuit. The combined modulation/level program output voltage is applied to Output Amplifier through the +10 dBm/0 dBm level circuitry.

MAINTENANCE

No calibration or maintenance should be required for this option, other than that described in previous sections of this manual for calibration of the Meter Board. However, if a malfunction of some kind should make it necessary to repair the boards, they can be safely probed with a high impedance probe such as a scope or DVM. A logical trouble-shooting procedure of isolating the fault should be followed. The integrated circuits, which are most vulnerable to accidental shorts, are all in sockets for easy replacements.

SCHEMATICS AND PARTS LISTS

This section contains the wiring diagram, schematics, and parts lists for Option 1A.

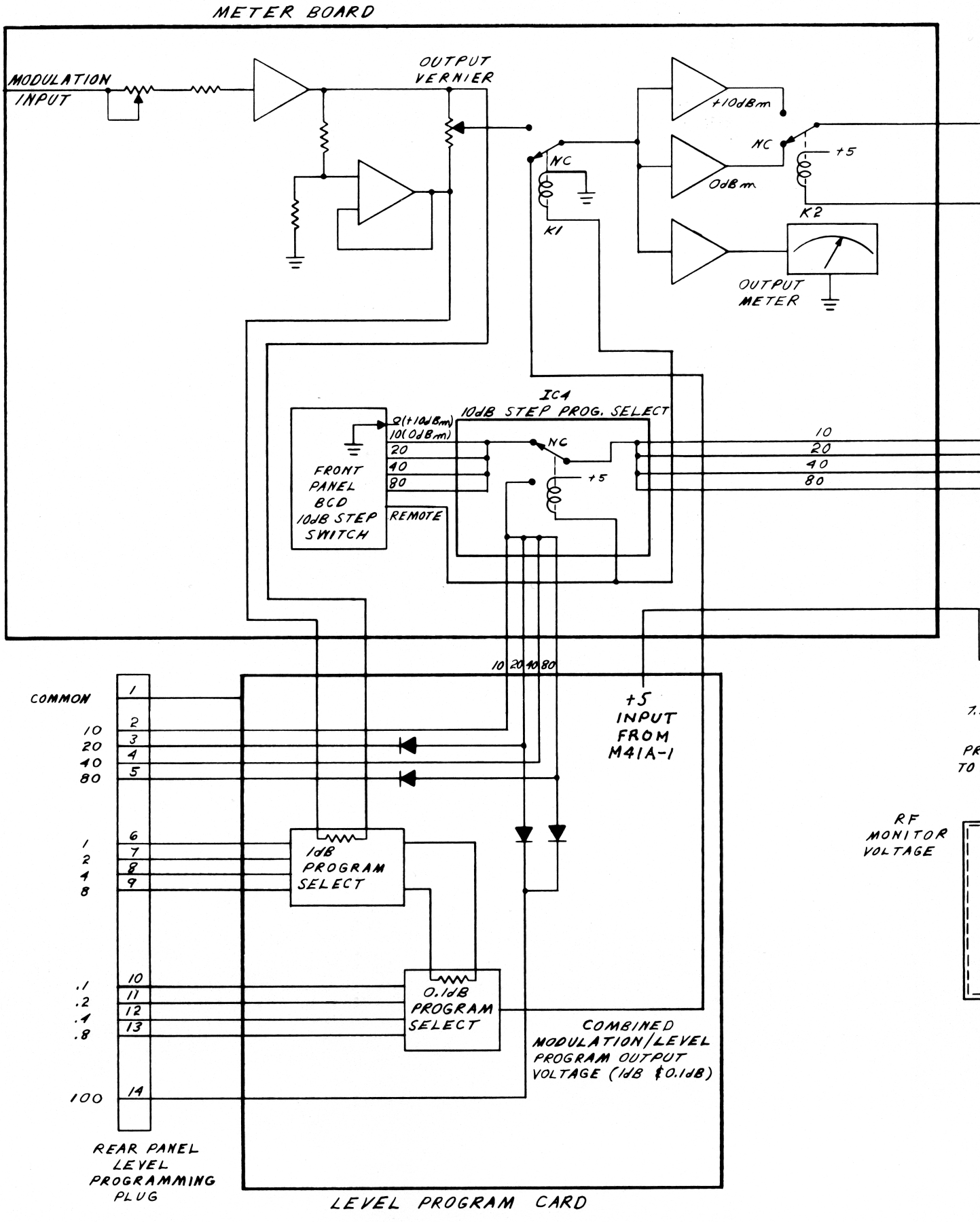
METER BOARD
MODULATION INPUT
OUTPUT VERNIER
+10dBm
0dBm
NC
+5
K2
NC
K1
OUTPUT METER
IC4
10dB STEP PROG. SELECT
2(+10dBm)
1(0dBm)
20
40
80
REMOTE
FRONT PANEL BCD 10dB STEP SWITCH
NC
+5
10
20
40
80
10 20 40 80
COMMON
1
10
20
40
80
+5 INPUT FROM M41A-1
RF MONITOR VOLTAGE
1
2
4
8
1dB PROGRAM SELECT
.1
.2
.4
.8
0.1dB PROGRAM SELECT
100
COMBINED MODULATION/LEVEL PROGRAM OUTPUT VOLTAGE (1dB ¢0.1dB)
REAR PANEL LEVEL PROGRAMMING PLUG
LEVEL PROGRAM CARD

3001 OPTION 1A BLOCK DIAGRAM

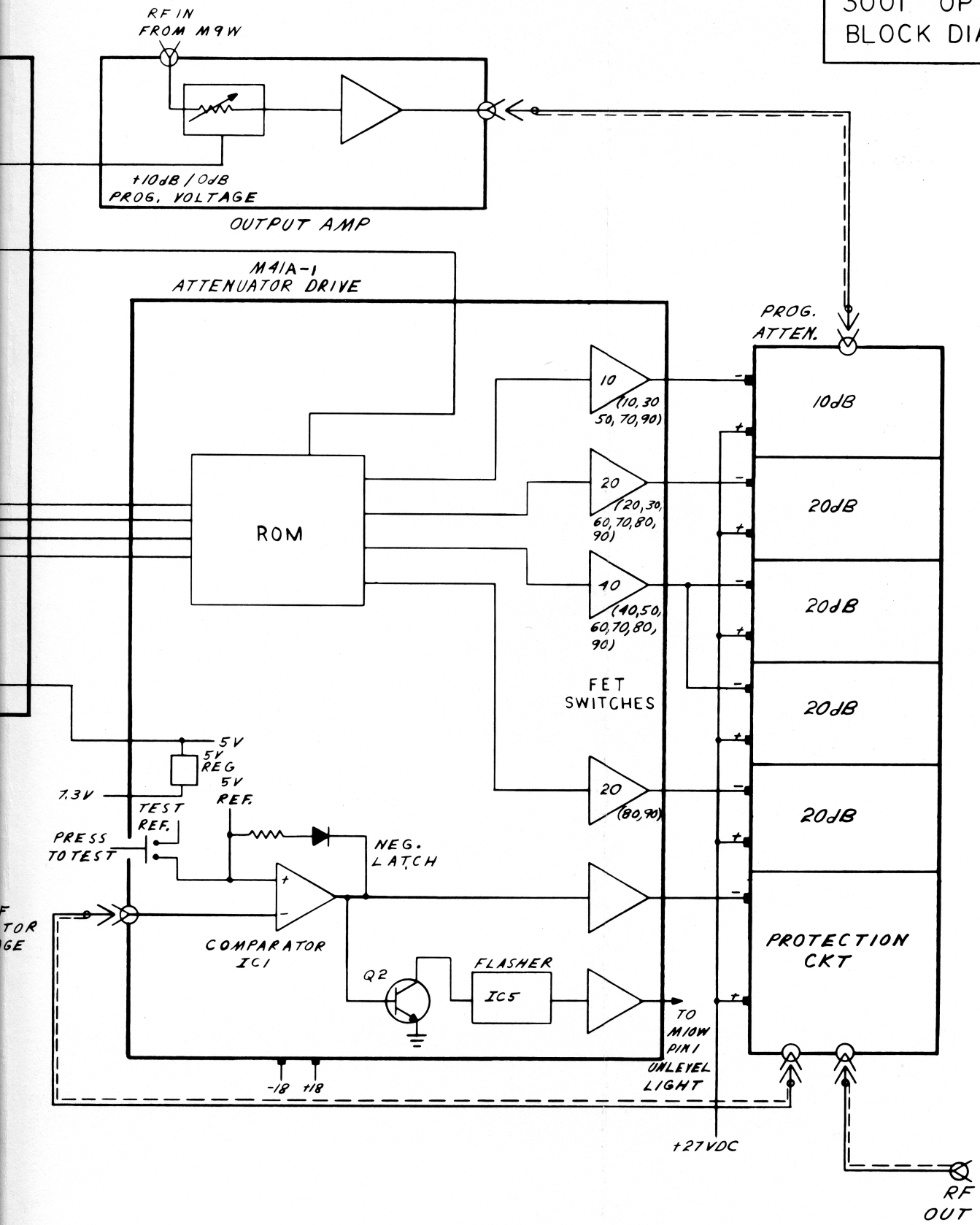

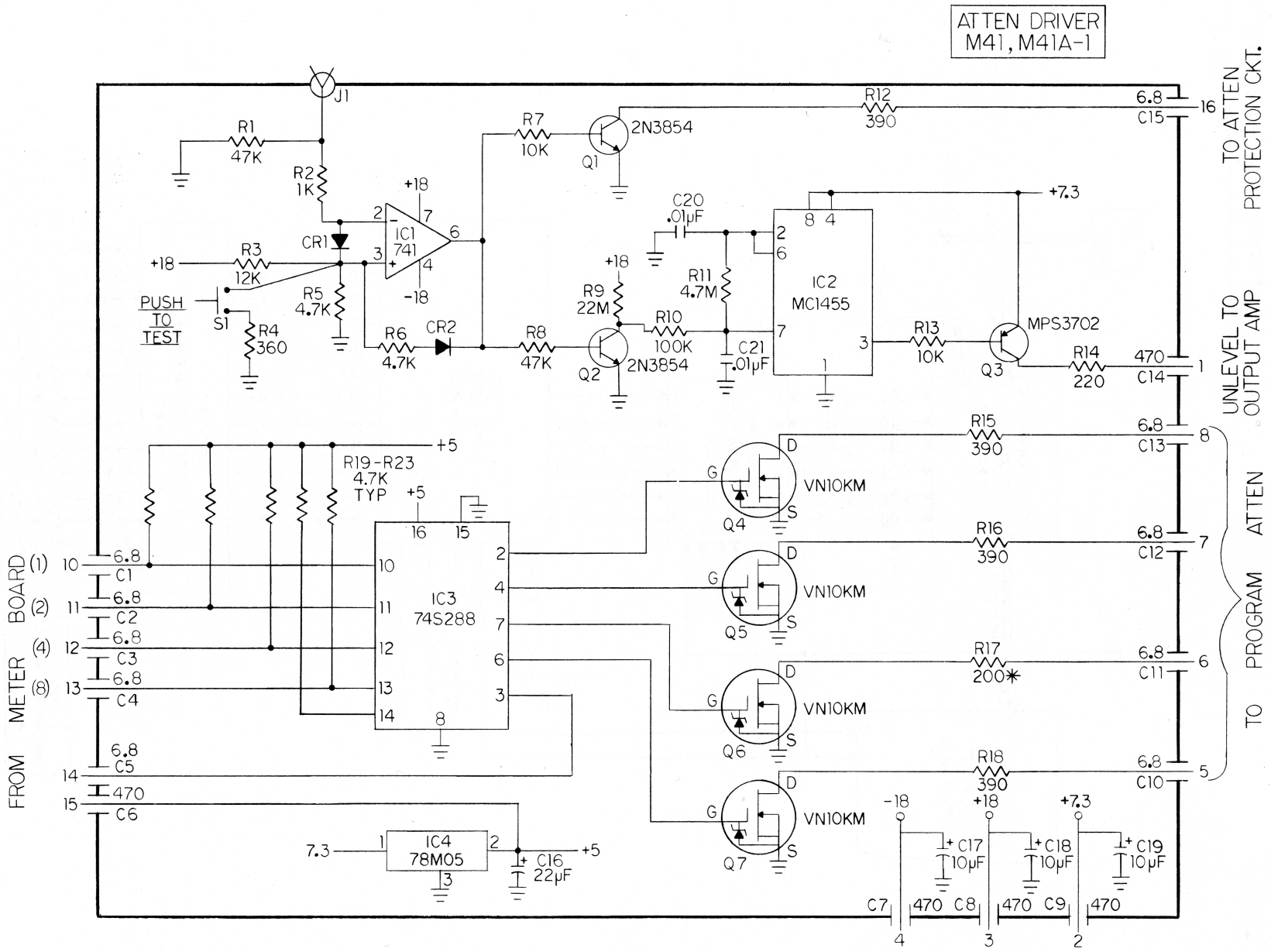
ATTEN DRIVER
M41, M41A-1
J1
R1
47K
R2
1K
CR1
IC1
741
+18
-18
R3
12K
PUSH
TO
TEST
S1
R4
360
R5
4.7K
R6
4.7K
CR2
R7
10K
2N3854
Q1
R8
47K
R9
22M
R10
100K
2N3854
Q2
C20
.01μF
R11
4.7M
C21
.01μF
IC2
MC1455
+7.3
R12
390
R13
10K
MPS3702
Q3
R14
220
6.8
C15
470
C14
TO ATTEN
PROTECTION CKT.
UNLEVEL TO
OUTPUT AMP
R19-R23
4.7K
TYP
+5
IC3
74S288
FROM METER BOARD
(1)
(2)
(4)
(8)
C1
C2
C3
C4
C5
C6
6.8
470
VN10KM
Q4
Q5
Q6
Q7
R15
390
R16
390
R17
200*
R18
390
C13
C12
C11
C10
TO PROGRAM ATTEN
IC4
78M05
7.3
C16
22μF
-18
C17
10μF
C18
10μF
C19
10μF
C7
470
C8
470
C9
470

OPTION 1A
WIRING MODIFICATIONS

REV. A

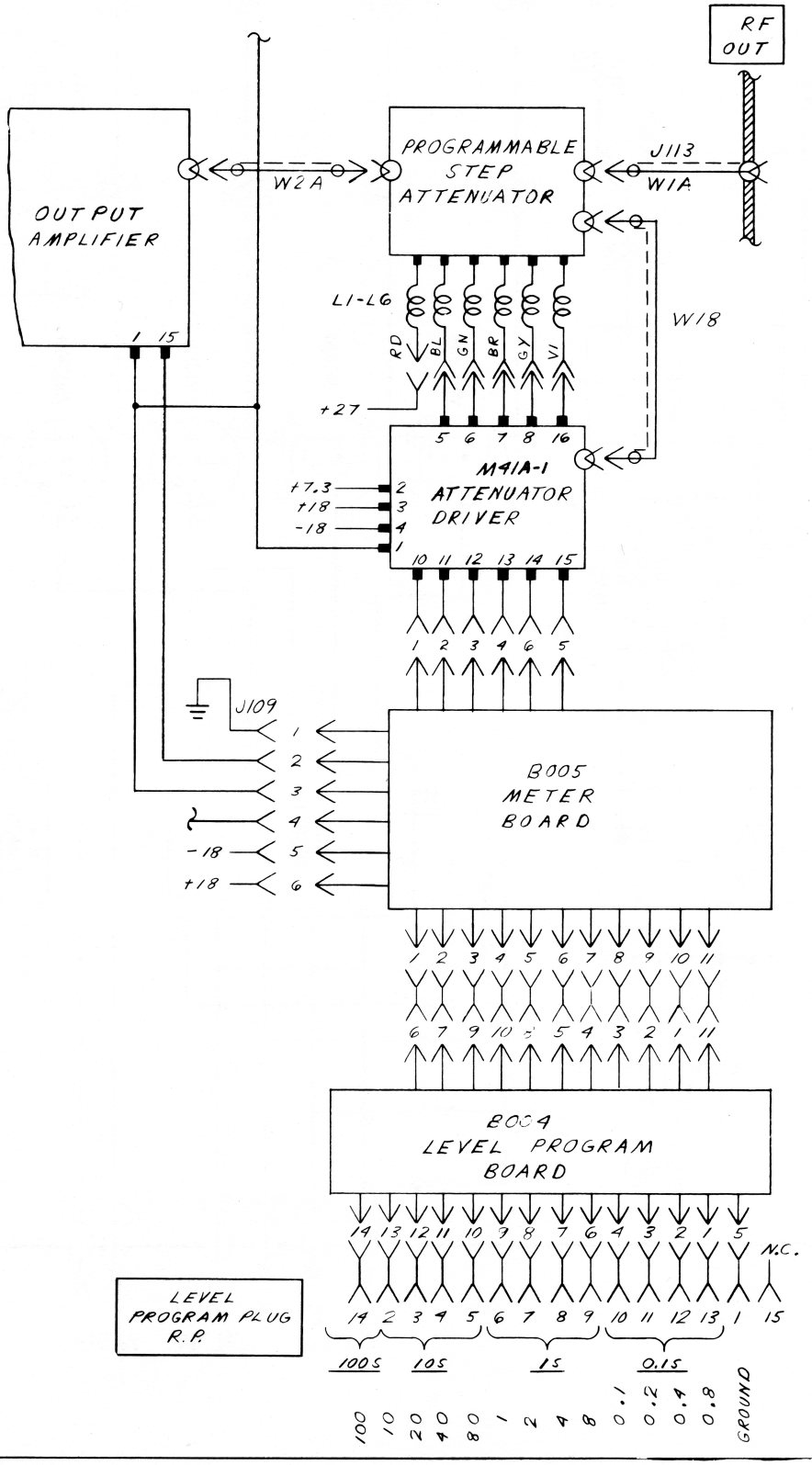

REFERENCE DESIGNATORS	PART DESCRIPTION	ORIG-MFGR-PART-NO	MFGR	WAVETEK NO.	QTY
R22	RES,MF,1/8W,1%,154 RF211-154	MF55K-154	ASE	4701-03-1540	1
R23	RES,MF,1/8W,1%,33.2	MF55K-33.2	ASE	4701-03-3329	1
R44 R45	RES,C,1/4W,5%,100 RC103-110	CF1/4-100	ASE	4700-15-1000	2
R56	RES,VAR,500	89PR500	BEK	4610-00-2501	1

WAVETEK PARTS LIST	TITLE	ASSEMBLY NO.	REV
	LEV PROG BD ASSY B004	1110-00-0731 PAGE: 3	A

REFERENCE DESIGNATORS	PART DESCRIPTION	ORIG-MFGR-PART-NO	MFGR	WAVETEK NO.	QTY
C1	CAP,TANT,.47MF,50V CE113-447	935	TRW	1510-21-9470	1
CR1	LED DL000-001	NSL5046	NAT	4810-02-0001	1
CR2 CR3	DIODE DR000-001	1N4004	P-C	4806-01-4004	2
CR10 CR11 CR4 CR5 CR6 CR7 CR8 CR9	DIODE DG109-140	1N4148	FCD	4807-01-0914	8
IC1 IC2 IC3	IC,IC000-005	RC4558DN	RAY	7000-14-5800	3
IC4	IC,ID004-001	SM7432A	T-I	8000-74-3200	1
K1 K2	RELAY,SPDT MR000-002	191TE1C1-12G	SGM	4510-00-0002	2
M1	METER, 3 SCALE MI000-004	MI000-004	W-I	2410-06-0001	1
P1 P2	PLUG,6-PIN KONEKTON MC000-075	09-65-1061	MOL	2112-05-0002	2
P3	PLUG,LOCKING	09-65-1121	MOL	2112-05-0004	1
Q1 Q2 Q3	TRANS QA038-541	2N3854A	G-E	4901-03-8541	3
R1 R25	POT,2K,RP130-220	89PR2K	BEK	4610-00-2202	2
R2	RES,C,1/4W,5%,9.1K RC103-291	CF1/4-9.1K	ASE	4700-15-9101	1
R3	RES,MF,1/8W,1%,36.5K RF213-365	MF55K-36.5K	ASE	4701-03-3652	1

WAVETEK PARTS LIST	TITLE	ASSEMBLY NO.	REV
	METER BD ASSY,B005	1110-00-0720 PAGE: 1	A

REFERENCE DESIGNATORS	PART DESCRIPTION	ORIG-MFGR-PART-NO	MFGR	WAVETEK NO.	QTY
R14 R4	RES,C,1/4W,5%,33K RC103-333	CF1/4-33K	ASE	4700-15-3302	2
R26 R31 R5	RES,C,1/4W,5%,20K RC103-320	CF1/4-20K	ASE	4700-15-2002	3
R6	RES,MF,1/8W,1%,2.74K RF212-274	MF55K-2.74K	ASE	4701-03-2741	1
R20 R21 R32 R7 R8	RES,C,1/4W,10%,10K RC104-310AB	CB1031	A-B	4705-16-1002	5
R9	RES,MF,1/8W,1%,11.3K RF213-113	MF55K-11.3K	ASE	4701-03-1132	1
R10	RES,MF,1/8W,1%,3.92K RF212-392	MF55K-3.92K	ASE	4701-03-3921	1
R11	POT,MOD,10K,10% RP140-310	70AIN048P103U	A-B	4610-11-3103	1
R12 R13 R17 R19 R29	POT,20K,RP130-320	89PR20K	BEK	4610-00-2203	5
R15 R34	RES,C,1/4W,5%,5.6K RC103-256	CF1/4-5.6K	ASE	4700-15-5601	2
R16	RES,C,1/4W,5%,220K RC103-422	CF1/4220K	ASE	4700-15-2203	1
R18	RES,C,1/4W,5%,1M RC103-510	CF1/4-1M	ASE	4700-15-1004	1
R22	RES,C,1/4W,5%,18K RC103-318	CF1/4-18K	ASE	4700-15-1802	1

REFERENCE DESIGNATORS	PART DESCRIPTION	ORIG-MFGR-PART-NO	MFGR	WAVETEK NO.	QTY
R23 R33	RES,C,1/4W,5%,270 RC103-127	CF1/4-270	ASE	4700-15-2700	2
R24	RES,MF,1/8W,1%,15.8K RF213-158	MF55K-15.8K	ASE	4701-03-1582	1
R27	RES,C,1/4W,5%,68K RC103-368	CF1/4-68K	ASE	4700-15-6802	1
R28	RES,C,1/4W,5%,100K RC103-410	CF1/4-100K	ASE	4700-15-1003	1
R30	RES,C,1/4W,5%,15K RC103-315	CF1/4-15K	ASE	4700-15-1502	1
S1	SWITCH ASSY, ROTARY SR000-028	SR000-028	W-I	5104-00-0017	1

REFERENCE DESIGNATORS	PART DESCRIPTION	ORIG-MFGR-PART-NO	MFGR	WAVETEK NO.	QTY
C01 C02 C03 C04 C05 C10 C11 C12 C13 C16	CAP, F.T., 6.8PF CF102-R68	FA5C-6892	A-B	1510-30-1689	10
C06	CAP, TANT, 22MF, 10V	T322C226K010AS	KEM	1510-22-2220	1
C07 C08 C09 C14 C15	CAP, F.T., 470PF CF101-147	FA5C-4712	A-B	1510-30-0471	5
C17 C18 C19	CAP, TANT, 10MF, 25V CE120-010	162D106X0025DD2	SPR	1510-21-7100	3
C20 C21	CAP, CER, .01MF, 100V CD103-310	68U103M	MDC	1510-10-2103	2
CR01 CR02	DIODE DG109-140	1N4148	FCD	4807-01-0914	2
IC01	IC, IC000-002	N5741CV	SIG	7000-57-4100	1
IC02	IC IC000-006	MC1455P1	MOT	7000-14-5500	1
IC03	PROM, PER M41A-1 FROM: 8007-42-8800	8410-00-0008	W-I	8410-00-0008	1
IC04	IC, IC000-011	78M05UC	FCD	7000-78-0500	1
Q01 Q02	TRANS QA038-541	2N3854A	G-E	4901-03-8541	2
Q03	TRANS QB000-009	MPS3702	MOT	4902-03-7020	1
Q04 Q05 Q06 Q07	POWER FET	VN10KM	SCX	4902-00-0100	4
R01 R08	RES, C, 1/4W, 5%, 47K RC103-347	CF1/4-47K	ASE	4700-15-4702	2

WAVETEK PARTS LIST	TITLE	ASSEMBLY NO.	REV
	ATTEN DRVR,M41A-1	1114-00-0323	
		PAGE: 1	

REFERENCE DESIGNATORS	PART DESCRIPTION	ORIG-MFGR-PART-NO	MFGR	WAVETEK NO.	QTY
R02	RES, C, 1/4W, 5%, 1K RC103-210	CF1/4-1K	ASE	4700-15-1001	1
R03	RES, C, 1/4W, 5%, 12K RC103-312	CF1/4-12K	ASE	4700-15-1202	1
R04	RES, C, 1/4W, 5%, 360 RC103-136	CF1/4-360	ASE	4700-15-3600	1
R05 R06 R19 R20 R21 R22 R23	RES, C, 1/4W, 5%, 4.7K RC103-247	CF1/4-4.7K	ASE	4700-15-4701	7
R07 R13	RES, C, 1/4W, 5%, 10K RC103-310	CF1/4-10K	ASE	4700-15-1002	2
R09	RES, C, 1/4W, 10%, 22M RC104-622	CB2261	A-B	4700-16-2205	1
R10	RES, C, 1/4W, 5%, 100K RC103-410	CF1/4-100K	ASE	4700-15-1003	1
R11	RES, C, 1/4W, 5%, 4.7M RC103-547	CB4755	A-B	4700-15-4704	1
R12 R15 R16 R18	RES, C, 1/4W, 5%, 390 RC103-139	CF1/4-390	ASE	4700-15-3900	4
R14	RES, C, 1/4W, 5%, 220 RC103-122	CF1/4-220	ASE	4700-15-2200	1
R17	RES, C, 1/4W, 5%, 200 RC103-120	CF1/4-200	ASE	4700-15-2000	1

WAVETEK PARTS LIST	TITLE	ASSEMBLY NO.	REV
	ATTEN DRVR,M41A-1	1114-00-0323	
		PAGE: 2	

REFERENCE DESIGNATORS	PART DESCRIPTION	ORIG-MFGR-PART-NO	MFGR	WAVETEK NO.	QTY
C1 C10 C11 C12 C13 C14 C15 C16 C17 C18 C19 C2 C20 C21 C22 C23 C24 C25 C26 C27 C28 C29 C3 C30 C4 C5 C6 C7 C8 C9	CAP,CER,6.8PF,1KV CD101-R68	60C0H6R8D	MDC	1510-10-0689	30
CR1 CR2 CR3 CR4	DIODE DG000-009	5082-2835	H-P	4809-02-0002	4
IC1 IC3	IC,IC000-023	SN7405N	T-I	8000-74-0500	2
IC2 IC4	IC,IC000-028	93L01PC	FCD	7000-93-0110	2
IC10 IC11 IC12 IC13 IC14 IC15 IC5 IC6 IC7 IC8 IC9	IC,IC000-005	RC4558DN	RAY	7000-14-5800	11
NONE	PLUG,R.A.,MC000-133	09-75-1141	MOL	2112-06-0003	1
NONE	PLUG,R.A.,MC000-132	09-75-1111	MOL	2112-06-0004	1
Q1 Q10 Q11 Q12 Q13 Q14 Q15 Q16 Q17 Q18 Q19 Q2 Q20 Q21 Q22 Q23 Q24 Q25 Q26 Q27 Q28 Q29 Q3 Q30 Q4 Q5 Q6 Q7 Q8 Q9	TRANS QA054-610	2N5461	MOT	4901-05-4610	30
R1	RES,C,1/4W,5%,3.3K RC103-233	CF1/4-3.3K	ASE	4700-15-3301	1
R2	RES,C,1/4W,5%,1.5K RC103-215	CF1/4-1.5K	ASE	4700-15-1501	1

WAVETEK PARTS LIST	TITLE	ASSEMBLY NO.	REV
	LEV PROG BD ASSY B004	1110-00-0731 PAGE: 1	A

REFERENCE DESIGNATORS	PART DESCRIPTION	ORIG-MFGR-PART-NO	MFGR	WAVETEK NO.	QTY
R10 R11 R12 R24 R25 R26 R27 R28 R29 R3 R30 R31 R32 R33 R34 R35 R36 R37 R38 R39 R4 R40 R41 R42 R43 R5 R6 R7 R8 R9	RES,C,1/4W,10%,10M RC104-610	CB1061	A-B	4700-16-1005	30
R13	RES,MF,1/8W,1%,432 RF211-432	MF55K-432	ASE	4701-03-4320	1
R14	RES,MF,1/8W,1%,392 RF211-392	MF55K-392	ASE	4701-03-3920	1
R15	RES,MF,1/8W,1%,340 RF211-340	MF55K-340	ASE	4701-03-3400	1
R16	RES,MF,1/8W,1%,309 RF211-309	MF55K-309	ASE	4701-03-3090	1
R17 R46 R47 R48 R49 R50 R51 R52 R53 R54 R55	RES,MF,1/8W,1%,280 RF211-280	MF55K-280	ASE	4701-03-2800	11
R18	RES,MF,1/8W,1%,243 RF211-243	MF55K-243	ASE	4701-03-2430	1
R19	RES,MF,1/8W,1%,215 RF211-215	MF55K-215	ASE	4701-03-2150	1
R20	RES,MF,1/8W,1%,196 RF211-196	MF55K-196	ASE	4701-03-1960	1
R21	RES,MF,1/8W,1%,174 RF211-174	MF55K-174	ASE	4701-03-1740	1

WAVETEK PARTS LIST	TITLE	ASSEMBLY NO.	REV
	LEV PROG BD ASSY B004	1110-00-0731 PAGE: 2	A

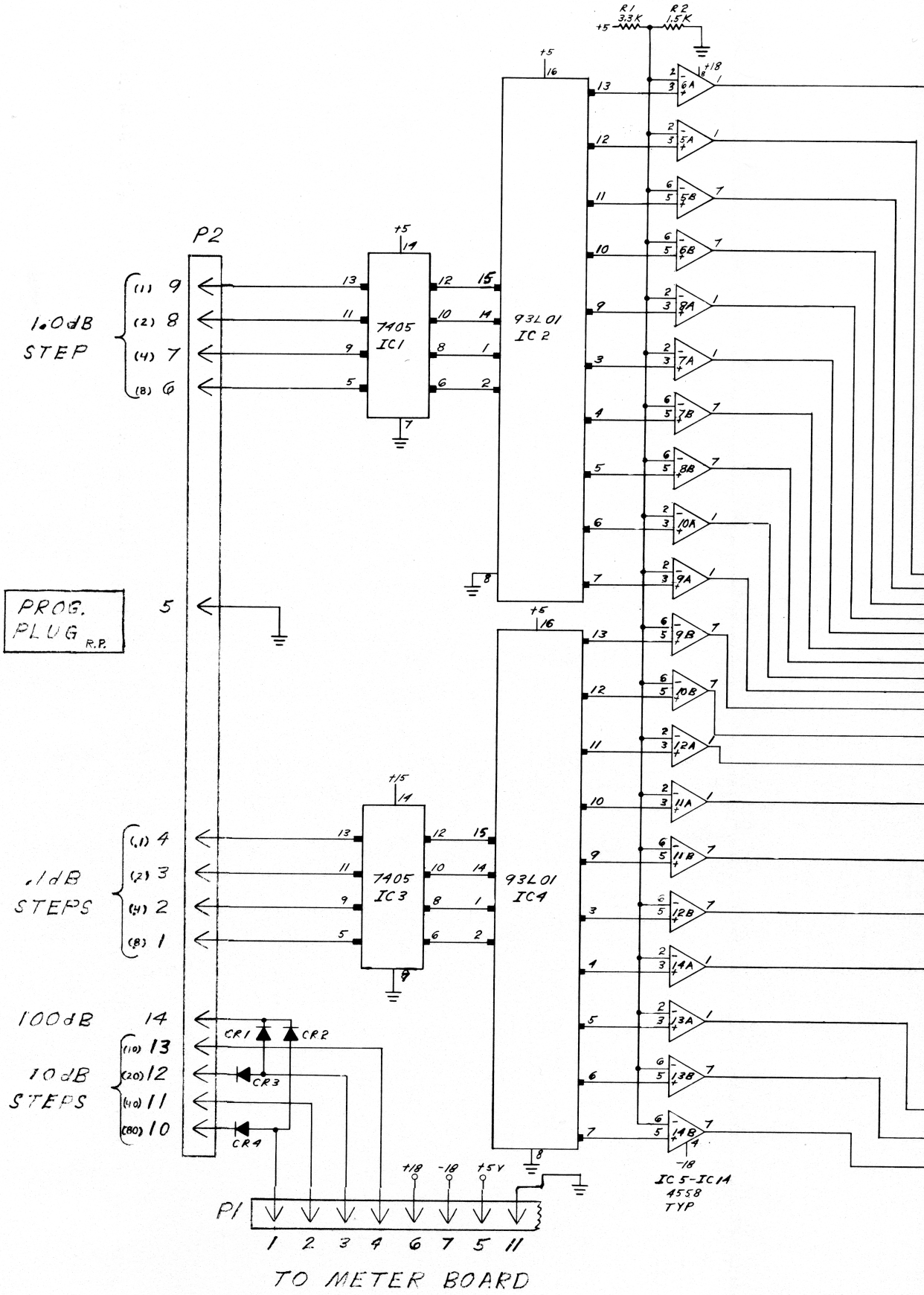
R1 3.3K
R2 1.5K
+5
P2
1.0dB STEP
(1) 9
(2) 8
(4) 7
(8) 6
7405 IC1
93L01 IC2
PROG. PLUG R.P.
5
.1dB STEPS
(1) 4
(2) 3
(4) 2
(8) 1
7405 IC3
93L01 IC4
100dB 14
10dB STEPS
(10) 13
(20) 12
(40) 11
(80) 10
CR1
CR2
CR3
CR4
+18
-18
+5V
P1
1 2 3 4 6 7 5 11
TO METER BOARD
IC 5-IC 14 4558 TYP

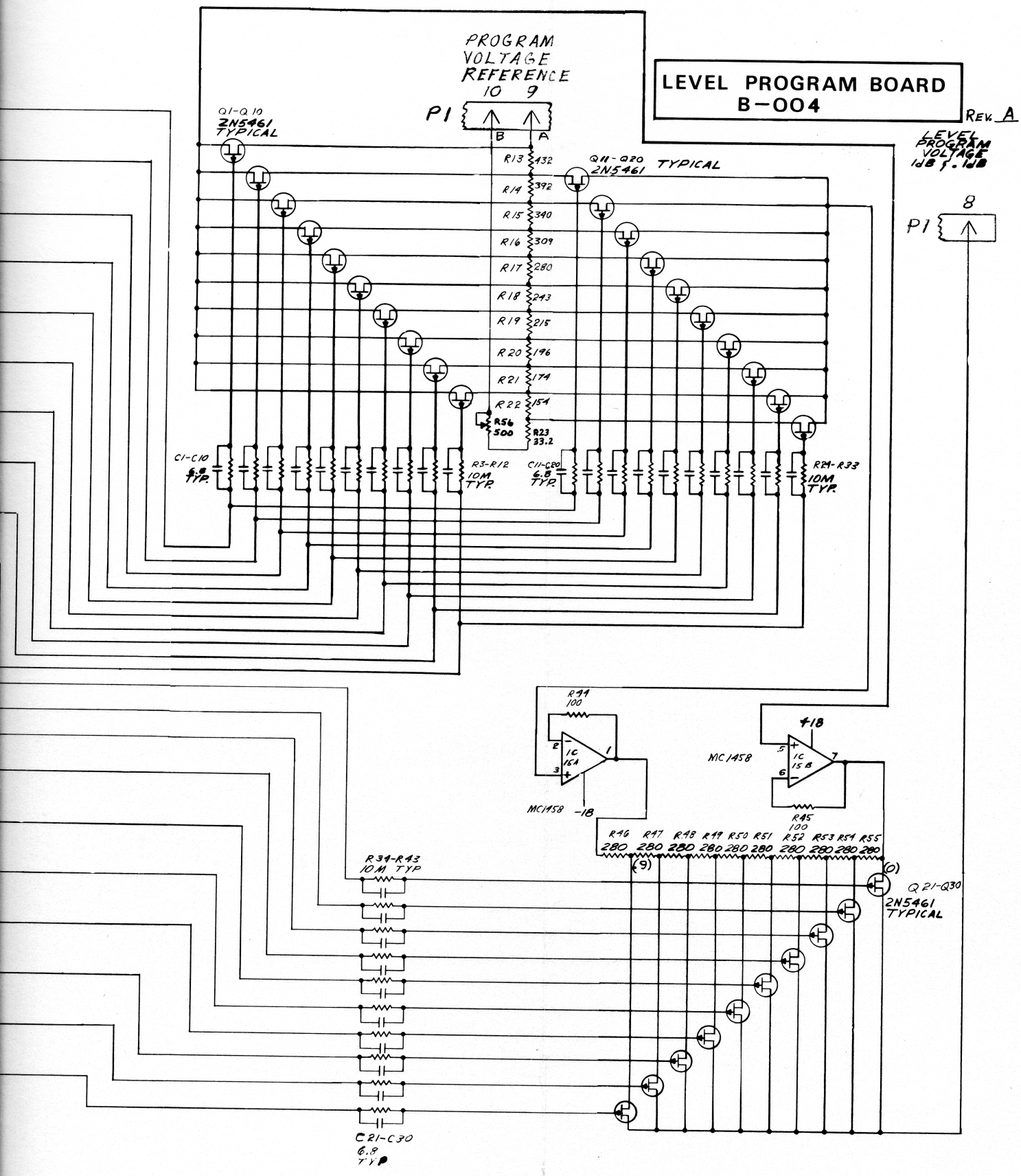
LEVEL PROGRAM BOARD
B-004
REV. A
PROGRAM VOLTAGE REFERENCE
10 9
P1
B A
Q1-Q10
2N5461
TYPICAL
Q11-Q20
2N5461 TYPICAL
LEVEL PROGRAM VOLTAGE 1dB f. 1dB
8
P1
R13 432
R14 392
R15 340
R16 309
R17 280
R18 243
R19 215
R20 196
R21 174
R22 154
R56 500
R23 33.2
C1-C10 6.8 TYP.
R3-R12 10M TYP.
C11-C20 6.8 TYP.
R24-R33 10M TYP.
R44 100
IC 15A
MC1458
-18
+18
MC1458
IC 15B
R45 100
R46 280
R47 280
R48 280
R49 280
R50 280
R51 280
R52 280
R53 280
R54 280
R55 280
(9)
(0)
Q21-Q30
2N5461
TYPICAL
R34-R43 10M TYP
C21-C30 6.8 TYP

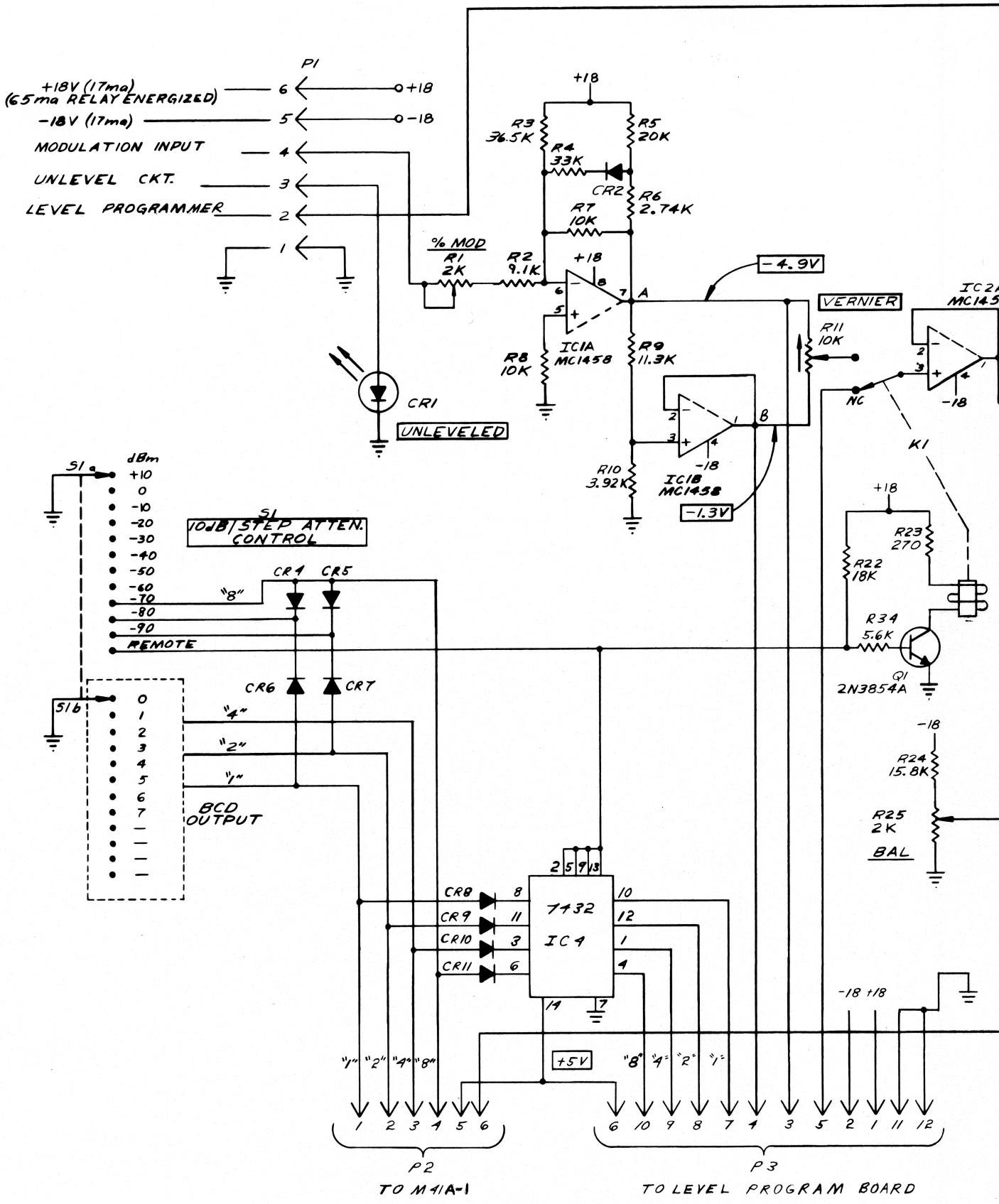
P1
+18V (17ma)
(65ma RELAY ENERGIZED)
-18V (17ma)
MODULATION INPUT
UNLEVEL CKT.
LEVEL PROGRAMMER
+18
-18
% MOD
R1 2K
R2 9.1K
R3 36.5K
R4 33K
R5 20K
R6 2.74K
R7 10K
CR2
R8 10K
R9 11.3K
R10 3.92K
R11 10K
IC1A MC1458
IC1B MC1458
IC2A MC145
-4.9V
-1.3V
VERNIER
NC
K1
CR1
UNLEVELED
S1a
dBm
+10
0
-10
-20
-30
-40
-50
-60
-70
-80
-90
REMOTE
S1
10dB STEP ATTEN. CONTROL
CR4
CR5
"8"
CR6
CR7
"4"
"2"
"1"
S1b
0
1
2
3
4
5
6
7
BCD OUTPUT
R23 270
R22 18K
R34 5.6K
Q1 2N3854A
R24 15.8K
R25 2K
BAL
CR8
CR9
CR10
CR11
7432
IC4
+5V
-18 +18
P2
TO M41A-1
P3
TO LEVEL PROGRAM BOARD

METER BOARD
RF LEVEL PROGRAMING OPT.
B 005

REV. __

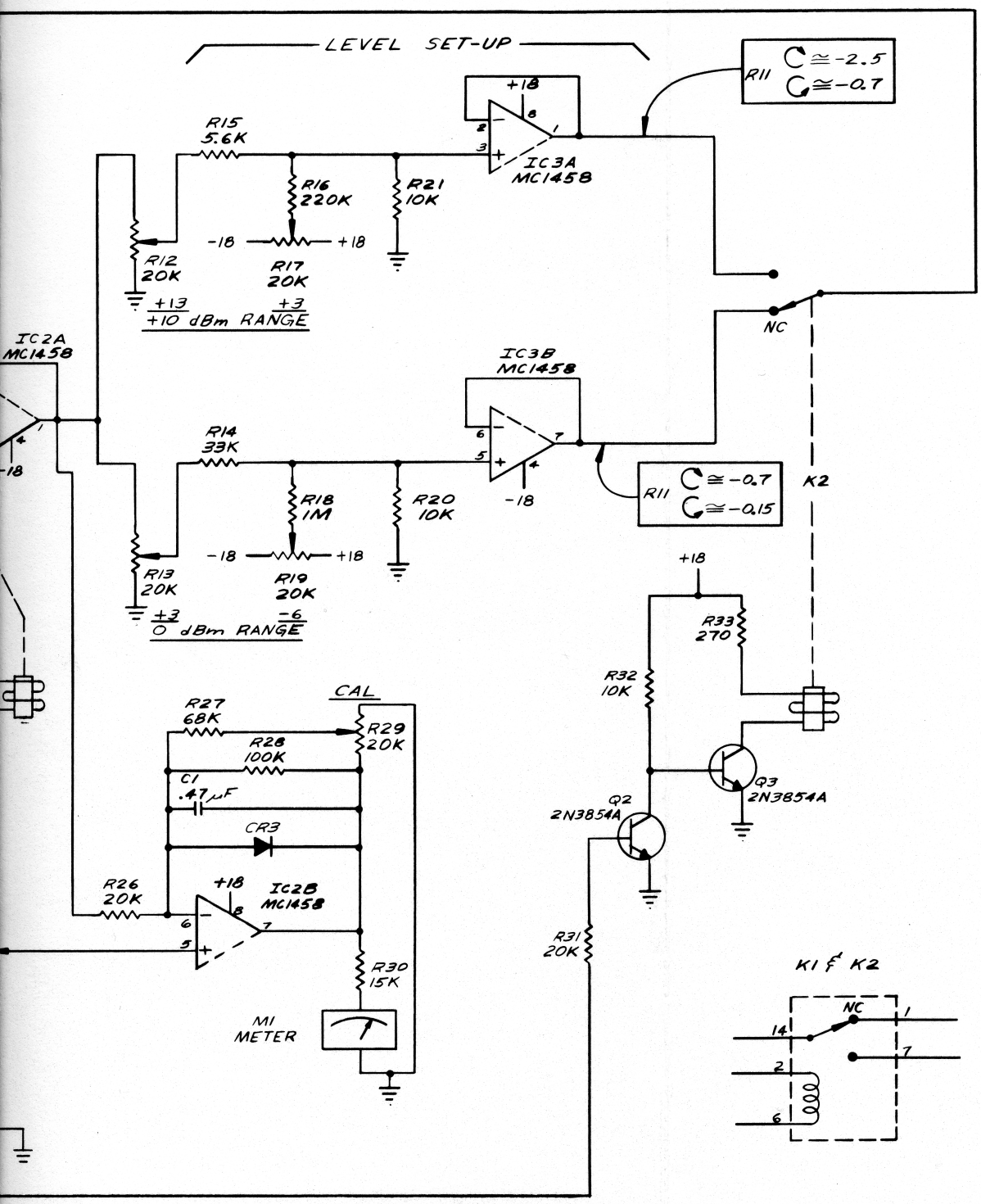

GENERAL INFORMATION

This factory-installed option requires the addition of a Programmable Attenuator and M42 Attenuator Drive module to the standard signal generator, and provides remote programming of the RF level via the rear-panel input connector using 8-4-2-1 BCD contact closures or TTL signals. The level programming range covers 0 to 90 dB in 10 dB steps. The 0 dB reference point is set to the desired level by the instrument front-panel attenuators. Remote selection of CW or AM mode is also provided by a switch-contact closure or a TTL signal.

Reverse-power protection is also provided by this option to prevent damage to the instrument if DC (100 V max) or RF (50 W max) voltages are inadvertently applied to the instrument RF OUT connector.

NOTE

DC protection is not included on Model 3002.

Due to the slight "insertion loss" and change in flatness caused by addition of the Programmable Attenuator to the instrument, it will not be possible to obtain +13 dBm output at all frequencies, therefore, the maximum calibrated output is +12 dBm when Option 1B is installed.

Table 8/1B-1 lists instrument specifications which are additions to or deviations from the specifications given in Section 1 of the instrument instruction manual.

Refer to Figure 8/1B-2 for location of added components.

OPERATING INSTRUCTIONS

Front-Panel Operation

Front-panel operation remains basically the same as for a standard instrument, except that the maximum calibrated output is +12 dBm. However, any external RF level programming must be removed or the front-panel indicated output level will be incorrect. Also, the external CW/AM programming must be set to AM in order for the front-panel MODE switch to function properly.

REMOTE PROGRAMMING

Six wires are required to connect the remote programming switches or TTL signals to the rear-panel PROGRAMMING plug (see Figure 8/1B-1): four are used for level programming, one for mode selection (CW or AM), and one is common (ground). 8-4-2-1 BCD switch closures or TTL signals are used to select the attenuator 10 dB steps over a range of 0 to 90 dB as shown in Table 8/1B-2.

After the programming switches have been connected to the rear-panel PROGRAMMING plug, the 0 dB reference point is set to the desired value by the front-panel attenuators; then, the 10 dB steps are

inserted as needed by closing the appropriate remote programming switches. If remote CW/AM mode selection is to be used, the instrument front-panel MODE switch must be placed in the AM position. Closing the remote CW/AM switch selects CW mode, while opening the switch selects AM mode. The instrument MODULATION FREQ switch may be placed in any position as required.

Reverse Power Protection

If an external RF voltage of approximately 6 VRMS or more is accidentally applied to the instrument's RF OUT connector, an internal switch in series with the RF output will open. This prevents damage to the instrument's Attenuator or Output Amplifier. This open switch will be indicated on the front panel by the flashing of the UNLEVELED light. Once the switch is tripped, it will latch in the open position and remain open until reset. Also, a combination of a high mismatch, high output level (over .1 V) and changing frequency can cause the circuit breaker to trip.

After removing the RF signal causing the overload, the switch can be reset by momentarily turning the front-panel AC POWER switch to the OFF position.

NOTE

Normal operation of the UNLEVELED light is a steady glow if the instrument is unleveled. If the circuit breaker is tripped while the instrument is unleveled, the UNLEVELED light will vary in intensity instead of flashing on and off.

CIRCUIT DESCRIPTION

The Option 1B overall Schematic contained in this section should be used to follow the circuit description given below.

Output Protection

With the instrument's AC POWER switch in its OFF position, the Protection Circuit internal relay, in series with the RF output, is in its normally open position. This prevents damage to the attenuators or Output Amplifier if reverse RF power is inadvertently applied to the RF OUT connector while instrument is not in use. As soon as AC power is applied to the instrument, IC201 will compare the RF monitor voltage at J201 to a fixed reference voltage of approximately 5 volts. As long as the RF monitor voltage is less than the 5 volt reference, the output of IC201 will be approximately +17 volts. This positive output from IC201 turns on the relay driver, Q201, which energizes the Protection Circuit relay, thus completing the RF output circuit.

The positive output from IC201 also turns on Q202; thus effectively grounding pin 7 of timer IC202 which operates as an astable oscillator. With pin 7 grounded, the timer is inoperative, and its output, pin 3, is high. The high output from IC202 turns off Q213 and thus prevents any current flow to the front-panel UNLEVELED lamp.

If an external RF signal exceeding 6 VRMS is applied to the instrument's RF OUT connector, the RF monitor voltage at J201 will go above 5 volts. This will produce a negative output from IC201, and the feedback provided by CR202 and R211 will latch IC201 in this state. The negative output from IC201 will turn off relay driver Q201 and cause the Protection Circuit relay to return to its normally open position, thereby removing the external RF signal from the Attenuator circuitry.

The negative output from IC201 also turns off Q202, thus removing the ground on pin 7 of timer IC202, which allows the timer to operate as an astable oscillator. The output on pin 3 of IC202 then varies between 0 and +7

volts. As the output swings down toward 0, Q213 turns on and supplies current to the front-panel UNLEVELED lamp; then, as the output rises toward +7 volts, Q213 again turns off and prevents current flow to the UNLEVELED lamp. This on/off cycle of Q213 thus causes the UNLEVELED lamp to flash.

After the external RF signal is removed, IC201 can be unlatched by momentarily removing AC power from the instrument.

CW/AM Mode Selection

With the instrument's MODULATION MODE switch set to its AM position, mode select relay K201 enables remote selection of either CW or AM modes.

Q212 is an inverter which controls relay driver Q211. With the base of Q212 (J101 pin 30) grounded, Q212 is turned off; therefore, Q211 is turned on and effectively grounds one side of K201 's coil. This energizes K201 and opens its contacts to place the instrument in its CW mode.

With relay K201 in its de-energized (normally closed) position, modulation signals (DC, 400 Hz, 1 kHz, or EXT.) from the Modulation Board are applied through the relay contacts to the Meter Board where they are combined with level programming voltage to produce amplitude modulation of the Output Amplifier output. When K201 is energized, its contacts open; thus, modulation signals are removed from the Meter Board and instrument is in the CW mode.

RF Level Programming

The Programmable Attenuator contains one 10 dB section and four 20 dB sections; however, two of the 20 dB sections are wired together to provide 40 dB of attenuation. The resulting four attenuator pads (10 dB, 20 dB, 40 dB, and 20 dB) can be combined in 10 dB steps to give attenuation ranging from 0 to 90 dB. The positive terminal of each attenuator section is connected to +27 volts DC; then, each attenuator pad is activated when required by grounding its negative terminal through one of four identical inverter/divider transistor circuits.

For example, to insert 10 dB of attenuation, the "1" wire (J101 pin 26) is grounded by a contact closure or TTL signal. This turns off inverter Q210 which then turns on driver Q209 and grounds the negative terminal of the 10 dB pad through R229. If the "8" wire (J101 pin 29) is grounded, 80 dB of attenuation will be activated as follows. The base of Q204 is grounded directly. The base of Q206 is grounded through CR205, and the base of Q208 is grounded through CR206. This turns off inverters Q204, Q206, and Q208 which turns on drivers Q203, Q205, and Q207, respectively. The drivers ground the negative terminals of the 20 dB, 40 dB, and 20 dB attenuator pads through R226, R227, and R228, respectively.

Note that CR205 and CR206 are forward-biased and conduct only when the "8" wire is grounded. If the "4" wire or "2" wire is grounded, the diodes are reverse-biased and do not conduct.

MAINTENANCE

If a malfunction occurs, the trouble can be localized and repaired with the aid of the circuit description and schematic.

No preventative maintenance is required for the RF Level Programming option; however, periodic testing is recommended to insure proper operation of the programming and the Protection Circuits.

The level programming can be checked with the following procedure:

NOTE

OPTION 1B

A power meter can be used to check the RF level over a range of 0 to 30 dB; whereas, a spectrum analyzer is required to check the entire 0 to 90 dB range.

With a power meter or spectrum analyzer connected to the instrument RF OUT connector, set the front-panel attenuators for a convenient reference on the power meter or analyzer with remote programming set for 0 dB; then step through remote programming in 10 dB steps from 0 to 90 dB. The output should be within accuracy specifications as given for this option.

The following procedure is recommended to insure proper operation of the Protection Circuit. The top cover must be removed from the instrument.

With instrument operating normally at 100 MHz in the CW mode, connect a 50 Ω detector to the instrument RF OUT connector and set output level to +5 dBm. Monitor the detector DC output on a suitable oscilloscope.

Circuitry in Attenuator Driver M42 is checked by pushing the momentary switch located on top of the module. This switch lowers the trip level of the module. While holding the switch closed, use the front-panel OUTPUT VERNIER to slowly increase output level until the Protection Circuit trips. This causes the UNLEVELED lamp to flash, and the oscilloscope to go to zero.

The circuit can be reset by momentarily turning the AC POWER switch off. Perform the same test at 500 MHz. At 100 MHz, the protection circuit should trip at +7.5 dBm ±1 dB; whereas, at 500 MHz, it should trip at an output level of +10.5 dBm ±2 dB. Additional tests can be performed as desired. For example, VSWR and insertion loss can be checked in the same manner as any passive device. Also, if available, a high-power RF-signal source, set for an output of slightly over 0.7 W, can be used to verify Protection Circuit operation.

SCHEMATIC AND PARTS LIST

The Option 1B Schematic and applicable Parts Lists are included in this section.

TABLE 8/1B-1. SPECIFICATIONS

Output Protection		
	FREQUENCY RANGE	1 to 520 MHz (.001 to 520 MHz on 3002B)
	INSERTION LOSS	<0.2 dB
	TRIP TIME	<2 msec
	RF TRIP VOLTAGE	4.5 to 5.5 volts (0.5 W)
	MAX RF	50 W
	DC BLOCKING VOLTAGE	100 volts max (N/A on 3002)
RF Level Programming		
	POWER LEVEL	The maximum calibrated output is +12 dBm (.891 VRMS) when Option 1B is installed
	PROGRAMMED RANGE	0 to 90 dB in 10 dB steps; 0 dB reference point is set to desired value by the instrument front-panel Attenuators. E.g., if 0 dB reference is set to 0 dBm, then range is 0 dBm to -90 dBm. If 0 dB reference is set to -50 dBm, then range is -50 dBm to -140 dBm.
	ACCURACY EACH STEP	10 dB $\pm$0.1 dB
	SWITCHING SPEED	10 dB step: Typ. < 3 msec Max. < 6 msec
	IMPEDANCE	50 ohm (SWR < 1.3)
	FLATNESS	$\pm$0.75 dB

TABLE 8/1B-2 REMOTE PROGRAMMING

R.P. PIN #	29	28	27	26	30
BCD WIRE	8	4	2	1	
0 dB	-	-	-	-	
10	-	-	-	X	
20	-	-	X	-	
30	-	-	X	X	
40	-	X	-	-	
50	-	X	-	X	
60	-	X	X	-	
70	-	X	X	X	
80	X	-	-	-	
90	X	-	-	X	
CW					X
AM					-

- = Switch open or HI TTL signal
X = Switch closed or LO TTL signal (R.P. pin is grounded).

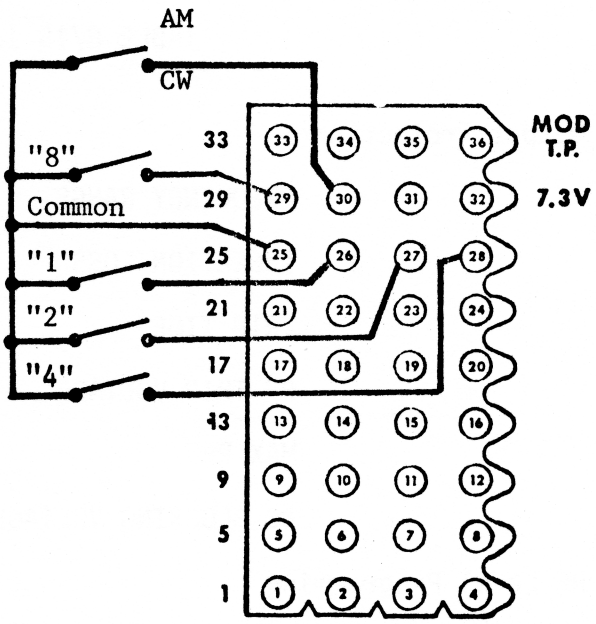

Figure 8/1B-1. Plug Connections

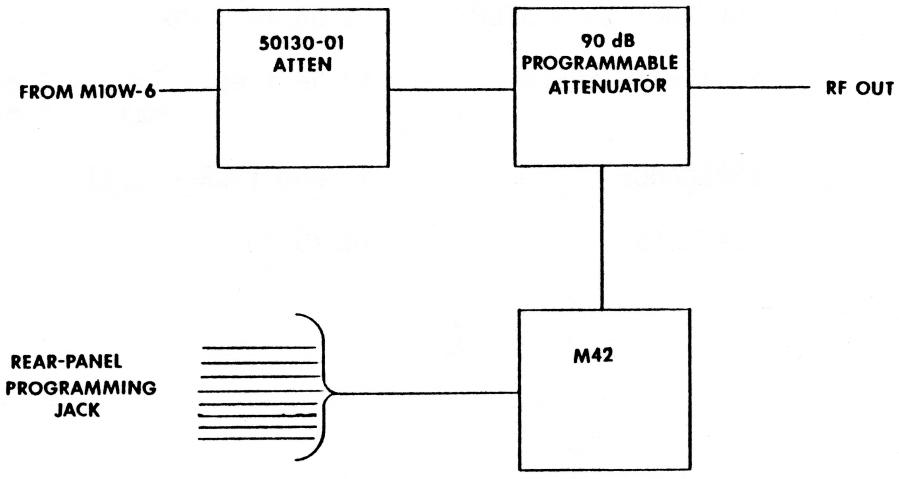

Figure 8/1B-2. Block Diagram

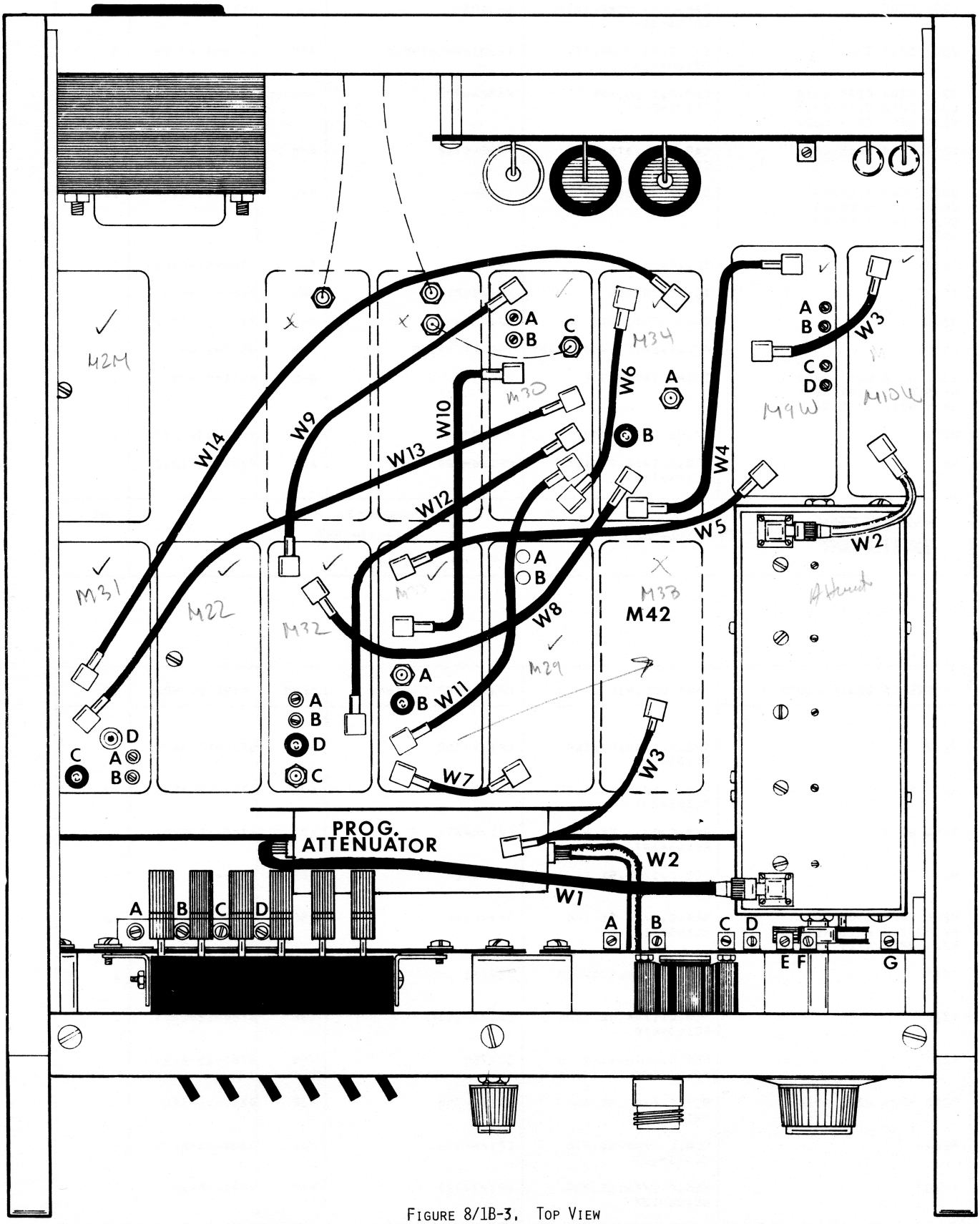

FIGURE 8/1B-3, TOP VIEW

REFERENCE DESIGNATORS	PART DESCRIPTION	ORIG-MFGR-PART-NO	MFGR	WAVETEK NO.	QTY
C201 C205	CAP,CER,.01MF,100V CD103-310	68U103M	MDC	1510-10-2103	2
C202 C203 C204	CAP,TANT,10MF,25V CE120-010	162D106X0025DD2	SPR	1510-21-7100	3
C206 C208 C209 C210 C211 C212 C213 C217 C218 C219 C220 C221	CAP,F.T.,6.8PF CF102-R68	FA5C-6892	A-B	1510-30-1689	12
C207 C214 C215 C216	CAP,F.T.,470PF CF101-147	FA5C-4712	A-B	1510-30-0471	4
CR201 CR202 CR203 CR204 CR205 CR206 CR207 CR208 CR209 CR210	DIODE DR000-001	1N4004	P-C	4806-01-4004	10
IC201	IC,IC000-002	N5741CV	SIG	7000-57-4100	1
IC202	IC IC000-006	MC1455P1	MOT	7000-14-5500	1
J201	CONN JF000-005	37JR116-1	S-C	2110-03-0002	1
K201	RELAY,SPDT MR000-002	191TE1C1-12G	SGM	4510-00-0002	1
Q201 Q202 Q203 Q204 Q205 Q206 Q207 Q208 Q209 Q210 Q211 Q212	TRANS QA038-541	2N3854A	G-E	4901-03-8541	12
Q213	TRANS QB000-009	MPS3702	MOT	4902-03-7020	1
R201	RES,C,1/4W,5%,12K RC103-312	CF1/4-12K	ASE	4700-15-1202	1

WAVETEK PARTS LIST	TITLE ATTEN DRIVE,M42	ASSEMBLY NO. 1114-00-0057 PAGE: 1	REV

REFERENCE DESIGNATORS	PART DESCRIPTION	ORIG-MFGR-PART-NO	MFGR	WAVETEK NO.	QTY
R202	RES,C,1/4W,5%,360 RC103-136	CF1/4-360	ASE	4700-15-3600	1
R203 R211	RES,C,1/4W,5%,4.7K RC103-247	CF1/4-4.7K	ASE	4700-15-4701	2
R204 R218	RES,C,1/4W,5%,47K RC103-347	CF1/4-47K	ASE	4700-15-4702	2
R205	RES,C,1/4W,5%,1K RC103-210	CF1/4-1K	ASE	4700-15-1001	1
R206 R207 R208 R209 R210 R212 R213 R214 R215 R216 R217 R222	RES,C,1/4W,5%,10K RC103-310	CF1/4-10K	ASE	4700-15-1002	12
R219	RES,C,1/4W,10%,22M RC104-622	CB2261	A-B	4700-16-2205	1
R220	RES,C,1/4W,5%,100K RC103-410	CF1/4-100K	ASE	4700-15-1003	1
R221	RES,C,1/4W,5%,4.7M RC103-547	CB4755	A-B	4700-15-4704	1
R223 R226 R228 R229	RES,C,1/4W,5%,390 RC103-139	CF1/4-390	ASE	4700-15-3900	4
R224	RES,C,1/4W,5%,270 RC103-127	CF1/4-270	ASE	4700-15-2700	1
R225	RES,C,1/4W,5%,220 RC103-122	CF1/4-220	ASE	4700-15-2200	1

WAVETEK PARTS LIST	TITLE ATTEN DRIVE,M42	ASSEMBLY NO. 1114-00-0057 PAGE: 2	REV

REFERENCE DESIGNATORS	PART DESCRIPTION	ORIG-MFGR-PART-NO	MFGR	WAVETEK NO.	QTY
R227	RES,C,1/4W,5%,200 RC103-120	CF1/4-200	ASE	4700-15-2000	1
R230	RES,C,1/4W,5%,22K RC103-322	CF1/422K	ASE	4700-15-2202	1
S201	SWITCH,SM000-007	30-1	G-H	5111-00-0002	1

WAVETEK PARTS LIST	TITLE ATTEN DRIVE,M42	ASSEMBLY NO. 1114-00-0057 PAGE: 3	REV

RF LEVEL PROGRAMMING
OPTION — 1B

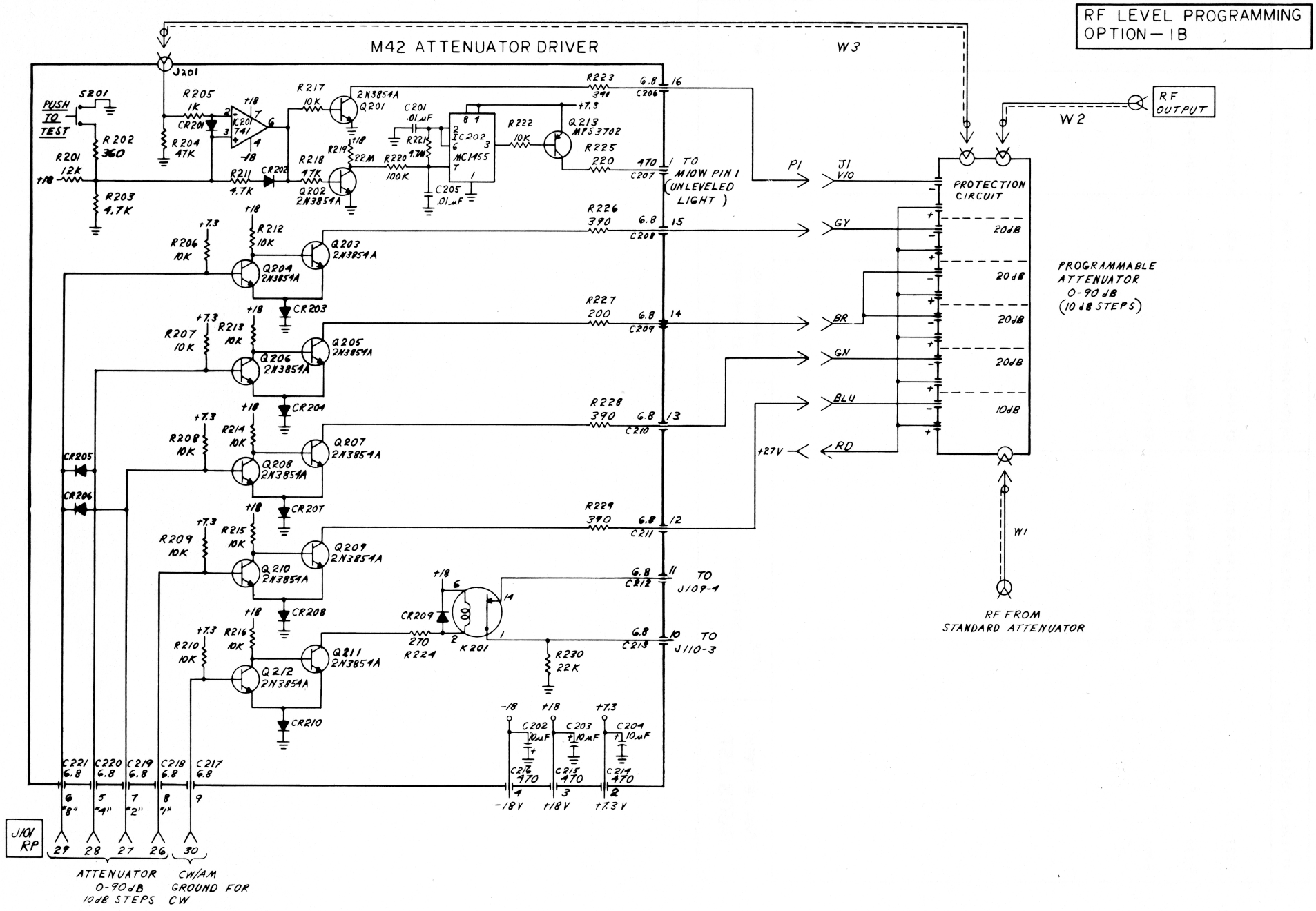

OPTION -3

RF OUTPUT PROTECTION

INTRODUCTION

Option 3 is a circuit breaker in the RF output system of the instrument. This prevents damage to the RF output system in the event that large RF signals are fed into the signal generator while testing a transceiver. In addition to the RF protection, the option contains a DC block which will prevent damage to the Attenuator if the RF output is connected to a circuit operating at a DC potential.

SPECIFICATIONS

Frequency Range	1 to 520 MHz
Insertion Loss*	<.2 dB
VSWR**	< 1.15
Trip Time	< 2 msec
RF Trip Level	≈ .7 W
Max RF	50 W
DC Blocking Voltage	100 Volts

* This loss is calibrated out when module is installed in the signal generator.

** The VSWR of the generator is increased to <1.25 when this module is installed.

OPERATING INSTRUCTIONS

If an external RF voltage of approximately 6 VRMS or more is accidentally applied to the instrument's RF output connector, an internal switch in series with the RF output will open. This prevents damage to the instrument's Attenuator or Output Amplifier. This open switch will be indicated on the front panel by the flashing of the UNLEVELED light. Once the switch is tripped, it will latch in the open position and remain open until reset. Also, a combination of a high mismatch, high output level (over .1 V) and changing frequency can cause the circuit breaker to trip.

After removing the RF signal causing the overload, the switch can be reset by momentarily turning the front-panel AC POWER switch off.

NOTE: Normal operation of the UNLEVELED light is a steady glow if the instrument is unleveled. If the circuit breaker is tripped while the instrument is unleveled, the UNLEVELED light will vary in intensity instead of flashing on and off.

THEORY OF OPERATION

Figure 8/3-1 is a block diagram of the RF circuit breaker. This block diagram, along with the M35-1 Schematic, should be used to follow the information contained in this section.

With the instrument's POWER switch set to the OFF position, relay K1 is in it's normally open position. This prevents any damage to the instrument while it is not in use. As soon as AC power is applied to the instrument, IC1 will compare the voltage from RF monitor CR1 to a fixed reference voltage of approximately 5 V. As long as the output of the monitor is less than the 5 V reference voltage, the output of IC1 will be approximately +17 V. This positive output from IC1 turns on the relay driver, Q1. This engerizes relay K1, thus completing the RF output circuit.

The positive output from IC1 also turns on Q2. This effectively grounds pin 7 of timer IC2, which is being operated as as astable oscillator. With pin 7 grounded, the timer is inoperative, and its output, pin 3, is high. The high output from IC2 turns off Q3. This prevents any current flow to the front-panel UNLEVELED light.

If an external RF signal exceeding 6 VRMS is applied to the instrument's RF output connector, the output from monitor diode CR1 will go above 5 V. This will produce a negative output from IC1. The positive feedback provided by R7 will latch IC1 in this state. The negative output from IC1 will turn off relay driver Q1. This causes relay K1 to return to its normally open position, re-

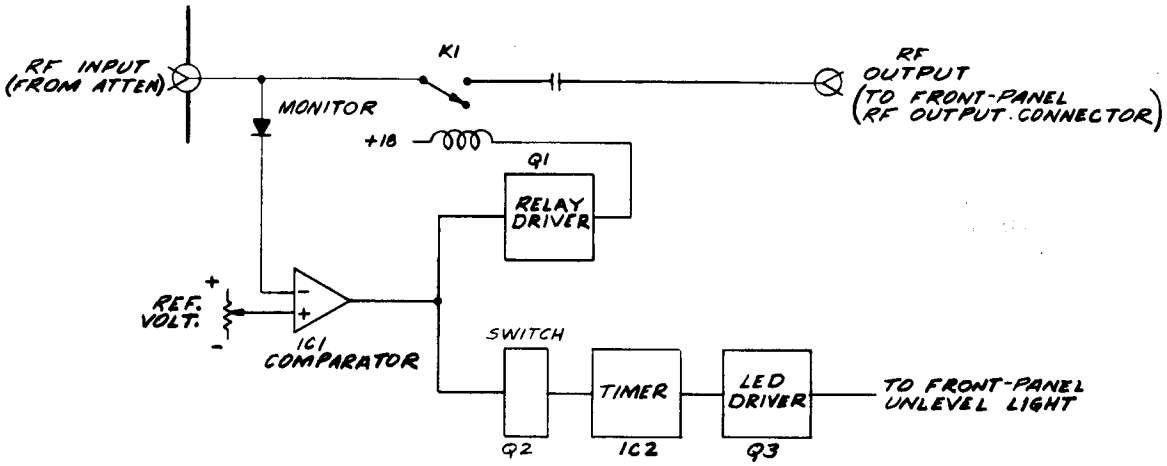

Figure 8/3-1. Block Diagram

moving the external RF signal from the instrument.

The negative output from IC1 also turns off Q2, thus removing the short on pin 7 of timer IC2. This allows the timer to operate as an astable oscillator. The output, pin 3 of IC2, then varies between 0 and 7 volts. This causes Q3, the LED driver, to supply current intermittently to the front-panel UNLEVELED light, causing it to flash.

After the RF overload is removed, IC1 can be unlatched by momentarily removing AC power to the instrument.

OPERATION CHECK

The following procedure is recommended to insure proper operation of the protection device. The top cover must be removed from the instrument.

With the instrument operating normally in the CW mode, set the output level to +5 dBm. Connect a 50 ohm detector to the output of the signal generator. The DC output of the detector should be monitored on a suitable oscilloscope. Set the output frequency to 100 MHz.

The circuitry in the M35-1 is checked by pushing the momentary switch located on top of the module. This switch lowers the trip level of the module. While holding down the switch slowly increase the output of the unit using the VERNIER until the M35-1 trips. This causes the circuit breaker to open and latch, the UNLEVELED light to flash, and the detected output displayed on the oscilloscope to go to zero. The circuit breaker can then be reset by momentarily turning the AC POWER switch off. The M35-1 should have tripped at +7.5 dBm $\pm$1 dB. Perform the same test at 500 MHz. It should then trip at an output level of +10.5 dBm $\pm$2 dB.

The above procedure, while not a complete performance check, is considered adequate for most applications. Additional tests can be performed as desired. For example, insertion loss and VSWR can be checked in the same manner as any passive device. Also, if available, a high power RF signal source, set for an output of slightly over .7 W can be used to verify circuit breaker operation.

MAINTENANCE

The only maintenance for the RF circuit breaker is periodic testing to insure its operation. If a malfunction occurs, a trouble can be localized and repaired with the aid of the theory of operation and the schematic. If the problem is a defective monitor diode, care should be observed to keep lead length and position the same as the original diode.

Option 3 can be factory or field installed. The following procedure should be followed for field installation.

OPTION 3 FIELD INSTALLATION KIT

QTY	DESCRIPTION	PART #
1	RF Circuit Breaker Module	M35-1
1	RF Cable	W1A
1	RF Cable	W1B
1	6/32 x 5/8 Screw	HS101-610

Install the M35-1 module in the location shown in Figure 8/3-2 and secure with the 6-32 hold-down screw. Remove the front-panel RF output cable, W1, and replace with W1A and W1B which will route the RF output signal thru the M35-1 module.

Before use, the module should be tested by the procedure shown in Operation Check.

Note: The above information applies to all 3000 Series instruments except Models 3002 and 3004. For these instruments the M35-1 is replaced by M35-2, which permits operation from .001 to 520 MHz, but does not inlcude DC blocking. All other specifications, operating instructions, and descriptions apply.

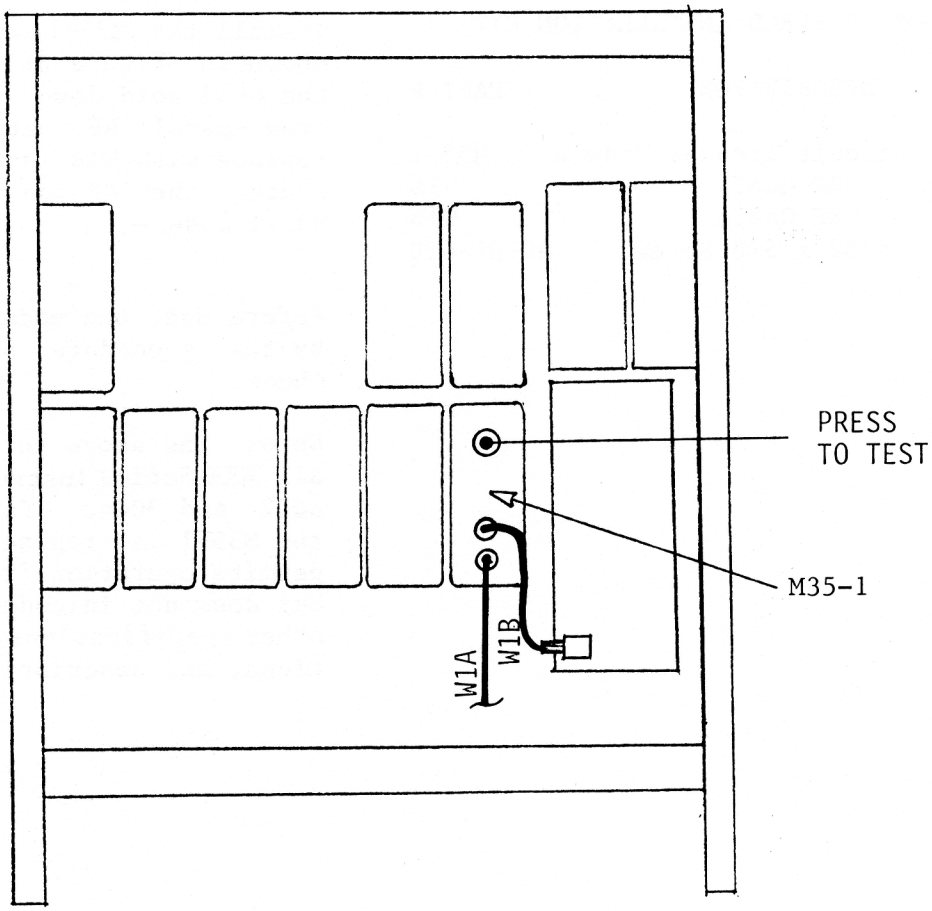

Figure 8/3-2. Top View, RF Circuit Breaker Location

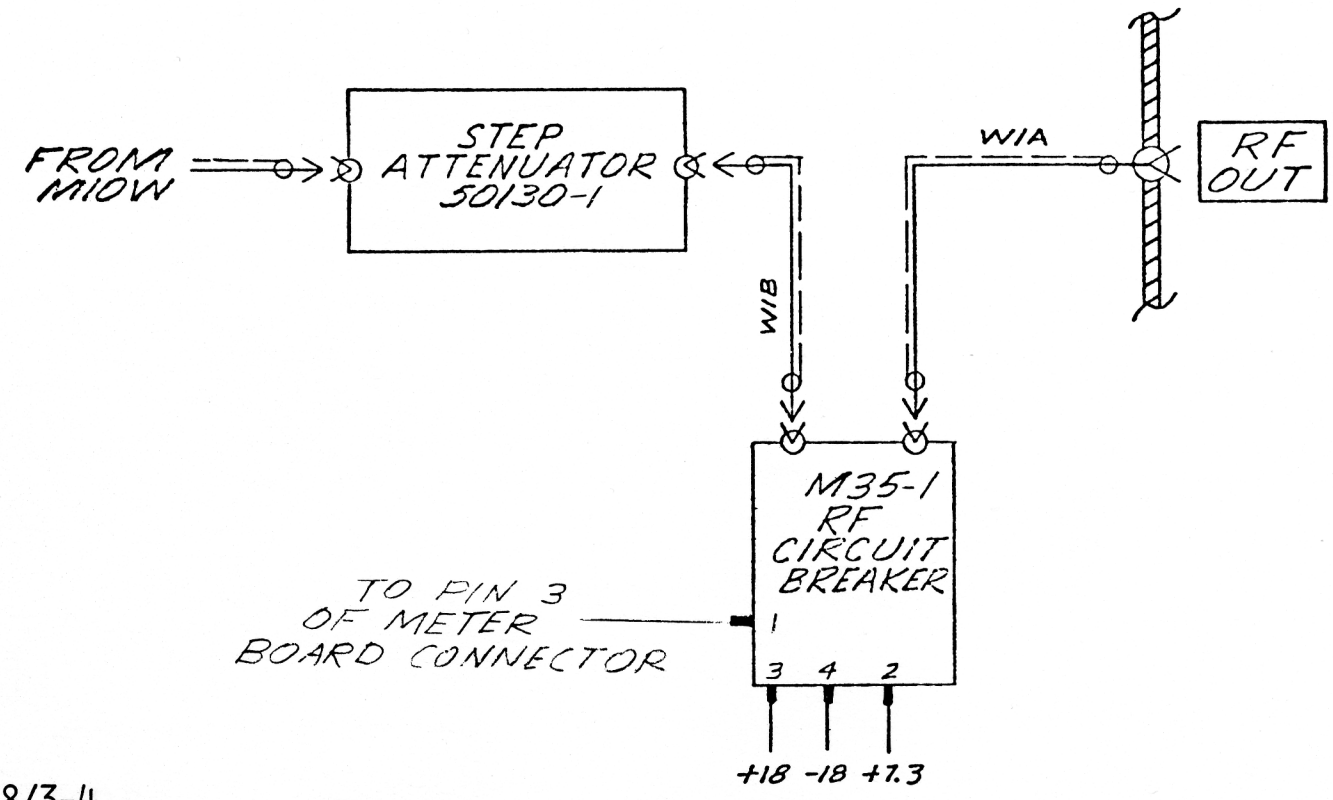

REFERENCE DESIGNATORS	PART DESCRIPTION	ORIG-MFGR-PART-NO	MFGR	WAVETEK NO.	QTY
C1	CAP,F.T.,.09MF,1KV CF111-390	CL003DA903P	A-H	1510-30-7903	1
C10 C11 C2 C8 C9	CAP,FT,500PF,20%250V CF104-150	4420-500PF	AER	1510-30-3501	5
C3 C4	CAP,CER,.01MF,100V CD103-310	68U103M	MDC	1510-10-2103	2
C5 C6 C7	CAP,TANT,10MF,25V CE120-010	162D106X0025DD2	SPR	1510-21-7100	3
C12 C13 C14 C15	CAP,F.T.,470PF CF101-147	FA5C-4712	A-H	1510-30-0471	4
CR1 CR4	DIODE DG100-341	1N34A	HIT	4807-01-0034	2
CR2 CR3	DIODE DR000-001	1N4004	P-C	4806-01-4004	2
IC1	IC,IC000-002	NS741CV	SIG	7000-57-4100	1
IC2	IC IC000-006	MC1455P1	MOT	7000-14-5500	1
J1 J2	CONN,JACK,JE000-007	050-643-0000-31	SEL	2110-02-1003	2
K1	RF RELAY 2PDT MR000-005	3SCS5007K1	G-E	4510-00-0003	1
L1 L2	FERRITE CHOKE LA009-010	T1255-2	HYT	1810-05-0002	2
Q1 Q2	TRANS QA038-541	2N3854A	G-E	4901-03-8541	2

WAVETEK PARTS LIST	TITLE RF CKT BKR,M35-1	ASSEMBLY NO. 1114-00-0010 PAGE: 1	REV B

REFERENCE DESIGNATORS	PART DESCRIPTION	ORIG-MFGR-PART-NO	MFGR	WAVETEK NO.	QTY
Q3	TRANS Q8000-009	MPS3702	MOT	4902-03-7020	1
R1	RES,C,1/4W,5%,51 RC103-051	CF1/451	ASE	4700-15-5109	1
R3 R9	RES,C,1/4W,5%,47K RC103-347	CF1/4-47K	ASE	4700-15-4702	2
R4	RES,C,1/4W,5%,12K RC103-312	CF1/4-12K	ASE	4700-15-1202	1
R5	RES,C,1/4W,5%,360 RC103-136	CF1/4-360	ASE	4700-15-3600	1
R6	RES,C,1/4W,5%,4.7K RC103-247	CF1/4-4.7K	ASE	4700-15-4701	1
R7	RES,C,1/4W,10%,4.7K RC104-247AB	CB4721	A-H	4705-16-4701	1
R13 R8	RES,C,1/4W,10%,10K RC104-310AB	CB1031	A-H	4705-16-1002	2
R10	RES,C,1/4W,10%,22M RC104-622	CB2261	A-H	4700-16-2205	1
R11	RES,C,1/4W,5%,100K RC103-410	CF1/4-100K	ASE	4700-15-1003	1
R12	RES,C,1/4W,10%,4.7M RC104-547	CB4751	A-H	4700-16-4704	1
R14	RES,C,1/4W,5%,220 RC103-122	CF1/4-220	ASE	4700-15-2200	1

WAVETEK PARTS LIST	TITLE RF CKT BKR,M35-1	ASSEMBLY NO. 1114-00-0010 PAGE: 2	REV B

REFERENCE DESIGNATORS	PART DESCRIPTION	ORIG-MFGR-PART-NO	MFGR	WAVETEK NO.	QTY
R15	RES,C,1/4W,5%,2.2K RC103-222	CF1/4-2.2K	ASE	4700-15-2201	1
R17	RES,C,1/4W,5%,1K RC103-210	CF1/4-1K	ASE	4700-15-1001	1
S1	SWITCH,SM000-007	30-1	G-H	5111-00-0002	1
FOR M35-2 DELETE C1 AND ADD:					
C16	CAP,CER,.15MF,100V	CY20A154M	C-L	1510-11-1154	1

WAVETEK PARTS LIST	TITLE	ASSEMBLY NO.	REV
	RF CKT BKR,M35-1	1114-00-0010	B
		PAGE: 3	

SCHEMATIC
RF CIRCUIT BREAKER
M35-1/M35-2

REV B

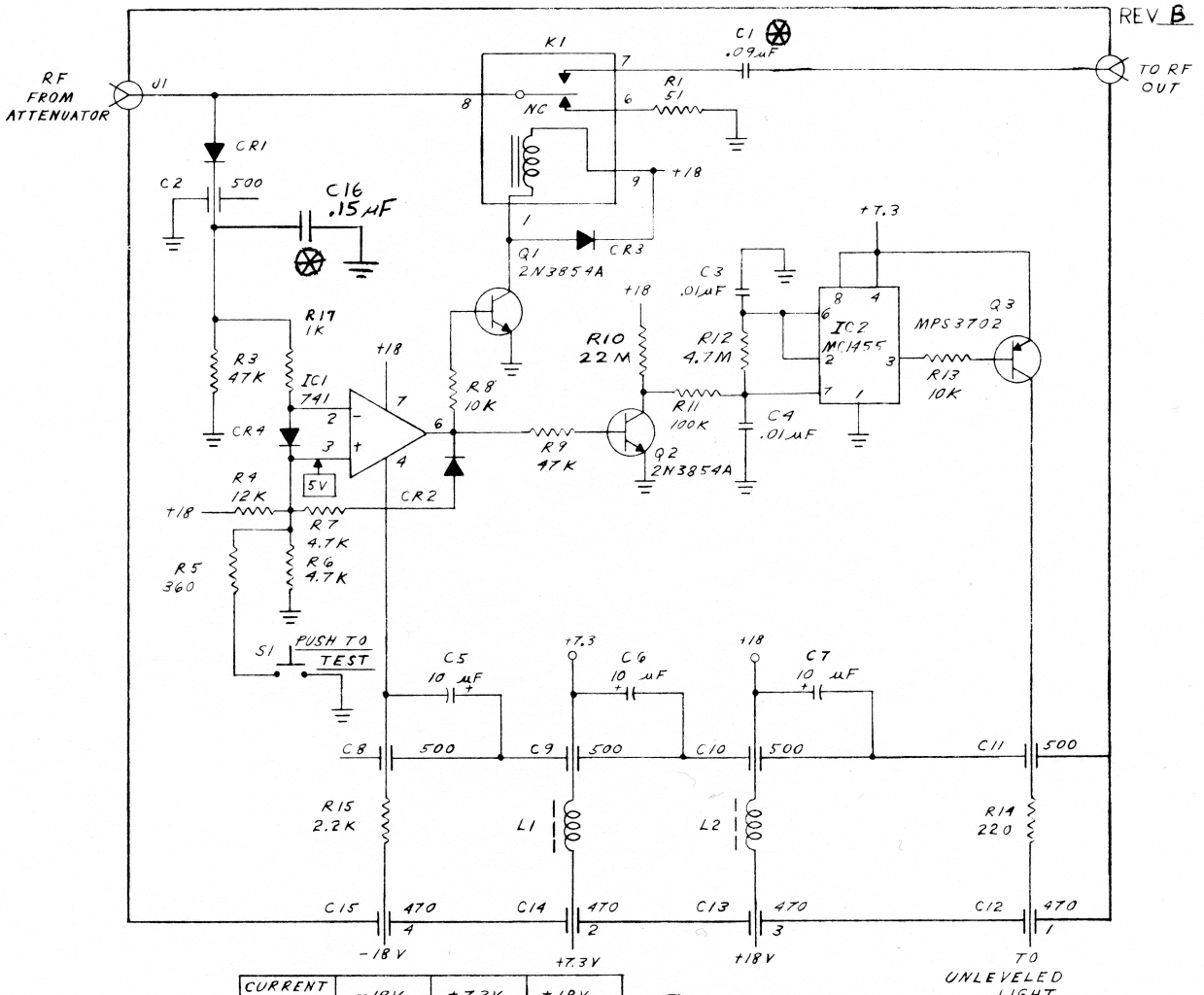

CURRENT INPUTS	-18V	+7.3V	+18V
NORMAL OPERATION	1ma	4ma	12ma
TRIPPED	3ma	8ma (AV)	3ma

⊛ C1 ON -1 ONLY

C16 ON -2 ONLY

OPTION -4

AUXILIARY RF OUTPUT

INTRODUCTION

This option provides a constant amplitude Auxiliary RF Output signal on the rear panel of the signal generator. The amplitude (-10 dBm) of this signal is sufficient to drive most frequency counters. This auxiliary signal does not contain amplitude modulation, however, it does contain frequency modulation.

This factory-installed option entails changing the M9W Oscillator to an M9W-1, the addition of an M37 Amplifier module, harnessing, and additional cabling to the rear panel. The addition and operation of this option has no effect on the operation or specifications of the signal generator. See Figure 5-6 for location of the M37 and cable connections.

SPECIFICATIONS

Frequency Range	1 to 520 MHz
Level	-10 dBm ±.5dB (70 mV)
Harmonic output	25 dB below fundamental from 1 to 520 MHz.

OPERATING INSTRUCTIONS

To use the Auxiliary RF Output, disconnect the 50 Ω termination on the rear panel and connect a frequency counter or other monitoring device with a 50 Ω coaxial cable. The Auxiliary RF Output cable should be kept as short as possible. The output is controlled by a rear-panel on/off switch.

IMPORTANT

When not in use, terminate the Auxiliary RF Output with the 50 Ω terminator supplied.

Note: Although the reverse isolation of the Auxiliary RF Output is approximately 30 dB, a signal that is coupled into the Auxiliary RF Output could be coupled to the main RF output on the instrument's front panel. For example, subharmonic signals at a counter's input can be coupled through the instrument and applied to the device under test.

CIRCUIT DESCRIPTION

The M37 module contains a wide band amplifier, monitor diode, an error amplifier and a voltage variable attenuator.

The input signal to the M37 module is fed thru the VVA to amplifier IC1. The approximate gain of the amplifier is 13 dB from 1 to 520 MHz. The monitor diode, CR2, detects the output from the wide band amplifier. This detected level is compared to a DC reference by the error amp, IC2. The output of the error amp is fed to the PIN diode (VVA) attenuator which changes the input level to the wide band amplifier until the monitored signal produces a DC level equal to the reference level. This reference level is adjusted by R5, the output level control.

The output impedance is provided by the resistor, R2, connected between the monitor and the RF output connector.

MAINTENANCE

The only maintenance for the Auxiliary RF Output is a periodic check of the output level. If a malfunction occurs, a trouble can be localized and repaired with the aid of the theory of operation and the schematics. The M37 Schematic is included in this section. The M9W/M9W-1 Schematic is located in Section 7 of this manual.

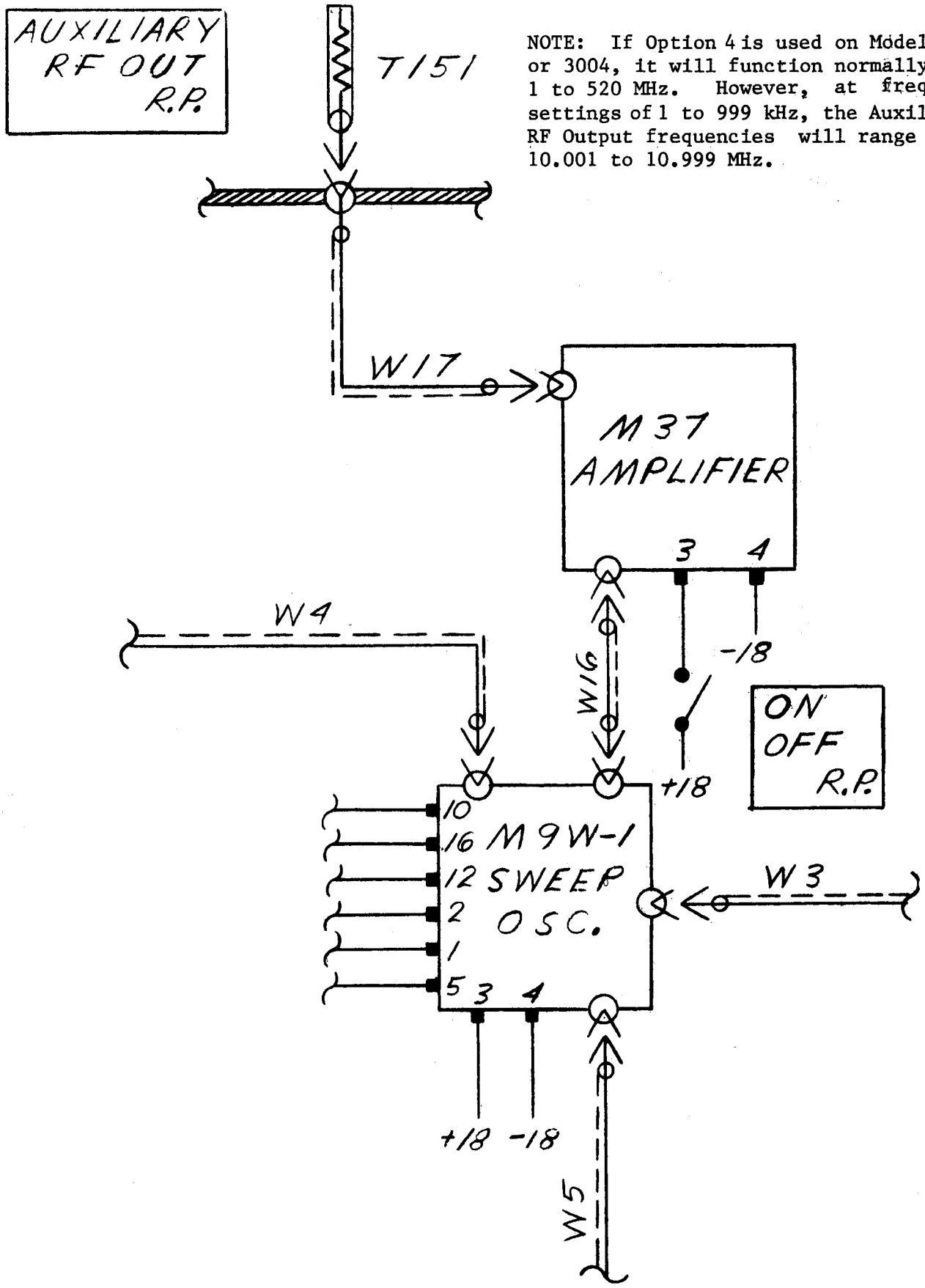

NOTE: If Option 4 is used on Model 3002 or 3004, it will function normally from 1 to 520 MHz. However, at frequency settings of 1 to 999 kHz, the Auxilliary RF Output frequencies will range from 10.001 to 10.999 MHz.

Option 4, additional wiring

REFERENCE DESIGNATORS	PART DESCRIPTION	ORIG-MFGR-PART-NO	MFGR	WAVETEK NO.	QTY
C1	CAP,Q.C.,3PF CG101-230	QC-3PF	Q-C	1510-40-0030	1
C2 C3	CAP,FT,500PF,20%250V CF104-150	4420-500PF	AER	1510-30-3501	2
C4	CAP,CER,120PF,1KV CD102-112	60U121M	MDC	1510-10-1121	1
C5	CAP,ELECT,1MF,25V CE120-001	162D105X9025BC2	SPR	1510-21-7010	1
C6	CAP,TANT,10MF,25V CE120-010	162D106X0025DD2	SPR	1510-21-7100	1
C7 C8	CAP,F.T.,470PF CF101-147	FA5C-4712	A-B	1510-30-0471	2
CR1	DIODE DP000-050	5082-3080	H-P	4805-02-0002	1
CR2	DIODE DG100-821	1N82AG	G-I	4807-01-0082	1
IC1	IC,IL001-001	GPD-402	AVT	7000-04-0200	1
IC2	IC,IC000-002	N5741CV	SIG	7000-57-4100	1
J1 J2	CONN JF000-005	37JR116-1	S-C	2110-03-0002	2
L1 L2 L3 L4	FERRITE CHOKE LA009-010	T1255-2	HYT	1810-05-0002	4
R1	RES,C,1/4W,5%,150 RC103-115	CF1/4-150	ASE	4700-15-1500	1

REFERENCE DESIGNATORS	PART DESCRIPTION	ORIG-MFGR-PART-NO	MFGR	WAVETEK NO.	QTY
R2	RES,C,1/2W,5%,47 RC105-047	CF1/2-47	ASE	4700-25-4709	1
R3	RES,C,1/4W,5%,82 RC103-082	CF1/4-82	ASE	4700-15-8209	1
R4	RES,C,1/2W,5%,2,2K RC105-222	CF1/2-2,2K	ASE	4700-25-2201	1
R5	POT,10K,RP129-310	360S1038	CTS	4610-00-1103	1
R6	RES,C,1/4W,5%,470K RC103-447	CF1/4-470K	ASE	4700-15-4703	1
R7	RES,C,1/4W,5%,10K RC103-310	CF1/4-10K	ASE	4700-15-1002	1
R8	RES,C,1/4W,5%,47K RC103-347	CF1/4-47K	ASE	4700-15-4702	1

AUXILIARY
RF OUTPUT
M37

REV.___

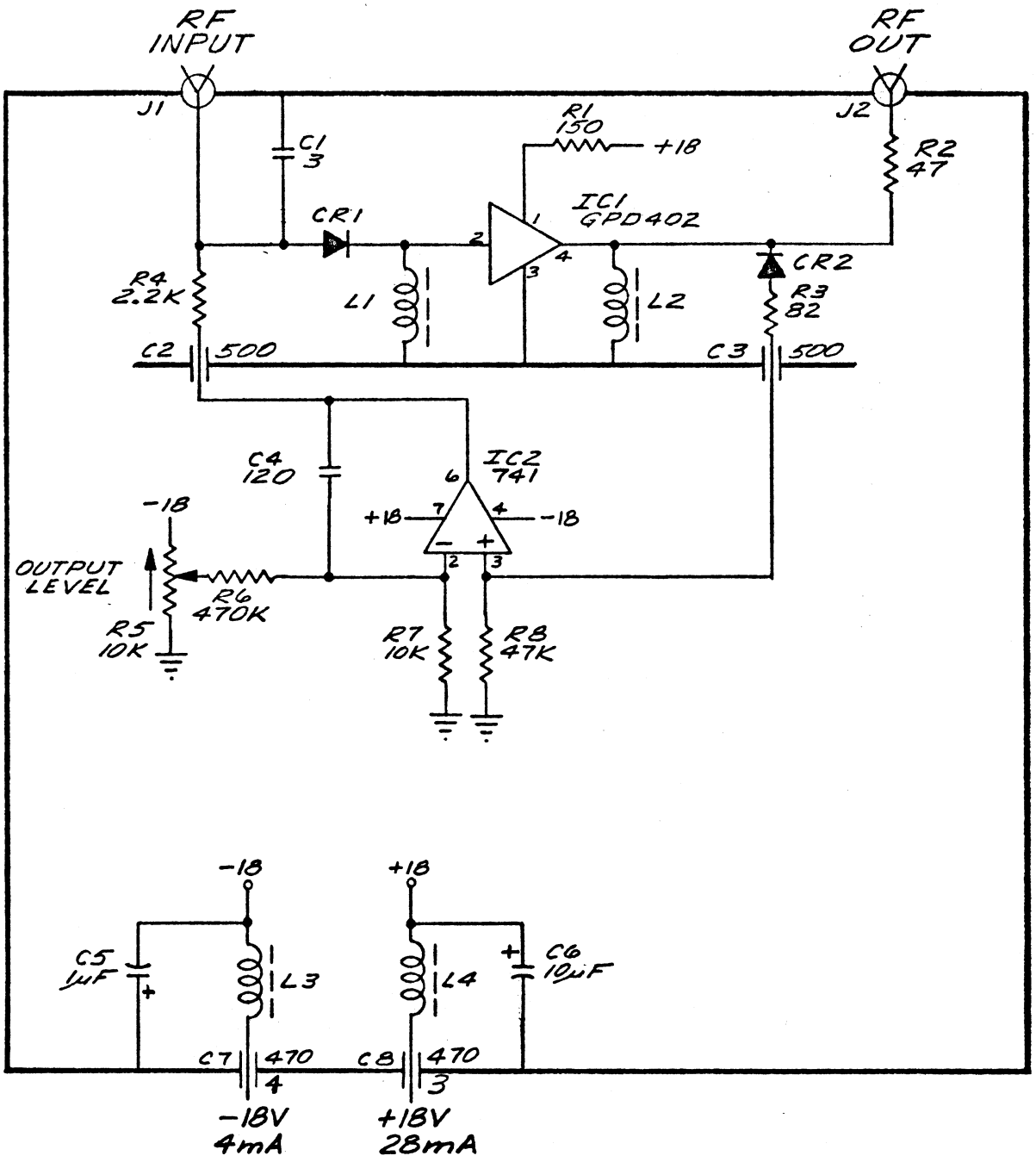

OPTION 7

LOW LEAKAGE

INTRODUCTION

Option 7 provides for a reduction in RF leakage such that less than 0.1 μV is induced in a two-turn, one inch diameter loop (feeding a 50 Ω receiver) held one inch away from any surface, when the instrument is developing 30 mVRMS or less into a 50 Ω termination.

An alternate method of detection is to place a paging receiver with .2 μV sensitivity (such as Motorola A04FNC in a TEK-69 fixture connected to the instrument RF OUT connector) 6 inches in front of the instrument with the instrument OUTPUT STEP ATTENUATOR set at minimum and the instrument frequency set to that of the paging receiver.

The paging receiver IF test point is monitored with an AC voltmeter, and should change less than 0.5 dB.

OPERATION

There is no change in operation from the standard instrument.

CIRCUIT DESCRIPTION

For Option 7, the standard M9W Sweep Oscillator is replaced with an M9W-2. The operation of the M9W-2 is identical to the M9W; the difference is additional shielding and filtering in the M9W-2. Also, additional shielding, filtering for the PROGRAMMING jack inputs, filtering for the LEVEL PROGRAM jack inputs (for Option 1A), and an AC line filter are added to the rear panel of the instrument.

NOTE

If Option 4, Auxilliary RF Output, is also installed, the Sweep Oscillator is an M9W-3.

MAINTENANCE

No calibration or maintenance should be required for this option other than that described in previous sections of this manual.

REFERENCE DESIGNATORS	PART DESCRIPTION	ORIG-MFGR-PART-NO	MFGR	WAVETEK NO.	QTY
14	SWP OSC, M9W-2	M9W-2	W-I	1114-00-0038	1
C49 C50	CAP, CER, 470PF, 1.4KV CD115-147	E61UWAUW471M1.4KV	MDC	1510-11-0471	2
C1 THRU C48	CAP, CER, F.T. 1000PF CF112-210	54-794-010-102P	SPEC	1510-30-8102	48
L1 L2	FERRITE CHOKE LA009-004	T1255-1	HYT	1810-05-0001	2
32	CONN., 5-CKT	07-01-7051	MOL	2113-00-0002	1
33	TERMINAL, MC000-105	05-02-0050	MOL	2113-01-0001	4
24	RECEPTACLE, MC000-016	03-06-1151	MOL	2113-03-0001	1
22	RECEP, 36-PIN MC000-054	03-06-1361	MOL	2113-03-0004	1
25	PLUG, MC000-017	03-06-2151	MOL	2113-04-0001	1
23	PLUG, 36-PIN MC000-055	03-06-2362	MOL	2113-04-0005	1
26	TERMINAL, FEMALE MC000-018	02-06-1131	MOL	2113-05-0001	45
27	TERMINAL, MALE MC000-019	1854	MOL	2113-05-0002	45

WAVETEK PARTS LIST	TITLE	ASSEMBLY NO.	REV
	OPT 7, RED LEAKAGE	1019-00-0006	C
		PAGE: 1	

REFERENCE DESIGNATORS	PART DESCRIPTION	ORIG-MFGR-PART-NO	MFGR	WAVETEK NO.	QTY
C1 C22 C23 C4	CAP, F.T., 6.8PF CF102-R68	FA5C-6892	A-B	1510-30-1689	4
C2	CAP, F.T., 470PF CF101-147	FA5C-4712	A-B	1510-30-0471	1
C3	CAP, F.T., 120PF CF102-112	54-794-001-121K	SPEC	1510-30-1121	1
C5	CAP, CER, 100PF, 1KV CD102-110	60U101M	MDC	1510-10-1101	1
C26 C40 C41 C42 C43 C6 C7 C8 C9	CAP, TANT, .47MF, 50V CE113-447	935	TRW	1510-21-9470	9
C10 C11 C13 C19 C21 C24 C25 C27 C29 C39	CAP, FT, CER, 100PF, 20% CF104-110	4420-100PF	AER	1510-30-3101	10
C12	CAP., CHIP, .1 MF	51C1209-B104Z	CFI	1510-00-3104	1
C14 C15 C16 C17 C33 C34 C35	CAP, Q-C, 10PF, 10%, CG101-310	QC-10PF	Q-C	1510-40-0100	7
C18	CAP, CER, .02UF, 50V	TG-S20	SPR	1510-10-2203	1
C20 C37	CAP, CER, 120PF, 1KV CD102-112	60U121M	MDC	1510-10-1121	2
C28	CAP, FT, 500PF, 20%250V CF104-150	4420-500PF	AER	1510-30-3501	1
C30	CAP, Q.C., .75PF CG101-175	QC-.75PF	Q-C	1510-40-0758	1

WAVETEK PARTS LIST	TITLE SWP OSC, M9W-2	ASSEMBLY NO. 1114-00-0038 PAGE: 1	REV C

REFERENCE DESIGNATORS	PART DESCRIPTION	ORIG-MFGR-PART-NO	MFGR	WAVETEK NO.	QTY
C31	CAP, CHIP, 1PF, 100V CC101-R10	3BN100S1R0C(S)	VAR	1510-00-0010	1
C32	CAP, Q.C., 3PF CG101-230	QC-3PF	Q-C	1510-40-0030	1
C36	CAP, Q-C, 2.0PF, 10% CG101-220	QC-2.0PF	Q-C	1510-40-0020	1
C38	CAP, Q.C., 1PF CG101-210	QC-1PF	Q-C	1510-40-0010	1
C44 C45	CAP, CER, F.T. 1000PF CF112-210	54-794-010-102P	SPEC	1510-30-8102	2
CR1 CR2 CR3 CR4 CR5	DIODE DC000-008	BB205	APX	4803-02-0004	5
CR11 CR7 CR9	DIODE DP000-040	MA47980	M-A	4805-02-0001	3
CR10 CR12 CR8	DIODE DG100-821	1N82AG	G-I	4807-01-0082	3
IC1 IC2 IC3 IC4	IC, IC000-004	N5741T	SIG	7000-57-4101	4
J1 J2 J201	CONN JF000-005	37JR116-1	S-C	2110-03-0002	3
L01	TORRID, 4 TURN	LA009-004-1	HYT	1810-05-0003	1
L02	TORRID, 10 TURN	LA009-010-2	HYT	1810-05-0005	1
L03 L22 L23	TORRID, 10 TURN	LA009-010-1	HYT	1810-05-0004	3
L11 L12 L14 L15 L16 L17 L20 L21 L4 L7 L8	RF CHOKE	CHOKE	W-I	1819-99-9999	11

WAVETEK PARTS LIST	TITLE SWP OSC, M9W-2	ASSEMBLY NO. 1114-00-0038 PAGE: 2	REV C

REFERENCE DESIGNATORS	PART DESCRIPTION	ORIG-MFGR-PART-NO	MFGR	WAVETEK NO.	QTY
L10 L13 L18 L19 L5 L9	CHOKE .22MH 10% LA005-R02	08NR22K	ASE	1810-03-0228	6
L6	CHOKE, .22MH, 10% LA008-R02	506-000022V1	SYS	1810-04-0228	1
Q1	TRANS QA054-580	2N5458	MOT	4901-05-4580	1
Q2	TRANS QB000-013	A430	APX	4902-00-4300	1
Q3 Q4 Q6 Q7	TRANS QA050-530	2N5053	APX	4901-05-0530	4
Q5	TRANS QA051-090	2N5109	SSS	4901-05-1090	1
R1 R15	RES, C, 1/4W, 5%, 12K RC103-312	CF1/4-12K	ASE	4700-15-1202	2
R2 R40	POT, 5K, RP130-250	89PR5K	BEK	4610-00-2502	2
R3	RES, C, 1/4W, 5%, 100 RC103-110	CF1/4-100	ASE	4700-15-1000	1
R4	RES, C, 1/4W, 5%, 10 RC103-010	CF1/4-10	ASE	4700-15-1009	1
R29 R34 R46 R5 R65	RES, C, 1/4W, 5%, 2.2K RC103-222	CF1/4-2.2K	ASE	4700-15-2201	5
R6	RES, C, 1/4W, 5%, 330 RC103-133	CF1/4-330	ASE	4700-15-3300	1
R43 R7	RES, C, 1/4W, 5%, 47K RC103-347	CF1/4-47K	ASE	4700-15-4702	2

REFERENCE DESIGNATORS	PART DESCRIPTION	ORIG-MFGR-PART-NO	MFGR	WAVETEK NO.	QTY
R8	RES, C, 1/4W, 10%, 10M RC104-610	CB1061	A-B	4700-16-1005	1
R9	RES, 1/4, 5%, 6.2K A-B RC103-262AB	CB6225	A-B	4705-15-6201	1
R10	RES, C, 1/4W, 5%, 33K RC103-333	CF1/4-33K	ASE	4700-15-3302	1
R11	RES, C, 1/4W, 5%, 680 RC103-168	CF1/4-680	ASE	4700-15-6800	1
R12 R16	RES, C, 1/4W, 5%, 8.2K RC103-282	CF1/4-8.2K	ASE	4700-15-8201	2
R13 R14	RES, C, 1/4W, 5%, 1K RC103-210	CF1/4-1K	ASE	4700-15-1001	2
R17 R20 R28 R30 R33 R35 R52 R55 R64 R67	RES, C, 1/4W, 5%, 10K RC103-310	CF1/4-10K	ASE	4700-15-1002	10
R18 R23 R54 R57	RES, C, 1/4W, 5%, 470 RC103-147	CF1/4-470	ASE	4700-15-4700	4
R19 R21 R24 R39 R41 R53 R56 R58	RES, C, 1/4W, 5%, 4.7K RC103-247	CF1/4-4.7K	ASE	4700-15-4701	8
R22 R25 R59 R60	RES, C, 1/4W, 5%, 560 RC103-156	CF1/4-560	ASE	4700-15-5600	4
R26 R50	POT, 20K, RP130-320	89PR20K	BEK	4610-00-2203	2
R27 R32	RES, C, 1/4W, 5%, 470K RC103-447	CF1/4-470K	ASE	4700-15-4703	2

REFERENCE DESIGNATORS	PART DESCRIPTION	ORIG-MFGR-PART-NO	MFGR	WAVETEK NO.	QTY
R31 R61	POT, 20K, RP129-320	360S203B	CTS	4610-00-1203	2
R36 R68	RES, C, 1/2W, 5%, 47 RC105-047	EB4705	A-B	4705-25-4709	2
R37	RES, C, 1/4W, 5%, 270 RC103-127	CF1/4-270	ASE	4700-15-2700	1
R38 R66	RES, C, 1/4W, 5%, 47 RC103-047	CF1/4-47	ASE	4700-15-4709	2
R42	RES, C, 1/4W, 5%, 3.3K W-I/RC103-233AB	CB3325	A-B	4705-15-3301	1
R44 R62	RES, C, 1/4W, 5%, 100K RC103-410	CF1/4-100K	ASE	4700-15-1003	2
R45	RES, C, 1/4W, 10%, 1.2K	CB1221	A-B	4705-16-1201	1
R47	RES, C, 1/2W, 5%, 150 RC105-115	CF1/2-150	ASE	4700-25-1500	1
R48	RES, C, 1/4W, 5%, 3.9K RC103-239	CF1/43.9K	ASE	4700-15-3901	1
R49	RES, C, 1/4W, 5%, 5.6K RC103-256	CF1/4-5.6K	ASE	4700-15-5601	1
R51	RES, C, 1/4W, 5%, 1.2K RC103-212	CF1/4-1.2K	ASE	4700-15-1201	1
19	RES, C, 1/4W, 10%, 4.7K RC104-247AB	CB4721	A-B	4705-16-4701	1

RF MIXER ASSEMBLY 1219-00-0055 AND PREAMP ASSEMBLY 1219-00-0054 ARE THE SAME AS FOR THE STANDARD M9W.

OPTION 7

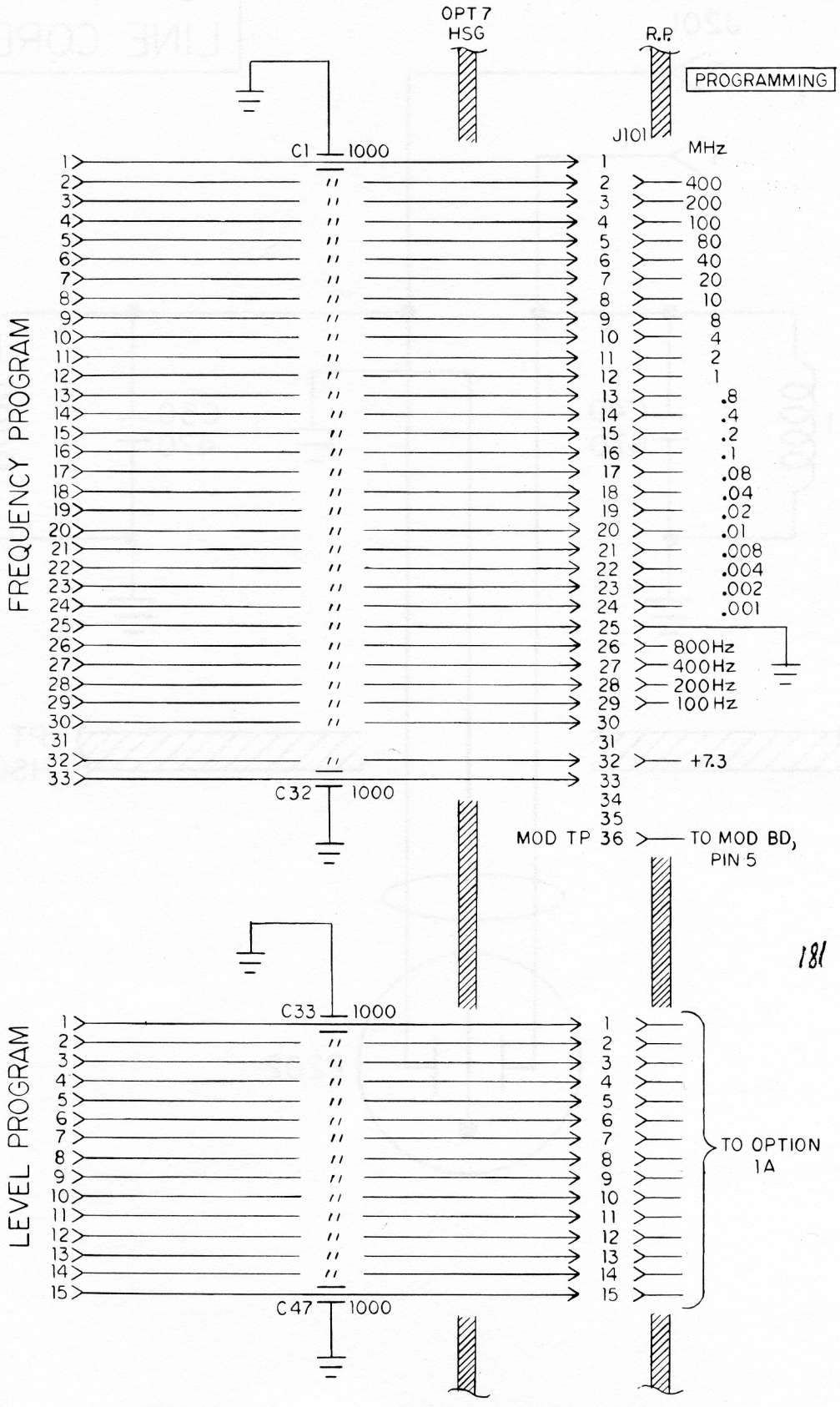
OPT 7
HSG
R.P.
PROGRAMMING
J101
MHz
C1 1000
FREQUENCY PROGRAM
1
2 400
3 200
4 100
5 80
6 40
7 20
8 10
9 8
10 4
11 2
12 1
13 .8
14 .4
15 .2
16 .1
17 .08
18 .04
19 .02
20 .01
21 .008
22 .004
23 .002
24 .001
25
26 800Hz
27 400Hz
28 200Hz
29 100Hz
30
31
32 +7.3
33
34
35
MOD TP 36 TO MOD BD, PIN 5
C32 1000
C33 1000
LEVEL PROGRAM
1
2
3
4
5
6
7
8
9
10
11
12
13
14
15
TO OPTION 1A
C47 1000

181

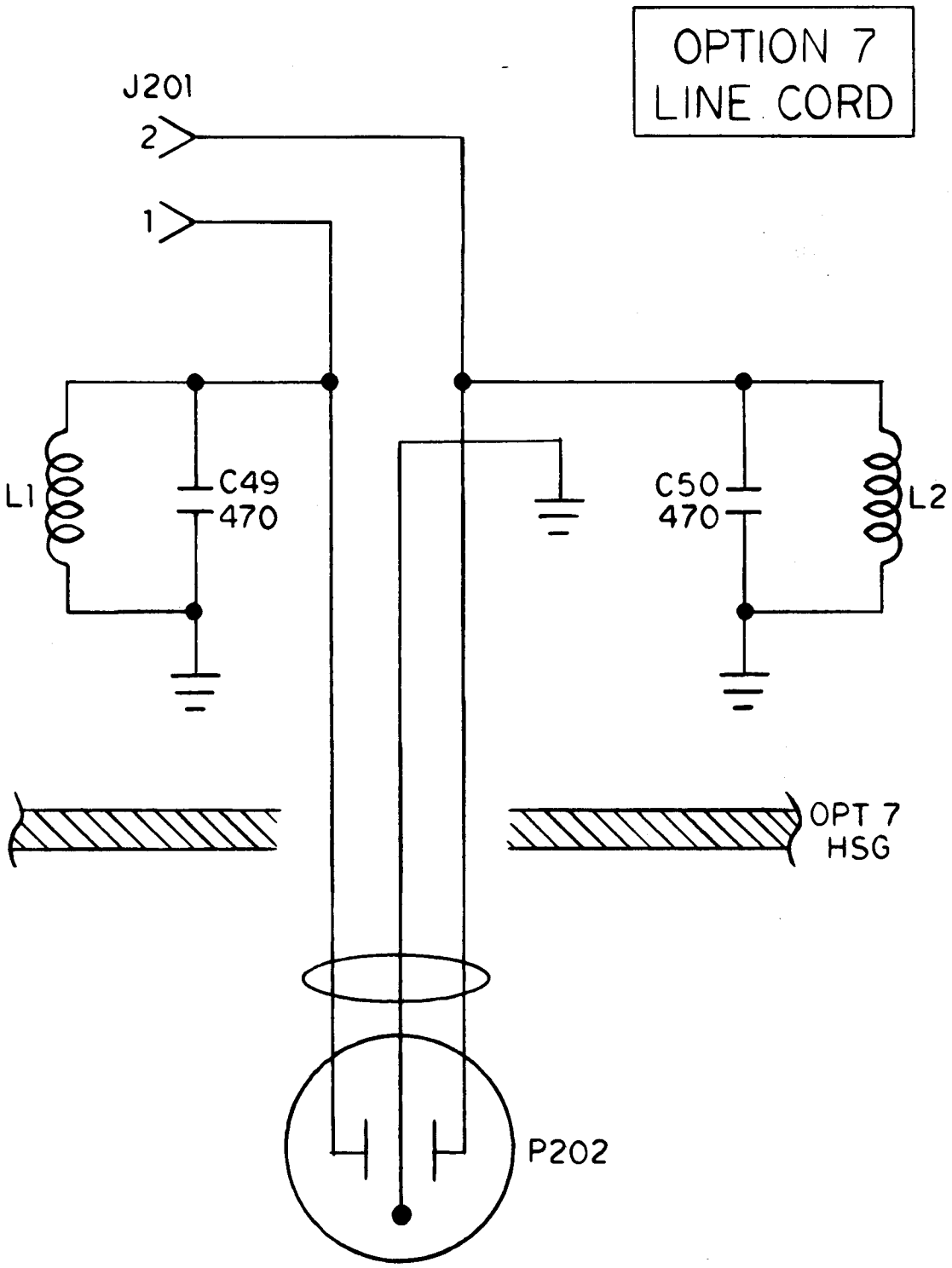
OPTION 7
LINE CORD
J201
2
1
L1
C49
470
C50
470
L2
OPT 7
HSG
P202

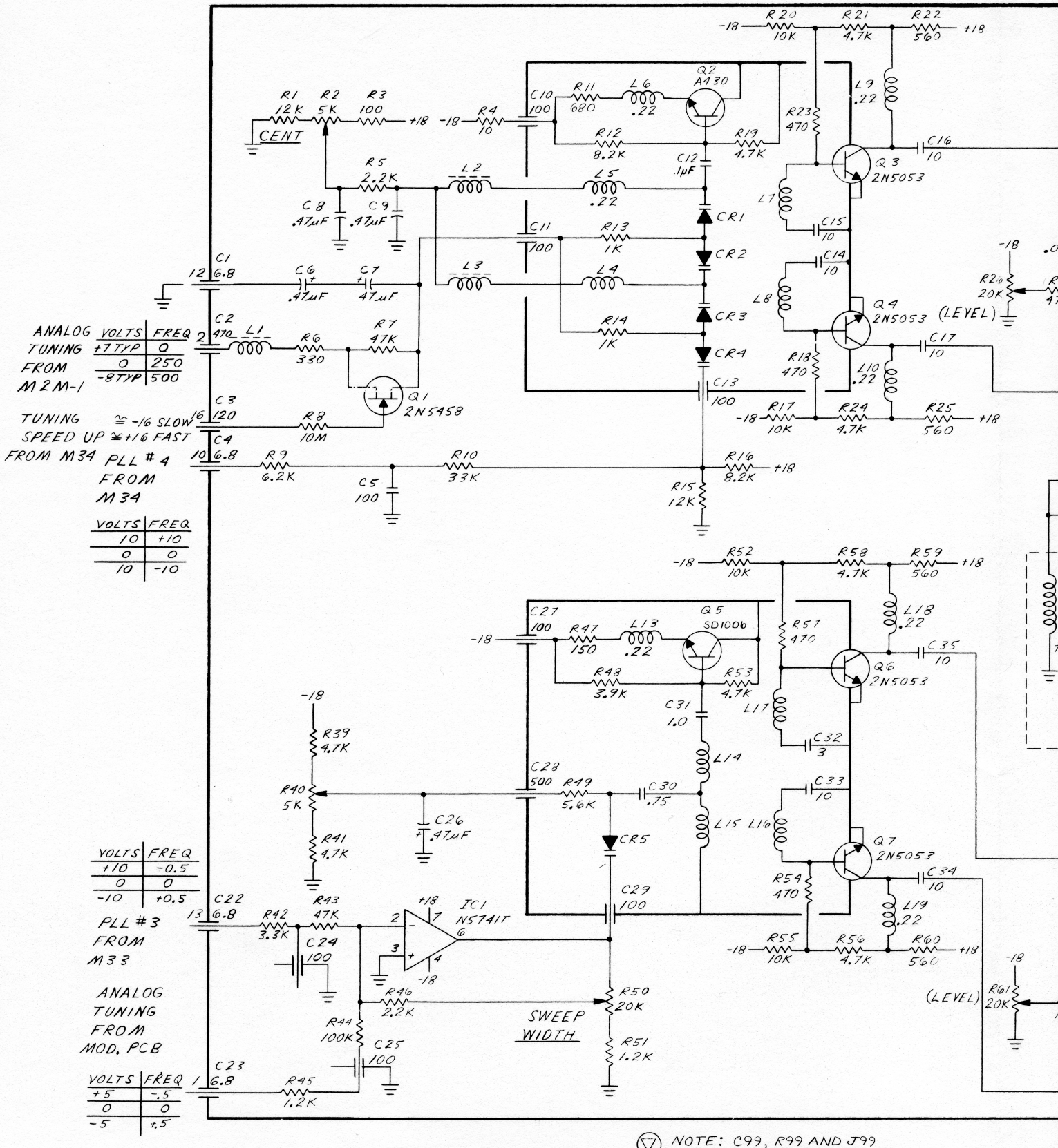
R20 10K
R21 4.7K
R22 560
-18
+18
Q2 A430
R1 12K
R2 5K
R3 100
CENT
R4 10
C10 100
R11 680
L6 .22
R12 8.2K
R19 4.7K
R23 470
L9 .22
C16 10
Q3 2N5053
R5 2.2K
L2
L5 .22
C12 .1μF
C8 .47μF
C9 .47μF
L7
C15 10
CR1
C11 100
R13 1K
CR2
L3
L4
C14 10
L8
Q4 2N5053
(LEVEL)
R26 20K
CR3
R14 1K
CR4
C17 10
R18 470
L10 .22
C13 100
R17 10K
R24 4.7K
R25 560
C1 6.8
C6 .47μF
C7 .47μF
C2 470
L1
R6 330
R7 47K
Q1 2N5458
ANALOG TUNING FROM M2M-1
VOLTS | FREQ
+7 TYP | 0
0 | 250
-8 TYP | 500
C3 120
R8 10M
TUNING ≅ -16 SLOW
SPEED UP ≅ +16 FAST
FROM M34 PLL #4 FROM M34
C4 6.8
R9 6.2K
R10 33K
C5 100
R15 12K
R16 8.2K
VOLTS | FREQ
10 | +10
0 | 0
10 | -10
R52 10K
R58 4.7K
R59 560
C27 100
R47 150
L13 .22
Q5 SD1006
R51 470
L18 .22
C35 10
Q6 2N5053
R48 3.9K
R53 4.7K
L17
C31 1.0
C32 3
R39 4.7K
L14
R40 5K
C28 500
R49 5.6K
C30 .75
C33 10
C26 .47μF
L15 L16
CR5
R41 4.7K
Q7 2N5053
VOLTS | FREQ
+10 | -0.5
0 | 0
-10 | +0.5
C22 6.8
R42 3.3K
R43 47K
C24 100
IC1 NS741T
C29 100
R54 470
C34 10
L19 .22
PLL #3 FROM M33
R55 10K
R56 4.7K
R60 560
R46 2.2K
R50 20K
SWEEP WIDTH
R61 20K
ANALOG TUNING FROM MOD. PCB
R44 100K
C25 100
R51 1.2K
VOLTS | FREQ
+5 | -.5
0 | 0
-5 | +.5
C23 6.8
R45 1.2K
NOTE: C99, R99 AND J99 USED ON M9W-3 ONLY

SCHEMATIC 12
WIDE SWEEP OSCILLATOR
1198 TO 1718 MHz
M9W-2/M9W-3

REV. E

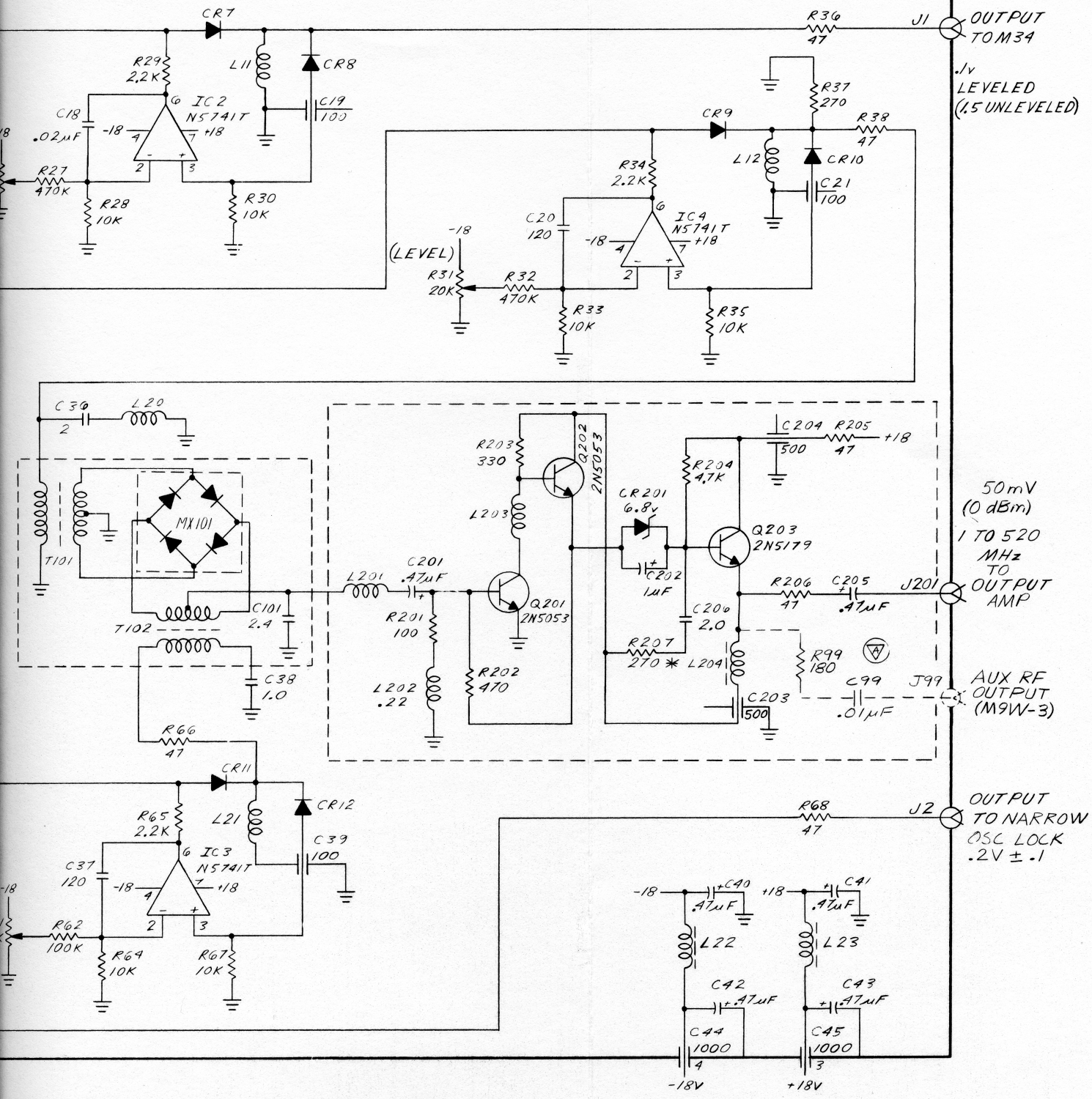

MANUAL CHANGES - MODEL 3000

Wavetek's product improvement program incorporates the latest electronic developments into these instruments as rapidly as development and testing permit. Due to the time required to document and print these instruction manuals, it is not always possible to include the changes in the original printing. The following schematics and drawings have been changed.

DPS2A has replaced DPS2; M10W-9 has replaced M10W; M29-2 has replaced M29-1; M31A has replaced M31; M32A has replaced M32; M41A-1 has replaced M41A. In all cases where the former assembly is mentioned in the manual text, the new assembly name should be understood. All specifications, adjustments, and procedures, have been updated in the manual text.

GENERAL Two gaskets are being installed under the M9W and M10W-9 modules to further reduce RFI radiation. The hold-down screws for these modules are 3/8" instead of 5/16" as for the other modules. The gasket material consists of nickel fibers imbedded in a silicone elastomer. Loose fibers may penetrate the skin or short out a chassis terminal; therefore use care when handling the gasket.

M35-1 R15 is now 1.8 kohm, W-I PN 4700-15-1801.

M41A-1 C17 is reversed on the schematic.

Rev A M34
11/15/84 M34 Schematic should indicate C13*.

Rev B M9W to M9W-7
11/14/85 The M9W-7 Sweep Oscillator module replaces the M9W module in the Model 3000 Signal Generators. The M9W-7 module uses a control circuit to automatically set the phased-locked loop voltage in PLL3 to zero. This eliminates the Pot "D" adjustment in the M9W module. Disregard the first paragraph of Section 5.3.7 in the manual, since there is no pot "D". The M9W-7 parts list and schematic replace the M9W documents may be found at the end of the Manual Changes.

Rev C 5.3.6 PHASE-LOCKED LOOP 2 ADJUSTMENT M32A
1/7/86 Revise the first paragraph beginning with line 3 to read:

Connect a digital voltmeter to M32A PIN 14. The DVM should read between +0.5 and +2.5 VDC. If the leveler voltage is within this range, DO NOT adjust the M30-# trimmer capacitors. (The dash number # depends upon the instrument model number.)

If the leveler voltage is not between +0.5 and +2.5 VDC, carefully adjust trimmers A and B on top of the M30-# until the voltage is correct.

CAUTION: If trimmers A and B are adjusted too far, the trimmer screws may fall down into the module. Misadjusted trimmers may cause faulty phase-locked loop 2 operation.

If the M32A leveler voltage cannot be correctly adjusted, proceed as follows. Disconnect the module cable W9 on the 1440 MHz output connector on the M30-#. This connector is next to the A trimmer. Connect the 1440 MHz output to the RF input of a spectrum analyzer, and note the 1440 MHz comb line amplitude. It should be -12 dBm or greater. The adjacent 1320 and 1560 MHz comb lines should be at least 20 dB below the 1440 MHz comb line. Adjust trimmers A and B only if the comb lines are not as stated above. Remove the spectrum analyzer input, and reconnect cable W9 to the 1440 MHz output connector.

Set the Leveler/Indicator switches to 239.000 MHz, and note that the DVM reading is still within the above limits.

If correct M30-# comb lines are obtained, and the M32A leveler is incorrect, the M32A module or cable W9 is faulty. If, after adjustment, the M30-# comb lines are incorrect, the M30-# is faulty. If replacement modules are available, they may be substituted to correct the fault. The M30-# must have the correct dash number.

Rev D
10/22/86
PIN 3469

A programmable attenuator (part number 1113-40-0144) will replace the rotary attenuator currently used in the Model 3000 Signal Generator. The following manual changes must be performed:

Section 6: Parts List 1010-00-0013, SGL GEN 3000:
Delete the line that starts with reference designator "14" and describes "Atten, 50130-01". This item is the rotary attenuator being replaced. The programmable attenuator will be listed as the "50130 Replacement" on the Chassis Assembly (part number 1111-00-0005) of the Model 3000. The parts list for the chassis assembly is shown below.

CHASSIS, 3000 1111-00-0005 REV. X

REFERENCE DESIGNATORS	PART DESCRIPTION	ORIG-MFGR-PART-NO	MFGR	WAVETEK NO.	QTY
AT01	50130 REPLACEMENT	5P130SS18	W-I	1113-40-0144	1.000
PS01	PWR SUPPLY,DPS2A	DPS2A	W-I	1115-00-0034	1.000
AZ18	CHAS PLATE ASSY	CHAS PLATE	W-I	1216-00-0030	1.000
ZA19	FP ASSY,3000	3000-FP	W-I	1216-00-0029	1.000

Section 5, Figure 5-6. Model 3000 Top View:
Item (16) is shown as the 50130-01 STEP ATTEN; Relabel this item the "Programmable Attenuator". (The new attenuator is smaller than the one shown but occupies the same relative position.)

Section 7, Model 3000 Wiring Diagram:
The block identified as "STEP ATTENUATOR 50130-1" should be relabeled "PROG ATTENUATOR AT01".

Meter Board, C315, Schematic:
Microswitch S1, shown as a block on this figure, has been incorporated into the programmable attenuator switch.

Section 8, OPTION 1B:
Figure 8/1B-2: The block identified as "50130-01 ATTEN" should be relabeled "PROG ATTEN AT01".

Figure 8/1B-3: The comments about Figure 5-6, above, (Model 3000 Top View) apply here also.

Section 8, OPTION 3:
Figure 8/3-2: The block labeled "STEP ATTENUATOR 50130-1" (below the figure) should be relabeled "PROGRAMMABLE ATTENUATOR".

Rev E
3/27/87
PIN 3783

M31A to M31B

The M31A is now obsolete. This module has been replaced with the M31B. Replace all text references to the "M31A" with "M31B".

On the M31A schematic (Wavetek number 0014-40-0061) change IC7 from 74H102 to 74LS112, IC8 from 74H11 to 74LS11, and IC10A and 10B from 4558 to TL082. Add a 100 Ω resistor (R32) between pin 4 of IC10B and the -18 volt supply. Add a 100 Ω resistor (R31) between pin 8 of IC10A and the +18 volt supply.

On the parts list titled PC Assy, M31A, assembly number 1114-00-0143, make the following corrections:

1. Replace the line beginning "IC07" with the following line:
   "IC07; DUAL J-K NEG; SN74LS112AN; T-I; 8007-41-1210; 1"

2. Replace the line beginning "IC08" with the following line:
   "IC08; TRIPLE POS AND; SN74LS11N; T-I; 8000-74-1110; 1"

3. Replace the line beginning with "IC10" with the following line:
   "IC10; DUAL OP AMP; TL082CP; T-I; 7000-00-8200; 1"

4. Add the following line:
   "R31 R32; RES, C, 1/4W, 5%, 100; CF 1/4-100; ASE; 4700-15-1000; 2"

Section 4.5, OUTPUT LEVEL ACCURACY TESTS:
Change the third paragraph of the METHOD section to read "The flatness is measured in 10 MHz steps between 10 and 520 MHz at +12, +3, and -7 dBm output levels."

Replace the table shown with the following table:

OUTPUT STEP ATTENUATOR POSITION	ACTIVE STEP ATTENUATOR PADS (X)				
dBm	10 dB	20 dB	30 dB	35 dB	35 dB
+ 10					
0					
- 10	x				
- 20		x			
- 30			x		
- 40	x		x		
- 50		x	x		
- 60	x	x	x		
- 70				x	x
- 80	x			x	x
- 90		x		x	x
-100			x	x	x
-110	x		x	x	x
-120		x	x	x	x
-130	x	x	x	x	x

Change the last paragraph in the METHOD section as follows:
The third sentence in the paragraph must read "The two 35 dB pads are measured in combination with other pads."

Section 4.5.2, FLATNESS TEST:
Make the following changes in Steps 1, 4, 5, and 7 of the PROCEDURE section:
Step 1. Delete the line:
"FREQUENCY selector 050.000 MHz"

Step 4. Replace the paragraph with the following:
Set the Signal Generator Frequency selector to read 10 MHz and step in 10 MHz steps between 10 and 520 MHz. Observe the change in power meter readings. The total deviation shall be not greater than 1.5 dB overall. Record the maximum change to the nearest .05 dB (1/4 division) on line 9 of the PTR.

Step 5. Change to read:
"Set the OUTPUT VERNIER for a +3 dBm power meter reading."

Step 7. Change the first sentence to read:
"Set the OUTPUT step attenuator to 0 dBm."